

Standard Parts

FIBRO

All products are registered in ...



FIBRO
Standard Parts Webshop
www.fibro.com
www.normalien-webshop.de
www.standard-parts-webshop.de

New and improved products in the FIBRO Standard Parts catalogue 2014



2130.03.
Screw-in lifter stud with cable securing device
C12



2130.13.
Lifter stud with cable securing device, with welded disc
C14



2132.10.55.
Die lifting bolt with safety ring and spring, to VW standard
C30



2192.90.
Screw plug
C47



2022.16.48.
Guide pillar with groove
D59



2051.92.
Guide bush „ECO-LINE“, bronzeplated, ISO 9448-2
D97



2051.72.
Guide bush „ECO-LINE“, Bronze with solid lubrication rings, ISO 9448-2
D98



2060.61.
Ball cage with circlip groove, Aluminium
D103



2060.63.
Ball cage with assembly aid, Aluminium
D105



2060.65.
Ball cage with circlip and fastening ring groove, Aluminium
D107



2081.68.
Headed guide bush with ball cage retainer
D109



2091.68.
Flanged guide bush with ball cage retainer
D111



2091.91./ 92./94.
Flanged guide bush „ECO-LINE“, bronze plated, ISO 9448-4
D137-D139



2961.82.
Retaining plate, Steel with solid lubricant, NAAMS
D181



2960.30.
Sliding pad, Steel with sinterlayer, VDI 3357
D190



2960.88.
Sliding pad, Steel, VDI 3357
D212



2960.93.
Sliding pad, Bronze with solid lubricant, VDI 3357
D214



2960.73.
Guide bracket, Steel with solid lubricant, VDI 3387
D222



2960.90.
Overrun cam, Steel, hardened, VDI 3357
D225



2960.91.
Overrun cam, Steel, hardened and gas nitrided, VDI 3357
D226



2960.92.
Overrun cam, Bronze with solid lubricant, VDI 3357
D227



2962.73.
Angled guide gib, Bronze with solid lubricant
D232



2445.10.
Centring pin
D263



2072.46.30.
Screw clamp with screw, GM Standard
D275



2443.10.
Guide
D279



2443.10.20.
Guide to Mercedes-Benz Standard, unhardened
D280



2443.10.20. .1
Guide to Mercedes-Benz Standard, hardened
D281



244.10.15.
Stop Washer
F75



2533.10.
Spacer for die release
F93



2533.20.
Spacer for die release
F94



2533.00.01.
Hinge for spacer
F95



2478.30. .3
Stripper
F127



2478.20.20.3
Damper for lifting units to Mercedes-Benz Standard
F132



2478.20.20.4

Spacer sleeve for lifting units to Mercedes-Benz Standard

F133



2480.051. 03.00030

Clamping flange

F164



2482.74. .2

Gas spring, small dimension and low force

F164



2480.13.00250.

Gas spring, Standard

F174



2480.044.03.

Flange to VDI 3003

F174-F306, L76-L80



2480.13.00500.

Gas spring, Standard

F176



2480.011. 10000.2

Flange plate

F188, F234



2480.057. 03.01000

Square collar flange

F224, F246



2490.14.

Compact gas spring

F238-F255



2486.22.

Gas spring DS

F282-F287



2480.00.54.10

Hose press, pneumatic

F371



2450.10A.

Damper, light duty

G22



2450.11B.

Damper, light duty

G23



2450.20A./ 20B.

Damper, heavy duty

G24-G25



2451.10D.

Damper stopper

G26



280.822405

Release agent FIBROLIT® TW

H14



2198.50.55.04

Spring mounted roller to VW Standard

J13

A Die Sets

Cast iron, steel and aluminium die set press units
Lamination die set units, tooling pallet die sets

B Precision Ground Plates and Flat Bars

C Lifting and Clamping Devices

D Guide elements

E Ground Precision Components

F Springs

G Elastomer-Bars, -Sheets, -Sections

H FIBRO Chemical Tooling Aids

J Peripheral Equipment

K Cam Units

L Standard Parts for Mould Making

FIBRO - your production partner

FIBRO – an internationally successful company.

As a market leader in Standard Parts, Rotary Indexing Tables and Automation, FIBRO provides products and solutions to ensure your production keeps moving.

So what is the secret of the FIBRO success? Products developed in-house, tailor-made for the market with uncompromising quality.

But good products are not enough on their own.

FIBRO combines excellent products, the know-how and service competence of an internationally focused company, matched to the actual needs of customers - wherever they are.



Hassmersheim plant



Standard Parts

Today the Standard Parts Division operates from the Hassmersheim and Weinsberg works, which manufacture a comprehensive range of standard parts and maintain stocks ready for immediate despatch world-wide.
The machine tool, mechanical engineering and systems engineering product ranges have been developed to meet the needs of customers.

They include steel die sets, guide elements, oilless guide elements and precision components such as punches and matrixes, special steel compression springs, gas springs, forming materials, metal bonding agents, moulding resins, peripheral equipment for pressing and tool making, tool slides with cam or roller slides and hydraulic cam systems.

FIBRO has become renowned world-wide for its comprehensive range of products in stock and its readiness to deliver.

FIBRO is customer-focused – world-wide. A well-developed network of sales and service points and strategic partners ensure that help is always at hand. This ensures technical advance, world-wide experience in applications and rapid availability of products.

Facts and figures on FIBRO:
- founded 1958
- approximately 770 staff
- more than 70 representatives and service stations world-wide
- branches in France, USA, India, Switzerland, Singapore and China
- ISO 9001:2000 Quality Assurance and VDA 6.4 certification



Manufacturing of precision parts



Rotary Tables

FIBRO – The worldwide pioneer in the field of rotary tables

A comprehensive range of types:

FIBROPLAN®	*– NC rotary table with worm drive*
FIBRODYN®	*– NC rotary table with direct torque drive*
FIBROMAX®	*– Heavy-duty NC rotary table with Twin Drive*
FIBROTAKT®	*– Rotary indexing table with Hirth face gear*
FIBROTOR®	*– Electromechanical rotary indexing table for applications that do not involve machining*

Rotary tables for all applications – from flexible workpiece positioning through rotary and multiple-axis machining to assembly automation

Used in all branches of industry – from the automobile industry through solar energy to machine tools

A wide range of sizes – from micro-machining to processing of very large parts

Customer-oriented design – from the standard modular table to customer-specific special solutions

Vertretungen
Representatives
Représentations
Rappresentantes
Representaciones
Przedstawicielstwa
Zastoupení
Mümessiller
代表处

FIBRO

info@fibro.de · www.fibro.com

Geschäftsbereich Normalien
Business Area Standard Parts
Département Eléments normalisés
Settore commerciale Normalizzati
Sector Empresarial Elementos Normalizados
Części znormalizowane
Obchodní oddělení normovaných dílů
İş Alanı Standart Kalıp Elemanları
标准件事业部

Postfach 1120 · 74851 Hassmersheim
August-Läpple-Weg · 74855 Hassmersheim
T +49 6266 73-0*· F +49 6266 73-237

DE

Außendienst Andreas Otto
Immenweg 3 · 16356 Ahrensfelde OT Eiche
T +49 30 423 97 15 · M +49 170 739 00 64
a.otto@fibro.de
PLZ 10000-19000

Walter Ruff GmbH
Heerenholz 9 · 28307 Bremen
T +49 421 43878 0 · F +49 421 43878 22
mail@praeziruff.de · www.praeziruff.de
PLZ 20000-28000, 49000

Außendienst Jörg Dyck
Walter Ruff GmbH
Postfach 450118 · 28295 Bremen
T +49 421 43878 0 · F +49 421 43878 22
M +49 173 9252243 · mail@praeziruff.de
PLZ 29000-31000, 37000-39000

Außendienst Dirk Bechinka
Neuer Kamp 74 · 32584 Löhne
M +49 170 5760009 · d.bechinka@fibro.de
PLZ 32000-34000, 48000, 49000

Außendienst Ralf Feldmann
Wiesenstraße 23b · 58339 Breckerfeld
M +49 151 12590159 · r.feldmann@fibro.de
PLZ 35000-36000, 57000, 60000, 61000, 65000

Außendienst Lars Jahncke
Locher Straße 44 · 42719 Solingen
T +49 212 2543462 · F +49 212 2543390
M +49 170 7637125 · l.jahncke@fibro.de
PLZ 42000, 44000-46000, 58000-59000

Außendienst Hartwig Hennemann
Staubenthaler Höhe 79 · 42369 Wuppertal
T +49 202 283 17 56 · F +49 202 759 55 80
M +49 175 29 659 30
h.hennemann@fibro.de
PLZ 40000-41000, 42000, 47000, 50000-53000,

Außendienst Oliver Koop
Burgstraße 14 · 66780 Rehlingen-Siersburg
T +49 6835 923 28 10 · F +49 6835 608 59 09
M +49 175 438 53 81 · o.koop@fibro.de
PLZ 54000-55000, 56000, 66000

Außendienst Matthias Ehrenfried
Steigerwaldstraße 25 · 74172 Neckarsulm
T +49 7132 34 56 90 · F +49 7132 98 94 82
M +49 171 864 95 52
m.ehrenfried@fibro.de
PLZ 71000, 74000, 75000, 97000

Außendienst Manfred Wagner
Breslauer Straße 57 · 74372 Sersheim
T +49 7042 350 86 · F +49 7042 37 48 20
M +49 170 563 52 30
m.wagner@fibro.de
PLZ 70000, 71000, 72000, 73000, 88000, 89000

Außendienst Markus Rössl
Johann-Strauß-Straße 16/1
74906 Bad Rappenau
T +49 7264 20 64 17 · F +49 7264 20 64 18
M +49 160 97 25 23 93
m.roessl@fibro.de
PLZ 63000, 64000, 67000, 68000, 69000, 76000, 77000

Außendienst Matthias Jörg
In der Krautbündt 44
77656 Offenburg-Zunsweile
M +49 151 21 28 25 00 · m.joerg@fibro.de
PLZ 72000, 77000, 78000-79000, 88000

Jugard + Künstner GmbH
Landsberger Straße 289 · 80687 München
T +49 89 546 15 60 · F +49 89 580 27 96
muc@jugard-kuenstner.de
www.jugard-kuenstner.de
PLZ 80000-87000, 88000, 89000

Jugard + Künstner GmbH
Weidentalstraße 4 · 90518 Altdorf bei Nürnberg
T +49 9187 936 69-0 · F +49 9187 936 69-90
nbg@jugard-kuenstner.de
www.jugard-kuenstner.de
PLZ 90000-96000, 97000

HELD Werkzeugmaschinen
Präzisionswerkzeuge GmbH
Sorge 34 · 07545 Gera
T +49 365 824 91 0 · F +49 365 824 91 11
info@held-wzm.de · www.held-wzm.de
PLZ 01000-09000, 98000-99000

AT Rath & Co. Ges. m.b.H.
Teiritzstrasse 3 · 2100 Korneuburg
T +43 2262 608 0 · F +43 2262 608 60
office@rath-co.at · www.rath-co.at

AU Bruderer Presses Australia Pty. Ltd.
92 Trafalgar Street · Annandale, NSW 2038
T +61 419 400 995 · F +61 296 864 809
Brudsyd@tpgi.com.au

BA Oro-Tech trgovina d.o.o.
Ulica borcev 1/b · SI-2000 Maribor
T +386 2 426 08 43 · F +386 2 426 08 44
oro-tech.trgovina@siol.net

BE Schiltz S.A.
Chaussee de Gand 1034 · 1082 Bruxelles
T +32 2 464 4830 · F +32 2 464 4839
info@schiltz.be · www.schiltz-norms.be

BG Bavaria 2002 EOOD
Patriarh Evtimii 10
5100 Gorna Orjachoviza
T +359 618 64158 · F +359 618 64960
bavaria2002@gorna.net
www.bavaria2002.hit.bg

BR Industécnica Equipamentos
Industriais Ltda.
R. Olívia Guedes Penteado 759
04766-001 São Paulo
T +55 11 5548 4333 · F +55 11 5522 4400
industecnica@fixo.com.br
www.industecnica.com.br

CH Außendienst David Lindauer
Sportplatzweg 10 · 6440 Brunnen
M +41 76 4173 239
d.lindauer@fibro.de · www.fibro.com

Brütsch/Rüegger Werkzeuge AG
Heinrich-Stutz-Strasse 20 · 8902 Urdorf
T +41 44 736 63 63 · F +41 44 736 63 00
info@brw.ch · www.brw.ch

CL Bermat S.A.
Coyancura 2283, Of. 601
Casilla 9781 · Santiago
T +56 2 231 88 77 · F +56 2 231 42 94
bermat@bermat.cl · www.bermat.cl

CN FIBRO (Shanghai) Standard Parts Co., Ltd.
1st Floor, Building 3, No. 253, Ai Du Road
Pilot Free Trade Zone, Shanghai 200131
T +86 21 6083 1589 · F +86 21 6083 1599
info@fibro.cn · www.fibro.cn

Jilin Province Feibo Tooling Standard Parts Co., Ltd.
Add: Room303, No. 5470, Xi'an Avenue, Luyuan District, Changchun City, Jilin Province
T +86 431 8120 3792 · F +86 431 8120 3792
feibomuju@sina.cn · www.fibro.com

Shenzhen Poleda Investment Co.,Ltd.
Add: 4/F, SED Technology Tower,
No.1 Keji Road, Hi-tech Industrial Park,
Nanshan District, Shenzhen
T +86 755 2398 5026/2398 5029
F +86 755 2398 5596
anson@poleda.cn · www.fibro.com

CY Militos Trading Ltd.
K. Erotokritou & A. Demetriou Ltd.
P.O.B. 27297 · 1643 Nicosia
T +357 2 75 12 56 · F +357 2 75 22 11
militos@cytanet.com.cy

VVB2-1 · 10/2015

CZ **Gore, s.r.o.**
Košínova 3090/29a · 61200 Brno - Kralovo Pole
T +42 541 219 607 · F +42 541 219 606
obchod@gore.cz · www.gore.cz

DK **EBI A/S**
Metalbuen 28 · Postbox 79 · 2750 Ballerup
T +45 4497 8111 · F +45 4468 0626
ebi@ebi.dk · www.ebi.dk

DZ **Pneumacoupe Blida Boufarik**
86 Bld. Menad Mohamed
Boufarik, 09400 Blida
T +213 347 5655 · F +213 347 5655
pneumacoupe@yahoo.fr

EE **CLE Baltic Oû**
Sära street 10 · Peetri village
Rae county · 75312 Estonia
T +372 780 3530 · F +372 668 8679
roland.rebane@clegroup.com ·
www.clebaltic.com

EG **Smeco**
68, Abdel Rahman El Raffei St.
11351-Heliopolis West, Cairo
T +20 2 620 06 71 · F +20 2 620 06 74
r.metwally@tedata.net.eg

ES **Daunert Máquinas-Herramientas, S. A.**
c/. Tirso de Molina s/n Esquina
c/. Albert Einstein
Polígono Industrial Almeda
08940 Cornellá de Llobregat · Barcelona
T +34 93 475 1480 · F +34 93 377 6464
info@daunert.com · www.daunert.com

FI **CLE**
Trollbergintie 10 · 10650 Tammisaari
T +358 2075 19-600 · F +358 2075 19-619
info@cle.fi · www.cle.fi

FR **FIBRO France Sarl**
26, avenue de l'Europe · 67300 Schiltigheim
T +33 3 90 20 40 40 · F +33 3 88 81 08 29
info@fibro.fr · www.fibro.com

GB **Bruderer UK Ltd.**
Unit H, Cradock Road
Luton · Bedfordshire LU4 0JF
T +44 1582 563 400 · F +44 1582 493 993
mail@bruderer.co.uk · www.bruderer-presses.com

GR **Konstantinos Koutseris & Co. - MEK**
Pyloy 100 · 10441 Athen
T +30 210 5220557 · F +30 210 5221208
info@mek.com.gr · www.mek.com.gr

HK **Forsteppe Asia Ltd.**
Unit 207, 2/F
Shing Chuen Industrial Building
25-27 Shing Wan Road
Tai Wai, Shatin, N. T., Hong Kong
T +852 26 01 13 68 · F +852 26 01 16 38
annie.li@forsteppe.com · www.forsteppe.com

HR **WML Robert Bednjanec**
Vlaska 76 · 10000 Zagreb
T +385 984 16005
robert.bednjanec@net.hr

HU **Rath & Co. Ges. m.b.H.**
Teiritzstraße 3 · AT-2100 Korneuburg
T +43 2 262 608 0 · F +43 2 262 608 60
office@rath-co.at · www.rath-co.at

ID **FIBRO Asia Pte. Ltd.**
9, Changi South Street 3, #07-04
Singapore 486361
T +65 65 43 99 63 · F +65 65 43 99 62
info@fibro-asia.com · www.fibro.com

IE **Bruderer UK Ltd.**
Unit H, Cradock Road
Luton · Bedfordshire LU4 0JF
T +44 1582 563 400 · F +44 1582 493 993
mail@bruderer.co.uk · www.bruderer-presses.com

IL **A. J. Englander 1980 Ltd.**
13 Harechev Street · Tel Aviv 67771
T +972 3 537 36 36 · F +972 3 537 33 25
info@englander.co.il · www.englander.co.il

IN **FIBRO INDIA PRECISION PRODUCTS PVT. LTD.**
Plot No: A-55, Phase II, Chakan MIDC
Taluka Khed, Pune - 410 501
T +91-2135 67 09 03 · M +91-98810 00273
info@fibro-india.com · www.fibro.com

IR **Eximrad Co.**
268 Dr. Mofatah Ave. · Tehran 15848
T +98 21 8882 12 3 · F +98 21 8830 9778
eximrad@yahoo.com

IT **Millutensil S.R.L.**
Corso Buenos Aires, 92 · 20124 Milano
T +39 02 2940 4390 · F +39 02 204 6677
info@millutensil.com · www.millutensil.com

KR **FIBRO Korea Co. Ltd.**
Namdongsanggong Bd. 401ho
632-1, Gojan-Dong, Namdong-Gu
Incheon, Korea (zip code 405-817)
T +82 32 821 0131 · F +82 32 821 0030
fibro@chol.com · www.fibro.com

LI **Außendienst David Lindauer**
Sportplatzweg 10 · 6440 Brunnen
M +41 76 4173 239
d.lindauer@fibro.de · www.fibro.com

LT **Cle Baltic Oû**
Pramones gatve 94-7 · 11115 Vilnius, Lithuania
T +370 663 56309 · F +370 520 40914
info@clebaltic.com · www.clebaltic.com

LV **Cle Baltic Oû**
Starta iela 6b · 1026 Riga, Latvia
T +371 671 39991· F +371 671 39992
info@clebaltic.com · www.clebaltic.com

MA **Chiba Industrie**
Bd. Mohamed Bouziane Lot 96
Hay My Rachid · Casablanca
T +212 22 72 69 89 · F +212 22 72 69 83
chibaindustrie@menara.ma

MY **FIBRO Asia Pte. Ltd.**
9, Changi South Street 3, #07-04
Singapore 486361
T +65 65 43 99 63 · F +65 65 43 99 62
info@fibro-asia.com · www.fibro.com

NL **Jeveka B.V.**
Platinaweg 4 · 1362 JL Almere Poort
T +31 36 303 2000
info@jeveka.com · www.jeveka.com

NZ **APS Tooling Ltd.**
17A Spring Street · Onehunga, Auckland, 1061
T +64 9 579 2208 · F +64 9 579 2207
info@apstools.co.nz

PE **Ing. E. Brammertz S.c.r.l.**
Av. José Pardo 182 · 0F. 905
Apartado 0173 · Miraflores, Lima 18
T +51 1 445 81 78 · F +51 1 445 19 31
braming@terra.com.pe

PL **Przedstawiciel Piotr Kaszuba**
ul. Lwa Tołstoja 14/5 · 56-400 Oleśnica
T +48 71 398 53 08 · F +48 71 398 53 08
M +48 609 987 285
p.kaszuba@fibro.de · www.fibro.com

Przedstawiciel Marcin Piętka
Roczyny, ul. Bielska 8 · 34-120 Andrychow
T +48 33 813 72 13 · M +48 605 987 284
m.pietka@fibro.de · www.fibro.com

Doradztwo Techniczne Michał Gadomski
Suchatowka 8 · 88-140 Gniewkowo
M +48 609 987 247
m.gadomski@fibro.de · www.fibro.com

PT **Ferrometal Lda.**
Estrada Manuel Correia Lopes
Parque Industrial Progresso, Armazém 1 · Polima
2785-001 S. Domingos de Rana
T +351 214 447 160 · F +351 214 447 169
ferrometal@ferrometal.pt

RO **Reprezentant Vânzari Daniel Andrei Sibisan**
Str. Zizinului nr. 8, ap. 21 · Brasov, 500414
T +40 744 44 05 83 · F +40 368 78 00 08
d.sibisan@fibro.de · www.fibro.com

RS **Andrija Tesic, Dipl. Ing.**
Partisanska 12/a-II · 11090 Beograd
T +381 11 2338 362 · F +381 11 2338 362
atesic@verat.net

RU **CL Engineering & Co. Ltd.**
ul. Sofyiskaya 66 · 192289 S. Petersburg
T +7 812 575 1592 · F +7 812 324 7388
info@cleru.ru · www.cleru.ru

OOO VTF Instrumsnab
ul. Topolinaya 9A · 445047 Togliatti
T +7 8482681424 · F +7 8482681452
office@instrumsnab.ru · www.instrumsnab.ru

SA **Al Rasha Est**
Old Makkah Road - Kilo 3 · Dar Al Oloum Street
P. O. Box 130029 · Jeddah 21372
T +966 12 645 85 41 · F +966 12 645 85 39
fibro.sa@gmail.com · www.al-rasha.com

SE **Lideco AB**
Verkstadsvägen 4 · 51463 Dalstorp
T +46 321 53 03 50 · F +46 321 603 77
info@lideco.se · www.lideco.se

SG **FIBRO Asia Pte. Ltd.**
9, Changi South Street 3, #07-04
Singapore 486361
T +65 65 43 99 63 · F +65 65 43 99 62
info@fibro-asia.com · www.fibro.com

SI **Oro-Tech trgovina d.o.o.**
Ulica borcev 1/b · SI-2000 Maribor
T +386 2 426 08 43 · F +386 2 426 08 44
oro-tech.trgovina@siol.net

SK **Technicky konzultant Vladimir Tanecká**
CSA 89/8 · 96223 Ocova
M +421 905 32 94 56
v.tanecka@fibro.de · www.fibro.com

TH **LuBo (Thailand) Co., Ltd.**
777 Moo 15 Soi Thai Prakarn 2
Theparak Road km. 21
Bangsaothong, Samut Prakarn 10540
T +66 2 317 6226 · F +66 2 317 6224
sale@luboasia.com · www.luboasia.com

TR **Ender Kesici ve Teknik Takimlar Sanayi Ticaret A.S.**
Tersane Caddesi No. 105
34420 Karaköy/Istanbul
T +90 212 253 2600 · F +90 212 254 5791
info@enderltd.com · www.enderltd.com

TW **SunNan Enterprises Co. Ltd.**
2F, No. 7, Alley 6, Lane 235 · Pao-Chiao Road
Hsin-Tien City · Taipei
T +886 22917 6454 · F +886 22911 0398
sun-ss@umail.hinet.net

US **FIBRO Inc.**
139 Harrison Ave. · Rockford, IL 61104
P. O. B. 5924 · Rockford, IL 61125
T +1 815 229 1300 · F +1 815 229 1303
info@fibroinc.com · www.fibro.com

ZA **Herrmann & Herrmann Pty. Ltd.**
24, Shaft Road · P. O. B. 13030
Knights 1413
T +27 11 828 01 00 · F +27 11 828 60 21
hermstools@mweb.co.za · www.hermstools.com

FIBRO

Index

24°-cone-threaded Joint F344-346
Accessories for punches E181
Accessories for Retainers, triangular, for Ball-Lock Punches E174
Accessories for retainers, triangular, for punches ISO 8020 E180
ACCU-LOCK Fixture device for ball-lock punches, heavy duty E176
ACCU-LOCK Fixture device for ball-lock punches, light duty E175
Adjusting washer D258, L11
Adjusting washer, CNOMO D260-262
Air springs to VW standard F319
Aligning- and tryout press unit A59
Aluminium plate ~ISO 6753-1 A39, B7
Anaerobic metal adhesives for securing of screws and bearing bushes H10
Angled guide gib, Bronze with solid lubricant D228-235
Angled guide gib, Bronze with solid lubricant, CNOMO D229
Anti-rotation element E121-141
Assembling cone F369
Assembly Arrangenment of Gas Springs in Servial Connection Compression Fitting F343
Ball bearing guide, complete L29
Ball bearing guides - Loading Diagram D286
Ball bearing guides - Tables of dynamic load indexes D287
Ball bearing insert with collar J8
Ball bearing insert without collar J8
Ball bearing rail J9
Ball cage with assembly aid, Aluminium D105
Ball cage with assembly aid, Brass D104
Ball cage with circlip and fastening ring groove, Aluminium D107
Ball cage with circlip and fastening ring groove, Brass D106
Ball cage with circlip groove, Aluminium D103
Ball cage with circlip groove, Brass D102
Ball cage, plastic, for highest stroking speed D71
Ball cage, small dimension D26
Ball guide unit to Mercedes-Benz Standard D67
Ball lock pilot pin, with parabolic tip, heavy duty E98
Ball lock pilot pin, with parabolic tip, light duty E72
Ball lock pilot pin, with tapered tip, heavy duty E97
Ball lock pilot pin, with tapered tip, light duty E71
Ball lock punch, blank, heavy duty E73
Ball lock punch, blank, light duty E47
Ball lock punch, blank, with ejector pin, heavy duty E79
Ball lock punch, blank, with ejector pin, light duty E53
Ball lock punch, punch larger than shaft, blank, heavy duty E85
Ball lock punch, punch larger than shaft, blank, light duty E59
Ball lock punch, punch larger than shaft, blank, with ejector pin, heavy duty E91
Ball lock punch, punch larger than shaft, blank, with ejector pin, light duty E65
Ball lock punch, punch larger than shaft, rectangle with radiussed corners, heavy duty E90
Ball lock punch, punch larger than shaft, rectangle with radiussed corners, light duty E64
Ball lock punch, punch larger than shaft, rectangle with radiussed corners, with ejector pin, heavy duty E96
Ball lock punch, punch larger than shaft, rectangle with radiussed corners, with ejector pin, light duty E70
Ball lock punch, punch larger than shaft, rectangular, heavy duty E88
Ball lock punch, punch larger than shaft, rectangular, light duty E62
Ball lock punch, punch larger than shaft, rectangular, with ejector pin, heavy duty E94
Ball lock punch, punch larger than shaft, rectangular, with ejector pin, light duty E68
Ball lock punch, punch larger than shaft, round, heavy duty E86
Ball lock punch, punch larger than shaft, round, light duty E60
Ball lock punch, punch larger than shaft, round, with ejector pin, heavy duty E92
Ball lock punch, punch larger than shaft, round, with ejector pin, light duty E66
Ball lock punch, punch larger than shaft, slot, heavy duty E89
Ball lock punch, punch larger than shaft, slot, light duty E63
Ball lock punch, punch larger than shaft, slot, with ejector pin, heavy duty E95
Ball lock punch, punch larger than shaft, slot, with ejector pin, light duty E69
Ball lock punch, punch larger than shaft, square, heavy duty E87
Ball lock punch, punch larger than shaft, square, light duty E61
Ball lock punch, punch larger than shaft, square, with ejector pin, heavy duty E93
Ball lock punch, punch larger than shaft, square, with ejector pin, light duty E67
Ball lock punch, stepped, rectangle with radiussed corners, heavy duty E78
Ball lock punch, stepped, rectangle with radiussed corners, light duty E52
Ball lock punch, stepped, rectangle with radiussed corners, with ejector pin, heavy duty E84
Ball lock punch, stepped, rectangle with radiussed corners, with ejector pin, light duty E58
Ball lock punch, stepped, rectangular, heavy duty E76
Ball lock punch, stepped, rectangular, light duty E50
Ball lock punch, stepped, rectangular, with ejector pin, heavy duty E82
Ball lock punch, stepped, rectangular, with ejector pin, light duty E56
Ball lock punch, stepped, round, heavy duty E74
Ball lock punch, stepped, round, light duty E48
Ball lock punch, stepped, round, with ejector pin, heavy duty E80
Ball lock punch, stepped, round, with ejector pin, light duty E54
Ball lock punch, stepped, slot, heavy duty E77
Ball lock punch, stepped, slot, light duty E51
Ball lock punch, stepped, slot, with ejector pin, heavy duty E83
Ball lock punch, stepped, slot, with ejector pin, light duty E57
Ball lock punch, stepped, square, heavy duty E75
Ball lock punch, stepped, square, light duty E49
Ball lock punch, stepped, square, with ejector pin, heavy duty E81
Ball lock punch, stepped, square, with ejector pin, light duty E55
Blanking and forming with FIBROFLEX®-Elastomers G31-37
Bolster insert plate A58
Bolt guide L42
Bolt-on die set shank, ~DIN ISO 10242-2 C9
Bush for die lifting bolt C32
Cable - straight D285
Cable , 90° connector D285
Cage retainers D269-271
Cam slide units KBV 1 K6
Cam slide units KBV 2 K7
Centering unit D257
Centering unit with adjusting washer D256
Centring pin D263
Centring pin to Mercedes-Benz standard D264
Centring sleeve L13

Index

Centring unit L10
Centring unit, CNOMO D259-261
Centring unit, flat L10
Circlip DIN 471 D113
Clamp, forked shape, DIN 6315-B C34
Clamp, goose neck shape, DIN 6316 C37
Clamp, goose neck shape, with setscrew C37
Clamp, straight, DIN 6314 C36
Clamp, straight, with setscrew C36
Clamping claw, goose-neck shape C34
Clamping claw, infinitely variable C35
Clamping flange with retaining ring, ~AFNOR D53
Clamping tool set C50-51
Cleaner H11
Compact gas spring F237-255
Compact Nitrogen Booster F364-365
Comparative graphs E15
Compression Fitting – Compound Threaded Joints F341-342
Compression Pad F90
Compression spring set screw F89
Concertina shroud for gas springs F328-329
Concertina shroud with spacer bush D265
Concertina shroud with spacer tube D267
Connecting hose with 24° cone F345
Connector system 24° conus micro F347-351
Connector system micro F350
Control fitting F353-356
Control fitting for gas springs F353
Controllable gas springs F318
Conveyor belt, electrically controlled J20-23
Counter view, mechanical J14
Coupling spigot A42
Coupling spigot holder A42
Coupling spigot with thread C10
Cyanoacrylate adhesive H12
Cylinder pressure regulator F363
Damper for lifting units to Mercedes-Benz F132
Damper stopper G26
Damper, heavy-duty G24
Damper, light-duty G22-23
Date stamp complete (short version), embossed lettering L59
Date stamp complete, embossed lettering L58
Deflection of pillars and bending equation D25
Delimiting guide for conveyor belt J24
Delimiting guide with loss prevention for conveyor belt J25
Demountable guide pillar with centre fixing D72-74
Demountable guide pillar with centre fixing and ring nut D76
Demountable guide pillar with conical centre fixing D77
Demountable guide pillar, conical, with ball cage retainer, DIN 9825/ISO 9182-4/AFNOR D42
Diaphragm pressure switch F358
Die lifting bolt with safety ring and spring, to VW standard C30
Die lifting bolt with safety ring, CNOMO Standard C31
Die lifting bolt with safety ring, for lifting flange 2133.12. C33
Die lifting bolt with safety ring, VDI 3366 C29
Die set A17-21
Die set ~DIN 9816 Shape D A13
Die set ~DIN 9868/ISO 11415 A24-31
Die set coupling spigot C10
Die set DIN 9812 Shape C/CG A14
Die set DIN 9812 Type D/DG A10
Die set DIN 9814 Shape C/CG A15
Die set DIN 9814 Type D/DG A11
Die set DIN 9816 Shape D A12
Die set DIN 9819 Shape C/CG A16
Die set DIN 9822 Shape C A19
Die set ECO-LINE A36-37
Die set press unit A40-41
Die set press units - Accessories A42
Die set shank with collar C9
Die set shank, straight C8
Die set to costumers' specifications, Steel A35
Die set to customers' specifications, Aluminium A32-35
Die set to customers' specifications, Steel A32-34
Disc F76
Disc spring DIN 2093 F55
Dowel pin similar to DIN EN ISO 8734 E198-199
Dowel pin with internal extracting thread, similar to DIN EN ISO 8735 E192-193
Drill bush with collar, DIN 172, Shape A E200
Drill bush without collar, DIN 179, Shape A E201
Dynamic stripping element (DAE) E162
Dynamometer for gas springs F366-367
Ejector pin, hardened, DIN ISO 6751 L44-45
Ejector pin, hardened, round stepped, DIN ISO 8694 L48
Ejector pin, hardened, similar to DIN 1530 Shape D L50-51
Ejector Pin, nitrided, DIN ISO 6751 L46-47
Ejector pin, nitrided, round stepped, DIN ISO 8694 L49
Ejector pin, nitrided, similar to DIN 1530 Shape D L52
Ejector rod L12
Ejector sleeve, hardened, DIN ISO 8405 L56
Ejector sleeve, nitrided, DIN ISO 8405 L57
Elastomer Stripper F186
Electro-mechanical transporter - horizontal centre gear position, two slides, with profile and support J36
Electro-mechanical transporter - horizontal gear position J33
Electro-mechanical transporter - horizontal gear position, two slides, with profile and support J35
Electro-mechanical transporter - horizontal gear position, with profile and support J34
Electro-mechanical transporter - vertical centre gear position, two slides, with profile and support J36
Electro-mechanical transporter - vertical gear position J33
Electro-mechanical transporter - vertical gear position, two slides, with profile and support J35
Electro-mechanical transporter - vertical gear position, with profile and support J34
Electro-mechanical transporters - Angled mounting with adapter plate J39
Electro-mechanical transporters - Distance J38
Electro-mechanical transporters - Fastening element J37
Electro-mechanical transporters - Fastening element with height adjustment system J37
Electro-mechanical transporters - Quick clamp for guiding system J38
FIBRO Compact Cam (FCC) Tool slides K8
FIBROELAST® Tubular spring element 70 Shore A F66
FIBROELAST®-Hollow round rod G20
FIBROELAST®-Plate G18
FIBROELAST®-Round rod G19
FIBROFIX®-SECHS H7
FIBROFIX®-SECHS - Technical data H6
FIBROFIX®-SECHS Application with the injection gun H17
FIBROFLEX® - Blanking, forming and embossing tools - Application examples G27-29
FIBROFLEX® - Technical data G8-9
FIBROFLEX®-Elastomer spring for FIBROFLEX®-Spring system F58

FIBRO

Index

FIBROFLEX®-Hollow round rod G15
FIBROFLEX®-Hollow Square rod G13
FIBROFLEX®-Hollow triangular rod (60°) G17
FIBROFLEX®-Plate G10
FIBROFLEX®-Round rod G14
FIBROFLEX®-Square rod G11
FIBROFLEX®-Triangular rod (60°) G16
FIBROFLEX®-Tubular spring element F81
FIBROFLEX®-Tubular spring element 80 Shore A, to DIN ISO 10069-1 F60
FIBROFLEX®-Tubular spring element 90 Shore A, to DIN ISO 10069-1 F62
FIBROFLEX®-Tubular spring element 95 Shore A, to DIN ISO 10069-1 F64
FIBROFLEX®-U-Profil rod G12
FIBROLIT® Press tool lubricant H16
FIBROLIT®-ARF Marking out blue H13
FIBROLIT®-Grease-LD H15
FIBROLIT®-LSP Leak Detector Spray H11
FIBROLIT®-Metal adhesive MK - Technical data H8
FIBROLIT®-Oil-LD H15
FIBROLIT®-RL Penetration lubricant spray H13
FIBROLIT®-TW Release agent H14
FIBROLIT®-ZWO H7
FIBROLIT®-ZWO - Technical data H6
FIBROLIT®-ZWO und FIBROFIX®-SECHS Application examples H18-19
FIBROZIPP E194
Filling and control fitting F363
Filling hose F363
Fine blanking die set A22
Flanged guide bush "ECO-LINE", Bronze with solid lubricant rings, ISO 9448-4 D140-142
Flanged guide bush "ECO-LINE", bronzeplated, ISO 9448-4 D137-139
Flanged guide bush for ball bearing, ISO 9448-5 D143-145
Flanged guide bush with ball cage retainer D110-111
Flanged guide bush, sintered ferrite carbonitrided with long-term lubrication, ISO 9448-4 D134-136
Flat ejector pin, hardened, similar to DIN ISO 8693 L54
Flat ejector pin, nitrided, similar to DIN ISO 8693 L55
Flat guide bar with two sliding surfaces, Bronze with solid lubricant D174
Flat guide bar, Bronze with solid lubricant D171-176
Flat mushroom head screw with hexagon socket C48
Flex cam K3
Fluid Metal H12
Foil shim B20
Forming / Demoulding L41
Gas spring (Spring plunger), to WDX F157
Gas spring (Spring plunger), with hexagon socket, VDI 3004 F154-156
Gas spring (spring-loaded plunger) MOULD LINE L72-73
Gas spring connection systems F330
Gas spring DS F279-287
Gas spring HEAVY DUTY F191-201
Gas spring LCF, damped F309-317
Gas spring MOULD LINE L63-81
Gas spring MOULD LINE - Description L64-66
Gas spring MOULD LINE - Installation instructions L67-68
Gas spring POWERLINE F211-235
Gas spring SPEED CONTROL, cushioned F267-277
Gas spring with external thread F292-296
Gas spring with hexagonal flange F300
Gas spring with male fixing thread, POWERLINE F298-299
Gas spring with male fixing thread, small mounting height F297
Gas spring with thread F291
Gas spring with through bore passage F203-209
Gas spring, small dimension and low force F159-171
Gas spring, Standard F173-189
Gas spring, with low build height F257-265
Gas springs - Accessories F321
Gas springs - Application examples F373-380
Gas springs - Description F142-145
Gas springs - General overview F149
Gas springs - Mounting Directions F146-147
Gas springs - Synopsis F150-151
Gas springs (Spring plungers) F153
Gas springs from FIBRO - The Safer Choice F148, L70
Gas springs with fastening to Ford standard WDX F289
Gauge pin - boxed set E205
Gauge pin DIN 2269 E202
Gauge pin holder E204
Gauge pin with handle E205
Gauge pins - boxed set E205
Gas springs for working temperatures up to 120 ° C F301
Guide D279
Guide bar with four sliding surfaces, Bronze with solid lubricant D219
Guide bar with one sliding surfaces, Bronze with solid lubricant D220
Guide bar with three sliding surfaces, Bronze with solid lubricant D217-221
Guide bar with two sliding surfaces, Bronze with solid lubricant D218
Guide bar with two sliding surfaces, Bronze with solid lubricant, CNOMO D216
Guide bar with two sliding surfaces, Bronze with solid lubricant, VDI 3357 D215
Guide bearing for ball bearing guide D87
Guide bearing low build height, for ball bearing guide D93
Guide bearing with headed guide bush with solid lubricant D94
Guide bearing with screw holes, for ball bearing guide D90
Guide bearing with screw holes, sintered guide D89
Guide bearing with solid lubricant D84
Guide bearing, low build height, sintered guide D92
Guide bearing, sintered guide D86
Guide bracket, Bronze with solid lubricant, VDI 3387 D223
Guide bracket, Steel with solid lubricant, VDI 3387 D222
Guide bush "ECO-LINE", Bronze with solid lubrication rings, ISO 9448-2 D98
Guide bush "ECO-LINE", bronzeplated, ISO 9448-2 D97
Guide bush for ball bearing, AFNOR D100
Guide bush for ball bearing, for highest stroking speed D70
Guide bush for ball bearing, ISO 9448-3 D70-99
Guide bush for ball bearing, small dimension D26
Guide bush for ball bearing, with stroke limitation D101
Guide bush for punch DIN 9845, Shape C E148
Guide bush for punch ISO 8978 E149
Guide bush for spring ram 2478.20. .1 F140
Guide bush with collar, bronze coated, ~AFNOR D155
Guide bush with collar, Bronze with solid lubricant D162, L33
Guide bush with collar, Bronze with solid lubricant, CNOMO D169
Guide bush with collar, Bronze with solid lubricant, DIN 9834/ISO 9448 D166
Guide bush with collar, Bronze with solid lubricant, NAAMS D167-168
Guide bush with collar, Bronze, CNOMO D170
Guide bush with collar, for ball bearing, ~AFNOR D154
Guide bush, Bronze L36-37
Guide bush, Bronze with solid lubricant D160, L35
Guide Bush, headed L27
Guide bush, sintered ferrite carbonitrided with long-term lubrication, ISO 9448-2 D96
Guide elements - Mounting guidelines, Dimension tables D288-294

Index

Guide elements - Pairing classification D22-23
Guide elements - Selection matrix D24
Guide elements for mould making L9
Guide pillar L14-15
Guide pillar "ECO-Line" endwise bolt-on type, ~DIN 9825/~ISO 9182-2 D38
Guide pillar "ECO-Line", ~DIN 9825/~ISO 9182-2 D36
Guide pillar (Angle pin) L25
Guide pillar DIN 9825/ISO 9182-2 D27
Guide pillar endwise bolt-on type with ball cage, ~DIN 9825/~ISO 9182-2 D34
Guide pillar endwise bolt-on type, ~DIN 9825/~ISO 9182-2 D32
Guide pillar for large tools, DIN 9833/ISO 9182-3 D47
Guide pillar for lifting unit to Mercedes-Benz F130
Guide pillar with 5° pilot taper, to VW-Standard D48
Guide Pillar with ball cage retainer D28
Guide pillar with collar D69
Guide pillar with collar "ECO-LINE" D68
Guide pillar with collar and ball cage retainer D64
Guide pillar with collar, screw clamp retention, DIN 9825/~ISO 9182-5 D62
Guide pillar with collar, to WDX D60
Guide pillar with flange L24
Guide pillar with groove D59
Guide pillar with groove, to CNOMO D58
Guide pillar with groove, to VW D50
Guide pillar with internal thread on both sides, ~DIN 9825/~ISO 9182-2 D29
Guide pillar with internal thread on bottom, ~DIN 9825/~ISO 9182-2 D30
Guide pillar with internal thread on top, ~DIN 9825/~ISO 9182-2 D31
Guide pillar with pilot taper, VDI 3356 D49
Guide pillar with pilot tapper and groove, to Mercedes-Benz Standard D56
Guide pillar with retaining ring groove, ~AFNOR D52
Guide pillar with snap ring groove, to Mercedes-Benz Standard D54
Guide pillar, conical, DIN 9825/ISO 9182-4/AFNOR D40
Guide pillar, shouldered L16-19
Guide pin F72
Guide sleeve L26
Guide to Mercedes-Benz Standard - hardened D281
Guide to Mercedes-Benz Standard - unhardened D280
Guide unit with center fixing MILLION GUIDE D82
Guide unit with collar MILLION GUIDE D80
Guide with part position control and spring D282
Guide with part position control, VDI D283
Headed guide bush "ECO-LINE", Bronze with solid lubricant rings, ISO 9448-6 D126-128
Headed guide bush "ECO-LINE", bronzeplated, ISO 9448-6 D123-125
Headed guide bush for ball bearing, ~AFNOR D150-152
Headed guide bush for ball bearing, ISO 9448-7 D129-133
Headed guide bush with ball cage retainer D108-109
Headed guide bush, bronze coated, ISO 9448-6 D115-117
Headed guide bush, sintered ferrite carbonitrided with long-term lubrication, ~AFNOR D146-148
Headed guide bush, sintered ferrite carbonitrided with long-term lubrication, ISO 9448-6 D118-122
Helical spring for ball cage retention D268
Hexagon Nut DIN 6330 B C39
Hexagon nut with collar, DIN 6331 C40
Hexagon socket countersunk head cap screw, ISO 10642 - Strength class 8.8 C46
Hexagon socket head cap screw, DIN EN ISO 4762 - Strength class 12.9 C43
Hexagon socket head cap screw, DIN EN ISO 4762 - Strength class 8.8 C42
Hexagon socket head cap screw, with low profile head and key guide, DIN 6912 - Strength class 8.8 C44
High performance compression spring DIN ISO 10243 F24-53
High performance compression springs - Cyclic stress maxima/minima as applicable to extended/limited life F23
High performance compression springs - Description F22
High-Precision special parts to customer´s drawings E188-189
Hinge for spacer F95
Hoisting snap link, omnidirectional C18
Holding sleeve for lifter units to BMW standard F136
Hose press, pneumatic F371
Hose shears F371
Inductive proximity switch D284
Injection gun for FIBROFIX®-SECHS H7
Insert sleeve with thrust pin VDI 3374 Shape A E25
Insert sleeve with thrust pin VDI 3374 Shape B E26
Insertion tool F120
Installation frame for counter view J15
Instruction for hose assembly in the Minimess system F331
LCF Gas Spring, damped F303-316
Lifter pin for press tool strips D273
Lifter rail for lifter units to BMW standard F136
Lifter stud C15
Lifter stud VDI 3366 C13
Lifter stud with cable securing device C14
Lifter stud with cable securing device, with welded disc C13
Lifter unit with installation block to BMW standard F135
Lifter, round with pilot pin hole to BMW standard F134
Lifting eye bolt, high tensile C16
Lifting eye bolt, rotatable C17
Lifting flange with bolt with safety ring C26-27
Lifting flange with bolt with safety ring, to BMW C25
Lifting flange with bolt with safety ring, with feather key, to CNOMO Standard C28
Lifting unit (not damped/damped) to Mercedes-Benz F129
Liner bush for dowel pin, for bonding E196
Liner bush for dowel pin, for push fit E197
Locating bolt F70
Locating bolt, threaded F70
Locating guide bush, headed L28
Locating guide pillar, shouldered L20-23
Locating plate for guide pillar, to VW D51
Manifoldsystems F320
Matrix with collar for dynamic stripper (DAE), blank E166
Matrix with collar for dynamic stripper (DAE), round E168
Matrix with collar, conical E155
Matrix with collar, cylindrical E153
Matrix with collar, DIN 9845 Shape B E151
Matrix with shoulder, blank, ISO 8977 E131
Matrix with shoulder, rectangle with radiussed corners, ISO 8977 E140
Matrix with shoulder, rectangular, ISO 8977 E136
Matrix with shoulder, round, ISO 8977 E132
Matrix with shoulder, slot, ISO 8977 E138
Matrix with shoulder, square, ISO 8977 E134
Matrix without collar for dynamic stripper (DAE), blank E165
Matrix without collar for dynamic stripper (DAE), round E167
Matrix without collar, conical E154
Matrix without collar, cylindrical E152
Matrix without collar, DIN 9845 Shape A E150
Matrix without shoulder, blank, Automotive Standard E142
Matrix without shoulder, blank, ISO 8977 E119
Matrix without shoulder, rectangle with radiused corners, Automotive Standard E147
Matrix without shoulder, rectangle with radiussed corners, ISO 8977 E128
Matrix without shoulder, rectangular, Automotive Standard E145

Index

Matrix without shoulder, rectangular, ISO 8977 E124
Matrix without shoulder, round, Automotive Standard E143
Matrix without shoulder, round, ISO 8977 E120
Matrix without shoulder, slot, Automotive Standard E146
Matrix without shoulder, slot, ISO 8977 E126
Matrix without shoulder, square, Automotive Standard E144
Matrix without shoulder, square, ISO 8977 E122
Metal adhesive FIBROLIT® MK H9
Micro control fitting F352
Minimess - Compound Threaded Joints F337-340
Minimess – Compound Threaded Joints F336
Mounting arrangement for gas springs in the Minimess system F331-335
Multiple control fitting F355
Notes on guide elements A7, D21
Oil H14
Oilless guide elements D157-158
Oilless guide elements - Mounting examples D252-255
O-ring, Viton L61
Overrun Cam, Bronze with solid lubricant, VDI 3357 D227
Overrun Cam, Steel hardened and gas nitrided, VDI 3357 D226
Overrun Cam, Steel hardened, VDI 3357 D225
Pallet carrier plate A58
Pillar wiper D272
Pilot pin with parabolic tip, ISO 8020 E114
Pilot pin with tapered tip, ISO 8020 E113
Pilot unit to Mercedes-Benz Standard E115
Piloted counterbore for tapered-head punch E31
Pneumatic conveyor J29
Precision components - Description of materials E16-17
Precision feeler gauge B20
Precision flat and square bar steel with machining allowance, DIN 59350 B9-19
Precision flat and square bar steel, ~DIN 59350 B8
Precision flat and square bar steel, DIN 59350 B18
Pressure plate, shock absorbing F325
Pressure reservoir F322-324
Prismatic guide, Bronze with solid lubricant D239-240
Prismatic guide, Steel D242
Prismatic guide, Steel, NAAMS D237
Prismatic guide, Steel, VDI 3357 D238
Progression lamination die set unit A47-52
Punch DIN 9844, Shape A E33
Punch DIN 9844, Shape B E34
Punch DIN 9861 Shape C E21
Punch DIN 9861 Shape CA E20
Punch DIN 9861 Shape D / ISO 6752 E19
Punch DIN 9861 Shape DA E18
Punch similar DIN 9844, Shape A E41
Punch similar DIN 9844, Shape B E42
Punch similar DIN 9861, Shape C E44
Punch similar DIN 9861, Shape D E43
Punch similar to DIN 9861 Shape C E23
Punch similar to DIN 9861 Shape CA E22
Punch similar to VDI 3374 E35
Punch VDI 3374 E24
Punch with ejector pin E36
Punch with ejector pin, stepped, long point E38
Punch with ejector pin, stepped, short point E37
Punch with head, square / rectangular, Shape A E191
Punch with tapered head 30°, Shape C E28
Punch with tapered head 30°, Shape D E27
Punch with tapered head, Shape D E30
Punch without head, square / rectangular, Shape A E190
Punch, blank, ISO 8020 E101
Punch, blank, with ejector pin, ISO 8020 E107
Punch, stepped, rectangle with radiused corners, ISO 8020 E106
Punch, stepped, rectangle with radiussed corners, with ejector pin, ISO 8020 E112
Punch, stepped, rectangular, ISO 8020 E104
Punch, stepped, rectangular, with ejector pin, ISO 8020 E110
Punch, stepped, round, ISO 8020 E102
Punch, stepped, round, with ejector pin, ISO 8020 E108
Punch, stepped, slot, ISO 8020 E105
Punch, stepped, slot, with ejector pin, ISO 8020 E111
Punch, stepped, square, ISO 8020 E103
Punch, stepped, square, with ejector pin, ISO 8020 E109
Punches - Mounting guidelines E32
Punching and embossing unit with matrix for punched holes and self tapping screws E206
Quill holder for core tempering L60
Rectangular guide, Steel with Rollers L39
Rectangular Guide, Steel with solid lubricant L38
Release agent H14
Representatives 8-9
Retaining bolt F80
Retaining bush for guide pillar conical 2020.64. D78
Retaining bush for guide pillar conical 2021.50., DIN 9825/ISO 9182-4 D45
Retaining bush for guide pillar conical 2021.50.,~ AFNOR D46
Retaining disc with countersunk head cap screw, DIN 9825/ISO 9182-4 D44
Retaining disc with screw D66
Retaining disc with socket cap screw, ~ AFNOR D44
Retaining plate, Bronze with solid lubricant D180
Retaining plate, Bronze with solid lubricant, CNOMO D183
Retaining plate, Bronze with solid lubricant, VDI 3357 D177
Retaining plate, Steel with solid lubricant, NAAMS D181
Retaining plate, Steel with solid lubricant, VDI 3357 D179
Retaining plate, Steel, CNOMO D182
Retaining plate, Steel, VDI 3357 D178
Retaining washer L11
Retention bearing D85
Retention bearing for guide pillars for large tools D95
Retention bearing with screw holes D88
Retention bearing, low build height D91
Ring block with position lock C24
Ring nut DIN 1804 D79
Roller cage with assembly aid, Brass D114
Roller cage with circlip groove, Brass D112
Roller insert with collar J10
Roller insert without collar J10
Roller rail J11
Roller slide units K5
Rotary safety eyebolt, heavy duty, with ball bearing C20
Rotary safety eyebolt, light duty, with ball bearing C19
Round wire compression spring F54
Screw clamp with screw D274-275
Screw clamp with screw, CNOMO D276
Screw clamp with screw, GM Standard D275
Screw clamp with screw, NAAMS D275
Screw for T-slot, DIN 787 C41
Screw plug C47
Screw-in lifter stud VDI 3366 C11
Screw-in lifter stud with cable securing device C12
Securing flange with screws, CNOMO D276
Selection table multiple layering G25
Service station, mobile, for gas springs F370
Set screw C39
Setting-up bumper, round F91
Setting-up bumper, square F92
Shedder insert F90
Shock absorbing washer F79, G21
Shoulder screw F88
Silicon oil H14

Index

Single-sided prismatic guide, Bronze with solid lubricant D244-248
Single-sided prismatic guide, Bronze with solid lubricant, CNOMO D246
Single-sided prismatic sliding block, Steel D245-249
Single-sided prismatic sliding block, Steel, CNOMO D247
Sleeve for lifting unit to Mercedes-Benz F131
Slide centre guide, Bronze with solid lubricant D224
Slide stop D250
Sliding block, Bronze with solid lubricant D243
Sliding block, Bronze with solid lubricant, NAAMS D237
Sliding block, Bronze with solid lubricant, VDI 3357 D238
Sliding block, Steel D239-240
Sliding pad, Bronze with oil groove, CNOMO D210
Sliding pad, Bronze with solid lubricant D194-198
Sliding pad, Bronze with solid lubricant, AFNOR/ISO 9183-2 D204
Sliding pad, Bronze with solid lubricant, CNOMO D197
Sliding pad, Bronze with solid lubricant, ISO 9183-1 D192
Sliding pad, Bronze with solid lubricant, NAAMS D202
Sliding pad, Bronze with solid lubricant, VDI 3357 D186-214
Sliding pad, small dimension, Bronze with solid lubricant D184
Sliding pad, Special cast iron (GG25) with solid lubricant, AFNOR/ISO 9183-2 D206
Sliding pad, Steel with oil groove, CNOMO D208
Sliding pad, Steel with sinterlayer, VDI 3357 D190
Sliding Pad, Steel with solid lubricant D201
Sliding pad, Steel, CNOMO D200
Sliding pad, Steel, NAAMS D203
Sliding pad, Steel, VDI 3357 D188-212
Slotted nut D156
Snap ring D57
Socket head cap screw, with low profile head, DIN 7984 - Strength class 8.8 C45
Spacer bush D266
Spacer for die release F93
Spacer plate toothed, with adjusting plate D278
Spacer plug F77
Spacer sleeve F76
Spacer sleeve for lifting units to Mercedes-Benz F133
Spacer tube D266, F74
Spacer with spring for die release F94
Special die set to customer's specifications A43-46
Spigot holder C11
Spring and spacer unit F87
Spring- and spacer unit F84-85
Spring- and spacer unit, low installation space F86
Spring mounted rollers to VW Standard J12-13
Spring plunger, increased spring force, VDI 3004, Colour marking: red F102-103
Spring plunger, medium spring force, VDI 3004, Colour marking: white F100-101
Spring plunger, standard spring force, VDI 3004, Colour marking: yellow F98-99
Spring plunger, with spring loaded ball, straight version F117
Spring plunger, with spring loaded ball, straight version, with collar F118-119
Spring plunger, with spring loaded ball, with hexagon socket, increased spring force F107
Spring plunger, with spring loaded ball, with hexagon socket, standard spring force F106
Spring plunger, with spring loaded ball, with slot, increased spring force F105
Spring plunger, with spring loaded ball, with slot, standard spring force F104-108
Spring plunger, with spring loaded pin and seal, with hexagon socket, increased spring force F113
Spring plunger, with spring loaded pin and seal, with hexagon socket, standard spring force F112
Spring plunger, with spring loaded pin, straight version, with collar F117
Spring plunger, with spring loaded pin, with hexagon socket, increased spring force F114
Spring plunger, with spring loaded pin, with hexagon socket, standard spring force F111
Spring plunger, with spring loaded pin, with slot, increased spring force F113-116
Spring plunger, with spring loaded pin, with slot, standard spring force F109-115
Spring plungers F97
Spring ram with gas spring F138
Spring ram with gas spring to VW standard F139
Spring unit for elastomer spring F82
Spring unit for helical spring F83
Stacked control fittting for individual control F357
Stacking washer DIN ISO 10069-2 F71
Stand for conveyor belt J26
Standard cam slide units K4
Standardised special shapes E157-161
Steel plate ISO 6753-1 A38, B6
Stepped Block DIN 6318 C38
Stock lifter F124-125
Stock lifter with attachment lug F126
Stop buffer D251
Stop washer E187, F75, L11
Stripper F127
Strippers for blanking dies F96
Stripping unit - Mounting plate E184
Stripping unit - Pressure plate E183
Stripping unit for punches E182
Stripping unit, flanged mounting F123
Stripping unit, wall and bottom mounting F122
Support, adjustable C38
T-Guide bar, Bronze with solid lubricant D236
Thinning agent for FIBROLIT®-ZWO H9
Thinning agent for FIBROLIT®-ZWO - Technical data H8
Threaded die set shank DIN ISO 10242-1 C8
Threaded disc for compression springs F78
Threaded disc for elastomer springs F78
Thrust Pad F326
Thrust pad driver F120
Thrust plate F326-327
Thrust plate to Renault standard F327
Thrust washer F71, F80
Thrust washer, Bronze with solid lubricant D159
Tooling pallet die set A53-57
Tooling pallet die set - Accessories A58
Toolkit for assembling gas springs F368
Triangle retainer for ball-lock punches, heavy duty E171-173
Triangle retainer for ball-lock punches, light duty E170-172
Triangle retainer, for punches ISO 8020 with anti-rotation element E179
Triangle retainer, for punches ISO 8020 without anti-rotation element E178
Trust washer for compression springs F73
Trust washer for elastomer springs F72
Tubular Spring Element, Rubber 70 Shore A F68
Universal lifter unit according to BMW standard F137
Universal rotary safety eyebolt for chain C22
Universal rotary safety eyebolt with eye hook C23
Universal rotary safety eyebolt with oval ring C21
Washer DIN 6340 C40
Wireless Pressure Monitoring - wireless monitoring of gas springs F360-362
Wooden box E204

FIBRO

Numerical Index

201.01.	A10
201.03.	A11
201.05.	A12
201.07.	A13
201.11.	A14
201.13.	A15
201.145.	A41
201.149.	A41
201.21.	A16
201.23.	A17
201.26.	A18
201.31.	A19
201.33.	A20
201.36.	A21
201.39.	A22
201.45.	A32
201.46.	A33
201.47.	A34
201.49.	A35
201.50.	A47-52
201.65.	A32
201.66.	A33
201.67.	A34
201.69.	A35
201.95.	A53-57
201.96.	A58
201.97.	A58
201.98.	A59
2010.	A24-31
2010.55.	A36-37
2010.57.	A36-37
2010.59.	A36-37
2011.45.	A40
2011.49.	A40
2016.	K4
2016.13.	K7
2016.23.	K6
2016.25.	K8
2017.	K5
2018.	K3
2018.00.60.08.030	D284
2018.00.60.23.01.5	D285
2018.00.60.23.02.5	D285
202.17.	D28
202.19.	D27
202.21.	D32
202.22.	D29
202.23.	D30
202.24.	D31
202.29.	D36
202.31.	D38
202.53.	D44
202.55.	D34
202.60	D76
202.61.	D69
202.91.	D269
202.92.1.	D270
202.93.	D271
2020.62.	D74
2020.63.	D72
2020.64.	D77
2021.29.	D68
2021.39.	D45
2021.43.	D66
2021.44.	D64
2021.46.	D62
2021.50.	D40
2021.53.	D44
2021.58.	D42
2021.64.	D78
2022.12.	D56
2022.13.	D48
2022.15.	D49
2022.16.	D54
2022.16.45.	D58
2022.16.48.	D59
2022.17.	D50
2022.19.	D47
2022.25.	D52
2022.29.	D60
2022.40.1.	D51
2024.94.	D80
2024.96.	D82
2025.94.	D67
2031.01.	D85
2031.02.	D88
2031.04.	D91
2031.31.	D86
2031.34.	D89
2031.38.	D92
2031.41.	D87
2031.42.	D90
2031.44.	D93
2031.70.	D84
2032.02.	D95
2032.70.	D94
2051.32.	D96
2051.72.	D98
2051.92.	D97
2052.70.	D160-161
2052.71.	F140
2053.70.	D159
206.41.	D71
206.49.	D100
206.51.	D26
206.54.	D26
206.71.	D102
206.72.	D113
206.73.	D104
206.75.	D106
206.91.	D265
206.92.	D267
206.93.	D266
206.94.	D266
206.95./2061.95.	D272
2060.61.	D103
2060.63.	D105
2060.65.	D107
2061.44.	D70-99
2061.47.	D101
2061.48.	D57
2061.82.	D112
2061.84.	D114
2062.44.012.	D70
207.45	D274
207.48.	D156
2071.45	D274
2072.45.	D274
2072.46	D275
2072.46.30.	D275
2072.47	D275
2072.48.45.	D276
2073.45.	D276
2073.46.	D53
2073.48.	D79
2081.31.	D118
2081.32.	D119
2081.33.	D120
2081.34.	D121
2081.35.	D122
2081.44.	D129
2081.45.	D130
2081.46.	D131
2081.47.	D132
2081.49.	D133
2081.67.	D108
2081.68.	D109
2081.71.	D126
2081.74.	D127
2081.75.	D128
2081.81.	D115
2081.84.	D116
2081.85.	D117
2081.91.	D123
2081.94.	D124
2081.95.	D125
2082.70.	D166
2082.71.	D167
2085.70.	D162
2085.71.	D163
2085.72.	D165
2086.70.	D164
2086.71.	D168
2087.70.	L31
2087.71.	L32
2087.72.	L30
2087.73.	L33
2091.31.	D134
2091.32.	D135
2091.34.	D136
2091.44.	D143
2091.45.	D144
2091.46.	D145
2091.67.	D110
2091.68.	D111
2091.71.	D140
2091.72.	D141
2091.74.	D142
2091.91.	D137
2091.92.	D138
2091.94.	D139
210.31.	D146
210.34.	D147
210.35.	D148
210.39.	D46
210.44.	D150
210.45.	D154
210.46.	D152
210.85.	D155
2102.70.	D169
2102.71.	D170
211.11.	C8
211.12.	C8
211.13.	C9
211.14.	C9
212.11.	A42, C10
212.15.	A42, C10
212.16.	C11
212.16.1.	A42
213.12.	C11
213.13.	C15
2130.03.	C12
2130.11.	C13
2130.12.	C13
2130.13.	C14
2131.10.	C16
2131.11.	C17
2131.15.	C18
2131.20.	C19
2131.21.	C20
2131.22.	C24
2131.23.	C23
2131.25.	C21
2131.26.	C22
2132.10.	C29
2132.10.03. .1	C32
2132.10.55.	C30
2132.11.	C31
2133.11.	C25
2133.12.	C26-27
2133.12. .1	C33
2133.13.	C28
2140.01.01.	C50
2140.01.02.	C51
2140.02.	C39
2140.10.	C36
2140.11.	C37
2140.13.	C35
2140.14.	C35
2140.15.	C34
2140.16.	C36
2140.17.	C34
2140.18.	C37
2140.19.	C38
2140.20.	C38
2140.30.	C41
2140.32.	C39
2140.33.	C40
2140.34.	C40
2192.10.	C42
2192.12.	C43
2192.20.	C44
2192.30.	C46
2192.40.	C45
2192.61.	C48
2192.90.	C47
2195.114.	J24
2195.115.	J24
2195.116.	J24
2195.117.	J24
2195.120./121.	J26
2195.130./131.	J26
2195.140./141.	J26
2195.150./151.	J26
2195.218.	J25
2195.219.	J25
2195.220.	J25
2195.221.	J25
2195.301.	J20
2195.302.	J21
2195.401.	J22
2195.402.	J23
2198.32.	J8
2198.33.	J8
2198.34.	J10
2198.35.	J10
2198.42.	J9
2198.44.	J11
2198.50.55.	J12-13
2199.03/10/40/70	J29
220.	E33
2201.	E101

Numerical Index

2202.	E47
2203.	E73
2204.	E59
2205.	E85
221.	E34
2211.	E102
2212.	E48
2213.	E74
2214.	E60
2215.	E86
222.	E18
2221.	E103
2222.	E49
2223.	E75
2224.	E61
2225.	E87
223.	E19
2231.	E104
2232.	E50
2233.	E76
2234.	E62
2235.	E88
224.	E20
2241.	E105
2242.	E51
2243.	E77
2244.	E63
2245.	E89
225.	E21
2251.	E106
2252.	E52
2253.	E78
2254.	E64
2255.	E90
2261.	E113
2262.	E71
2263.	E97
2271.	E114
2272.	E72
2273.	E98
2276.	E115
2280.01.	L58
2280.02.	L59
2281.	E27
2282.01.	E206
2284.00.	E31
2284.3.	E30
2291.	E28
2299.001.	J33
2299.002.	J33
2299.011.	J34
2299.012.	J34
2299.121.	J35
2299.122.	J35
2299.221.	J36
2299.222.	J36
2299.510	J37
2299.511	J37
2299.520	J38
2299.530	J39
2299.540	J38
2299.541	J38
230.	E190
231.	E191
232.	E24
233.	E25
234.	E26
235.1.	E198
2351.1.	E199
236.001.	E194
236.1.	E192
2361.1.	E193
237.1.	L44-45
237.8.	L46-47
238.1.	L48
238.8.	L49
239.1.	L50-51
239.8.	L52
240.1./2.	E202
240.11.	E205
240.22.	E205
240.31.	E205
240.32.	E205
240.45.	E204
240.91.	E204
240.92.	E204
241.00.1.	F89
241.02.	F54
241.14.10.	F24
241.14.13.	F26
241.14.16.	F28
241.14.20.	F32
241.14.25.	F36
241.14.32.	F40
241.14.40.	F44
241.14.50.	F48
241.14.63.	F52
241.15.10.	F24
241.15.13.	F26
241.15.16.	F29
241.15.20.	F33
241.15.25.	F37
241.15.32.	F41
241.15.40.	F45
241.15.50.	F49
241.15.63.	F53
241.16.10.	F25
241.16.13.	F27
241.16.16.	F30
241.16.20.	F34
241.16.25.	F38
241.16.32.	F42
241.16.40.	F46
241.16.50.	F50
241.17.10.	F25
241.17.13.	F27
241.17.16.	F31
241.17.20.	F35
241.17.25.	F39
241.17.32.	F43
241.17.40.	F47
241.17.50.	F51
241.18.	D268
242.01.	F55
243.7.	F186
243.7. .1	F187
2431.7.	E182
244.00.2.	D273
244.1.	F58
244.10.	F76
244.10.15.	F75
244.11.	F76
244.12.	F77
244.13.	F77
244.14.0.	F82
244.15.0.	F83
244.16.	F87
244.17.	F88
244.20./25./32./40.	F84-85
244.20./25./32./40.3.	F86
244.4.	F71
244.5.	F72
244.6.	F72
244.7.	F73
244.9.	F74
2441.11.	D257
2441.11.0.	D256
2441.11.3.	D258
2441.13.	D261
2441.13.3.	D262
2441.13.3.45.	D260
2441.13.45.	D259
2441.14.	F78
2441.14.1.	F82
2441.15.	F78
2441.15.1.	F83
2441.16.	F80
2441.18.	F80
2441.3.	F71
2441.5.	F70
2441.6.	F70
2442.12.	L10
2442.12.3.	L11
2442.12.4.	L11
2442.13.	L10
2443.10.	D279
2443.10.20.	D280
2443.10.20. .1	D281
2443.12.	D282
2443.13.	D283
2444.12/2444.13	D278
2445.10.	D263
2445.11.	D264
2450.	F79, G21
2450.10A.	G22
2450.11B.	G23
2450.20□.	G24-25
2451.10D.	G26
2451.6.	D250
2451.6. .2	D251
246.5.	F60
246.6.	F62, F81
246.7.	F64
2461.2.	F68
2461.4.	F66
247.6.	F90
2470.10. .016. .1	F99
2470.10. .016. .2	F103
2470.10. .016. .3	F101
2470.10. .1	F98
2470.10. .2	F102
2470.10. .3	F100
2470.10.11	F120
2470.12.010.017	F120
2471.01.	F104
2471.02.	F105
2471.03.	F106
2471.04.	F107
2471.05.	F108
2471.31.	F104
2471.32.	F105
2471.33.	F106
2471.34.	F107
2471.35.	F108
2471.6.	F90
2472.01.	F109
2472.02.	F113
2472.03.	F111
2472.04.	F114
2472.05.	F115
2472.06.	F116
2472.07.	F112
2472.08.	F113
2472.11.	F120
2472.21.	F110
2472.22.	F110
2472.31.	F109
2472.33.	F111
2472.34.	F114
2472.35.	F115
2472.36.	F116
2472.37.	F112
2473.01.	F117
2473.02.	F117
2475.01.	F118
2475.02.	F118
2475.03.	F119
2475.04.	F119
2477. .1.01	F122
2477. .1.02	F123
2478.	F138
2478.10.	F124
2478.20. .1	F139
2478.20.15.10	F134
2478.20.15.20.	F135
2478.20.15.23.	F136
2478.20.15.24.	F136
2478.20.15.30.	F137
2478.20.20.	F129
2478.20.20.1.	F130
2478.20.20.2.	F131
2478.20.20.3	F132
2478.20.20.4	F133
2478.30. .1	F125
2478.30. .2	F126
2478.30. .3	F127
2479.030.	F154
2479.031.	F155
2479.032.	F156
2479.034.	F157
2480.00.10.	F341-342
2480.00.22.	F350
2480.00.23.	F336
2480.00.24.	F337-340
2480.00.25.	F345
2480.00.26.	F344-346
2480.00.27.	F348
2480.00.27.01.	F347
2480.00.28.	F349-351
2480.00.30.	F353
2480.00.30.13	F354
2480.00.31.	F353
2480.00.31.02	F363
2480.00.31.11	F356
2480.00.32.07	F363
2480.00.32.21	F363
2480.00.32.71.	F364-365
2480.00.34.	F352
2480.00.35.	F366
2480.00.35.04	F367
2480.00.39.01.	F357

Numerical Index

2480.00.39.04.	F355
2480.00.45.	F358
2480.00.50.04	F369
2480.00.50.11	F368
2480.00.50.20.	F370
2480.00.54.03	F371
2480.00.54.10	F371
2480.00.70.	F322-324
2480.00.90.	F360-362
2480.004.	F326
2480.009.	F326
2480.015.	F325
2480.018.	F326
2480.019.	F327
2480.019.45.	F327
2480.080.	F328-329
2480.12.01500.	F180-181
2480.12.10000.	F188-189
2480.13.00250.	F174-175
2480.13.00500.	F176-177
2480.13.00750.	F178-179
2480.13.03000.	F182-183
2480.13.05000.	F184-185
2480.13.07500.	F186-187
2480.21.	F166-167
2480.22. .1	F168-169
2480.23.	F170-171
2480.32.	F292-293
2480.32.00250.	F294-295
2480.33.	F300
2480.82.00250.	F296-297
2482.72.	F160-161
2482.73. .1	F162-163
2482.74. .2	F164-165
2484.12.01500.	F310-311
2484.13.00750.	F308-309
2484.13.03000.	F312-313
2484.13.05000.	F314-315
2484.13.07500.	F316-317
2485.12.00500.	F260-261
2485.12.00750.	F262-263
2485.12.01500.	F264-265
2486.12.00750.	F270-271
2486.12.01500.	F272-273
2486.12.03000.	F274-275
2486.12.05000.	F276-277
2486.22.03000.	F282-283
2486.22.05000.	F284-285
2486.22.07500.	F286-287
2487.12.00170.	F212-213
2487.12.00320.	F214-215
2487.12.00350.	F216-217
2487.12.00500.	F218-219
2487.12.00750. .1	F220-221
2487.12.01000. .1	F222-223
2487.12.01500.	F224-225
2487.12.02400.	F226-227
2487.12.04200.	F228-229
2487.12.06600.	F230-231
2487.12.09500.	F232-233
2487.12.20000.	F234-235
2487.82.01000.	F299
2488.13.01000.	F192-193
2488.13.02400.	F194-195
2488.13.04200.	F196-197
2488.13.06600.	F198-199
2488.13.09500.	F200-201
2490.14.00420.	F238-239
2490.14.00750.	F240-241
2490.14.01000.	F242-243
2490.14.01800.	F244-245
2490.14.03000.	F246-247
2490.14.04700.	F248-249
2490.14.07500.	F250-251
2490.14.11800.	F252-253
2490.14.18300.	F254-255
2496.12.00270.	F204-205
2496.12.00490.	F206-207
2496.12.01060.	F208-209
250.	G12
251.	G10
2511.3.	G18
252.	G11
252.7.	F92
253.	G14
2531.4.	G19
2531.7.	F91
2532.2.	F96
2533.00.01.	F95
2533.10.	F93
2533.20.	F94
254.	G15
2541.4.	G20
255.	G13
256.	G16
257.	G17
260.	E150
2601.	E154
2602.	E152
2605.	E142
2606.	E119
2607.	E131
261.	E151
2611.	E155
2612.	E153
2615.	E143
2616.	E120
2617.	E132
2618.	E162
2618.06.	E165
2618.07.	E166
2618.16.	E167
2618.17.	E168
262.	E148
2621.	E149
2625.	E144
2626.	E122
2627.	E134
263.1.	L54
263.8.	L55
2635.	E145
2636.	E124
2637.	E136
264.1.	L56
264.8.	L57
2645.	E146
2646.	E126
2647.	E138
265.1.	E196
2650.1.	E197
2655.	E147
2656.	E128
2657.	E140
266.	E35
2664.02.	E178
2664.04.	E179
2664.05.	E170
2664.06.	E171
2664.07.	E172
2664.10.	E173
2667.1.	E183
2667.2.	E184
2668.2.	E175
2668.3.	E176
267.	E36
268.	E37
269.	E38
270.	E41
2701.	E107
2702.	E53
2703.	E79
2704.	E65
2705.	E91
271.	E42
2711.	E108
2712.	E54
2713.	E80
2714.	E66
2715.	E92
272.	E43
2721.	E109
2722.	E55
2723.	E81
2724.	E67
2725.	E93
273.	E44
2731.	E110
2732.	E56
2733.	E82
2734.	E68
2735.	E94
274.	E22
2741.	E111
2742.	E57
2743.	E83
2744.	E69
2745.	E95
275.	E23
2751.	E112
2752.	E58
2753.	E84
2754.	E70
2755.	E96
276.	E200
277.	E201
280.02	H7
280.05	H7
280.08	H7
280.09	H7
280.131	H13
280.15	H13
280.20	H11
280.23	H13
280.24	H9
280.27	H14
280.34	H15
280.35	H15
280.36.006	H16
280.8001	H14
280.8021	H14
280.822405	H14
281.01	H9
281.147	H12
281.243	H10
281.270	H10
281.401	H12
281.454	H12
281.648	H10
281.706	H11
2900.	A38, B6
2910.	A39, B7
2922.1730.	B8
2922.2842.	B18
2923.0570.	B9
2923.2099.	B10
2923.2162.	B11
2923.2312.	B12
2923.2343.	B13
2923.2363.	B14
2923.2379.	B15
2923.2436.	B16
2923.2767.	B17
2923.2842.	B19
2925.	B20
2960.30.	D190
2960.44.45.	D208
2960.54.45.	D210
2960.70.	D192
2960.71.	D186
2960.72.	D184
2960.73.	D222
2960.74.	D204
2960.75.	D206
2960.76.	D196
2960.79.	D202
2960.80.	D203
2960.81.	D211
2960.85.	D194
2960.86.	D195
2960.87.	D188
2960.88.	D212
2960.89.	D223
2960.90.	D225
2960.91.	D226
2960.92.	D227
2960.93.	D214
2961.70.	D175
2961.71.	D171
2961.73.	D174
2961.74.	D177
2961.75.	D176
2961.76.	D172
2961.77.	D173
2961.78.	D180
2961.79.	D178
2961.79.45.	D182
2961.81.	D179
2961.81.45.	D183
2961.82.	D181
2962.70.	D228
2962.70.45.	D229
2962.71.	D230
2962.72.	D231
2962.73.	D232
2962.74.	D219
2962.75.	D215
2962.75.45.	D216
2962.76.	D217
2962.77.	D218
2962.78.	D198
2962.78.45.	D197
2962.79.	D220

Numerical Index

2962.80.	D221
2962.81.	D233
2962.82.	D234
2962.83.	D235
2962.84.45.	D200
2962.85.	D201
2963.70.	D239
2963.71.	D239
2963.72.	D240
2963.73.	D240
2963.80.	D243
2963.81.	D242
2963.82.	D237
2963.83.	D237
2963.84.	D238
2963.85.	D238
2964.77.	D236
2964.78.	D236
2965.80.	D248
2965.80.45.	D246
2965.81.	D244
2965.82.	D249
2965.82.45.	D247
2965.83.	D245
2966.72.	D224
2967.10.	L42
3100.04.	L13
3100.09.	L26
3110.11.	L25
3111.10.	L15
3111.20.	L16-19
3111.21.	L20-23
3111.31.	L24
3120.40.	L27
3120.42.	L28
3120.65.	L29
3120.70.	L34-35
3120.71.	L36-37
3131.40.	L38
3131.80.	L39
3202.12.	L14
3202.13.	L14
3300.10.	L12
3479.030.	L72
3479.032.	L73
3487.12.00300.	L74-75
3487.12.00500.	L76-77
3487.12.00750.	L78-79
3487.12.01000.	L80-81
3710.00.12.01	J15
3710.12.01	J14
3800.01.01.01.	L61
3820.10.	L60

FIBRO

Experience and expertise you can rely on FIBRO Quality Assurance



2000.500.008 GB 07/2002

FIBRO

Experience and expertise you can rely on FIBRO Quality Assurance

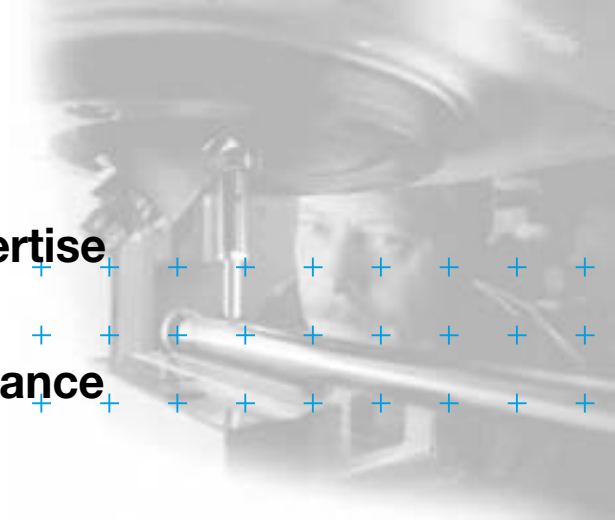

FIBRO is renowned for its quality world-wide. This high quality is achieved through our dedication and commitment to Quality Assurance.

FIBRO testing starts on the raw material and continues right through production to the completed product. The test facilities themselves are also subject to stringent continuous testing. Only by setting itself such stringent standards can a company support its customers long term in safety, cost-effectiveness and quality.



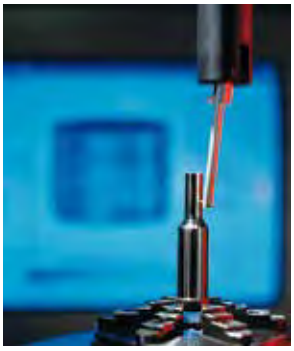

Tests during production

Precision shape and contour testing equipment is used directly in production. This ensures early confirmation of the quality of the product.

The shape testing equipment tests for qualities such as roundness, concentricity, straightness and rectangularity.

FIBRO state of the art technology provides 3D visualisation of concentricity, coaxiality and cylindricity.

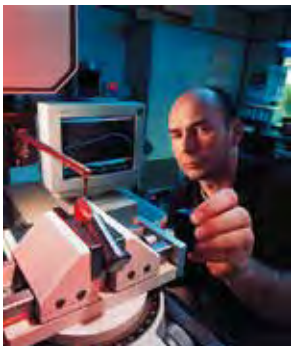

Materials testing - raw materials to specification

The FIBRO laboratories carry out microscopic investigation of the raw materials, including enlargement to 2,500 times natural size.

Spectral analysis determines whether the material is correct in terms of chemical composition.

Hardening – hardness testing

All the process parameters in the hardening process in our own hardening shop are recorded and documented.
Hardness testing is used to monitor the results of the hardening process on every batch.



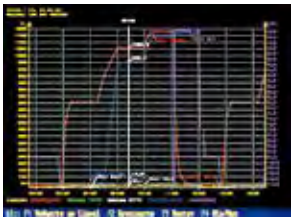

Final tests

For precision at micro level if certain basic requirements have to be met. It goes without saying that the temperature of the measuring room at FIBRO is kept at 20°C. Here the fine precision FIBRO products are measured after production before being released to the customer.







FIBRO GmbH · Standard Parts Division
Postfach 1120 · D-74851 Hassmersheim
T +49 6266-73-0* · **F** +49 6266-73-237

e-mail: info@fibro.de · **www.fibro.com**

A Die Sets

Cast iron, steel and aluminium die set press units
Lamination die set units, tooling pallet die sets

B Precision Ground Plates and Flat Bars

C Lifting and Clamping Devices

D Guide elements

E Ground Precision Components

F Springs

G Elastomer-Bars, -Sheets, -Sections

H FIBRO Chemical Tooling Aids

J Peripheral Equipment

K Cam Units

L Standard Parts for Mould Making



Cast Iron-, All-Steel- and Aluminium Die Sets

Cast Iron-, All-Steel- and Aluminium Die Sets and Plates Remarks and Guide Lines

Execution

Contour faces of FIBRO Steel Die Sets are fully machined. Contour faces of Aluminium Die Sets are sawn, as are those of Aluminium Plates. However, these contour faces can also be machined on request. To all die set plates, a general thickness tolerance of ± 2 mm applies.

Guide Elements

Guide pillars DIN 9825/ISO 9182 (209.19.) and headed guide bushes DIN 9831/ISO 9448 (2081.) are normal equipment on all-steel die sets.
Detailed information under Guide Elements.

Lifting Aids on Die Sets

Plate sizes with edges a1+b1 ^ 1000 mm, and die sets weighting more than 100 kg, are fitted with threaded holes for two lifter eyebolts per plate. Eyebolts etc. are supplied against special order.

Special Die Sets and Plates to Customers' Drawings

Die sets and plates up to size 22003 1100 mm (external dims.) will be made to customer's drawings, with any special features and highest precision.

Special Machining Features

Wherever possible, all larger apertures or holes should be done by FIBRO before final machining of die sets, for their application at the customer's works must result in die set distortion and impairment of accuracy.

Enquiry Forms for Special Die Sets

Special pre-printed forms for enquiries and ordering are available on request. All the customer has to do is the filling-in of dimensions and the specifying of guide elements or special machining features where applicable.

FIBRO

Contents

Notes on guide elements A7

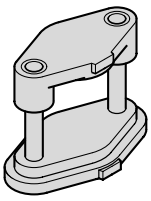

201.01. Die set DIN 9812 Type D/DG A10

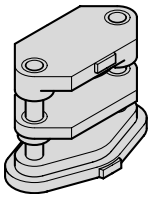

201.03. Die set DIN 9814 Type D/DG A11

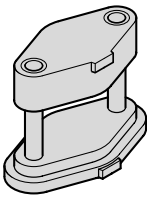

201.05. Die set DIN 9816 Shape D A12

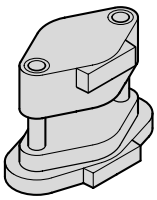

201.07. Die set ~DIN 9816 Shape D A13

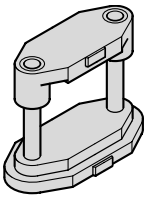

201.11. Die set DIN 9812 Shape C/CG A14

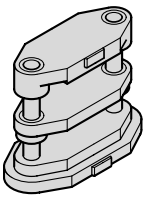

201.13. Die set DIN 9814 Shape C/CG A15

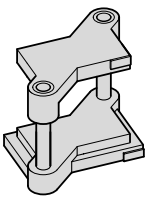

201.21. Die set DIN 9819 Shape C/CG A16

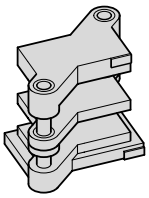

201.23. Die set A17

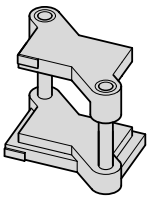

201.26. Die set A18

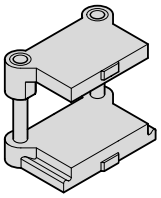

201.31. Die set DIN 9822 Shape C A19

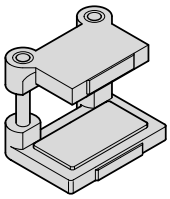

201.33. Die set A20

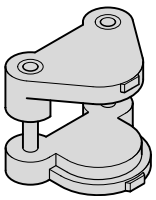

201.36. Die set A21

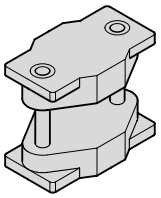

201.39. Fine blanking die set A22

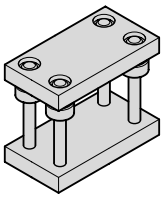

2010. Die set ~DIN 9868/ISO 11415 A24-31

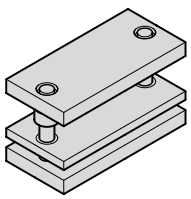

201.45. Die set to customers' specifications, Steel A32

Contents

201.65. A32

Die set to customers' specifications, Aluminium

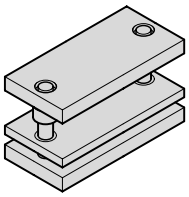

201.46. A33

Die set to customers' specifications, Steel

201.66. A33

Die set to customers' specifications, Aluminium

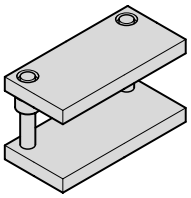

201.47. A34

Die set to customers' specifications, Steel

201.67. A34

Die set to customers' specifications, Aluminium

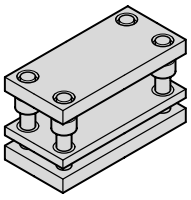

201.49. A35

Die set to costumers' specifications, Steel

201.69. A35

Die set to customers' specifications, Aluminium

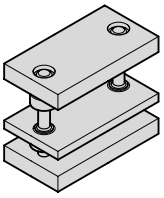

2010.55. A36-37

Die set ECO-LINE

2010.57. A36-37

Die set ECO-LINE

2010.59. A36-37

Die set ECO-LINE

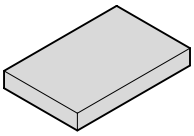

2900. A38

Steel plate ISO 6753-1

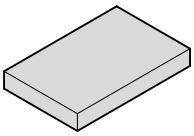

2910. A39

Aluminium plate ~ISO 6753-1

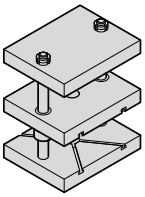

2011.45. A40

Die set press unit

2011.49. A40

Die set press unit

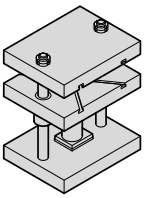

201.145. A41

Die set press unit

201.149. A41

Die set press unit

FIBRO

Contents

Die set press units - Accessories A42

212.16.1. Coupling spigot holder A42

212.11. Coupling spigot A42

212.15. Coupling spigot A42

Special die set to customer's specifications A43-46

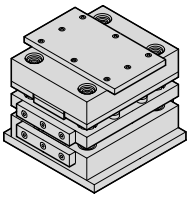

201.50. Progression lamination die set unit A47-52

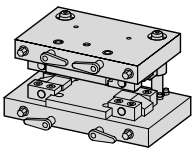

201.95. Tooling pallet die set A53-57

Tooling pallet die set - Accessories A58

201.96. Pallet carrier plate A58

201.97. Bolster insert plate A58

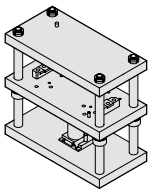

201.98. Aligning- and tryout press unit A59

Notes on Guide Elements

FIBRO Precision Sliding Guides – Carbonitrided Sintered Ferrite Bushes

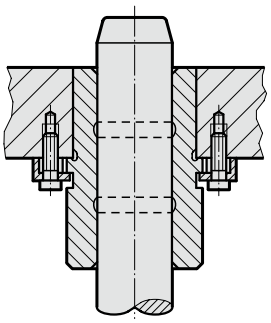

These guides employ bushes made from sintered ferrite of high purity with carbonitrided surface. Bearing surfaces are fine-ground.

The sintered ferrite has a porosity content of 18-20 % by volume, vacuum filled with special lubricant FIBROLIT LD. As additional long term lubrication it is recommended to fill up the grove in the bushing with FIBROLIT LD 280.34, see chapter H. Even under arduous running conditions, this material can be relied upon for good protection against oil film rupture.

Under no circumstances must molybdenum disulfite be added to the lubricant.

For bearing clearance ranges, see chapter D.

FIBRO Precision Sliding Guides, bronze-coated

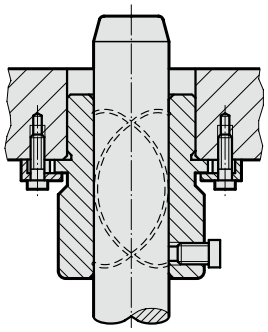

consists of a steel body with bronze-coated running surface with helical oil groove and a grease nipple for lubrication.

The steel body guarantees excellent resistance to breaking, even when subject to high loading at the edges.

FIBRO High Precision Ball Bearing Guides

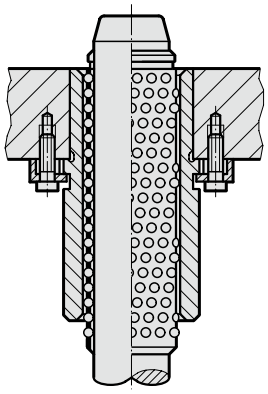

Careful manufacture at narrowest tolerances, and exactly the right amount of preloading* result in a play-free guide element of exceptional performance potential.
Our superfinished running surfaces further enhance the advantages of ball bearing guides.
Toolmakers favour ball bearing buides because of their free movement on the bench.

FIBRO ball bearing guides can be equipped with a choice of brass or aluminium ball cages, which have proved to be very successful in practice due to their ball density and stability

Ball bearing guides with their point contact of the balls remain somewhat sensitive to shock and sustained radial loads. To some extent, generous dimensioning of pillar diameters helps to compensate for this inherent disadvantage.

* Average preloading:
4 µm on pillars from 8 to 12 mm diameter
7– 9 µm on pillars from 15 to 16 mm diameter
9–11 µm on pillars from 18 to 42 mm diameter
11–13 µm on pillars from 50 to 80 mm diameter

FIBRO Precision Roller Guides

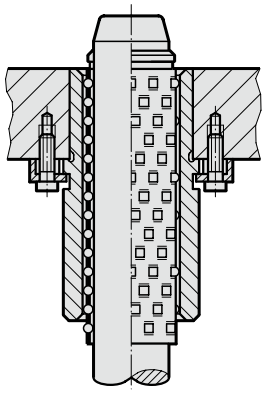

The profile roller cages are in linear contact with the guide bushing and guide pillar. This feature offers much greater capacity for radial loads in the individual roller than an identical size of ball bearing.

The caulking of the roller bearing arrangement is implemented with the same FIBRO-specific solution as that used in ball cages.

The profile rollers are arranged in a spiral formation in an axial direction. This gives each profile roller its own path. The roller cages are designed with a recess for a circlip conforming to DIN 471.

The much larger contact area with the ball bearing guide permits a significant reduction in preload values.

The following preload values apply to FIBRO Roller Guides:

For static loads/low velocities, pillar diameters		For Dynamic Loads/High Velocities, pillar diameters	
up to Ø 25	= 2,5 µm	up to Ø 25	= 1,5 µm
Ø 30/32	= 3 µm	Ø 30/32	= 2 µm
Ø 40-50	= 3,5 µm	Ø 40-50	= 2,5 µm
Ø 63	= 4 µm	Ø 63	= 3 µm

Use only pairing class
guide pillar red = .30
guide bush yellow = .10



Cast Iron Die Sets

Die set DIN 9812 Type D/DG



201.01.

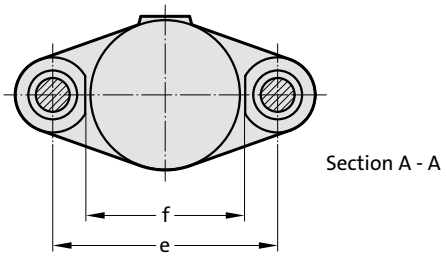

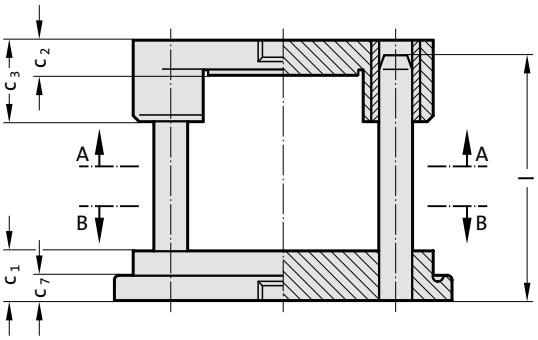

Guide Elements

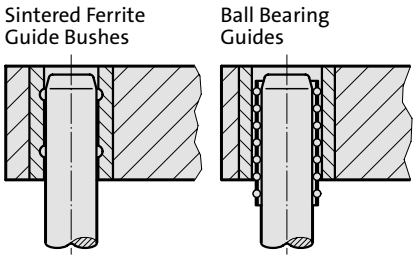

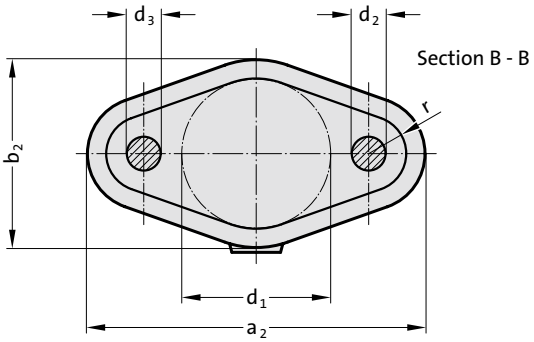

Order No (part II)
Available without or
with shank thread
in top bolster

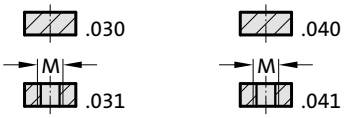

201.01. Die set DIN 9812 Type D/DG

Order No part 1*	Work area d_1	a_2	b_2	c_1	c_2	c_3	c_7	d_2	d_3	e	f	l	r	M
201.01.063.	63	182	100	40	25	60	20	16	15	106	73	140	20	16x1,5
201.01.080.	80	236	120	50	30	80	30	20	19	140	90	160	28	20x1,5
201.01.100.	100	275	140	50	30	80	30	25	24	165	110	160	35	20x1,5
201.01.125.	125	300	165	50	30	80	30	25	24	190	139	160	35	20x1,5
201.01.160.	160	360	200	56	40	90	30	32	30	240	174	180	40	24x1,5
201.01.180.	180	380	220	56	40	90	30	32	30	260	194	180	40	24x1,5
201.01.200.	200	400	240	56	40	90	30	32	30	280	218	180	40	24x1,5
201.01.250.	250	496	300	56	50	100	30	40	38	350	268	200	48	30x2
201.01.315.	315	563	365	63	50	100	30	40	38	417	333	224	48	30x2

*Order No Part 2 = complete guide type

Ordering Code (example):

Die set DIN 9812 Type D/DG		=201.01.
Work area D1	160 mm	= 160.
Guide elements FA	Sintered ferrite	= 03
Shank thread ZG	without	= 0
Order No		=201.01. 160.030

subject to alterations

Die set DIN 9814 Type D/DG

201.03.

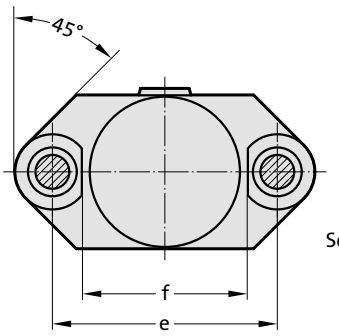

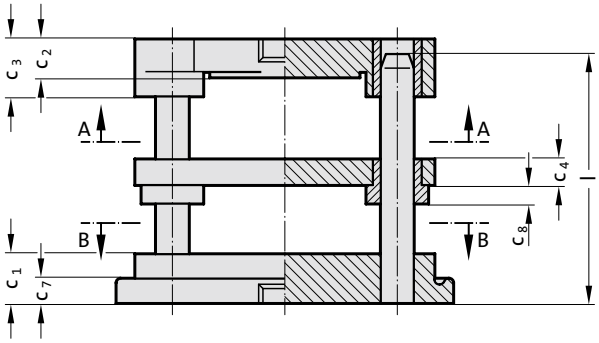

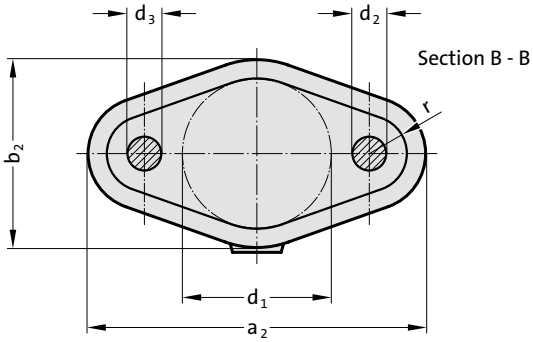



Guide Elements

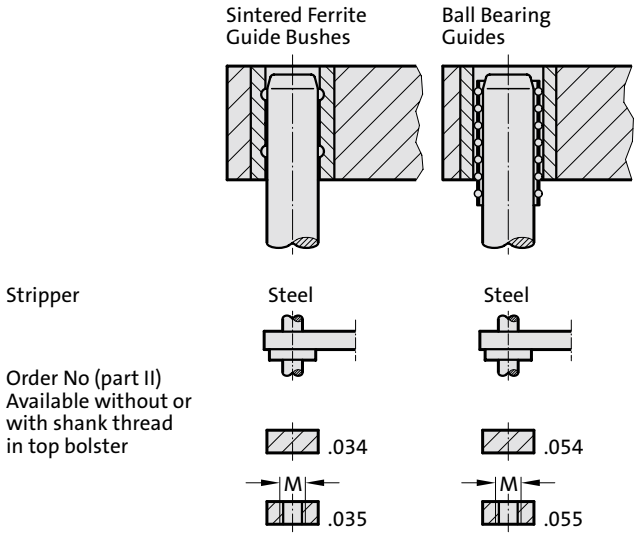

201.03. Die set DIN 9814 Type D/DG

Order No part 1*	Work area d_1	a_2	b_2	c_1	c_2	c_3	c_4	c_7	c_8	d_2	d_3	e	f	l	r	M
201.03.100.	100	275	140	50	30	50	22	30	18	25	24	165	119	160	35	20x1.5
201.03.125.	125	300	165	50	30	50	22	30	18	25	24	190	144	160	35	20x1.5
201.03.160.	160	360	200	56	40	60	27	30	18	32	30	240	184	180	40	24x1.5

*Order No Part 2 = complete guide type

Ordering Code (example):

Die set DIN 9814 Type D/DG		=201.03.
Work area D1	125 mm	= 125.
Guide elements FA	Sintered ferrite	= 03
Shank thread ZG	without	= 4
Order No		=201.03. 125.034

Die set DIN 9816 Shape D



201.05.

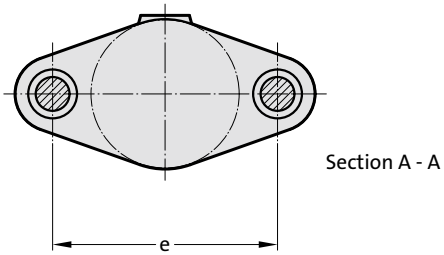

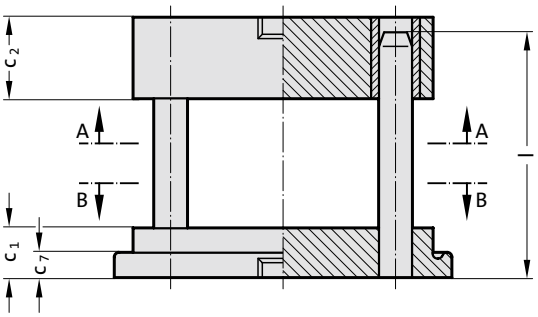

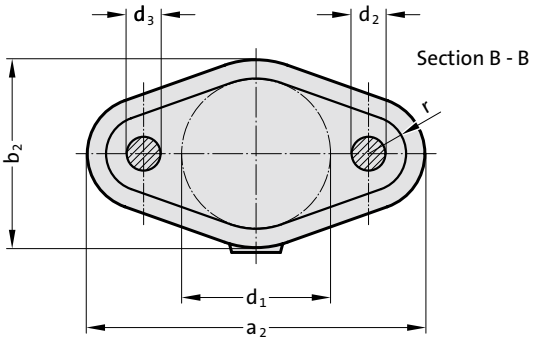

Guide Elements

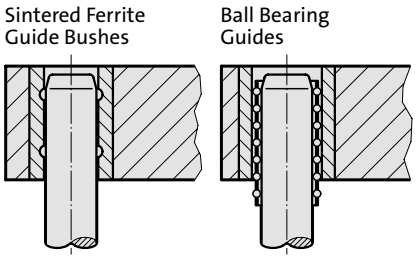

Order No (part II)
Without shank thread
in top bolster

.030 .040

201.05. Die set DIN 9816 Shape D

Order No part 1*	Work area d_1	a_2	b_2	c_1	c_2	c_7	d_2	d_3	e	l	r
201.05.063.	63	182	100	40	65	20	16	15	106	140	20
201.05.080.	80	236	120	50	70	30	20	19	140	160	28
201.05.100.	100	275	140	50	75	30	25	24	165	160	35
201.05.125.	125	300	165	50	80	30	25	24	190	160	35
201.05.160.	160	360	200	56	90	30	32	30	240	180	40
201.05.200.	200	400	240	56	100	30	32	30	280	180	40

*Order No Part 2 = complete guide type

Ordering Code (example):

Die set DIN 9816 Shape D		=201.05.
Work area D1	125 mm	= 125.
Guide elements FA	Sintered ferrite	= 030
Order No		=201.05. 125.030

subject to alterations

Die set ~DIN 9816 Shape D

201.07.

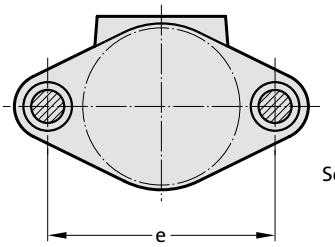

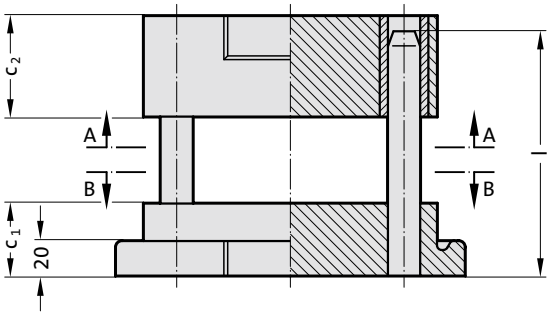

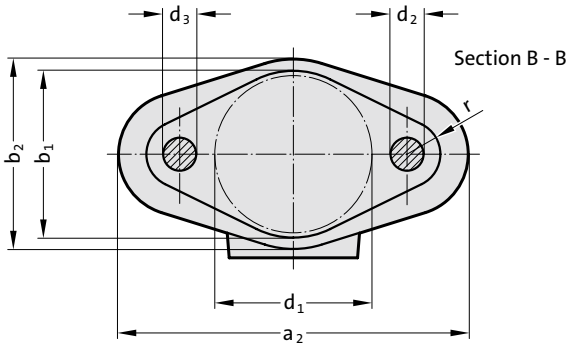

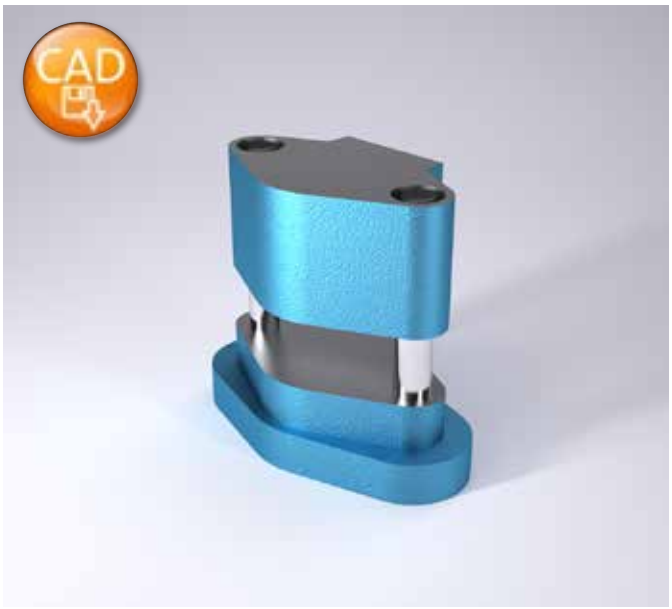

Guide Elements

Sintered Ferrite
Guide Bushes

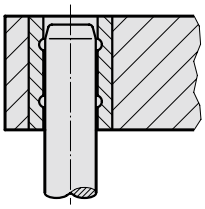

201.07. Die set ~DIN 9816 Shape D

Order No	Work area d_1	a_2	b_1	b_2	c_1	c_2	d_2	d_3	e	l	r
201.07.040.030	40	112	45	55	36	40	16	15	66	100	13
201.07.063.030	63	142	68	78	40	55	16	15	90	125	14

Die set DIN 9812 Shape C/CG



201.11.

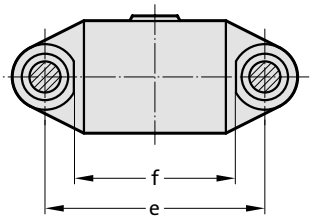

Section A - A

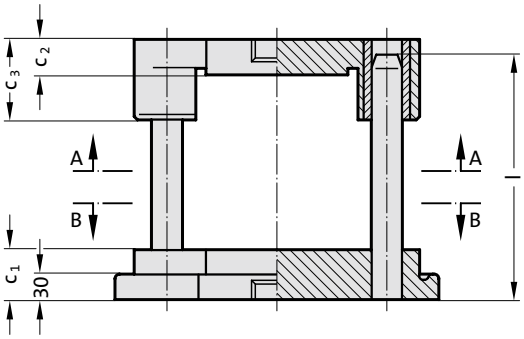

Guide Elements

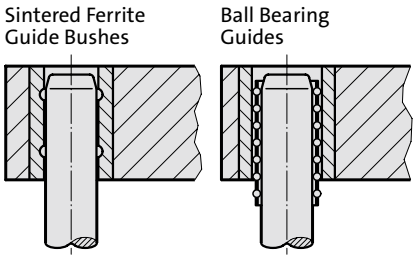

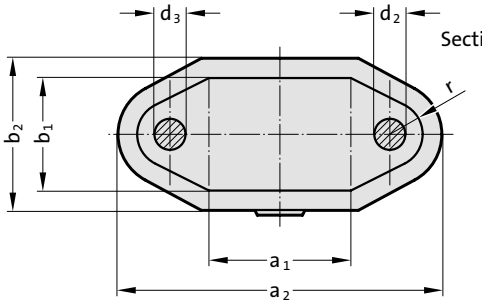

Section B - B

Order No (part II)
Available without or with shank thread in top bolster

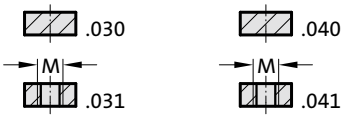

201.11. Die set DIN 9812 Shape C/CG

Order No part 1*	Work area a_1 x b_1	a_2	b_2	c_1	c_2	c_3	d_2	d_3	e	f	l	r	M
201.11.070.050.	70 x 50	170	70	40	22	50	20	19	110	73	140	20	20x1.5
201.11.080.063.	80 x 63	235	103	50	30	80	20	19	140	90	160	27	20x1.5
201.11.100.063.	100 x 63	253	103	50	30	80	20	19	158	110	160	27	20x1.5
201.11.100.080.	100 x 80	265	120	50	30	80	25	24	165	110	160	30	20x1.5
201.11.125.080.	125 x 80	290	120	50	30	80	25	24	190	139	160	30	20x1.5
201.11.160.080.	160 x 80	325	120	50	30	80	25	24	225	174	160	30	20x1.5
201.11.200.080.	200 x 80	365	120	50	30	80	25	24	265	218	160	30	20x1.5
201.11.125.100.	125 x 100	290	140	50	40	90	25	24	190	139	160	30	24x1.5
201.11.160.100.	160 x 100	325	140	50	40	90	25	24	225	174	160	30	24x1.5
201.11.200.100.	200 x 100	395	140	56	40	90	32	30	280	218	180	37	24x1.5
201.11.160.125.	160 x 125	355	165	56	40	90	32	30	240	174	180	37	24x1.5
201.11.200.125.	200 x 125	395	165	56	40	90	32	30	280	218	180	37	24x1.5
201.11.250.125.	250 x 125	445	165	56	40	90	32	30	330	268	180	37	24x1.5
201.11.315.125.	315 x 125	510	165	56	40	90	32	30	395	333	180	37	24x1.5
201.11.200.160.	200 x 160	395	200	56	50	100	32	30	280	218	200	37	30x2
201.11.250.160.	250 x 160	445	200	56	50	100	32	30	330	268	200	37	30x2
201.11.250.200.	250 x 200	496	250	63	50	100	40	38	350	268	224	48	30x2
201.11.315.200.	315 x 200	563	250	63	50	100	40	38	417	333	224	48	30x2
201.11.315.250.	315 x 250	563	300	63	50	100	40	38	417	333	224	48	30x2

*Order No Part 2 = complete guide type

subject to alterations

Die set DIN 9814 Shape C/CG

201.13.

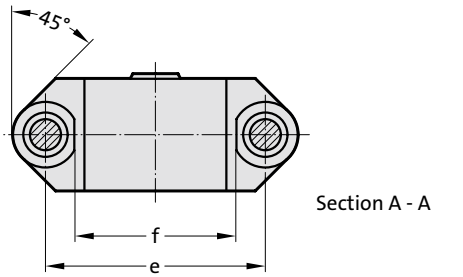

Section A - A

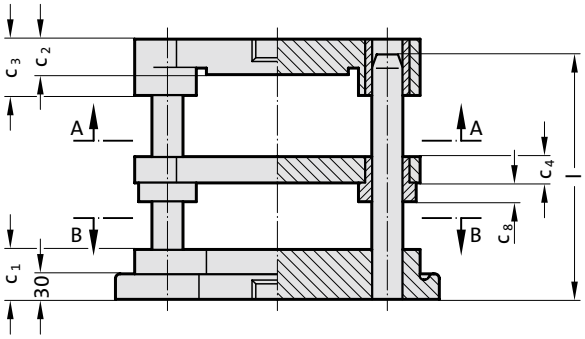

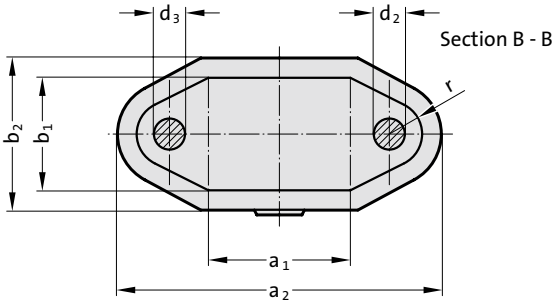

Section B - B



Guide Elements

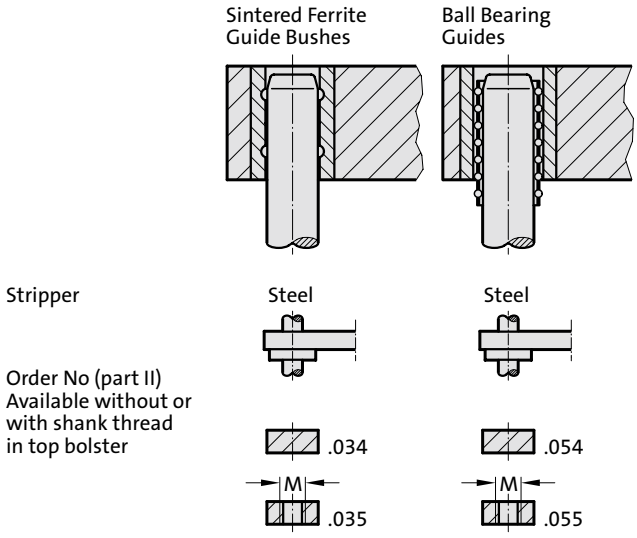

201.13. Die set DIN 9814 Shape C/CG

Order No part 1*	Work area a_1 x b_1	a_2	b_2	c_1	c_2	c_3	c_4	c_8	d_2	d_3	e	l	r	M
201.13.080.063.	80 x 63	235	103	50	30	50	18	14	20	19	140	160	27	20x1.5
201.13.100.080.	100 x 80	265	120	50	30	50	22	18	25	24	165	160	30	20x1.5
201.13.125.100.	125 x 100	290	140	50	40	60	22	18	25	24	190	160	30	24x1.5
201.13.160.125.	160 x 125	355	165	56	40	60	27	18	32	30	240	180	37	24x1.5
201.13.200.160.	200 x 160	395	200	56	50	70	27	18	32	30	280	200	37	30x2

*Order No Part 2 = complete guide type

Ordering Code (example):

Die set DIN 9814 Shape C/CG		=201.13.
Working area length A1	125 mm	= 125.
Working area width B1	100 mm	= 100.
Guide elements FA	Sintered ferrite	= 03
Shank thread ZG	without	= 4
Order No		=201.13. 125.100.034

Die set DIN 9819 Shape C/CG

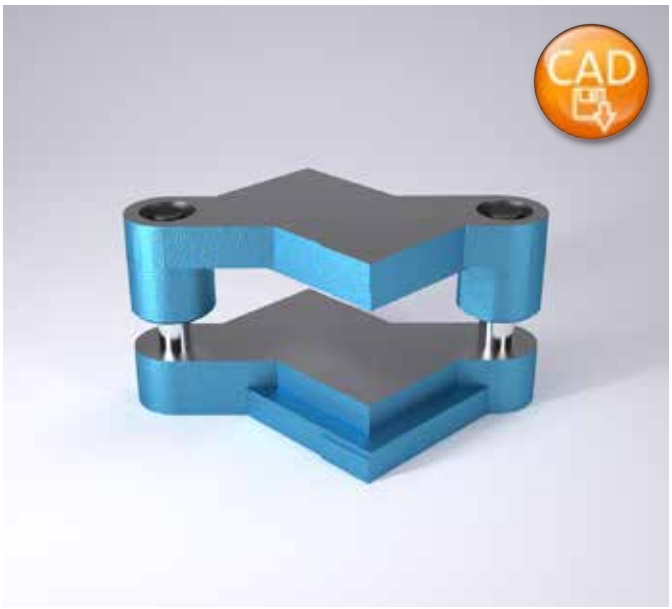

201.21.

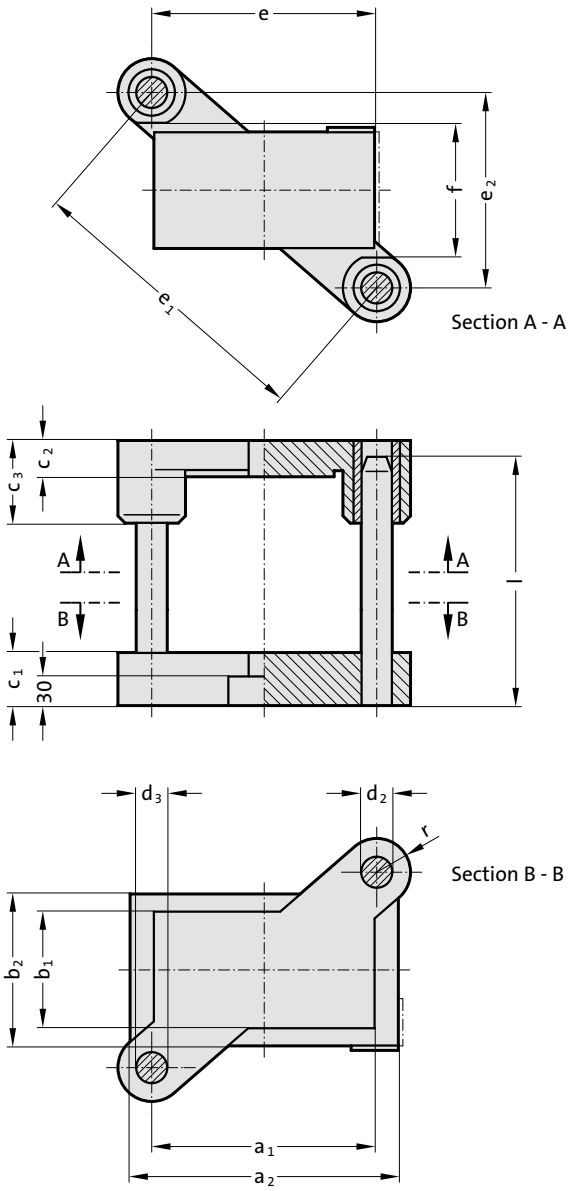

Guide Elements

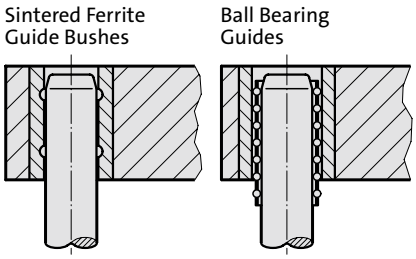

Order No (part II)
Available without or with shank thread in top bolster

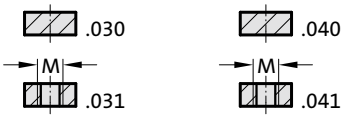

201.21. Die set DIN 9819 Shape C/CG

Order No part 1*	Work area a_1 x b_1	a_2	b_2	c_1	c_2	c_3	d_2	d_3	e	e_1	e_2	f	l	r	M
201.21.080.063.	80 x 63	120	103	50	30	80	20	19	80	145	121	73	160	27	20x1.5
201.21.100.063.	100 x 63	140	103	50	30	80	20	19	100	157	121	73	160	27	20x1.5
201.21.100.080.	100 x 80	140	120	50	30	80	25	24	100	175	144	90	160	30	20x1.5
201.21.125.080.	125 x 80	165	120	50	30	80	25	24	125	191	144	90	160	30	20x1.5
201.21.125.100.	125 x 100	165	140	50	40	90	25	24	125	206	164	110	160	30	24x1.5
201.21.160.100.	160 x 100	200	140	50	40	90	25	24	160	229	164	110	160	30	24x1.5
201.21.200.100.	200 x 100	240	140	56	40	90	32	30	200	268	179	110	180	37	24x1.5
201.21.160.125.	160 x 125	200	165	56	40	90	32	30	160	259	204	139	180	37	24x1.5
201.21.200.125.	200 x 125	240	165	56	40	90	32	30	200	286	204	139	180	37	24x1.5
201.21.250.125.	250 x 125	290	165	56	40	90	32	30	250	323	204	139	180	37	24x1.5
201.21.315.125.	315 x 125	355	165	56	40	90	32	30	315	375	204	139	180	37	24x1.5
201.21.200.160.	200 x 160	240	200	56	50	100	32	30	200	312	240	174	200	37	30x2
201.21.250.160.	250 x 160	290	200	56	50	100	32	30	250	346	240	174	200	37	30x2
201.21.250.200.	250 x 200	300	250	63	50	100	40	38	250	392	302	218	224	48	30x2
201.21.315.200.	315 x 200	365	250	63	50	100	40	38	315	436	302	218	224	48	30x2
201.21.315.250.	315 x 250	365	300	63	50	100	40	38	315	472	352	268	224	48	30x2

*Order No Part 2 = complete guide type

subject to alterations

Die set

201.23.

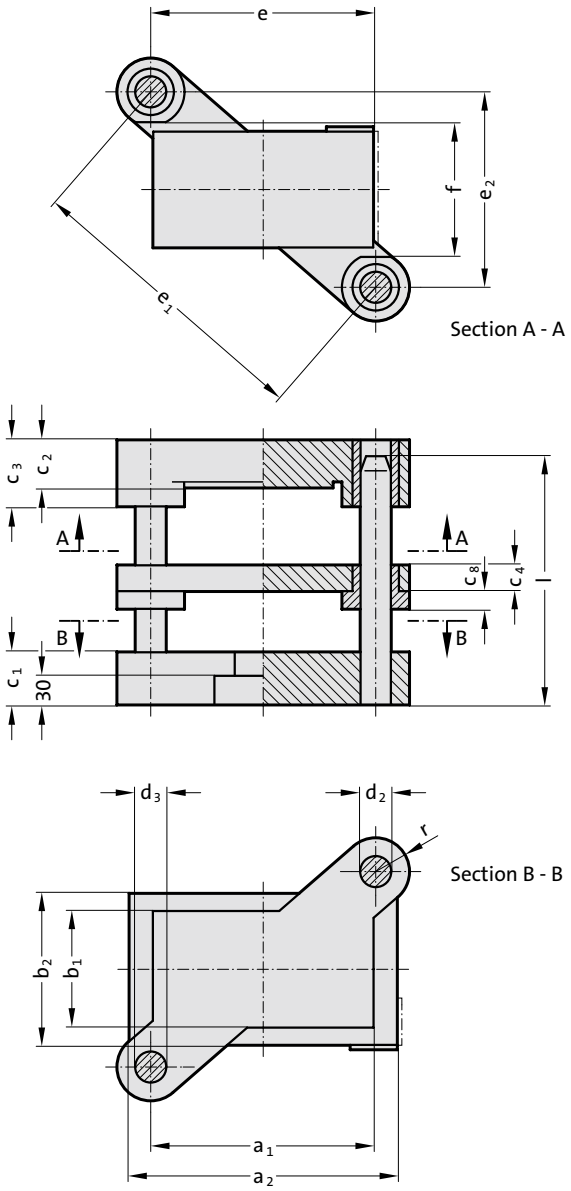

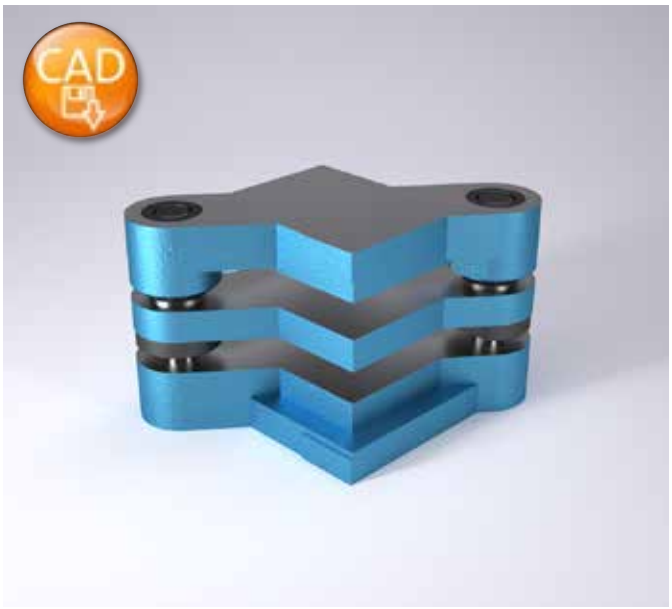

Guide Elements

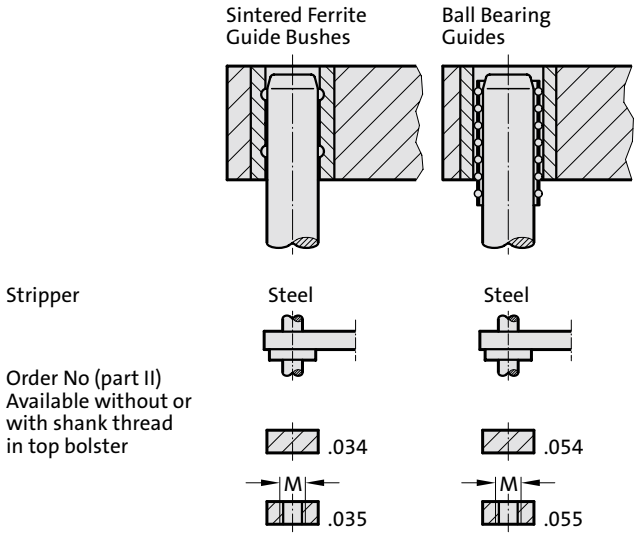

201.23. Die set

Order No part 1*	Work area a_1 x b_1	a_2	b_2	c_1	c_2	c_3	c_4	c_8	d_2	d_3	e	e_1	e_2	f	l	r	M
201.23.100.080.	100 x 80	140	120	50	30	50	22	15	25	24	100	175	144	98	160	30	20x1.5
201.23.125.100.	125 x 100	165	140	50	40	60	22	15	25	24	125	206	164	118	160	30	24x1.5
201.23.160.100.	160 x 100	200	140	50	40	60	22	15	25	24	160	229	164	118	160	30	24x1.5
201.23.160.125.	160 x 125	200	165	56	40	60	27	15	32	30	160	259	204	148	180	37	24x1.5
201.23.200.125.	200 x 125	240	165	56	40	60	27	15	32	30	200	286	204	148	180	37	24x1.5
201.23.250.160.	250 x 160	290	200	56	50	70	27	15	32	30	250	346	240	184	200	37	30x2

*Order No Part 2 = complete guide type

Ordering Code (example):

Die set		=201.23.
Working area length A1	160 mm	= 160.
Working area width B1	125 mm	= 125.
Guide elements FA	Sintered ferrite	= 03
Shank thread ZG	without	= 4
Order No		=201.23. 160.125.034

Die set

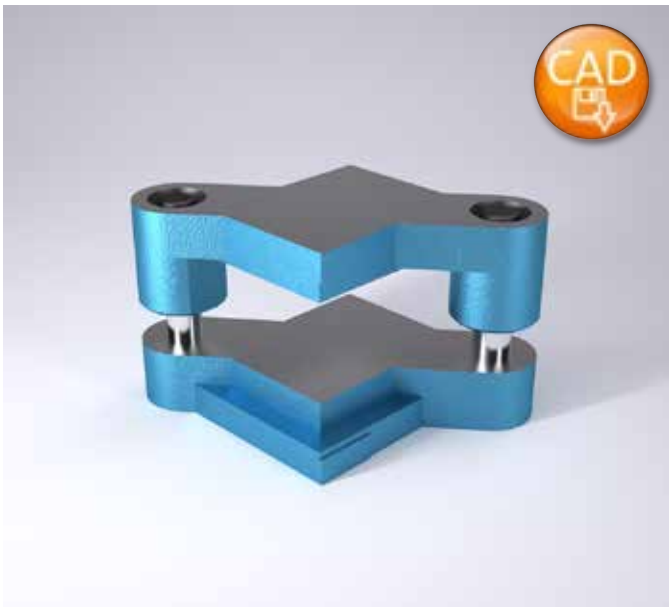

201.26.

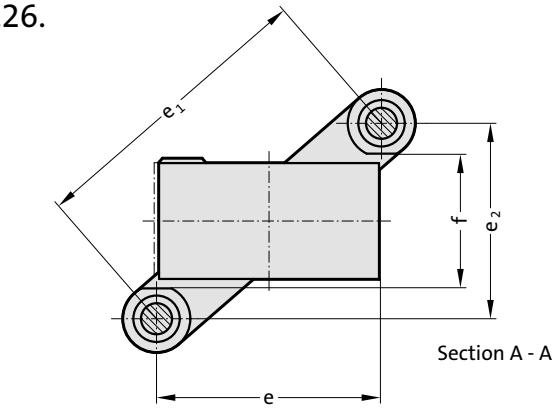

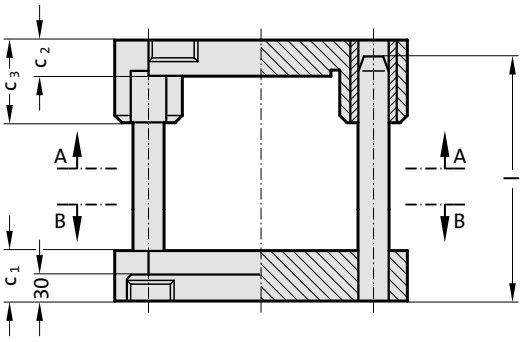

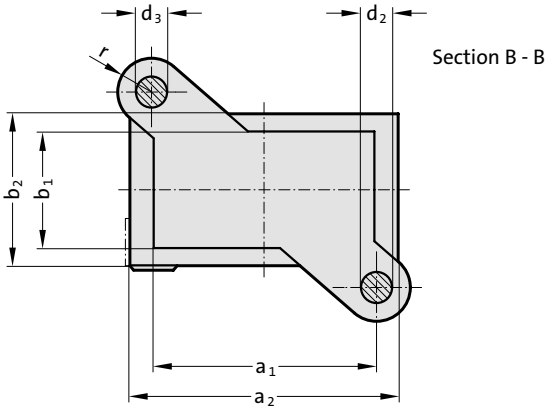

Guide Elements

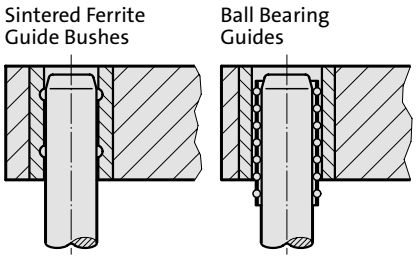

Order No (part II)
Available without or with shank thread in top bolster

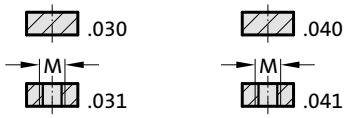

201.26. Die set

Order No part 1*	Work area a_1 x b_1	a_2	b_2	c_1	c_2	c_3	d_2	d_3	e	e_1	e_2	f	l	r	M
201.26.125.100.	125 x 100	165	140	50	40	90	25	24	125	206	164	110	160	30	24x1.5
201.26.160.100.	160 x 100	200	140	50	40	90	25	24	160	229	164	110	160	30	24x1.5
201.26.160.125.	160 x 125	200	165	56	40	90	32	30	160	259	204	139	180	37	24x1.5
201.26.200.125.	200 x 125	240	165	56	40	90	32	30	200	286	204	139	180	37	24x1.5
201.26.200.160.	200 x 160	240	200	56	50	100	32	30	200	312	240	174	200	37	30x2

*Order No Part 2 = complete guide type

Ordering Code (example):

Die set		=201.26.
Working area length A1	160 mm	= 160.
Working area width B1	125 mm	= 125.
Guide elements FA	Sintered ferrite	= 03
Shank thread ZG	without	= 0
Order No		=201.26. 160.125.030

subject to alterations

Die set DIN 9822 Shape C

201.31.

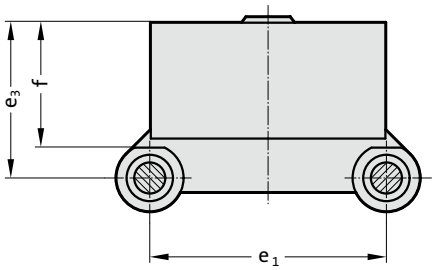

Section A - A

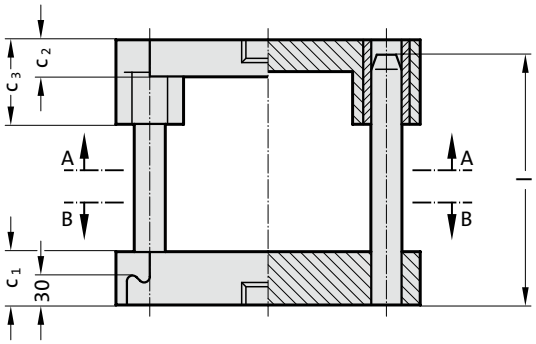

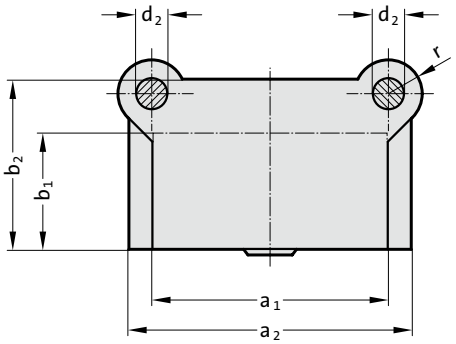

Section B - B

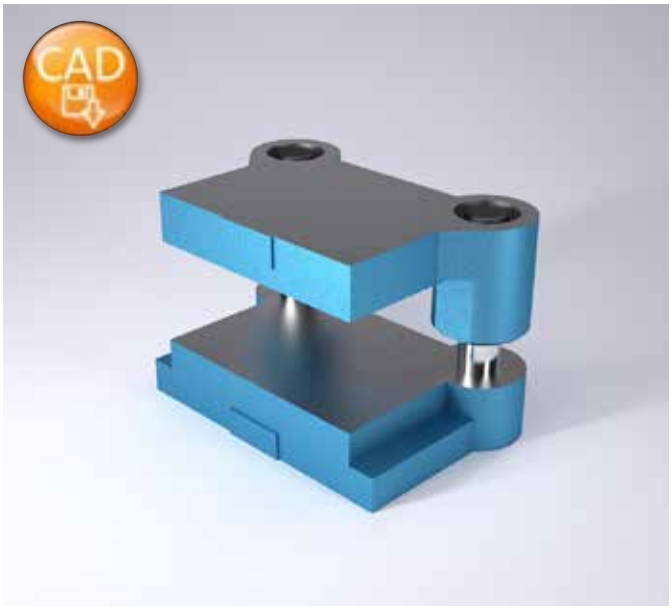

Guide Elements

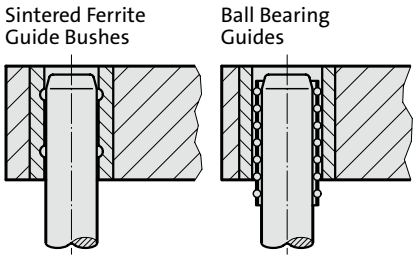

Order No (part II)
Without shank thread
in top bolster

.030 .040

201.31. Die set DIN 9822 Shape C

Order No part 1*	Work area a_1 x b_1	a_2	b_2	c_1	c_2	c_3	d_2	e_1	e_3	f	l	r
201.31.063.050.	63 x 50	95	84	40	25	50	20	72	77	55	140	22
201.31.080.063.	80 x 63	125	105	45	30	60	20	80	92	68	160	27
201.31.100.063.	100 x 63	145	105	45	30	60	20	100	92	68	160	27
201.31.100.080.	100 x 80	145	130	50	30	70	25	100	112	87	160	30
201.31.125.080.	125 x 80	170	130	50	30	70	25	125	112	87	160	30
201.31.160.080.	160 x 80	205	130	50	30	70	25	160	112	87	160	30
201.31.125.100.	125 x 100	170	150	56	40	90	32	125	140	107	180	37
201.31.160.100.	160 x 100	205	150	56	40	90	32	160	140	107	180	37
201.31.200.100.	200 x 100	245	150	56	40	90	32	200	140	107	180	37
201.31.160.125.	160 x 125	215	180	56	40	90	32	160	165	132	180	37
201.31.200.125.	200 x 125	255	180	56	40	90	32	200	165	132	180	37
201.31.250.125.	250 x 125	305	180	56	40	90	32	250	165	132	180	37
201.31.200.160.	200 x 160	255	225	63	50	120	40	200	210	167	224	48
201.31.250.160.	250 x 160	305	225	63	50	120	40	250	210	167	224	48
201.31.250.200.	250 x 200	305	270	63	50	120	50	250	260	207	224	56
201.31.315.250.	315 x 250	370	320	63	50	120	50	315	310	257	224	56

*Order No part 2 = complete guide type

Die set

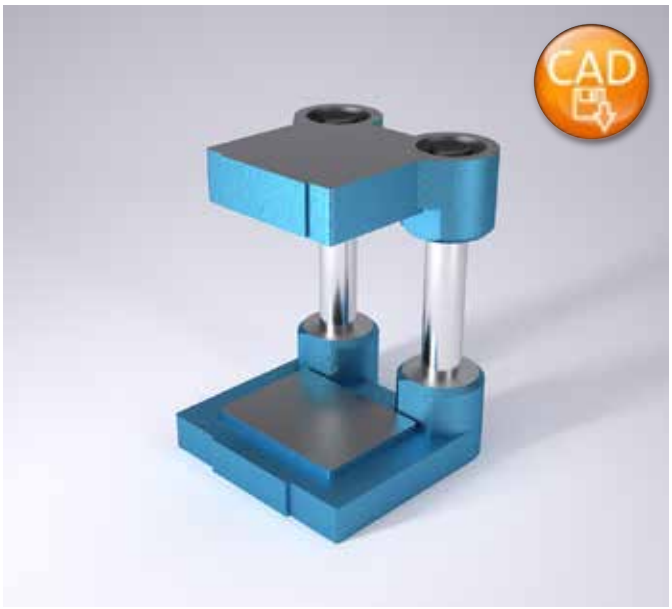

201.33.

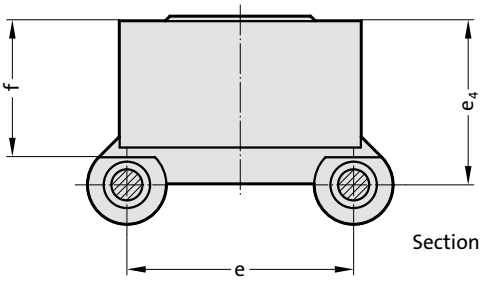

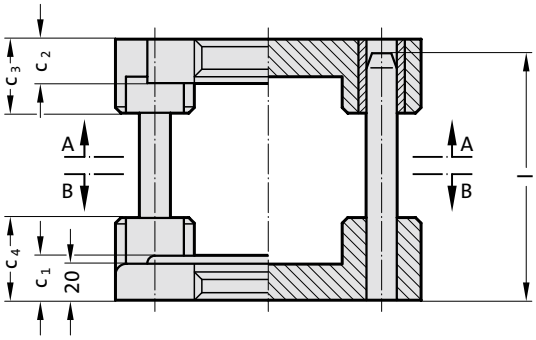

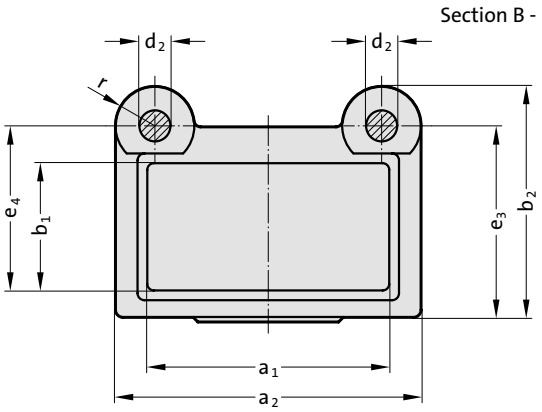

Guide Elements

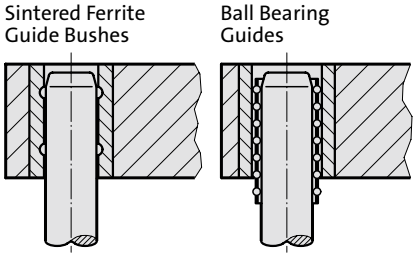

Order No (part II)
Without shank thread
in top bolster

.030 .040

201.33. Die set

Order No part 1*	Work area a_1 x b_1	a_2	b_2	c_1	c_2	c_3	c_4	d_2	e	e_3	e_4	f	l	r
201.33.063.050.	63 x 50	116	110	25	25	40	45	16	72	88	74	57	125	22
201.33.080.060.	80 x 60	116	117	25	25	40	45	20	72	95	81	62	160	22

*Order No Part 2 = complete guide type

Ordering Code (example):

Die set		=201.33.
Working area length A1	80 mm	= 080.
Working area width B1	60 mm	= 060.
Guide elements FA	Sintered ferrite	= 030
Order No		=201.33. 080.060.030

subject to alterations

Die set

201.36.

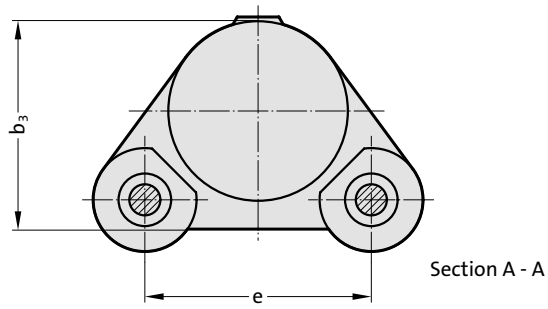

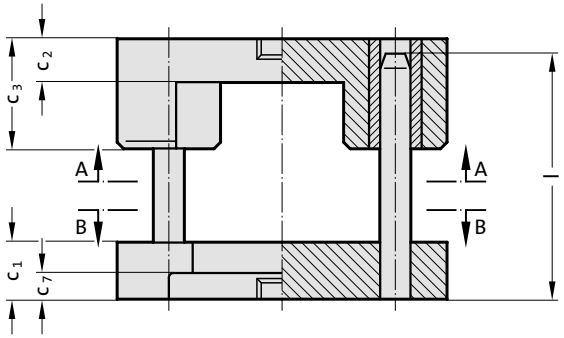

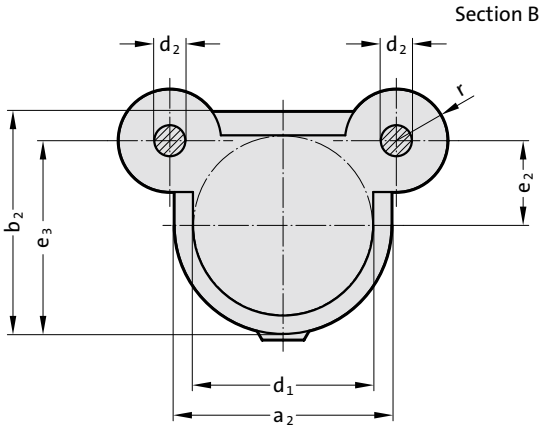



Guide Elements

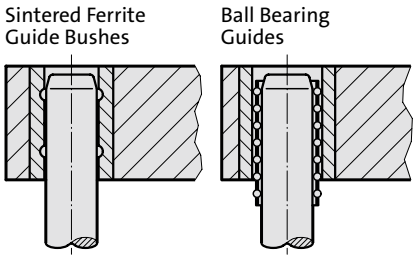

Order No (part II)
Without shank thread
in top bolster

.030 .040

201.36. Die set

Order No part 1*	Work area d_1	a_2	b_2	b_3	c_1	c_2	c_3	c_7	d_2	e	e_2	e_3	l	r
201.36.050.	50	80	80	65	40	30	50	25	20	66	33	73	125	20
201.36.063.	63	94	94	78	45	30	60	25	20	82	41	88	125	25
201.36.080.	80	110	110	95	50	30	70	30	25	105	52	107	160	30
201.36.100.	100	140	140	120	50	30	70	30	25	125	57	127	160	30
201.36.125.	125	166	166	145	56	40	90	30	32	157	73	156	180	38
201.36.160.	160	200	200	180	63	50	120	30	40	200	85	185	224	48
201.36.180.	180	220	220	200	63	50	120	30	40	224	90	200	224	48
201.36.200.	200	250	250	225	63	50	120	30	50	250	95	220	224	56
201.36.250.	250	300	300	275	63	50	120	30	50	300	120	270	224	56

*Order No Part 2 = complete guide type

Ordering Code (example):

Die set		=201.36.
Work area D1	125 mm	= 125.
Guide elements FA	Sintered ferrite	= 030
Order No		=201.36. 125.030

Fine blanking die set

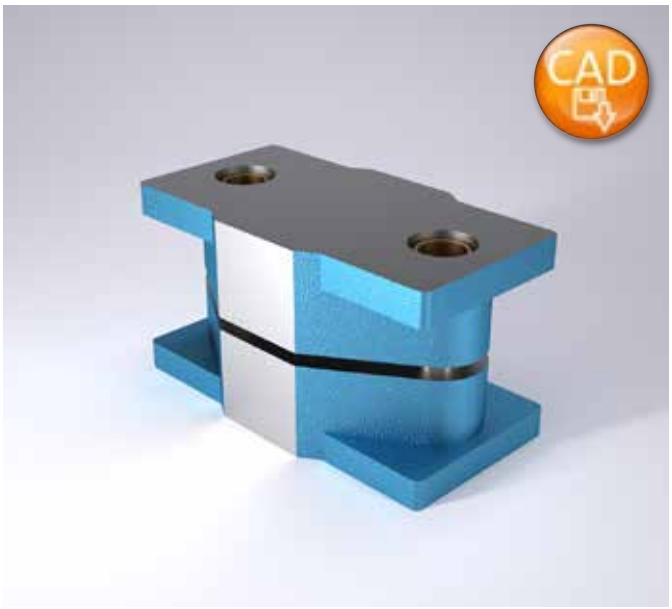

Guide Elements

Ball Bearing Guides

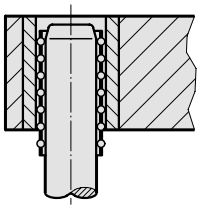

201.39.

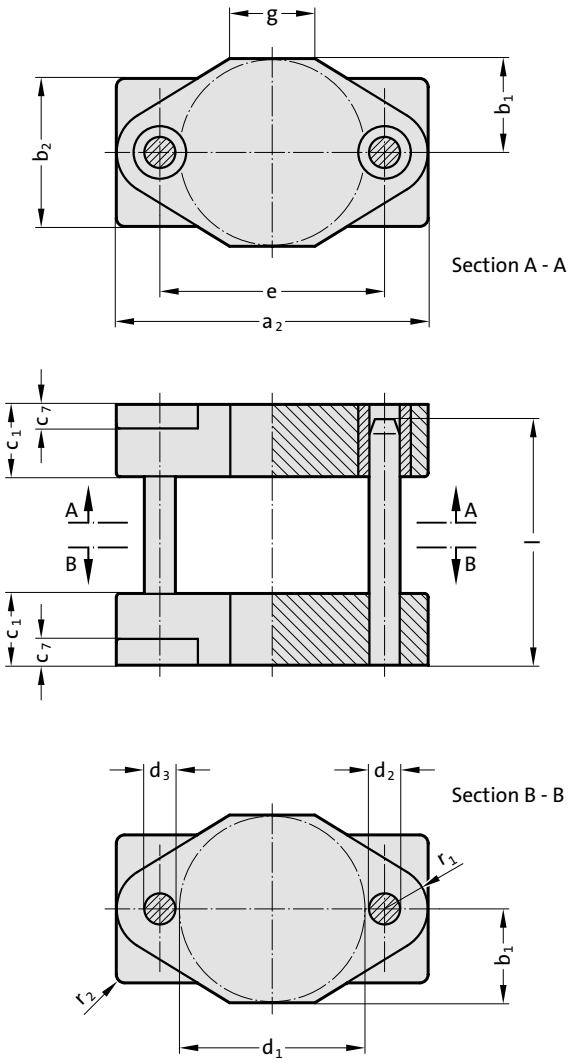

Faces front and rear fine machined after assembly – their perfect alignment permits use as datum reference.

201.39. Fine blanking die set

Order No	Work area d_1	a_2	b_1	b_2	c_1	c_7	d_2	d_3	G	e	l	r_1	r_2
201.39.100.040	100	220	50	85	75	22	25	24	60	140	140	27	6
201.39.125.040	125	245	62	100	75	25	25	24	80	165	140	27	6
201.39.160.040	160	290	80	140	75	25	32	30	80	200	140	35	6
201.39.200.040	200	340	100	160	80	30	40	38	90	250	160	45	8
201.39.250.040	250	400	125	200	85	32	40	38	100	300	180	50	10



All-Steel- and Aluminium Die Sets

Die set without stripper ~DIN 9868/ISO 11415



Standard Guide Systems

Headed Sintered Ferrite Bushes, carbonitrided = .834.

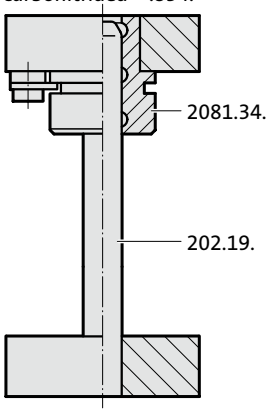

Headed Ball Bearing Bushes = .862.

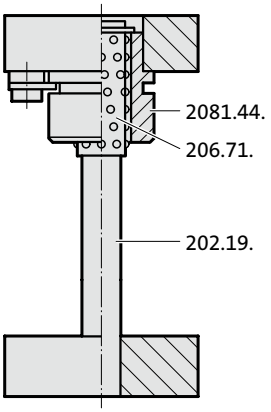

Description:

FIBRO Die Sets offer the choice between sintered ferrite sliding guides and those of the ball bearing type to DIN-ISO. Both come with headed guide bushes. These are seated in push-fit bolster bores and retained there by screw clamps.

Execution:

Steel: External contours milled, thickness surfaces ground
a_1 or $b_1 \leqq 630$ = +0,2/+0,4
a_1 or $b_1 > 630$ = +0,2/+0,6

Aluminium: External contours sawed, thickness surfaces ground
a_1 or b_1 = +1/+4

Advisory: Ordering Code:

Hole pattern for the screw clamps depends on positioning of working surface, determined by last part of the Order No,

for example: 2010.49.2520.4.862.1 : lengthwise
.2 : across

Note:

On request, Standard Die Sets can also be fitted with any other FIBRO Guide Elements (see die sets to customers' drawings).
FIBRO will furthermore supply die sets with special machining features.

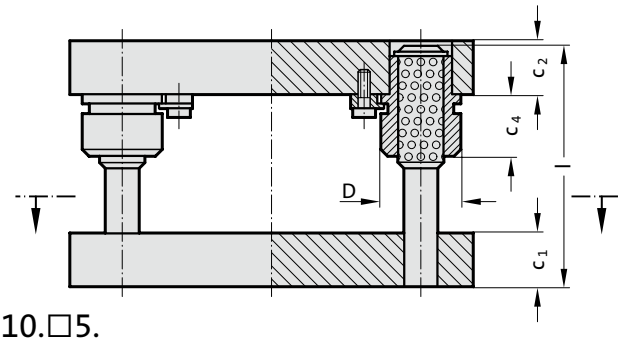

2010.□5.

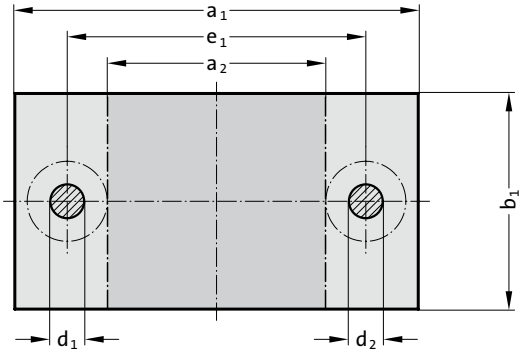

2010.□6.

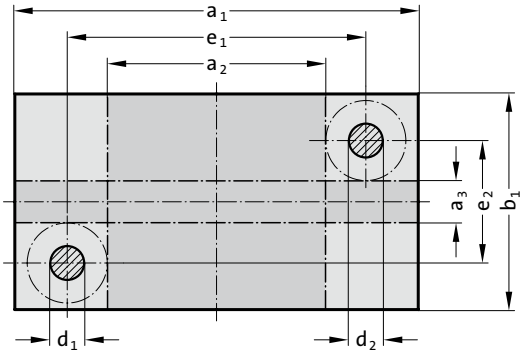

2010.□7.

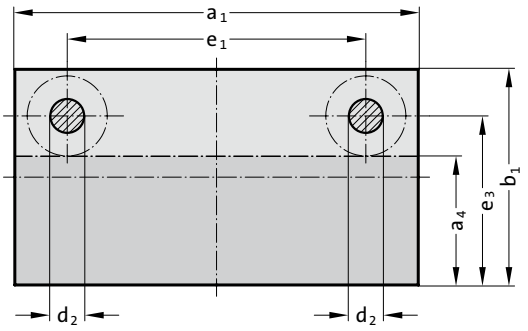

2010.□9.

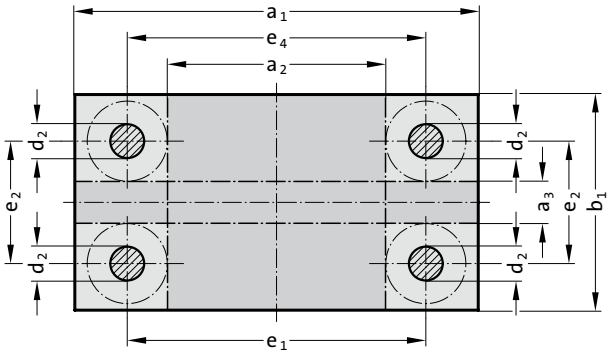

subject to alterations

Die set without stripper ~DIN 9868/ISO 11415

2010. □□ . Die set similar DIN 9868/ISO 11415 without stripper

Type

2010.□5.

2010.□6.

2010.□7.

2010.□9.

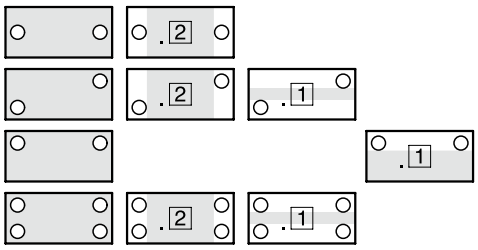

Ordering Code (principle):

2010 . 4 5 . 4025 . 1 . 862 . 2

- Position of work area: 2
- Guide system: Headed ball bearing bushes
- Thickness combinations P: c_1 - c_2
- External dimensions: a_1 = 400 × b_1 = 250
- Type: Position of guide elements
- Material: 4 = Steel, 6 = Aluminium
- Standard Die sets

Order No.	external dimensions $a_1 \times b_1$	work area across $a_2 \times b_1$	work area lengthwise $a_1 \times a_3$	work area lengthwise $a_1 \times a_4$	$c_{1\pm2}$	$c_{2\pm2}$	c_4 S	c_4 K	$d_1/d_2 \times l$	D	e_1	e_2	e_3	e_4
2010. .1608. 1. .	160 × 80	60 × 80	–	–	32	32	20	36	19/20 × 160	39	100	–	–	–
2010. .1610. 1. .	160 × 100	60 × 100	–	160 × 50	32	32	20	36	19/20 × 160	39	100	–	70	–
2010. .1612. 1. .	160 × 125	60 × 125	–	160 × 75	32	32	20	36	19/20 × 160	39	100	–	95	–
2010. .1616. 1. .	160 × 160	60 × 160	160 × 60	160 × 110	32	32	20	36	19/20 × 160	39	100	100	130	103
2010. .2010. 1. .	200 × 100	70 × 100	–	–	40	40	36	56	24/25 × 180	46	120	–	–	–
2010. .2010. 2. .	200 × 100	70 × 100	–	–	40	32	36	56	24/25 × 180	46	120	–	–	–
2010. .2010. 3. .	200 × 100	70 × 100	–	–	32	40	36	56	24/25 × 180	46	120	–	–	–
2010. .2010. 4. .	200 × 100	70 × 100	–	–	32	32	36	56	24/25 × 180	46	120	–	–	–
2010. .2012. 1. .	200 × 125	70 × 125	–	200 × 60	40	40	36	56	24/25 × 180	46	120	–	85	–
2010. .2012. 2. .	200 × 125	70 × 125	–	200 × 60	40	32	36	56	24/25 × 180	46	120	–	85	–
2010. .2012. 3. .	200 × 125	70 × 125	–	200 × 60	32	40	36	56	24/25 × 180	46	120	–	85	–
2010. .2012. 4. .	200 × 125	70 × 125	–	200 × 60	32	32	36	56	24/25 × 180	46	120	–	85	–
2010. .2016. 1. .	200 × 160	70 × 160	–	200 × 95	40	40	36	56	24/25 × 180	46	120	–	120	–
2010. .2016. 2. .	200 × 160	70 × 160	–	200 × 95	40	32	36	56	24/25 × 180	46	120	–	120	–
2010. .2016. 3. .	200 × 160	70 × 160	–	200 × 95	32	40	36	56	24/25 × 180	46	120	–	120	–
2010. .2016. 4. .	200 × 160	70 × 160	–	200 × 95	32	32	36	56	24/25 × 180	46	120	–	120	–
2010. .2020. 1. .	200 × 200	70 × 200	200 × 70	200 × 135	40	40	36	56	24/25 × 180	46	120	120	160	123
2010. .2020. 2. .	200 × 200	70 × 200	200 × 70	200 × 135	40	32	36	56	24/25 × 180	46	120	120	160	123
2010. .2020. 3. .	200 × 200	70 × 200	200 × 70	200 × 135	32	40	36	56	24/25 × 180	46	120	120	160	123
2010. .2020. 4. .	200 × 200	70 × 200	200 × 70	200 × 135	32	32	36	56	24/25 × 180	46	120	120	160	123
2010. .2512. 1. .	250 × 125	120 × 125	–	250 × 60	40	40	36	56	24/25 × 180	46	170	–	85	–
2010. .2512. 2. .	250 × 125	120 × 125	–	250 × 60	40	32	36	56	24/25 × 180	46	170	–	85	–
2010. .2512. 3. .	250 × 125	120 × 125	–	250 × 60	32	40	36	56	24/25 × 180	46	170	–	85	–
2010. .2512. 4. .	250 × 125	120 × 125	–	250 × 60	32	32	36	56	24/25 × 180	46	170	–	85	–
2010. .2516. 1. .	250 × 160	120 × 160	–	250 × 95	40	40	36	56	24/25 × 180	46	170	–	120	–
2010. .2516. 2. .	250 × 160	120 × 160	–	250 × 95	40	32	36	56	24/25 × 180	46	170	–	120	–
2010. .2516. 3. .	250 × 160	120 × 160	–	250 × 95	32	40	36	56	24/25 × 180	46	170	–	120	–
2010. .2516. 4. .	250 × 160	120 × 160	–	250 × 95	32	32	36	56	24/25 × 180	46	170	–	120	–
2010. .2520. 1. .	250 × 200	120 × 200	250 × 70	250 × 135	40	40	36	56	24/25 × 180	46	170	120	160	173
2010. .2520. 2. .	250 × 200	120 × 200	250 × 70	250 × 135	40	32	36	56	24/25 × 180	46	170	120	160	173
2010. .2520. 3. .	250 × 200	120 × 200	250 × 70	250 × 135	32	40	36	56	24/25 × 180	46	170	120	160	173
2010. .2520. 4. .	250 × 200	120 × 200	250 × 70	250 × 135	32	32	36	56	24/25 × 180	46	170	120	160	173
2010. .2525. 1. .	250 × 250	120 × 250	250 × 120	250 × 185	40	40	36	56	24/25 × 180	46	170	170	210	173
2010. .2525. 2. .	250 × 250	120 × 250	250 × 120	250 × 185	40	32	36	56	24/25 × 180	46	170	170	210	173
2010. .2525. 3. .	250 × 250	120 × 250	250 × 120	250 × 185	32	40	36	56	24/25 × 180	46	170	170	210	173
2010. .2525. 4. .	250 × 250	120 × 250	250 × 120	250 × 185	32	32	36	56	24/25 × 180	46	170	170	210	173
2010. .3116. 1. .	315 × 160	165 × 160	–	315 × 85	50	50	45	63	30/32 × 200	53	225	–	115	–
2010. .3116. 2. .	315 × 160	165 × 160	–	315 × 85	50	40	45	63	30/32 × 200	53	225	–	115	–
2010. .3116. 3. .	315 × 160	165 × 160	–	315 × 85	40	50	45	63	30/32 × 200	53	225	–	115	–
2010. .3116. 4. .	315 × 160	165 × 160	–	315 × 85	40	40	45	63	30/32 × 200	53	225	–	115	–
2010. .3120. 1. .	315 × 200	165 × 200	315 × 50	315 × 125	50	50	45	63	30/32 × 200	53	225	110	155	228
2010. .3120. 2. .	315 × 200	165 × 200	315 × 50	315 × 125	50	40	45	63	30/32 × 200	53	225	110	155	228
2010. .3120. 3. .	315 × 200	165 × 200	315 × 50	315 × 125	40	50	45	63	30/32 × 200	53	225	110	155	228
2010. .3120. 4. .	315 × 200	165 × 200	315 × 50	315 × 125	40	40	45	63	30/32 × 200	53	225	110	155	228
2010. .3125. 1. .	315 × 250	165 × 250	315 × 100	315 × 175	50	50	45	63	30/32 × 200	53	225	160	205	228
2010. .3125. 2. .	315 × 250	165 × 250	315 × 100	315 × 175	50	40	45	63	30/32 × 200	53	225	160	205	228
2010. .3125. 3. .	315 × 250	165 × 250	315 × 100	315 × 175	40	50	45	63	30/32 × 200	53	225	160	205	228
2010. .3125. 4. .	315 × 250	165 × 250	315 × 100	315 × 175	40	40	45	63	30/32 × 200	53	225	160	205	228
2010. .3131. 1. .	315 × 315	165 × 315	315 × 165	315 × 240	50	50	45	63	30/32 × 200	53	225	225	270	228
2010. .3131. 2. .	315 × 315	165 × 315	315 × 165	315 × 240	50	40	45	63	30/32 × 200	53	225	225	270	228
2010. .3131. 3. .	315 × 315	165 × 315	315 × 165	315 × 240	40	50	45	63	30/32 × 200	53	225	225	270	228
2010. .3131. 4. .	315 × 315	165 × 315	315 × 165	315 × 240	40	40	45	63	30/32 × 200	53	225	225	270	228
2010. .4020. 1. .	400 × 200	250 × 200	400 × 50	400 × 125	50	50	45	63	30/32 × 200	53	310	110	155	313
2010. .4020. 2. .	400 × 200	250 × 200	400 × 50	400 × 125	50	40	45	63	30/32 × 200	53	310	110	155	313
2010. .4020. 3. .	400 × 200	250 × 200	400 × 50	400 × 125	40	50	45	63	30/32 × 200	53	310	110	155	313
2010. .4020. 4. .	400 × 200	250 × 200	400 × 50	400 × 125	40	40	45	63	30/32 × 200	53	310	110	155	313
2010. .4025. 1. .	400 × 250	250 × 250	400 × 100	400 × 175	50	50	45	63	30/32 × 200	53	310	160	205	313
2010. .4025. 2. .	400 × 250	250 × 250	400 × 100	400 × 175	50	40	45	63	30/32 × 200	53	310	160	205	313
2010. .4025. 3. .	400 × 250	250 × 250	400 × 100	400 × 175	40	50	45	63	30/32 × 200	53	310	160	205	313
2010. .4025. 4. .	400 × 250	250 × 250	400 × 100	400 × 175	40	40	45	63	30/32 × 200	53	310	160	205	313
2010. .4031. 1. .	400 × 315	250 × 315	400 × 165	400 × 240	50	50	45	63	30/32 × 200	53	310	225	270	313
2010. .4031. 2. .	400 × 315	250 × 315	400 × 165	400 × 240	50	40	45	63	30/32 × 200	53	310	225	270	313

Die set without stripper ~DIN 9868/ISO 11415



Standard Guide Systems

Headed Sintered Ferrite Bushes, carbonitrided = .834.

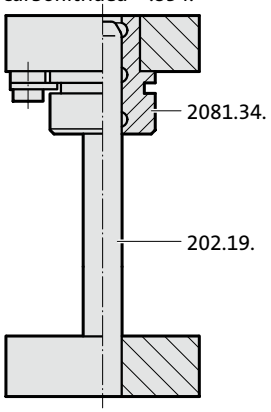

Headed Ball Bearing Bushes = .862.

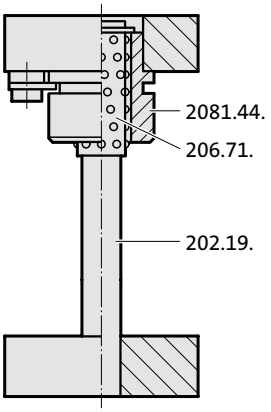

Description:

FIBRO Die Sets offer the choice between sintered ferrite sliding guides and those of the ball bearing type to DIN-ISO. Both come with headed guide bushes. These are seated in push-fit bolster bores and retained there by screw clamps.

Execution:

Steel: External contours milled, thickness surfaces ground
a_1 or $b_1 \leqq 630$ = +0,2/+0,4
a_1 or $b_1 > 630$ = +0,2/+0,6

Aluminium: External contours sawed, thickness surfaces ground
a_1 or b_1 = +1/+4

Advisory: Ordering Code:

Hole pattern for the screw clamps depends on positioning of working surface, determined by last part of the Order No,

for example: 2010.49.2520.4.862.1 : lengthwise
.2 : across

Note:

On request, Standard Die Sets can also be fitted with any other FIBRO Guide Elements (see die sets to customers' drawings).
FIBRO will furthermore supply die sets with special machining features.

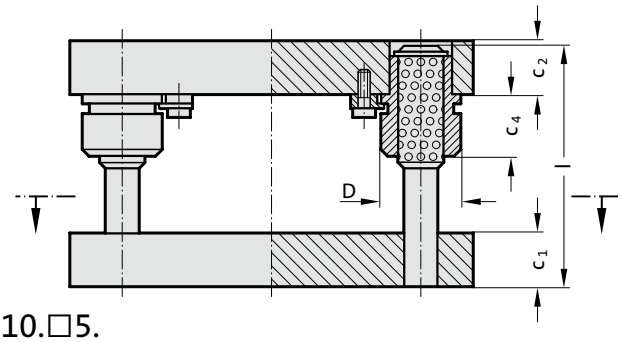

2010.□5.

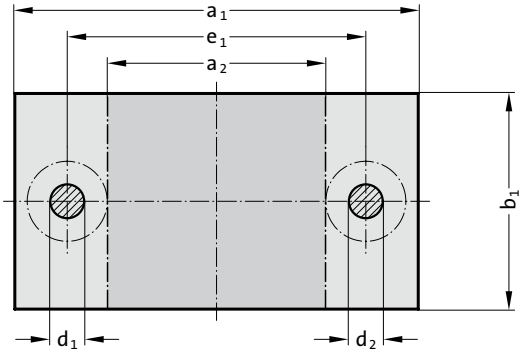

2010.□6.

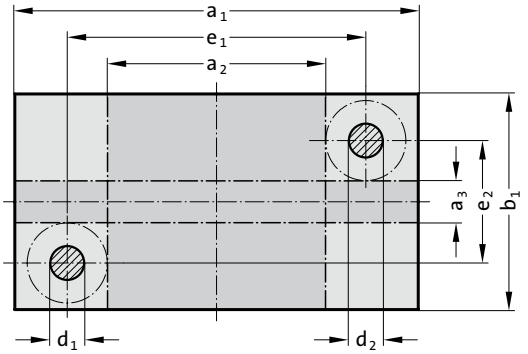

2010.□7.

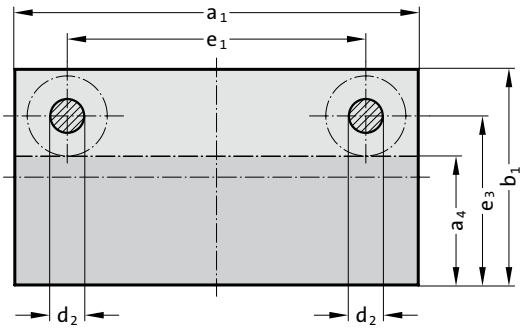

2010.□9.

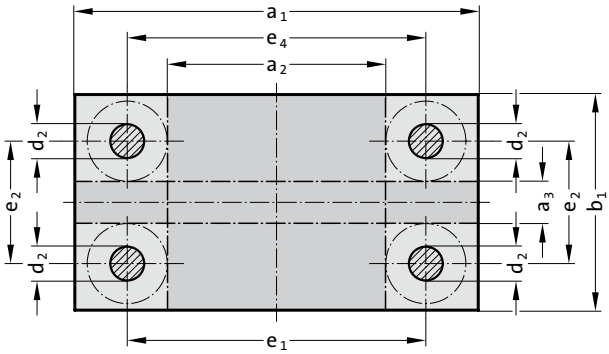

subject to alterations

Die set without stripper ~DIN 9868/ISO 11415

2010. □□ . Die set similar DIN 9868/ISO 11415 without stripper

Type

2010.□5.

2010.□6.

2010.□7.

2010.□9.

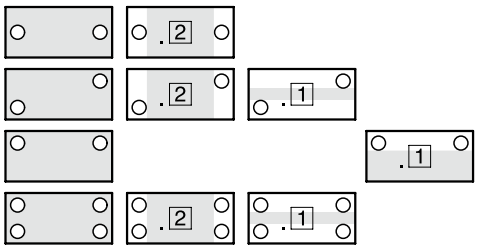

Ordering Code (principle):

2010 . 4 5 . 4025 . 1 . 862 . 2

- Position of work area: 2
- Guide system: Headed ball bearing bushes
- Thickness combinations P: c_1 - c_2
- External dimensions: a_1 = 400 × b_1 = 250
- Type: Position of guide elements
- Material: 4 = Steel, 6 = Aluminium
- Standard Die sets

Order No.	external dimensions $a_1 \times b_1$	work area across $a_2 \times b_1$	work area lengthwise $a_1 \times a_3$	work area lengthwise $a_1 \times a_4$	$c_{1\pm2}$	$c_{2\pm2}$	c_4 S	c_4 K	$d_1/d_2 \times l$	D	e_1	e_2	e_3	e_4
2010. .4031. 3. .	400 × 315	250 × 315	400 × 165	400 × 240	40	50	45	63	30/32 × 200	53	310	225	270	313
2010. .4031. 4. .	400 × 315	250 × 315	400 × 165	400 × 240	40	40	45	63	30/32 × 200	53	310	225	270	313
2010. .4040. 1. .	400 × 400	250 × 400	400 × 250	400 × 325	50	50	45	63	30/32 × 200	53	310	310	355	313
2010. .4040. 2. .	400 × 400	250 × 400	400 × 250	400 × 325	50	40	45	63	30/32 × 200	53	310	310	355	313
2010. .4040. 3. .	400 × 400	250 × 400	400 × 250	400 × 325	40	50	45	63	30/32 × 200	53	310	310	355	313
2010. .4040. 4. .	400 × 400	250 × 400	400 × 250	400 × 325	40	40	45	63	30/32 × 200	53	310	310	355	313
2010. .5025. 1. .	500 × 250	330 × 250	500 × 80	500 × 165	50	50	45	71	38/40 × 200	63	400	150	200	403
2010. .5025. 2. .	500 × 250	330 × 250	500 × 80	500 × 165	50	40	45	71	38/40 × 200	63	400	150	200	403
2010. .5025. 3. .	500 × 250	330 × 250	500 × 80	500 × 165	40	50	45	71	38/40 × 200	63	400	150	200	403
2010. .5025. 4. .	500 × 250	330 × 250	500 × 80	500 × 165	40	40	45	71	38/40 × 200	63	400	150	200	403
2010. .5031. 1. .	500 × 315	330 × 315	500 × 145	500 × 230	50	50	45	71	38/40 × 200	63	400	215	265	403
2010. .5031. 2. .	500 × 315	330 × 315	500 × 145	500 × 230	50	40	45	71	38/40 × 200	63	400	215	265	403
2010. .5031. 3. .	500 × 315	330 × 315	500 × 145	500 × 230	40	50	45	71	38/40 × 200	63	400	215	265	403
2010. .5031. 4. .	500 × 315	330 × 315	500 × 145	500 × 230	40	40	45	71	38/40 × 200	63	400	215	265	403
2010. .5040. 1. .	500 × 400	330 × 400	500 × 230	500 × 315	50	50	45	71	38/40 × 200	63	400	300	350	403
2010. .5040. 2. .	500 × 400	330 × 400	500 × 230	500 × 315	50	40	45	71	38/40 × 200	63	400	300	350	403
2010. .5040. 3. .	500 × 400	330 × 400	500 × 230	500 × 315	40	50	45	71	38/40 × 200	63	400	300	350	403
2010. .5040. 4. .	500 × 400	330 × 400	500 × 230	500 × 315	40	40	45	71	38/40 × 200	63	400	300	350	403
2010. .5050. 1. .	500 × 500	330 × 500	500 × 330	500 × 415	50	50	45	71	38/40 × 200	63	400	400	450	403
2010. .5050. 2. .	500 × 500	330 × 500	500 × 330	500 × 415	50	40	45	71	38/40 × 200	63	400	400	450	403
2010. .5050. 3. .	500 × 500	330 × 500	500 × 330	500 × 415	40	50	45	71	38/40 × 200	63	400	400	450	403
2010. .5050. 4. .	500 × 500	330 × 500	500 × 330	500 × 415	40	40	45	71	38/40 × 200	63	400	400	450	403
2010. .6331. 1. .	630 × 315	430 × 315	630 × 115	630 × 215	63	63	50	80	48/50 × 250	77	510	195	255	513
2010. .6331. 2. .	630 × 315	430 × 315	630 × 115	630 × 215	63	50	50	80	48/50 × 250	77	510	195	255	513
2010. .6331. 3. .	630 × 315	430 × 315	630 × 115	630 × 215	50	63	50	80	48/50 × 224	77	510	195	255	513
2010. .6331. 4. .	630 × 315	430 × 315	630 × 115	630 × 215	50	50	50	80	48/50 × 224	77	510	195	255	513
2010. .6340. 1. .	630 × 400	430 × 400	630 × 200	630 × 300	63	63	50	80	48/50 × 250	77	510	280	340	513
2010. .6340. 2. .	630 × 400	430 × 400	630 × 200	630 × 300	63	50	50	80	48/50 × 250	77	510	280	340	513
2010. .6340. 3. .	630 × 400	430 × 400	630 × 200	630 × 300	50	63	50	80	48/50 × 224	77	510	280	340	513
2010. .6340. 4. .	630 × 400	430 × 400	630 × 200	630 × 300	50	50	50	80	48/50 × 224	77	510	280	340	513
2010. .6350. 1. .	630 × 500	430 × 500	630 × 300	630 × 400	63	63	50	80	48/50 × 250	77	510	380	440	513
2010. .6350. 2. .	630 × 500	430 × 500	630 × 300	630 × 400	63	50	50	80	48/50 × 250	77	510	380	440	513
2010. .6350. 3. .	630 × 500	430 × 500	630 × 300	630 × 400	50	63	50	80	48/50 × 224	77	510	380	440	513
2010. .6350. 4. .	630 × 500	430 × 500	630 × 300	630 × 400	50	50	50	80	48/50 × 224	77	510	380	440	513
2010. .6363. 1. .	630 × 630	430 × 630	630 × 430	630 × 530	63	63	50	80	48/50 × 250	77	510	510	570	513
2010. .6363. 2. .	630 × 630	430 × 630	630 × 430	630 × 530	63	50	50	80	48/50 × 250	77	510	510	570	513
2010. .6363. 3. .	630 × 630	430 × 630	630 × 430	630 × 530	50	63	50	80	48/50 × 224	77	510	510	570	513
2010. .6363. 4. .	630 × 630	430 × 630	630 × 430	630 × 530	50	50	50	80	48/50 × 224	77	510	510	570	513
2010. .7140. 1. .	710 × 400	510 × 400	710 × 200	710 × 300	63	63	50	80	48/50 × 250	77	590	280	340	593
2010. .7140. 2. .	710 × 400	510 × 400	710 × 200	710 × 300	63	50	50	80	48/50 × 250	77	590	280	340	593
2010. .7140. 3. .	710 × 400	510 × 400	710 × 200	710 × 300	50	63	50	80	48/50 × 224	77	590	280	340	593
2010. .7140. 4. .	710 × 400	510 × 400	710 × 200	710 × 300	50	50	50	80	48/50 × 224	77	590	280	340	593
2010. .7150. 1. .	710 × 500	510 × 500	710 × 300	710 × 400	63	63	50	80	48/50 × 250	77	590	380	440	593
2010. .7150. 2. .	710 × 500	510 × 500	710 × 300	710 × 400	63	50	50	80	48/50 × 250	77	590	380	440	593
2010. .7150. 3. .	710 × 500	510 × 500	710 × 300	710 × 400	50	63	50	80	48/50 × 224	77	590	380	440	593
2010. .7150. 4. .	710 × 500	510 × 500	710 × 300	710 × 400	50	50	50	80	48/50 × 224	77	590	380	440	593
2010. .7163. 1. .	710 × 630	510 × 630	710 × 430	710 × 530	63	63	50	80	48/50 × 250	77	590	510	570	593
2010. .7163. 2. .	710 × 630	510 × 630	710 × 430	710 × 530	63	50	50	80	48/50 × 250	77	590	510	570	593
2010. .7163. 3. .	710 × 630	510 × 630	710 × 430	710 × 530	50	63	50	80	48/50 × 224	77	590	510	570	593
2010. .7163. 4. .	710 × 630	510 × 630	710 × 430	710 × 530	50	50	50	80	48/50 × 224	77	590	510	570	593
2010. .8040. 1. .	800 × 400	600 × 400	800 × 200	800 × 300	63	63	50	80	48/50 × 250	77	680	280	340	683
2010. .8040. 2. .	800 × 400	600 × 400	800 × 200	800 × 300	63	50	50	80	48/50 × 250	77	680	280	340	683
2010. .8040. 3. .	800 × 400	600 × 400	800 × 200	800 × 300	50	63	50	80	48/50 × 224	77	680	280	340	683
2010. .8040. 4. .	800 × 400	600 × 400	800 × 200	800 × 300	50	50	50	80	48/50 × 224	77	680	280	340	683
2010. .8050. 1. .	800 × 500	600 × 500	800 × 300	800 × 400	63	63	50	80	48/50 × 250	77	680	380	440	683
2010. .8050. 2. .	800 × 500	600 × 500	800 × 300	800 × 400	63	50	50	80	48/50 × 250	77	680	380	440	683
2010. .8050. 3. .	800 × 500	600 × 500	800 × 300	800 × 400	50	63	50	80	48/50 × 224	77	680	380	440	683
2010. .8050. 4. .	800 × 500	600 × 500	800 × 300	800 × 400	50	50	50	80	48/50 × 224	77	680	380	440	683
2010. .8063. 1. .	800 × 630	600 × 630	800 × 430	800 × 530	63	63	50	80	48/50 × 250	77	680	510	570	683
2010. .8063. 2. .	800 × 630	600 × 630	800 × 430	800 × 530	63	50	50	80	48/50 × 250	77	680	510	570	683
2010. .8063. 3. .	800 × 630	600 × 630	800 × 430	800 × 530	50	63	50	80	48/50 × 224	77	680	510	570	683
2010. .8063. 4. .	800 × 630	600 × 630	800 × 430	800 × 530	50	50	50	80	48/50 × 224	77	680	510	570	683

Die set with stripper ~DIN 9868/ISO 11415



Standard Guide Systems

Headed Sintered Ferrite Bushes, carbonitrided = .835.

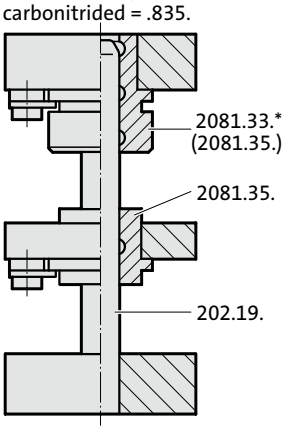

Headed Ball Bearing Bushes = .865.

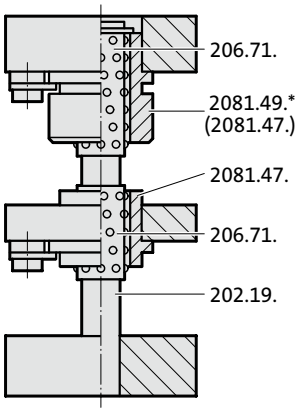

*up to size 2010.□□.1616. = 2081.35./2081.47.

Description:

FIBRO Die Sets offer the choice between sintered ferrite sliding guides and those of the ball bearing type to DIN-ISO. Both come with headed guide bushes. These are seated in push-fit bolster bores and retained there by screw clamps.

Execution:

Steel: External contours milled, thickness surfaces ground
a_1 or $b_1 \leqq 630$ = +0,2/+0,4
a_1 or $b_1 > 630$ = +0,2/+0,6

Aluminium: External contours sawed, thickness surfaces ground
a_1 or b_1 = +1/+4

Advisory: Ordering Code:

Hole pattern for the screw clamps depends on positioning of working surface, determined by last part of the Order No,

for example: 2010.49.2520.4.865.1 : lengthwise
.2 : across

Note:

On request, Standard Die Sets can also be fitted with any other FIBRO Guide Elements (see die sets to customers' drawings).
FIBRO will furthermore supply die sets with special machining features.

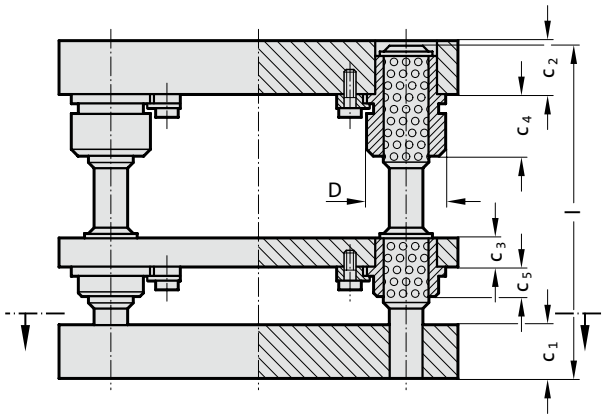

2010.□5.

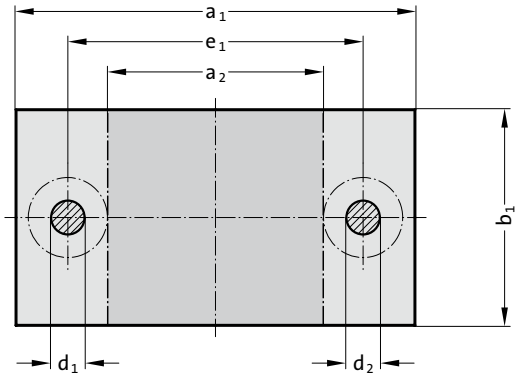

2010.□6.

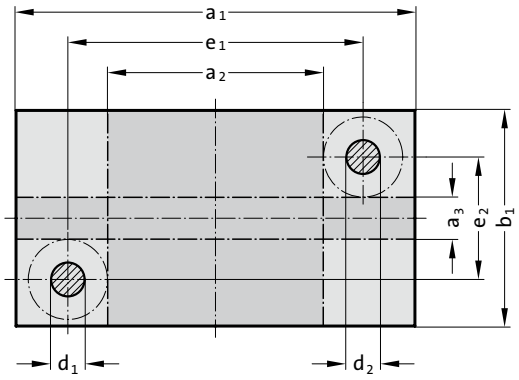

2010.□9.

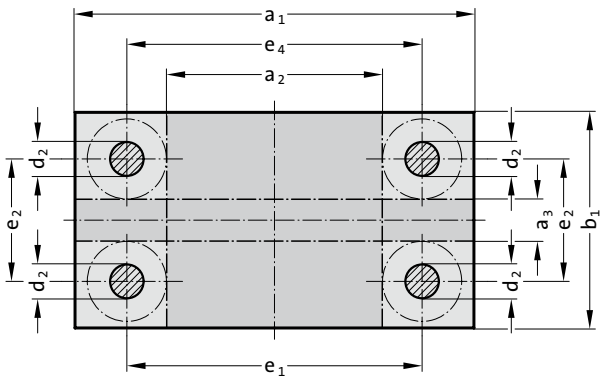

subject to alterations

Die set with stripper ~DIN 9868/ISO 11415

2010. □□ . Die set similar DIN 9868/ISO 11415 with stripper

Type 2010.□5.

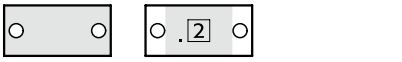

2010.□6.

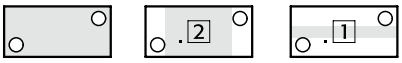

2010.□9.

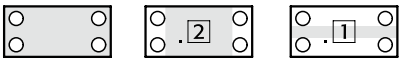

Ordering Code (principle):

2010 . 4 5 . 4025 . 1 . 835 . 2

- Position of work area: 2
- Guide system: Headed guide bushes, ferrite
- Thickness combinations P: c_1 - c_2
- External dimensions: a_1 = 400 × b_1 = 250
- Type: Position of guide elements
- Material: 4 = Steel, 6 = Aluminium
- Standard Die sets

Order No.	external dimensions $a_1 \times b_1$	work area across $a_2 \times b_1$	work area lengthwise $a_1 \times a_3$	$c_{1\pm2}$	$c_{2\pm2}$	$c_{3\pm2}$	c_4	c_5	$d_1/d_2 \times l$	D	e_1	e_2	e_4
2010. .1608. 1.	160 × 80	60 × 80	–	32	32	25	12	12	19/20 × 180	39	100	–	–
2010. .1610. 1.	160 × 100	60 × 100	–	32	32	25	12	12	19/20 × 180	39	100	–	–
2010. .1612. 1.	160 × 125	60 × 125	–	32	32	25	12	12	19/20 × 180	39	100	–	–
2010. .1616. 1.	160 × 160	60 × 160	160 × 60	32	32	25	12	12	19/20 × 180	39	100	100	103
2010. .2010. 1.	200 × 100	70 × 100	–	40	40	25	25	12	24/25 × 200	46	120	–	–
2010. .2010. 2.	200 × 100	70 × 100	–	40	32	25	25	12	24/25 × 200	46	120	–	–
2010. .2010. 3.	200 × 100	70 × 100	–	32	40	25	25	12	24/25 × 200	46	120	–	–
2010. .2010. 4.	200 × 100	70 × 100	–	32	32	25	25	12	24/25 × 200	46	120	–	–
2010. .2012. 1.	200 × 125	70 × 125	–	40	40	25	25	12	24/25 × 200	46	120	–	–
2010. .2012. 2.	200 × 125	70 × 125	–	40	32	25	25	12	24/25 × 200	46	120	–	–
2010. .2012. 3.	200 × 125	70 × 125	–	32	40	25	25	12	24/25 × 200	46	120	–	–
2010. .2012. 4.	200 × 125	70 × 125	–	32	32	25	25	12	24/25 × 200	46	120	–	–
2010. .2016. 1.	200 × 160	70 × 160	–	40	40	25	25	12	24/25 × 200	46	120	–	–
2010. .2016. 2.	200 × 160	70 × 160	–	40	32	25	25	12	24/25 × 200	46	120	–	–
2010. .2016. 3.	200 × 160	70 × 160	–	32	40	25	25	12	24/25 × 200	46	120	–	–
2010. .2016. 4.	200 × 160	70 × 160	–	32	32	25	25	12	24/25 × 200	46	120	–	–
2010. .2020. 1.	200 × 200	70 × 200	200 × 70	40	40	25	25	12	24/25 × 200	46	120	120	123
2010. .2020. 2.	200 × 200	70 × 200	200 × 70	40	32	25	25	12	24/25 × 200	46	120	120	123
2010. .2020. 3.	200 × 200	70 × 200	200 × 70	32	40	25	25	12	24/25 × 200	46	120	120	123
2010. .2020. 4.	200 × 200	70 × 200	200 × 70	32	32	25	25	12	24/25 × 200	46	120	120	123
2010. .2512. 1.	250 × 125	120 × 125	–	40	40	25	25	12	24/25 × 200	46	170	–	–
2010. .2512. 2.	250 × 125	120 × 125	–	40	32	25	25	12	24/25 × 200	46	170	–	–
2010. .2512. 3.	250 × 125	120 × 125	–	32	40	25	25	12	24/25 × 200	46	170	–	–
2010. .2512. 4.	250 × 125	120 × 125	–	32	32	25	25	12	24/25 × 200	46	170	–	–
2010. .2516. 1.	250 × 160	120 × 160	–	40	40	25	25	12	24/25 × 200	46	170	–	–
2010. .2516. 2.	250 × 160	120 × 160	–	40	32	25	25	12	24/25 × 200	46	170	–	–
2010. .2516. 3.	250 × 160	120 × 160	–	32	40	25	25	12	24/25 × 200	46	170	–	–
2010. .2516. 4.	250 × 160	120 × 160	–	32	32	25	25	12	24/25 × 200	46	170	–	–
2010. .2520. 1.	250 × 200	120 × 200	250 × 70	40	40	25	25	12	24/25 × 200	46	170	120	173
2010. .2520. 2.	250 × 200	120 × 200	250 × 70	40	32	25	25	12	24/25 × 200	46	170	120	173
2010. .2520. 3.	250 × 200	120 × 200	250 × 70	32	40	25	25	12	24/25 × 200	46	170	120	173
2010. .2520. 4.	250 × 200	120 × 200	250 × 70	32	32	25	25	12	24/25 × 200	46	170	120	173
2010. .2525. 1.	250 × 250	120 × 250	250 × 120	40	40	25	25	12	24/25 × 200	46	170	170	173
2010. .2525. 2.	250 × 250	120 × 250	250 × 120	40	32	25	25	12	24/25 × 200	46	170	170	173
2010. .2525. 3.	250 × 250	120 × 250	250 × 120	32	40	25	25	12	24/25 × 200	46	170	170	173
2010. .2525. 4.	250 × 250	120 × 250	250 × 120	32	32	25	25	12	24/25 × 200	46	170	170	173
2010. .3116. 1.	315 × 160	165 × 160	–	50	50	32	32	12	30/32 × 224	53	225	–	–
2010. .3116. 2.	315 × 160	165 × 160	–	50	40	32	32	12	30/32 × 224	53	225	–	–
2010. .3116. 3.	315 × 160	165 × 160	–	40	50	32	32	12	30/32 × 224	53	225	–	–
2010. .3116. 4.	315 × 160	165 × 160	–	40	40	32	32	12	30/32 × 224	53	225	–	–
2010. .3120. 1.	315 × 200	165 × 200	315 × 50	50	50	32	32	12	30/32 × 224	53	225	110	228
2010. .3120. 2.	315 × 200	165 × 200	315 × 50	50	40	32	32	12	30/32 × 224	53	225	110	228
2010. .3120. 3.	315 × 200	165 × 200	315 × 50	40	50	32	32	12	30/32 × 224	53	225	110	228
2010. .3120. 4.	315 × 200	165 × 200	315 × 50	40	40	32	32	12	30/32 × 224	53	225	110	228
2010. .3125. 1.	315 × 250	165 × 250	315 × 100	50	50	32	32	12	30/32 × 224	53	225	160	228
2010. .3125. 2.	315 × 250	165 × 250	315 × 100	50	40	32	32	12	30/32 × 224	53	225	160	228
2010. .3125. 3.	315 × 250	165 × 250	315 × 100	40	50	32	32	12	30/32 × 224	53	225	160	228
2010. .3125. 4.	315 × 250	165 × 250	315 × 100	40	40	32	32	12	30/32 × 224	53	225	160	228
2010. .3131. 1.	315 × 315	165 × 315	315 × 165	50	50	32	32	12	30/32 × 224	53	225	225	228
2010. .3131. 2.	315 × 315	165 × 315	315 × 165	50	40	32	32	12	30/32 × 224	53	225	225	228
2010. .3131. 3.	315 × 315	165 × 315	315 × 165	40	50	32	32	12	30/32 × 224	53	225	225	228
2010. .3131. 4.	315 × 315	165 × 315	315 × 165	40	40	32	32	12	30/32 × 224	53	225	225	228
2010. .4020. 1.	400 × 200	250 × 200	400 × 50	50	50	32	32	12	30/32 × 224	53	310	110	313
2010. .4020. 2.	400 × 200	250 × 200	400 × 50	50	40	32	32	12	30/32 × 224	53	310	110	313
2010. .4020. 3.	400 × 200	250 × 200	400 × 50	40	50	32	32	12	30/32 × 224	53	310	110	313
2010. .4020. 4.	400 × 200	250 × 200	400 × 50	40	40	32	32	12	30/32 × 224	53	310	110	313
2010. .4025. 1.	400 × 250	250 × 250	400 × 100	50	50	32	32	12	30/32 × 224	53	310	160	313
2010. .4025. 2.	400 × 250	250 × 250	400 × 100	50	40	32	32	12	30/32 × 224	53	310	160	313
2010. .4025. 3.	400 × 250	250 × 250	400 × 100	40	50	32	32	12	30/32 × 224	53	310	160	313
2010. .4025. 4.	400 × 250	250 × 250	400 × 100	40	40	32	32	12	30/32 × 224	53	310	160	313
2010. .4031. 1.	400 × 315	250 × 315	400 × 165	50	50	32	32	12	30/32 × 224	53	310	225	313
2010. .4031. 2.	400 × 315	250 × 315	400 × 165	50	40	32	32	12	30/32 × 224	53	310	225	313

Die set with stripper ~DIN 9868/ISO 11415



Standard Guide Systems

Headed Sintered Ferrite Bushes, carbonitrided = .835.

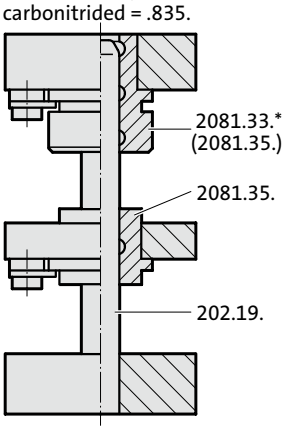

Headed Ball Bearing Bushes = .865.

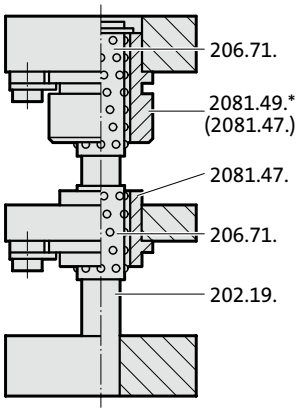

*up to size 2010.□□.1616. = 2081.35./2081.47.

Description:

FIBRO Die Sets offer the choice between sintered ferrite sliding guides and those of the ball bearing type to DIN-ISO. Both come with headed guide bushes. These are seated in push-fit bolster bores and retained there by screw clamps.

Execution:

Steel: External contours milled, thickness surfaces ground
a_1 or $b_1 \leqq 630$ = +0,2/+0,4
a_1 or $b_1 > 630$ = +0,2/+0,6

Aluminium: External contours sawed, thickness surfaces ground
a_1 or b_1 = +1/+4

Advisory: Ordering Code:

Hole pattern for the screw clamps depends on positioning of working surface, determined by last part of the Order No,

for example: 2010.49.2520.4.865.1 : lengthwise
.2 : across

Note:

On request, Standard Die Sets can also be fitted with any other FIBRO Guide Elements (see die sets to customers' drawings).
FIBRO will furthermore supply die sets with special machining features.

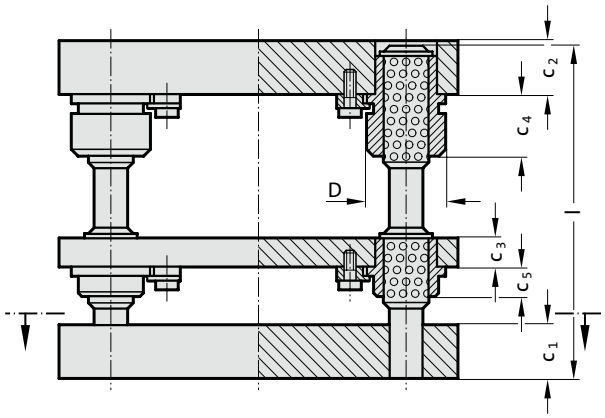

2010.□5.

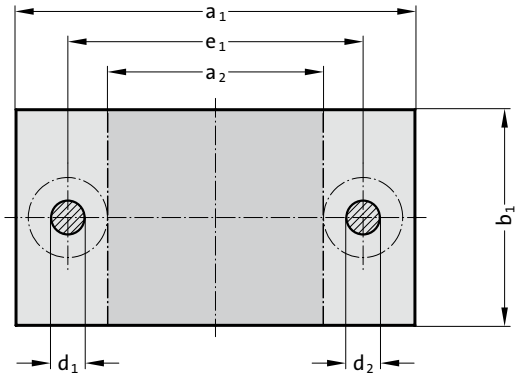

2010.□6.

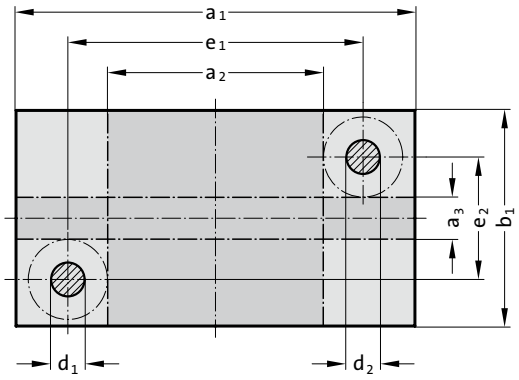

2010.□9.

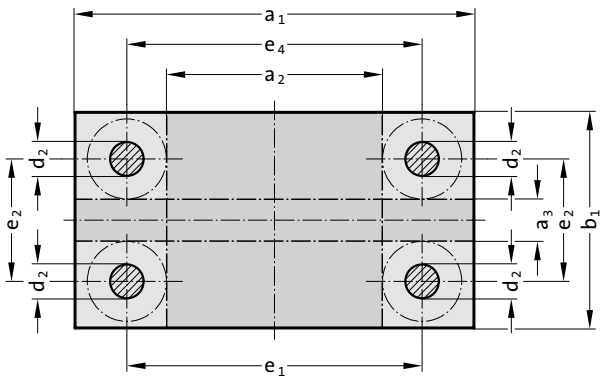

subject to alterations

Die set with stripper ~DIN 9868/ISO 11415

2010. □□ . Die set similar DIN 9868/ISO 11415 with stripper

Type 2010.□5.

2010.□6.

2010.□9.

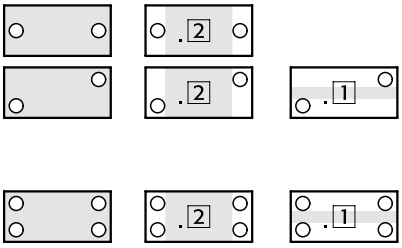

Ordering Code (principle):

2010 . 4 5 . 4025 . 1 . 835 . 2

- Position of work area: 2
- Guide system: Headed guide bushes, ferrite
- Thickness combinations P: c_1 - c_2
- External dimensions: a_1 = 400 × b_1 = 250
- Type: Position of guide elements
- Material: 4 = Steel, 6 = Aluminium
- Standard Die sets

Order No.	external dimensions $a_1 \times b_1$	work area across $a_2 \times b_1$	work area lengthwise $a_1 \times a_3$	$c_{1\pm2}$	$c_{2\pm2}$	$c_{3\pm2}$	c_4	c_5	$d_1/d_2 \times l$	D	e_1	e_2	e_4
2010. .4031. 3. .	400 × 315	250 × 315	400 × 165	40	50	32	32	12	30/32 × 224	53	310	225	313
2010. .4031. 4. .	400 × 315	250 × 315	400 × 165	40	40	32	32	12	30/32 × 224	53	310	225	313
2010. .4040. 1. .	400 × 400	250 × 400	400 × 250	50	50	32	32	12	30/32 × 224	53	310	310	313
2010. .4040. 2. .	400 × 400	250 × 400	400 × 250	50	40	32	32	12	30/32 × 224	53	310	310	313
2010. .4040. 3. .	400 × 400	250 × 400	400 × 250	40	50	32	32	12	30/32 × 224	53	310	310	313
2010. .4040. 4. .	400 × 400	250 × 400	400 × 250	40	40	32	32	12	30/32 × 224	53	310	310	313
2010. .5025. 1. .	500 × 250	330 × 250	500 × 80	50	50	32	32	15	38/40 × 224	63	400	150	403
2010. .5025. 2. .	500 × 250	330 × 250	500 × 80	50	40	32	32	15	38/40 × 224	63	400	150	403
2010. .5025. 3. .	500 × 250	330 × 250	500 × 80	40	50	32	32	15	38/40 × 224	63	400	150	403
2010. .5025. 4. .	500 × 250	330 × 250	500 × 80	40	40	32	32	15	38/40 × 224	63	400	150	403
2010. .5031. 1. .	500 × 315	330 × 315	500 × 145	50	50	32	32	15	38/40 × 224	63	400	215	403
2010. .5031. 2. .	500 × 315	330 × 315	500 × 145	50	40	32	32	15	38/40 × 224	63	400	215	403
2010. .5031. 3. .	500 × 315	330 × 315	500 × 145	40	50	32	32	15	38/40 × 224	63	400	215	403
2010. .5031. 4. .	500 × 315	330 × 315	500 × 145	40	40	32	32	15	38/40 × 224	63	400	215	403
2010. .5040. 1. .	500 × 400	330 × 400	500 × 230	50	50	32	32	15	38/40 × 224	63	400	300	403
2010. .5040. 2. .	500 × 400	330 × 400	500 × 230	50	40	32	32	15	38/40 × 224	63	400	300	403
2010. .5040. 3. .	500 × 400	330 × 400	500 × 230	40	50	32	32	15	38/40 × 224	63	400	300	403
2010. .5040. 4. .	500 × 400	330 × 400	500 × 230	40	40	32	32	15	38/40 × 224	63	400	300	403
2010. .5050. 1. .	500 × 500	330 × 500	500 × 330	50	50	32	32	15	38/40 × 224	63	400	400	403
2010. .5050. 2. .	500 × 500	330 × 500	500 × 330	50	40	32	32	15	38/40 × 224	63	400	400	403
2010. .5050. 3. .	500 × 500	330 × 500	500 × 330	40	50	32	32	15	38/40 × 224	63	400	400	403
2010. .5050. 4. .	500 × 500	330 × 500	500 × 330	40	40	32	32	15	38/40 × 224	63	400	400	403
2010. .6331. 1. .	630 × 315	430 × 315	630 × 115	63	63	40	36	18	48/50 × 280	77	510	195	513
2010. .6331. 2. .	630 × 315	430 × 315	630 × 115	63	50	40	36	18	48/50 × 280	77	510	195	513
2010. .6331. 3. .	630 × 315	430 × 315	630 × 115	50	63	40	36	18	48/50 × 250	77	510	195	513
2010. .6331. 4. .	630 × 315	430 × 315	630 × 115	50	50	40	36	18	48/50 × 250	77	510	195	513
2010. .6340. 1. .	630 × 400	430 × 400	630 × 200	63	63	40	36	18	48/50 × 280	77	510	280	513
2010. .6340. 2. .	630 × 400	430 × 400	630 × 200	63	50	40	36	18	48/50 × 280	77	510	280	513
2010. .6340. 3. .	630 × 400	430 × 400	630 × 200	50	63	40	36	18	48/50 × 250	77	510	280	513
2010. .6340. 4. .	630 × 400	430 × 400	630 × 200	50	50	40	36	18	48/50 × 250	77	510	280	513
2010. .6350. 1. .	630 × 500	430 × 500	630 × 300	63	63	40	36	18	48/50 × 280	77	510	380	513
2010. .6350. 2. .	630 × 500	430 × 500	630 × 300	63	50	40	36	18	48/50 × 280	77	510	380	513
2010. .6350. 3. .	630 × 500	430 × 500	630 × 300	50	63	40	36	18	48/50 × 250	77	510	380	513
2010. .6350. 4. .	630 × 500	430 × 500	630 × 300	50	50	40	36	18	48/50 × 250	77	510	380	513
2010. .6363. 1. .	630 × 630	430 × 630	630 × 430	63	63	40	36	18	48/50 × 280	77	510	510	513
2010. .6363. 2. .	630 × 630	430 × 630	630 × 430	63	50	40	36	18	48/50 × 280	77	510	510	513
2010. .6363. 3. .	630 × 630	430 × 630	630 × 430	50	63	40	36	18	48/50 × 250	77	510	510	513
2010. .6363. 4. .	630 × 630	430 × 630	630 × 430	50	50	40	36	18	48/50 × 250	77	510	510	513
2010. .7140. 1. .	710 × 400	510 × 400	710 × 200	63	63	40	36	18	48/50 × 280	77	590	280	593
2010. .7140. 2. .	710 × 400	510 × 400	710 × 200	63	50	40	36	18	48/50 × 280	77	590	280	593
2010. .7140. 3. .	710 × 400	510 × 400	710 × 200	50	63	40	36	18	48/50 × 250	77	590	280	593
2010. .7140. 4. .	710 × 400	510 × 400	710 × 200	50	50	40	36	18	48/50 × 250	77	590	280	593
2010. .7150. 1. .	710 × 500	510 × 500	710 × 300	63	63	40	36	18	48/50 × 280	77	590	380	593
2010. .7150. 2. .	710 × 500	510 × 500	710 × 300	63	50	40	36	18	48/50 × 280	77	590	380	593
2010. .7150. 3. .	710 × 500	510 × 500	710 × 300	50	63	40	36	18	48/50 × 250	77	590	380	593
2010. .7150. 4. .	710 × 500	510 × 500	710 × 300	50	50	40	36	18	48/50 × 250	77	590	380	593
2010. .7163. 1. .	710 × 630	510 × 630	710 × 430	63	63	40	36	18	48/50 × 280	77	590	510	593
2010. .7163. 2. .	710 × 630	510 × 630	710 × 430	63	50	40	36	18	48/50 × 280	77	590	510	593
2010. .7163. 3. .	710 × 630	510 × 630	710 × 430	50	63	40	36	18	48/50 × 250	77	590	510	593
2010. .7163. 4. .	710 × 630	510 × 630	710 × 430	50	50	40	36	18	48/50 × 250	77	590	510	593
2010. .8040. 1. .	800 × 400	600 × 400	800 × 200	63	63	40	36	18	48/50 × 280	77	680	280	683
2010. .8040. 2. .	800 × 400	600 × 400	800 × 200	63	50	40	36	18	48/50 × 280	77	680	280	683
2010. .8040. 3. .	800 × 400	600 × 400	800 × 200	50	63	40	36	18	48/50 × 250	77	680	280	683
2010. .8040. 4. .	800 × 400	600 × 400	800 × 200	50	50	40	36	18	48/50 × 250	77	680	280	683
2010. .8050. 1. .	800 × 500	600 × 500	800 × 300	63	63	40	36	18	48/50 × 280	77	680	380	683
2010. .8050. 2. .	800 × 500	600 × 500	800 × 300	63	50	40	36	18	48/50 × 280	77	680	380	683
2010. .8050. 3. .	800 × 500	600 × 500	800 × 300	50	63	40	36	18	48/50 × 250	77	680	380	683
2010. .8050. 4. .	800 × 500	600 × 500	800 × 300	50	50	40	36	18	48/50 × 250	77	680	380	683
2010. .8063. 1. .	800 × 630	600 × 630	800 × 430	63	63	40	36	18	48/50 × 280	77	680	510	683
2010. .8063. 2. .	800 × 630	600 × 630	800 × 430	63	50	40	36	18	48/50 × 280	77	680	510	683
2010. .8063. 3. .	800 × 630	600 × 630	800 × 430	50	63	40	36	18	48/50 × 250	77	680	510	683
2010. .8063. 4. .	800 × 630	600 × 630	800 × 430	50	50	40	36	18	48/50 × 250	77	680	510	683

FIBRO

Die set to customer‘s specifications.
Please copy this page, complete questions, and mail to FIBRO

201.45. Die set to customer‘s specifications Steel

201.65. Die set to customer‘s specifications Aluminium

without stripper

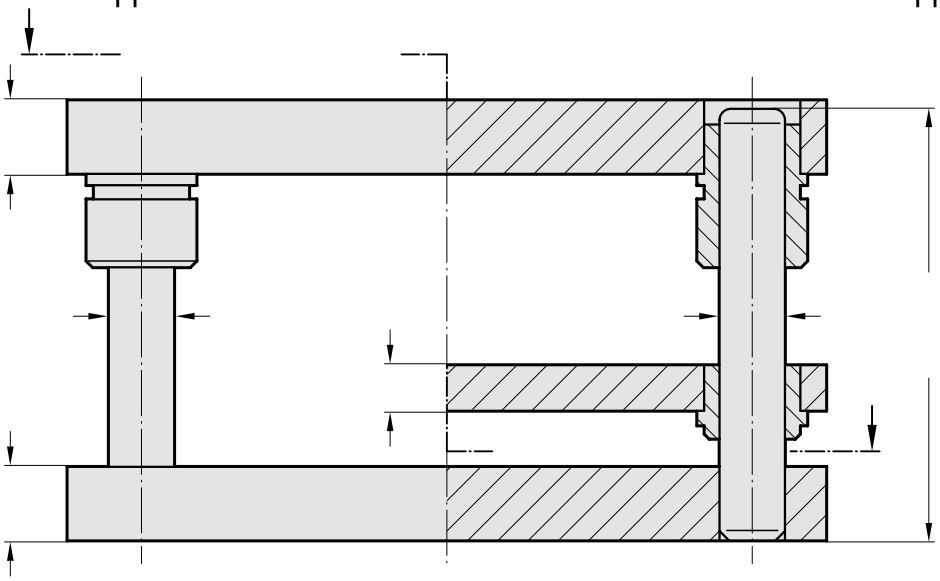

with stripper

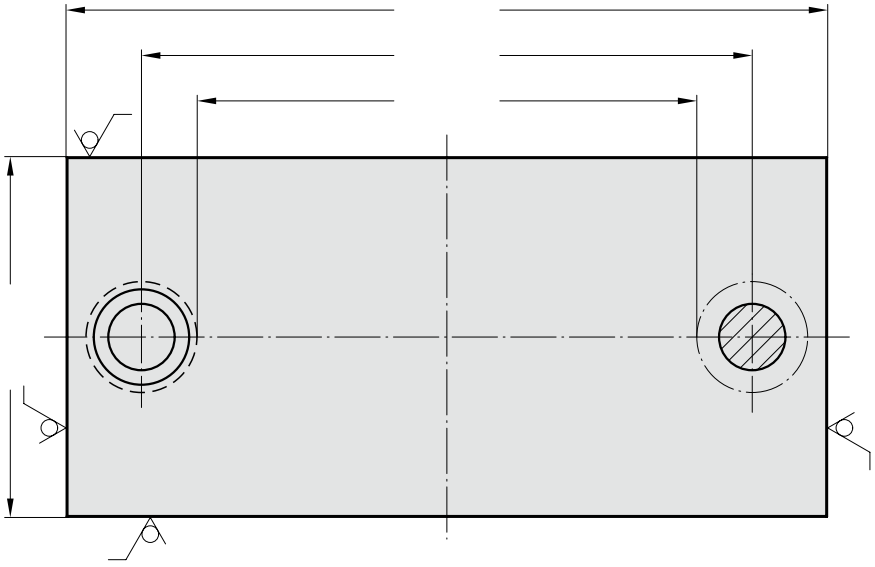

Enquiry ☐ Order ☐

Material: Aluminium ☐ 201.65. Steel ☐ 201.45.

Company Telephone

Name (ref. for replies) Signature

Guide Pillars

202.19.
Guide Pillar
DIN 9825/ISO 9182-2

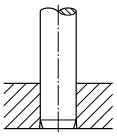

202.21.
Guide Pillar
endwise bolt-on type

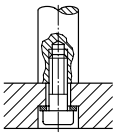

2021.46.
Demountable Pillars
with collar, push fit,
screw clamp retention

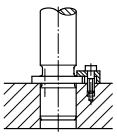

2021.46.
Demountable Pillars
with collar, push fit,
screw clamp retention

2021.43.
Disc and screw

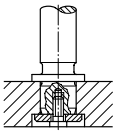

2021.50.
Demountable Pillar,
conical, central screw
retention

2021.39. Liner Bush

2021.53.
Disc and Screw

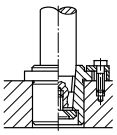

202.60.
Stripper-Mounted
Pillars with Collar,
demountable, push fit,
ring nut retention

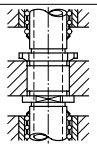

Guide Bushes

2031.34. Mounting
Flanges, rectangular;
sintered guide bush,
carbonitrided

2031.42. ditto –
Ball bearing Guide Bush
206.71. Ball Cage

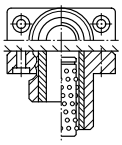

2031.38. Shallow Mounting Flanges,
rectangular;
sintered guide bush,
carbonitrided

2031.44. ditto – Ball
bearing Guide Bush

206.71. Ball Cage

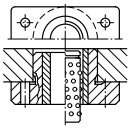

2051.32. Sintered Ferrite Guide Bush,
carbonitrided, bonded

2061.44. Guide Bush
for Ball Bearing Guide

206.71. Ball Cage

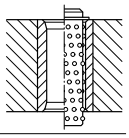

2081.31./.32./.33./.34./.35.
Headed Guide Bushes,
Sintered Ferrite,
carbonitrided

2081.44./.45./.46./
.47./.49. Guide Bushes
for Ball Bearing Guide

206.71. Ball Cage

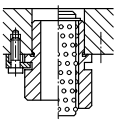

2091.31./.32./.34. Flanged Guide
Bushes, Sintered Ferrite,
carbonitrided

2091.44./.45./.46.
Guide Bushes for Ball
Bearing Guide, push fit

206.71. Ball Cage

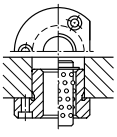

subject to alterations

Die set to customer‘s specifications.
Please copy this page, complete questions, and mail to FIBRO

Guide Pillars

202.19.
Guide Pillar
DIN 9825/ISO 9182-2

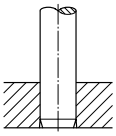

202.21.
Guide Pillar
endwise bolt-on type

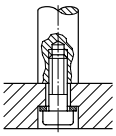

2021.46.
Demountable Pillars
with collar, push fit,
screw clamp retention

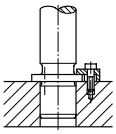

2021.46.
Demountable Pillars
with collar, push fit,
screw clamp retention

2021.43.
Disc and screw

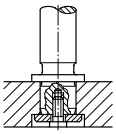

2021.50.
Demountable Pillar,
conical, central screw
retention

2021.39. Liner Bush

2021.53.
Disc and Screw

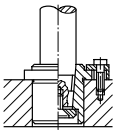

202.60.
Stripper-Mounted
Pillars with Collar,
demountable, push fit,
ring nut retention

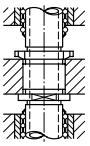

Guide Bushes

2031.34. Mounting
Flanges, rectangular;
sintered guide bush,
carbonitrided
2031.42. ditto –
Ball bearing Guide Bush
206.71. Ball Cage

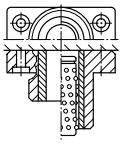

2031.38. Shallow Mounting
Flanges, rectangular;
sintered guide
bush, carbonitrided

2031.44. ditto – Ball
bearing Guide Bush

206.71. Ball Cage

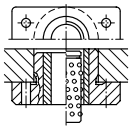

2051.32. Sintered Ferrite Guide
Bush, carbonitrided, bonded

2061.44. Guide Bush
for Ball Bearing Guide

206.71. Ball Cage

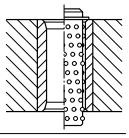

2081.31./.32./.33./.34./.35.
Headed Guide Bushes,
Sintered Ferrite,
carbonitrided

2081.44./.45./.46./
.47./.49. Guide Bushes
for Ball Bearing Guide

206.71. Ball Cage

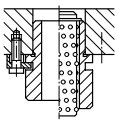

2091.31./.32./.34. Flanged Guide
Bushes, Sintered Ferrite,
carbonitrided

2091.44./.45./.46.
Guide Bushes for Ball
Bearing Guide, push fit

206.71. Ball Cage

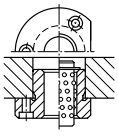

201.46. Die set to customer‘s specifications Steel
201.66. Die set to customer‘s specifications Aluminium

without stripper

with stripper

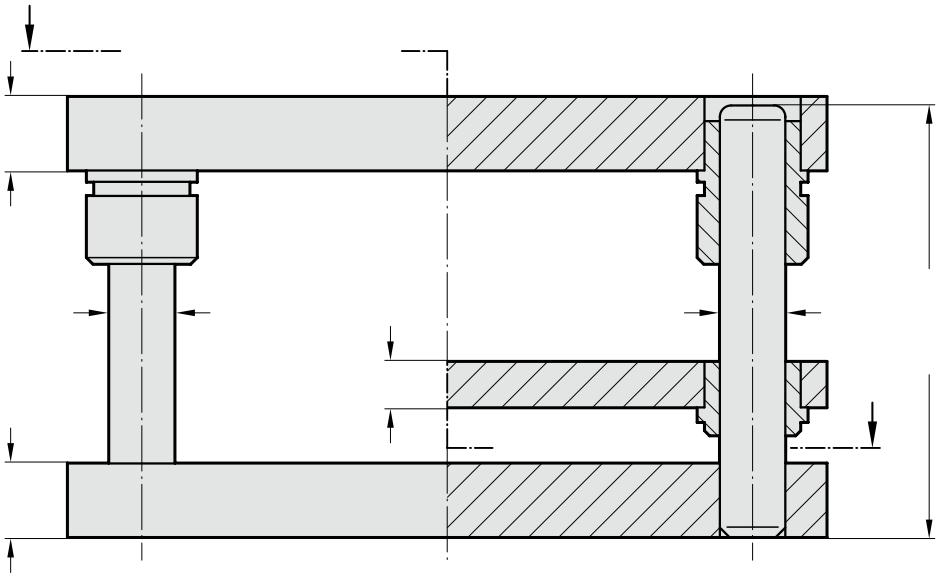

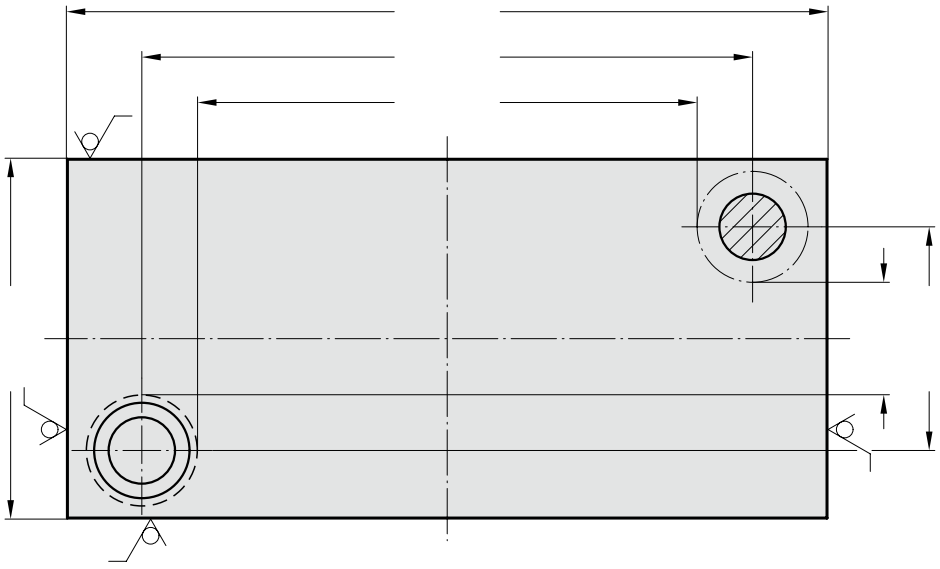

Enquiry ☐ Order ☐

Material: Aluminium ☐ 201.66. Steel ☐ 201.46.

Company Telephone

Name (ref. for replies) Signature

Die set to customer's specifications.
Please copy this page, complete questions, and mail to FIBRO

201.47. Die set to customer's specifications Steel

201.67. Die set to customer's specifications Aluminium

without stripper

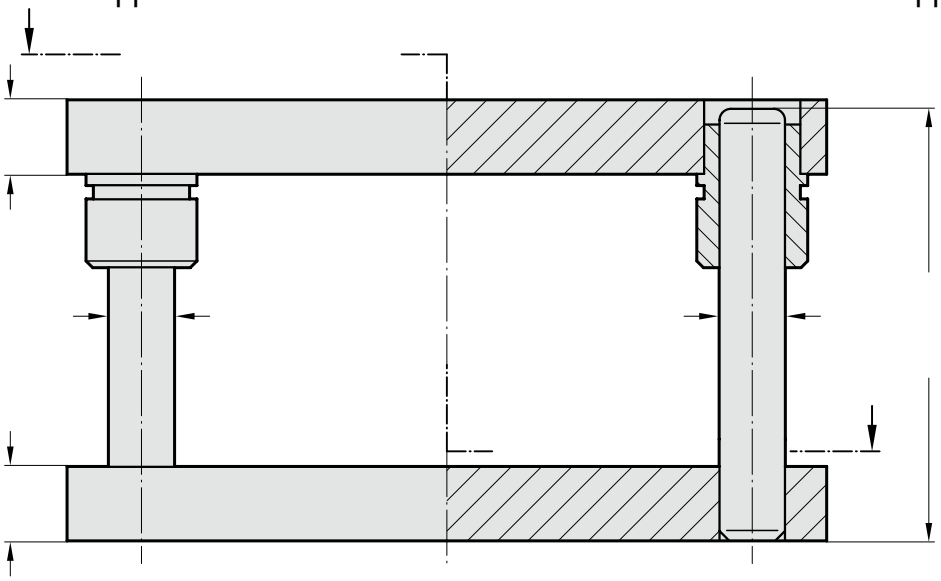

with stripper

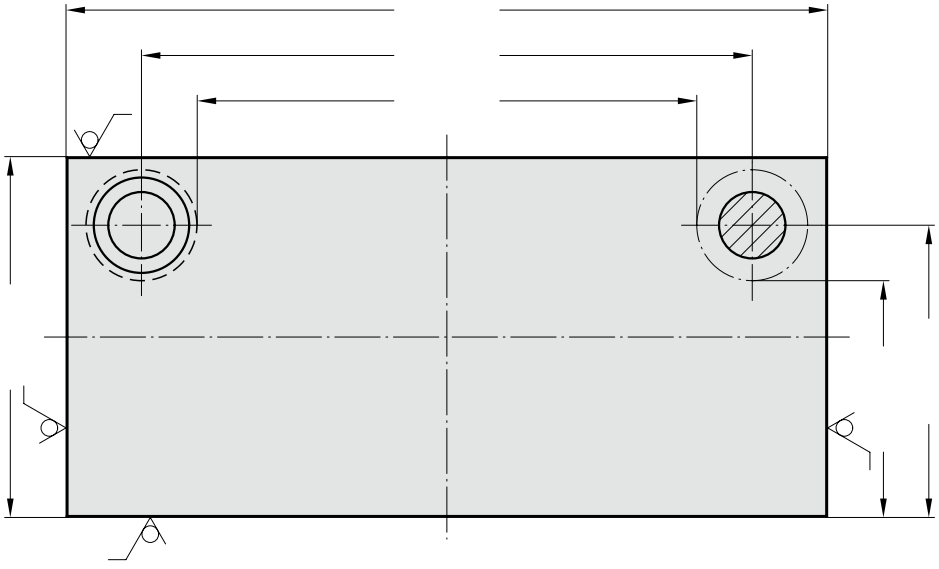

Guide Pillars

202.19.
Guide Pillar
DIN 9825/ISO 9182-2

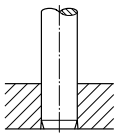

202.21.
Guide Pillar
endwise bolt-on type

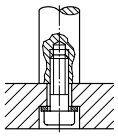

2021.46.
Demountable Pillars
with collar, push fit,
screw clamp retention

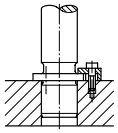

2021.46.
Demountable Pillars
with collar, push fit,
screw clamp retention

2021.43.
Disc and screw

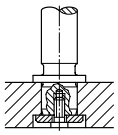

2021.50.
Demountable Pillar,
conical, central screw
retention

2021.39. Liner Bush

2021.53.
Disc and Screw

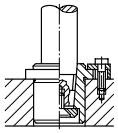

Guide Bushes

2031.34. Mounting
Flanges, rectangular;
sintered guide bush,
carbonitrided

2031.42. ditto –
Ball bearing Guide Bush
206.71. Ball Cage

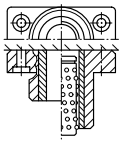

2031.38. Shallow Mounting
Flanges, rectangular;
sintered guide
bush, carbonitrided

2031.44. ditto – Ball
bearing Guide Bush

206.71. Ball Cage

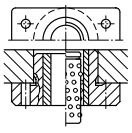

2051.32. Sintered Ferrite Guide
Bush, carbonitrided, bonded

2061.44. Guide Bush
for Ball Bearing Guide

206.71. Ball Cage

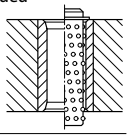

2081.31./.32./.33./.34./.35.
Headed Guide Bushes,
Sintered Ferrite,
carbonitrided

2081.44./.45./.46./
.47./.49. Guide Bushes
for Ball Bearing Guide

206.71. Ball Cage

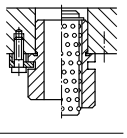

2091.31./.32./.34. Flanged Guide
Bushes, Sintered Ferrite,
carbonitrided

2091.44./.45./.46.
Guide Bushes for Ball
Bearing Guide, push fit

206.71. Ball Cage

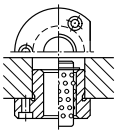

Enquiry ☐ Order ☐

Material: Aluminium ☐ 201.67. Steel ☐ 201.47.

Company Telephone

Name (ref. for replies) Signature

subject to alterations

Die set to costumer's specifications.
Please copy this page, complete questions, and mail to FIBRO

Guide Pillars

202.19.
Guide Pillar
DIN 9825/ISO 9182-2

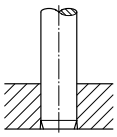

202.21.
Guide Pillar
endwise bolt-on type

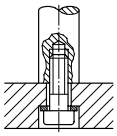

2021.46.
Demountable Pillars
with collar, push fit,
screw clamp retention

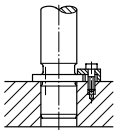

2021.46.
Demountable Pillars
with collar, push fit,
screw clamp retention

2021.43.
Disc and screw

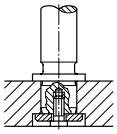

2021.50.
Demountable Pillar,
conical, central screw
retention

2021.39. Liner Bush

2021.53.
Disc and Screw

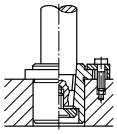

202.60.
Stripper-Mounted
Pillars with Collar,
demountable, push fit,
ring nut retention

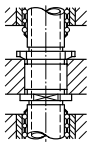

Guide Bushes

2031.34. Mounting
Flanges, rectangular;
sintered guide bush,
carbonitrided

2031.42. ditto –
Ball bearing Guide Bush

206.71. Ball Cage

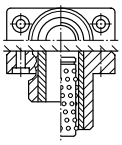

2031.38. Shallow Mounting
Flanges, rectangular;
sintered guide
bush, carbonitrided

2031.44. ditto – Ball
bearing Guide Bush

206.71. Ball Cage

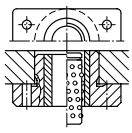

2051.32. Sintered Ferrite Guide
Bush, carbonitrided, bonded

2061.44. Guide Bush
for Ball Bearing Guide

206.71. Ball Cage

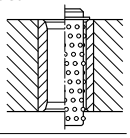

2081.31./.32./.33./.34./.35.
Headed Guide Bushes,
Sintered Ferrite,
carbonitrided

2081.44./.45./.46./
.47./.49. Guide Bushes
for Ball Bearing Guide

206.71. Ball Cage

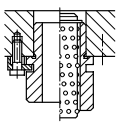

2091.31./.32./.34. Flanged Guide
Bushes, Sintered Ferrite,
carbonitrided

2091.44./.45./.46.
Guide Bushes for Ball
Bearing Guide, push fit

206.71. Ball Cage

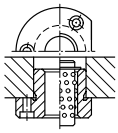

201.49. Die set to costumer's specifications Steel

201.69. Die set to costumer's specifications Aluminium

without stripper

with stripper

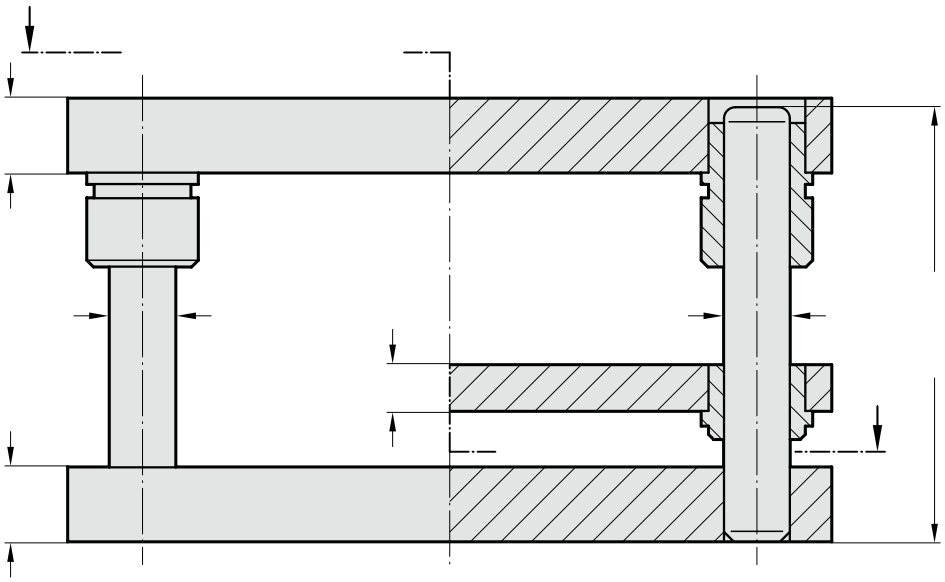

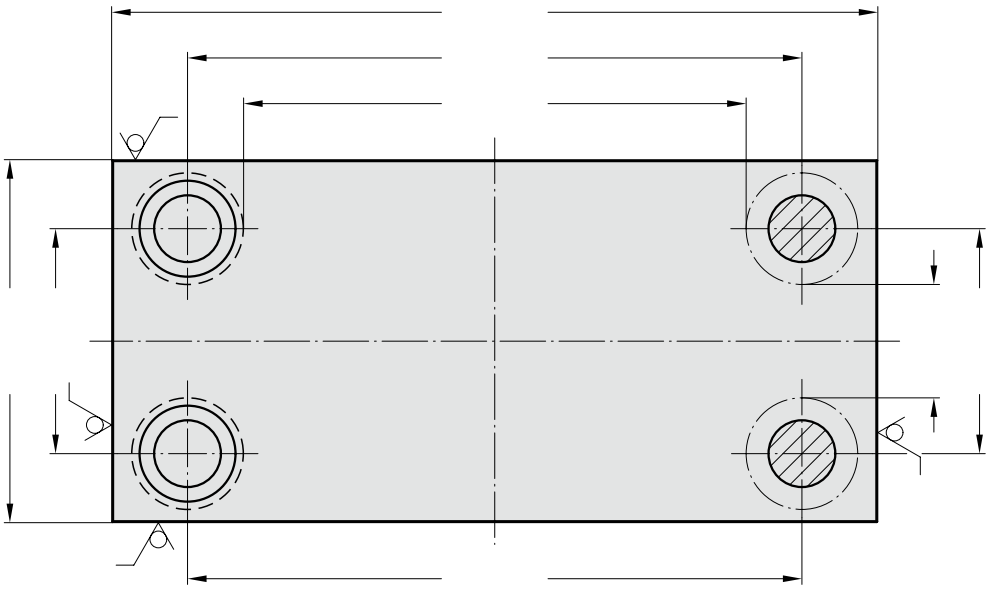

Enquiry ☐ Order ☐

Material: Aluminium ☐ 201.69. Steel ☐ 201.49.

Company Telephone

Name (ref. for replies) Signature

Die set without / with stripper *ECO-LINE*

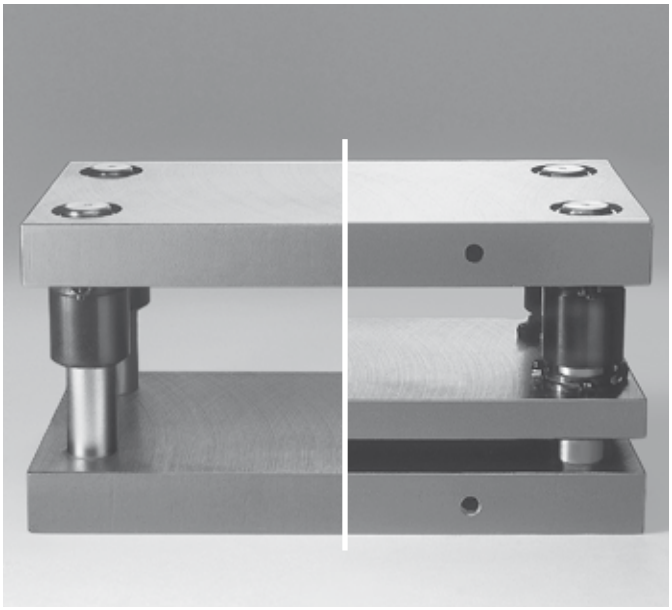

without Stripper

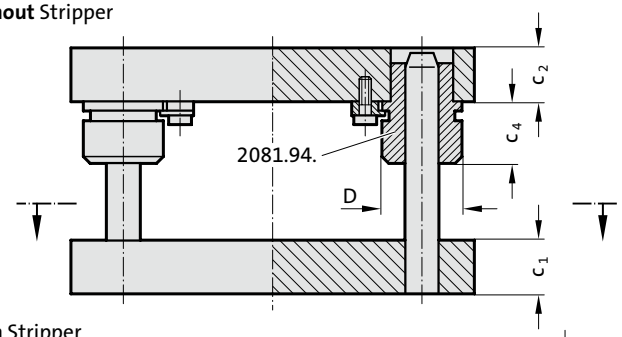

with Stripper

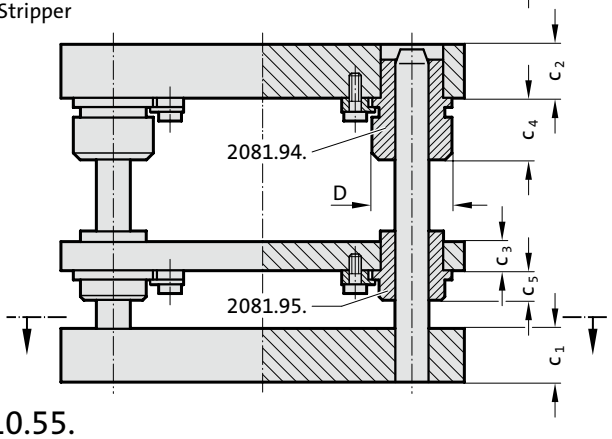

Executions:

With press-fitted guide pillars 202.29.

Headed Guide Bushes bronze plated **without** stripper

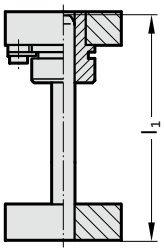

2010.5□.□□□□.□.894

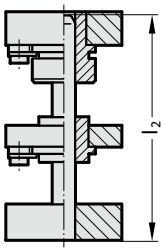

Headed Guide Bushes bronze plated **with** stripper

2010.5□.□□□□.□.895

With demountable guide pillars 2021.29.***

Headed Guide Bushes bronze plated **without** stripper

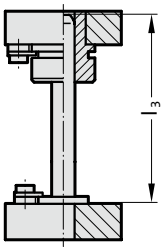

2010.5□.□□□□.□.894.29

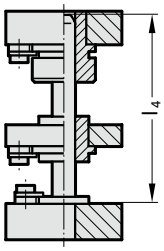

Headed Guide Bushes bronze plated **with** stripper

2010.5□.□□□□.□.895.29

Description:

FIBRO 2010.5x all-steel die sets are supplied with bronze plated guide bushes. These are supplied in push-fit bolster bores and retained by screw clamps.

Execution:

External contours milled
Thickness surfaces ground

Note:

*** to be fixed only with screw clamps

2010.55.

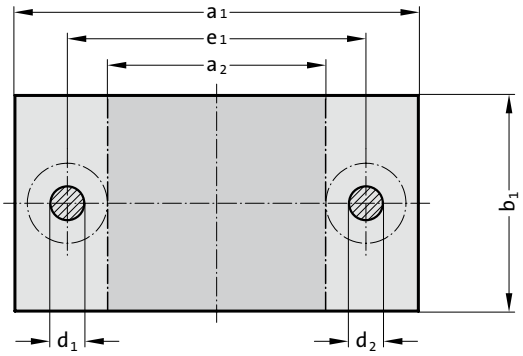

2010.57.

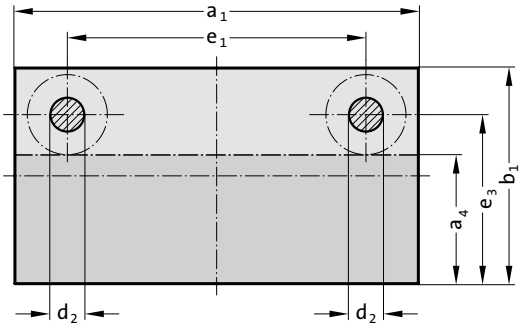

2010.59.

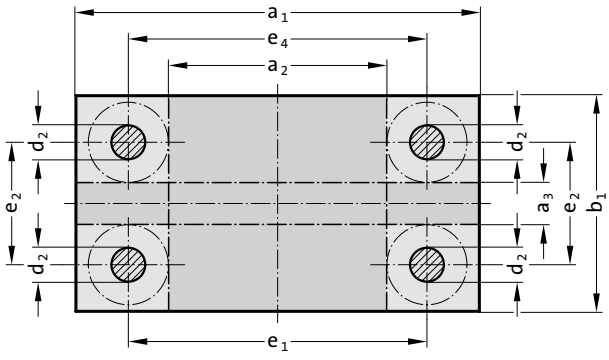

subject to alterations

Die set without / with stripper *ECO-LINE*

2010.5□. Die set without / with stripper ECO-LINE

Type 2010.55.

2010.57.

2010.59.

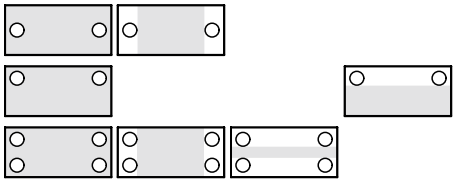

Order No			Exe-	Exe-	ext. dim.	Work area(s)**			c_1	c_2	c_3										
Type	Size	P*	cution	cution***	$a_1 \times b_1$	$a_2 \times b_1$	$a_1 \times a_3$	$a_1 \times a_4$	± 2	± 2	± 2	c_4	c_5	d_1/d_2	l_1/l_2	l_3/l_4	D	e_1	e_2	e_3	e_4
2010.55.	2512.	1.			250 x 125	120 x 125	–	–	40	40	32	36	12	24/25	180/200	140/180	46	170	–	–	–
2010.55.	2512.	4.			250 x 125	120 x 125	–	–	32	32	32	36	12	24/25	180/200	140/180	46	170	–	–	–
2010.57.	2520.	1.	894		250 x 200	–	–	250 x 135	40	40	–	36	–	–/25	180/ –	140/ –	46	170	–	160	–
2010.57.	2520.	4.	894		250 x 200	–	–	250 x 135	32	32	–	36	–	–/25	180/ –	140/ –	46	170	–	160	–
2010.59.	2520.	4.			250 x 200	120 x 200	250 x 50	–	32	32	32	36	12	–/25	180/200	140/180	46	170	120	–	173
2010.59.	2525.	4.			250 x 250	120 x 250	250 x 100	–	32	32	32	36	12	–/25	180/200	140/180	46	170	170	–	173
2010.55.	3116.	1.			315 x 160	165 x 160	–	–	50	50	32	45	12	30/32	200/224	160/200	53	225	–	–	–
2010.55.	3116.	4.			315 x 160	165 x 160	–	–	40	40	32	45	12	30/32	200/224	160/200	53	225	–	–	–
2010.55.	3120.	4.			315 x 200	165 x 200	–	–	40	40	32	45	12	30/32	200/224	160/200	53	225	–	–	–
2010.57.	3120.	4.	894		315 x 200	–	–	315 x 125	40	40	–	45	–	–/32	200/ –	160/ –	53	225	–	155	–
2010.59.	3120.	4.			315 x 200	165 x 200	315 x 30	–	40	40	32	45	12	–/32	200/224	160/200	53	225	110	–	228
2010.57.	3125.	1.	894		315 x 250	–	–	315 x 175	50	50	–	45	–	–/32	200/ –	160/ –	53	225	–	205	–
2010.59.	3125.	1.			315 x 250	165 x 250	315 x 80	–	50	50	32	45	12	–/32	200/224	160/200	53	225	160	–	228
2010.59.	3125.	4.			315 x 250	165 x 250	315 x 80	–	40	40	32	45	12	–/32	200/224	160/200	53	225	160	–	228
2010.59.	3131.	1.			315 x 315	165 x 315	315 x 145	–	50	50	32	45	12	–/32	200/224	160/200	53	225	225	–	228
2010.55.	4020.	4.			400 x 200	250 x 200	–	–	40	40	32	45	12	30/32	200/224	160/200	53	310	–	–	–
2010.59.	4020.	4.			400 x 200	250 x 200	400 x 30	–	40	40	32	45	12	–/32	200/224	160/200	53	310	110	–	313
2010.55.	4025.	1.			400 x 250	250 x 250	–	–	50	50	32	45	12	30/32	200/224	160/200	53	310	–	–	–
2010.57.	4025.	1.	894		400 x 250	–	–	400 x 175	50	50	–	45	–	–/32	200/ –	160/ –	53	310	–	205	–
2010.59.	4025.	1.			400 x 250	250 x 250	400 x 80	–	50	50	32	45	12	–/32	200/224	160/200	53	310	160	–	313
2010.59.	4025.	4.			400 x 250	250 x 250	400 x 80	–	40	40	32	45	12	–/32	200/224	160/200	53	310	160	–	313
2010.57.	4031.	4.	894		400 x 315	–	–	400 x 240	40	40	–	45	–	–/32	200/ –	160/ –	53	310	–	270	–
2010.59.	4031.	1.			400 x 315	250 x 315	400 x 145	–	50	50	32	45	12	–/32	200/224	160/200	53	310	225	–	313
2010.59.	4040.	1.			400 x 400	250 x 400	400 x 230	–	50	50	32	45	12	–/32	200/224	160/200	53	310	310	–	313
2010.59.	4040.	4.			400 x 400	250 x 400	400 x 230	–	40	40	32	45	12	–/32	200/224	160/200	53	310	310	–	313
2010.55.	5025.	1.			500 x 250	325 x 250	–	–	50	50	32	45	15	38/40	200/224	160/200	63	400	–	–	–
2010.59.	5025.	1.			500 x 250	325 x 250	500 x 75	–	50	50	32	45	15	–/40	200/224	160/200	63	400	150	–	403
2010.59.	5025.	4.			500 x 250	325 x 250	500 x 75	–	40	40	32	45	15	–/40	200/224	160/200	63	400	150	–	403
2010.55.	5031.	1.			500 x 315	325 x 315	–	–	50	50	32	45	15	38/40	200/224	160/200	63	400	–	–	–
2010.59.	5031.	1.			500 x 315	325 x 315	500 x 140	–	50	50	32	45	15	–/40	200/224	160/200	63	400	215	–	403
2010.59.	5040.	1.			500 x 400	325 x 400	500 x 225	–	50	50	32	45	15	–/40	200/224	160/200	63	400	300	–	403
2010.59.	5050.	1.			500 x 500	325 x 500	500 x 325	–	50	50	32	45	15	–/40	200/224	160/200	63	400	400	–	403

*Thickness combinations

**Work area dimensions are not affected
by the positions of the screw clamps that retain the bushes!

***With demountable guide pillars 2021.29.

Next day delivery!

Ordering code (example):

Type of Die Set (external dimensions		
$a_1 \times b_1 = 400 \times 250$; $c_1 = c_2 = 50$)	=	2010.55.4025.1.
Execution with stripper	=	895.
with demountable guide pillars 2021.29.	=	29
Order No	=	2010.55.4025.1.895.29

Ordering code (example):

Type of Die Set (external dimensions		
$a_1 \times b_1 = 400 \times 250$; $c_1 = c_2 = 50$)	=	2010.55.4025.1.
Execution with stripper	=	895
Order No	=	2010.55.4025.1.895

Steel plate ISO 6753-1

2900.

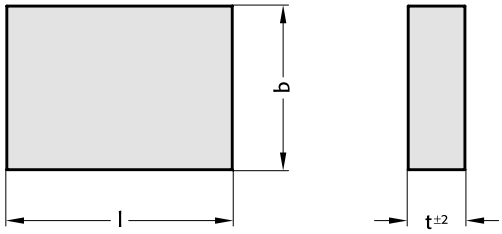

Execution:

External contours milled, thickness surfaces ground

Note:

l or b ≤ 630 = +0,2 / +0,4

l or b > 630 = +0,2 / +0,6

Plates from 500 × 500 mm on are manufactured with lifting thread.

2900. Steel plate ISO 6753-1

Order No	Size l x b x t	Order No	Size l x b x t	Order No	Size l x b x t
2900.1608.25	160 x 80 x 25	2900.3120.40	315 x 200 x 40	2900.6340.32	630 x 400 x 32
2900.1608.32	160 x 80 x 32	2900.3120.50	315 x 200 x 50	2900.6340.40	630 x 400 x 40
2900.1610.25	160 x 100 x 25	2900.3125.32	315 x 250 x 32	2900.6340.50	630 x 400 x 50
2900.1610.32	160 x 100 x 32	2900.3125.40	315 x 250 x 40	2900.6340.63	630 x 400 x 63
2900.1612.25	160 x 125 x 25	2900.3125.50	315 x 250 x 50	2900.6350.32	630 x 500 x 32
2900.1612.32	160 x 125 x 32	2900.3131.32	315 x 315 x 32	2900.6350.40	630 x 500 x 40
2900.1616.25	160 x 160 x 25	2900.3131.40	315 x 315 x 40	2900.6350.50	630 x 500 x 50
2900.1616.32	160 x 160 x 32	2900.3131.50	315 x 315 x 50	2900.6350.63	630 x 500 x 63
2900.2010.25	200 x 100 x 25	2900.4020.32	400 x 200 x 32	2900.6363.32	630 x 630 x 32
2900.2010.32	200 x 100 x 32	2900.4020.40	400 x 200 x 40	2900.6363.40	630 x 630 x 40
2900.2010.40	200 x 100 x 40	2900.4020.50	400 x 200 x 50	2900.6363.50	630 x 630 x 50
2900.2012.25	200 x 125 x 25	2900.4025.32	400 x 250 x 32	2900.6363.63	630 x 630 x 63
2900.2012.32	200 x 125 x 32	2900.4025.40	400 x 250 x 40	2900.7140.32	710 x 400 x 32
2900.2012.40	200 x 125 x 40	2900.4025.50	400 x 250 x 50	2900.7140.40	710 x 400 x 40
2900.2016.25	200 x 160 x 25	2900.4031.32	400 x 315 x 32	2900.7140.50	710 x 400 x 50
2900.2016.32	200 x 160 x 32	2900.4031.40	400 x 315 x 40	2900.7140.63	710 x 400 x 63
2900.2016.40	200 x 160 x 40	2900.4031.50	400 x 315 x 50	2900.7150.32	710 x 500 x 32
2900.2020.25	200 x 200 x 25	2900.4040.32	400 x 400 x 32	2900.7150.40	710 x 500 x 40
2900.2020.32	200 x 200 x 32	2900.4040.40	400 x 400 x 40	2900.7150.50	710 x 500 x 50
2900.2020.40	200 x 200 x 40	2900.4040.50	400 x 400 x 50	2900.7150.63	710 x 500 x 63
2900.2512.25	250 x 125 x 25	2900.5025.32	500 x 250 x 32	2900.7163.32	710 x 630 x 32
2900.2512.32	250 x 125 x 32	2900.5025.40	500 x 250 x 40	2900.7163.40	710 x 630 x 40
2900.2512.40	250 x 125 x 40	2900.5025.50	500 x 250 x 50	2900.7163.50	710 x 630 x 50
2900.2516.25	250 x 160 x 25	2900.5031.32	500 x 315 x 32	2900.7163.63	710 x 630 x 63
2900.2516.32	250 x 160 x 32	2900.5031.40	500 x 315 x 40	2900.8040.32	800 x 400 x 32
2900.2516.40	250 x 160 x 40	2900.5031.50	500 x 315 x 50	2900.8040.40	800 x 400 x 40
2900.2520.25	250 x 200 x 25	2900.5040.32	500 x 400 x 32	2900.8040.50	800 x 400 x 50
2900.2520.32	250 x 200 x 32	2900.5040.40	500 x 400 x 40	2900.8040.63	800 x 400 x 63
2900.2520.40	250 x 200 x 40	2900.5040.50	500 x 400 x 50	2900.8050.32	800 x 500 x 32
2900.2525.25	250 x 250 x 25	2900.5050.32	500 x 500 x 32	2900.8050.40	800 x 500 x 40
2900.2525.32	250 x 250 x 32	2900.5050.40	500 x 500 x 40	2900.8050.50	800 x 500 x 50
2900.2525.40	250 x 250 x 40	2900.5050.50	500 x 500 x 50	2900.8050.63	800 x 500 x 63
2900.3116.32	315 x 160 x 32	2900.6331.32	630 x 315 x 32	2900.8063.32	800 x 630 x 32
2900.3116.40	315 x 160 x 40	2900.6331.40	630 x 315 x 40	2900.8063.40	800 x 630 x 40
2900.3116.50	315 x 160 x 50	2900.6331.50	630 x 315 x 50	2900.8063.50	800 x 630 x 50
2900.3120.32	315 x 200 x 32	2900.6331.63	630 x 315 x 63	2900.8063.63	800 x 630 x 63

Aluminium plate ~ISO 6753-1

2910. .2

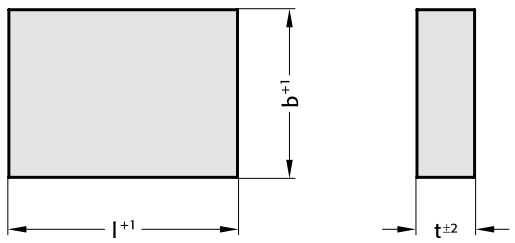

Execution:
2910.□□□□.□□.2
Two external contours milled. Thickness surfaces ground.

Note:
Plates from 500 × 500 mm on are manufactured with lifting thread.

2910. .0

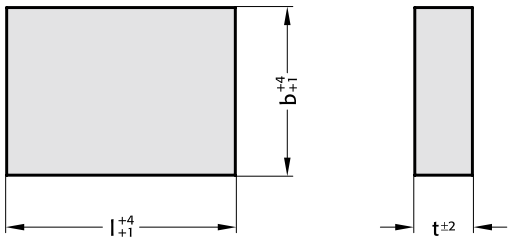

Execution:
2910.□□□□.□□.0
External contours sawed, Thickness surfaces ground.

Note:
Plates from 500 × 500 mm on are manufactured with lifting thread.

2910. Aluminium plate ~ISO 6753-1

Order No	Size l x b x t	Order No	Size l x b x t	Order No	Size l x b x t	Order No	Size l x b x t
2910.1608.25.□	160 x 80 x 25	2910.2520.32.□	250 x 200 x 32	2910.4040.40.□	400 x 400 x 40	2910.6363.40.□	630 x 630 x 40
2910.1608.32.□	160 x 80 x 32	2910.2520.40.□	250 x 200 x 40	2910.4040.50.□	400 x 400 x 50	2910.6363.50.□	630 x 630 x 50
2910.1610.25.□	160 x 100 x 25	2910.2525.25.□	250 x 250 x 25	2910.5025.32.□	500 x 250 x 32	2910.6363.63.□	630 x 630 x 63
2910.1610.32.□	160 x 100 x 32	2910.2525.32.□	250 x 250 x 32	2910.5025.40.□	500 x 250 x 40	2910.7140.32.□	710 x 400 x 32
2910.1612.25.□	160 x 125 x 25	2910.2525.40.□	250 x 250 x 40	2910.5025.50.□	500 x 250 x 50	2910.7140.40.□	710 x 400 x 40
2910.1612.32.□	160 x 125 x 32	2910.3116.32.□	315 x 160 x 32	2910.5031.32.□	500 x 315 x 32	2910.7140.50.□	710 x 400 x 50
2910.1616.25.□	160 x 160 x 25	2910.3116.40.□	315 x 160 x 40	2910.5031.40.□	500 x 315 x 40	2910.7140.63.□	710 x 400 x 63
2910.1616.32.□	160 x 160 x 32	2910.3116.50.□	315 x 160 x 50	2910.5031.50.□	500 x 315 x 50	2910.7150.32.□	710 x 500 x 32
2910.2010.25.□	200 x 100 x 25	2910.3120.32.□	315 x 200 x 32	2910.5040.32.□	500 x 400 x 32	2910.7150.40.□	710 x 500 x 40
2910.2010.32.□	200 x 100 x 32	2910.3120.40.□	315 x 200 x 40	2910.5040.40.□	500 x 400 x 40	2910.7150.50.□	710 x 500 x 50
2910.2010.40.□	200 x 100 x 40	2910.3120.50.□	315 x 200 x 50	2910.5040.50.□	500 x 400 x 50	2910.7150.63.□	710 x 500 x 63
2910.2012.25.□	200 x 125 x 25	2910.3125.32.□	315 x 250 x 32	2910.5050.32.□	500 x 500 x 32	2910.7163.32.□	710 x 630 x 32
2910.2012.32.□	200 x 125 x 32	2910.3125.40.□	315 x 250 x 40	2910.5050.40.□	500 x 500 x 40	2910.7163.40.□	710 x 630 x 40
2910.2012.40.□	200 x 125 x 40	2910.3125.50.□	315 x 250 x 50	2910.5050.50.□	500 x 500 x 50	2910.7163.50.□	710 x 630 x 50
2910.2016.25.□	200 x 160 x 25	2910.3131.32.□	315 x 315 x 32	2910.6331.32.□	630 x 315 x 32	2910.7163.63.□	710 x 630 x 63
2910.2016.32.□	200 x 160 x 32	2910.3131.40.□	315 x 315 x 40	2910.6331.40.□	630 x 315 x 40	2910.8040.32.□	800 x 400 x 32
2910.2016.40.□	200 x 160 x 40	2910.3131.50.□	315 x 315 x 50	2910.6331.50.□	630 x 315 x 50	2910.8040.40.□	800 x 400 x 40
2910.2020.25.□	200 x 200 x 25	2910.4020.32.□	400 x 200 x 32	2910.6331.63.□	630 x 315 x 63	2910.8040.50.□	800 x 400 x 50
2910.2020.32.□	200 x 200 x 32	2910.4020.40.□	400 x 200 x 40	2910.6340.32.□	630 x 400 x 32	2910.8040.63.□	800 x 400 x 63
2910.2020.40.□	200 x 200 x 40	2910.4020.50.□	400 x 200 x 50	2910.6340.40.□	630 x 400 x 40	2910.8050.32.□	800 x 500 x 32
2910.2512.25.□	250 x 125 x 25	2910.4025.32.□	400 x 250 x 32	2910.6340.50.□	630 x 400 x 50	2910.8050.40.□	800 x 500 x 40
2910.2512.32.□	250 x 125 x 32	2910.4025.40.□	400 x 250 x 40	2910.6340.63.□	630 x 400 x 63	2910.8050.50.□	800 x 500 x 50
2910.2512.40.□	250 x 125 x 40	2910.4025.50.□	400 x 250 x 50	2910.6350.32.□	630 x 500 x 32	2910.8050.63.□	800 x 500 x 63
2910.2516.25.□	250 x 160 x 25	2910.4031.32.□	400 x 315 x 32	2910.6350.40.□	630 x 500 x 40	2910.8063.32.□	800 x 630 x 32
2910.2516.32.□	250 x 160 x 32	2910.4031.40.□	400 x 315 x 40	2910.6350.50.□	630 x 500 x 50	2910.8063.40.□	800 x 630 x 40
2910.2516.40.□	250 x 160 x 40	2910.4031.50.□	400 x 315 x 50	2910.6350.63.□	630 x 500 x 63	2910.8063.50.□	800 x 630 x 50
2910.2520.25.□	250 x 200 x 25	2910.4040.32.□	400 x 400 x 32	2910.6363.32.□	630 x 630 x 32	2910.8063.63.□	800 x 630 x 63

Ordering Code (example):

Aluminium plate ~ISO 6753-1		=2910.	
Length L	400 mm	=	40
Width B	400 mm	=	40.
Thickness T	40 mm	=	40.
Execution FORM	sawed	=	0
Order No		=2910.4040.40.0	

Die Set Press Unit with/without guided bolster

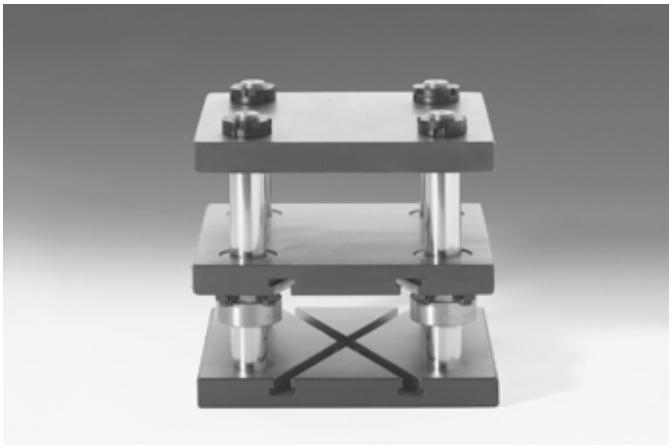

2011.45.
2011.49.

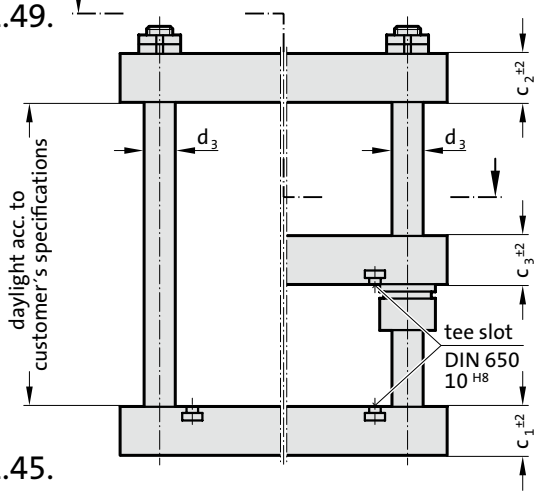

2011.49.

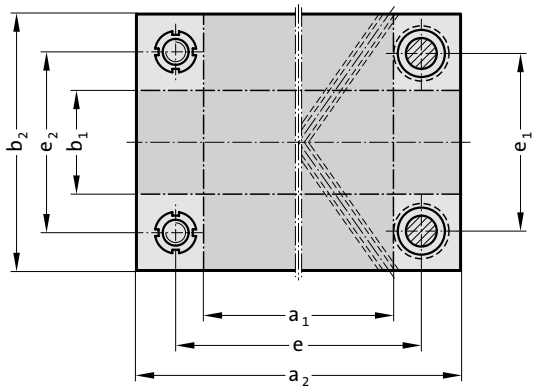

2011.45.

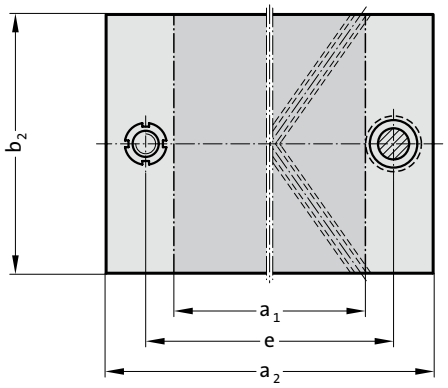

Order number system:

2011.4□.4031.□□.□□.1

Coupling spigots and -holders between cylinder and tool: see next page but one.

T grooves:	.0 = without .1 = in lower part and intermediate plate
Installation height h	
Version:	000. = without guide bolster 001. = without guide bolster – tension rod not hardened 831. = guide bolster with plain bearing 862. = guide bolster with ball bearing guide
External dimensions ($a_2 \times b_2$)	40: a_2 = 400 mm; 31: b_2 = 315 mm
Number of pillars:	5. = two guide pillars 9. = four guide pillars
Steel plates	
Die Set Press Unit – ISO sizes	

2011. Die Set Press Units with/without guided bolster

Order No	work area $a_1 \times b_2$	work area $a_2 \times b_1$	max. press thrust kN	a_2	b_2	c_1	c_2	c_3	d_3	e	e_1	e_2
2011. .2020.	86 × 200	200 × 65	20	200	200	32	32	32	25	132	132	129
.2520.	136 × 200	250 × 64	20	250	200	32	32	32	25	182	132	129
.2525.	120 × 250	250 × 100	40	250	250	40	40	40	32	174	174	171
.3125.	185 × 250	315 × 100	40	315	250	40	40	40	32	239	174	171
.3131.	185 × 315	315 × 165	40	315	315	40	40	40	32	239	239	236
.4031.	270 × 315	400 × 165	80	400	315	50	50	50	32	324	239	236
.4040.	270 × 400	400 × 250	80	400	400	50	50	50	32	324	324	321

subject to alterations

Die Set Press Unit with guided top bolster, manual actuation

201.149.

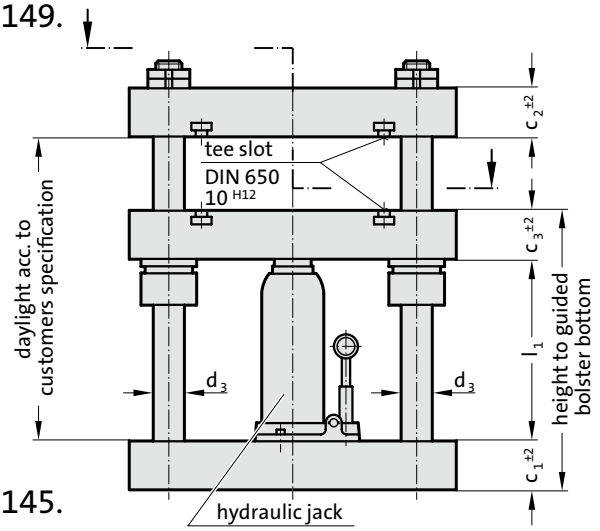

201.145.

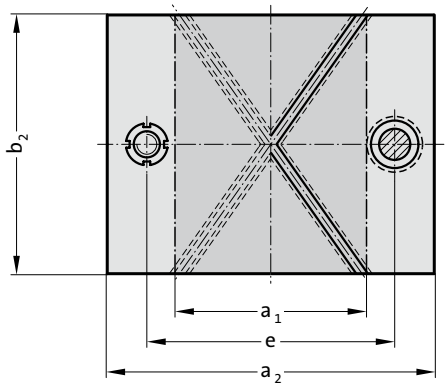

201.149.

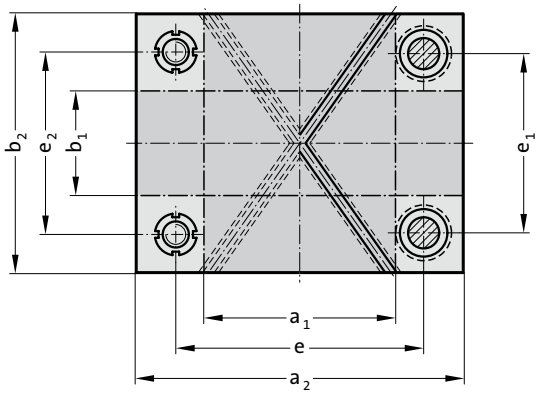

Order number system:

201.14 □ .4031. ⬚⬚ . ⬚⬚ .1

- T grooves: .0 = without; .1 = in top bolster and intermediate plate
- Installation height h
- Version: 831. = guide bolster with plain bearing; 862. = guide bolster with ball bearing guide
- External dimensions ($a_2 \times b_2$): 40: a_2 = 400 mm; 31: b_2 = 315 mm
- Number of pillars: 5. = two guide pillars; 9. = four guide pillars
- Steel plates
- Die Set Press Unit – ISO sizes

Execution: Headed guide bushes, hydraulic jack.

201. Die Set Press Unit with guided top bolster manual actuation

Order No	work area $a_1 \times b_2$	work area $a_2 \times b_1$	max. press thrust kN	a_2	b_2	c_1	c_2	c_3	d_3	e	e_1	e_2	l_1	stroke max.
201. .2020.	86 × 200	200 × 65	20	200	200	32	32	32	25	132	132	129	180	130
.2520.	136 × 200	250 × 64	20	250	200	32	32	32	25	182	132	129	180	130
.2525.	120 × 250	250 × 100	40	250	250	40	40	40	32	174	174	171	180	130
.3125.	185 × 250	315 × 100	40	315	250	40	40	40	32	239	174	171	200	130
.3131.	185 × 315	315 × 165	40	315	315	40	40	40	32	239	239	236	200	130
.4031.	270 × 315	400 × 165	80	400	315	50	50	50	32	324	239	236	245	160
.4040.	270 × 400	400 × 250	80	400	400	50	50	50	32	324	324	321	245	160

Die Set Press Unit-Accessories
Coupling Spigot Holder
Coupling Spigot



212.16.1.

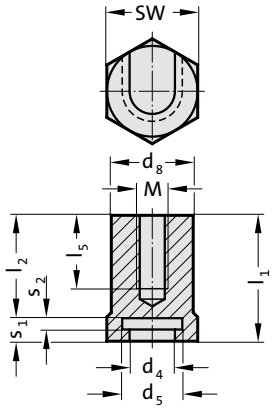

212.16.1. Coupling Spigot Holder

Order No	d_4	d_5	d_8	SW	l_1	l_2	l_5*	M*	s_1	s_2
212.16.1.026	26	33	45	50	70	57,4			12,6	7
212.16.1.033	33	49	60	65	86	67,4			18,6	10

* upon customer's specification



212.11.

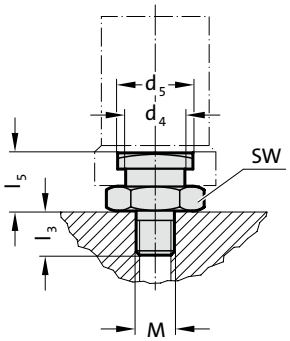

212.11. Coupling Spigot

Order No	M	d_4	d_5	l_3	l_5	SW
212.11.016	M16 × 1.5	25	32	18	23	36
212.11.030	M30 × 2	32	48	30	43	60



212.15.

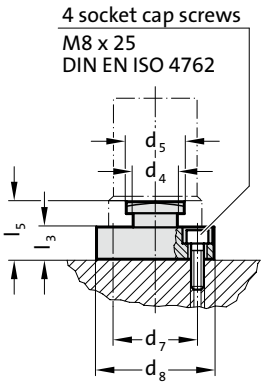

212.15. Coupling Spigot

Order No	d_4	d_5	d_8	d_7	l_3	l_5
212.15.063	25	32	63	46	18	31
212.15.080	32	48	80	63	18	37

subject to alterations

Special Die Set (All-Steel) to Customers‘ Specification

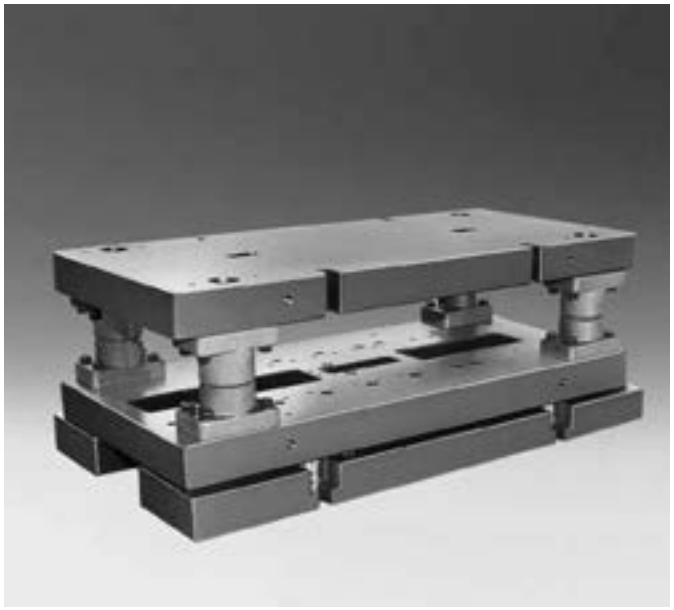

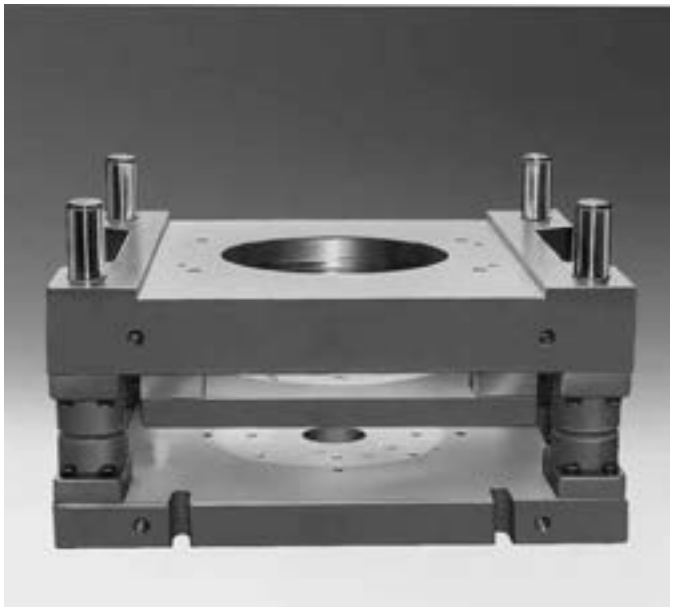

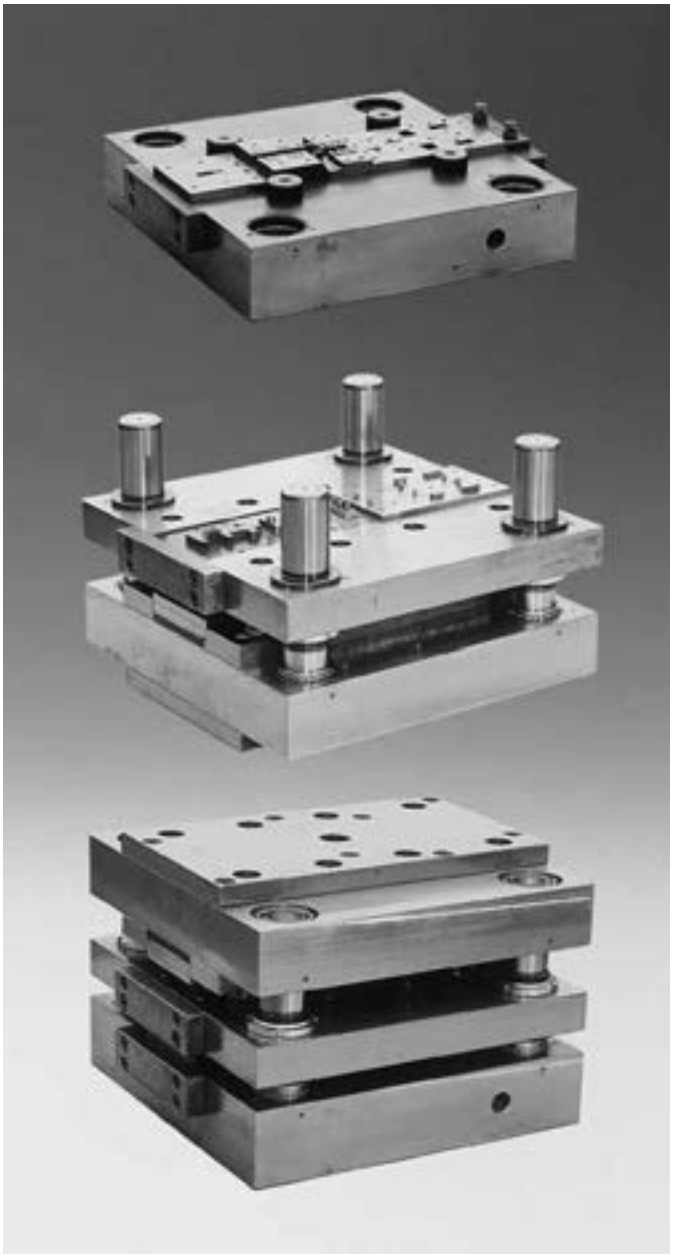

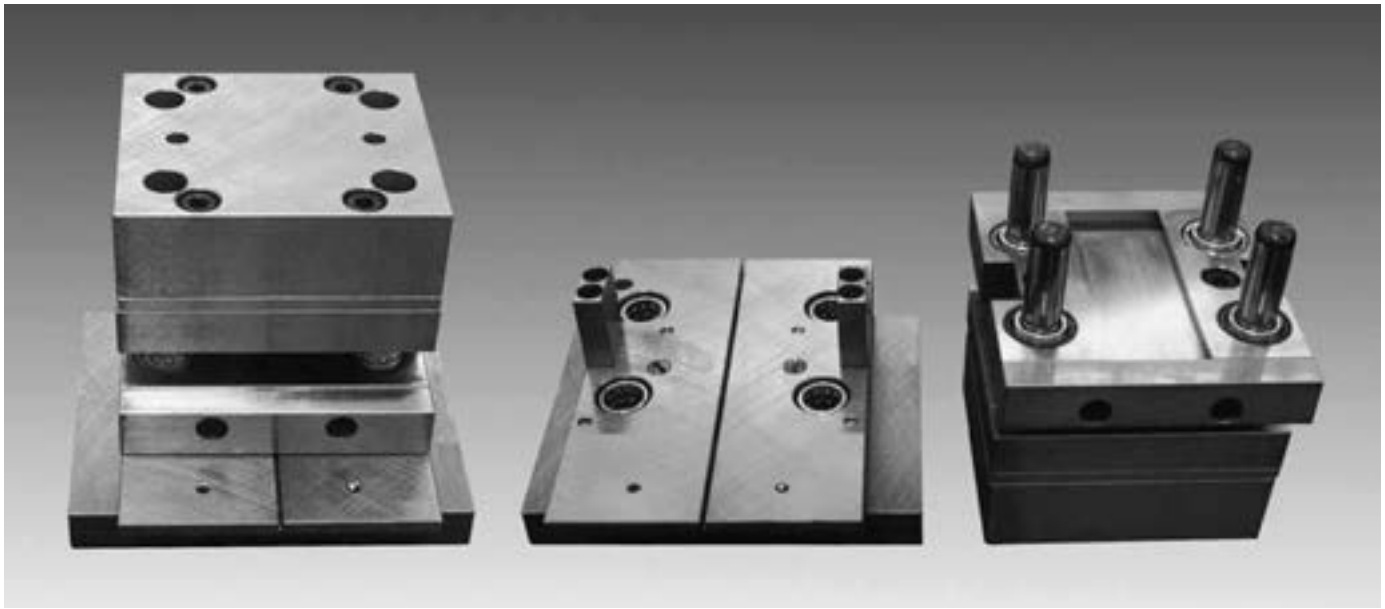

Special Die Set (All-Steel) to Customers‘ Specification







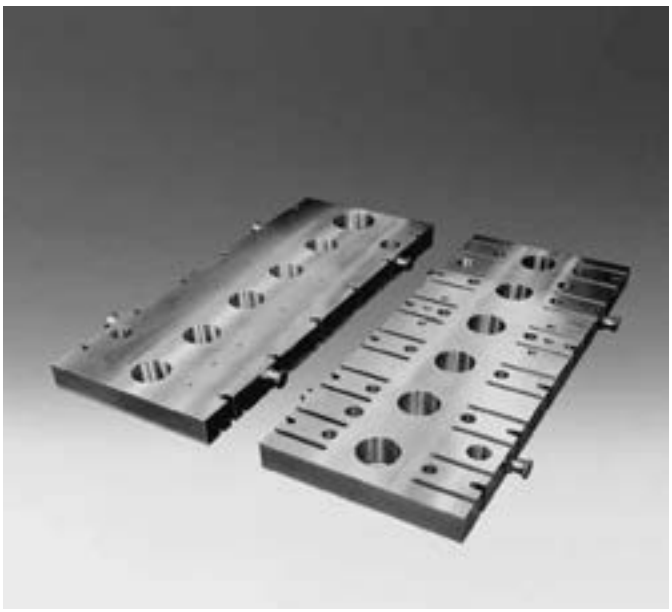



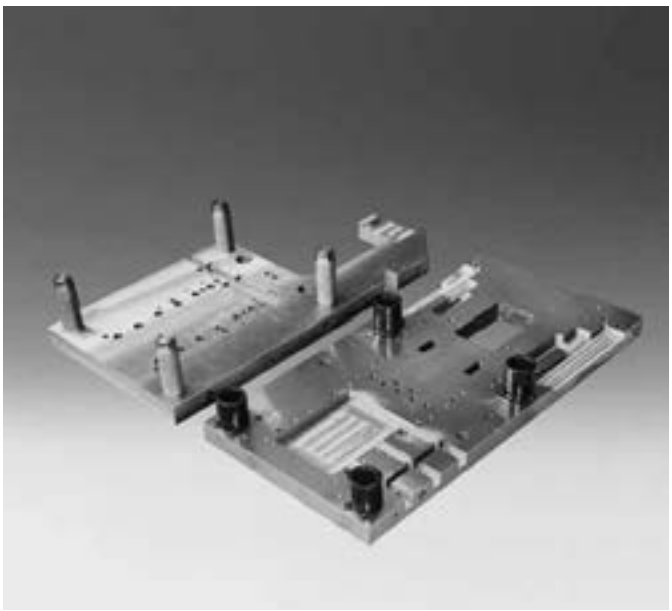

Special Die Set (All-Steel) to Customers‘ Specification

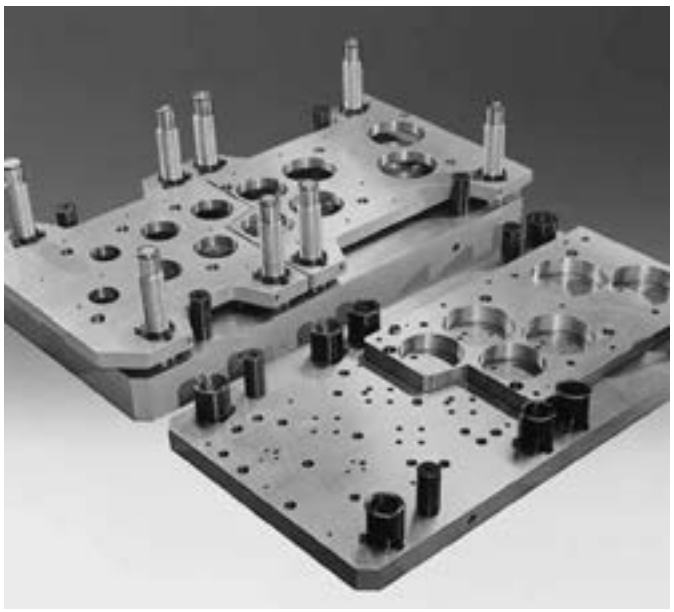

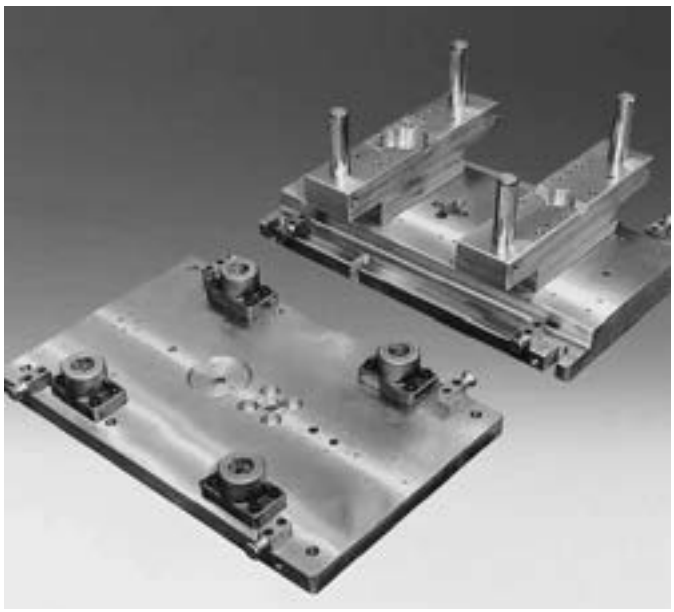

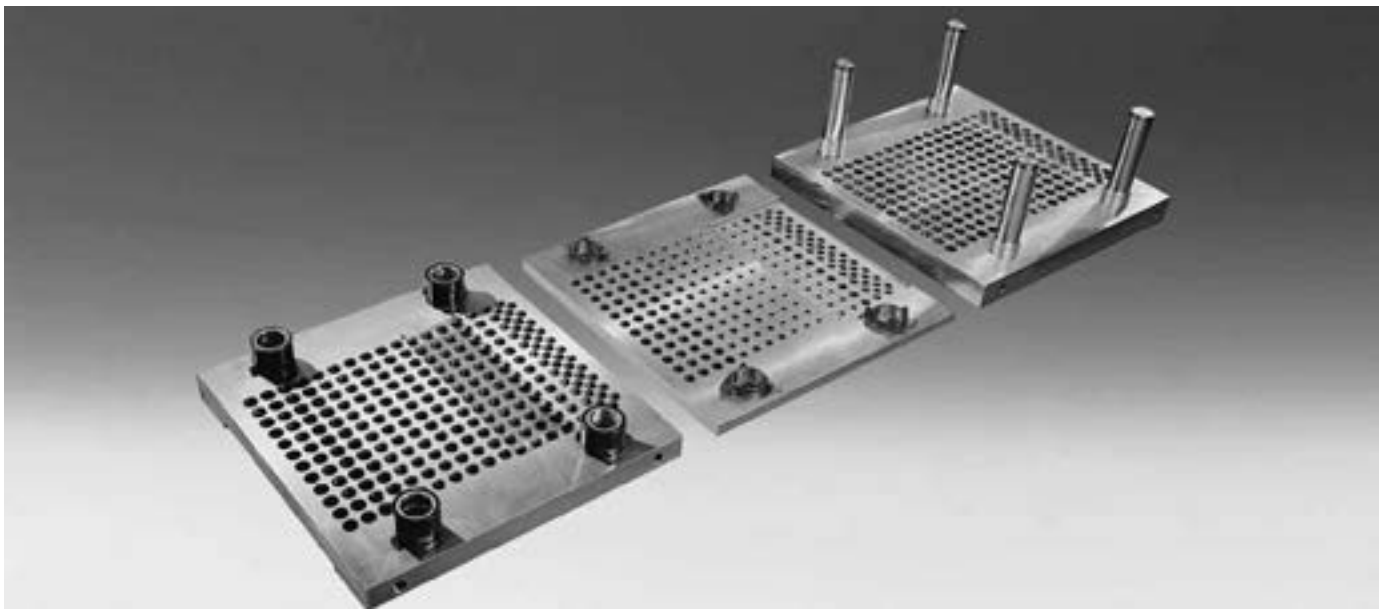

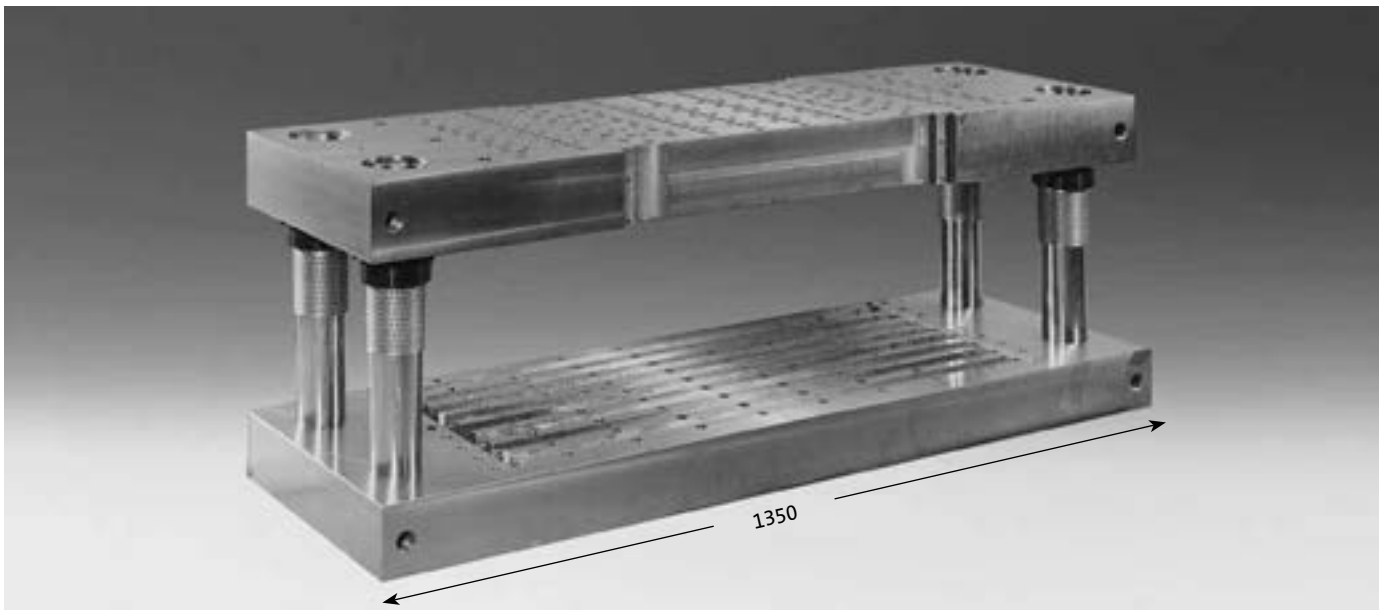

Special Die Set (All-Steel) to Customers‘ Specification

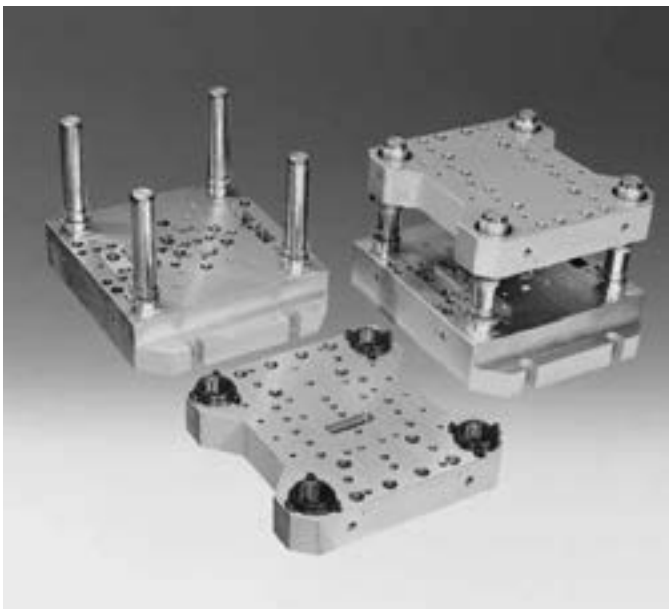

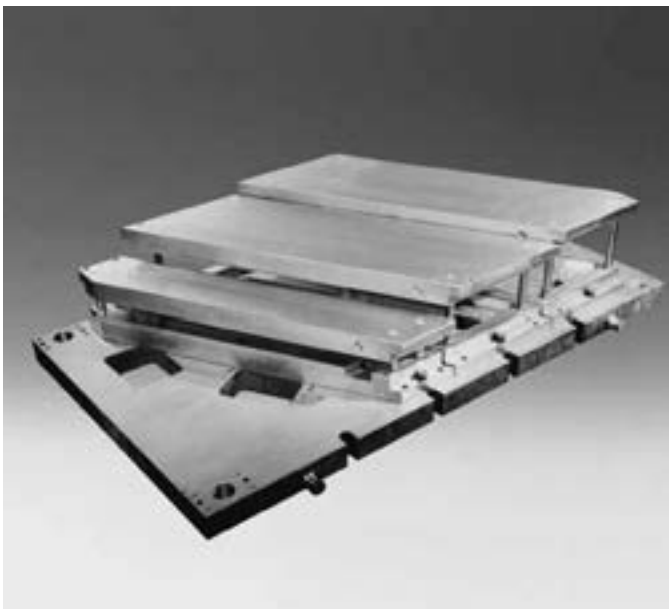

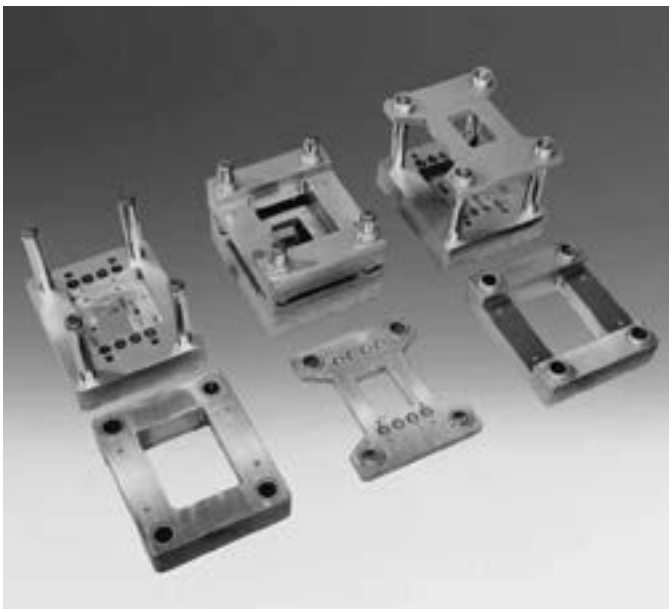

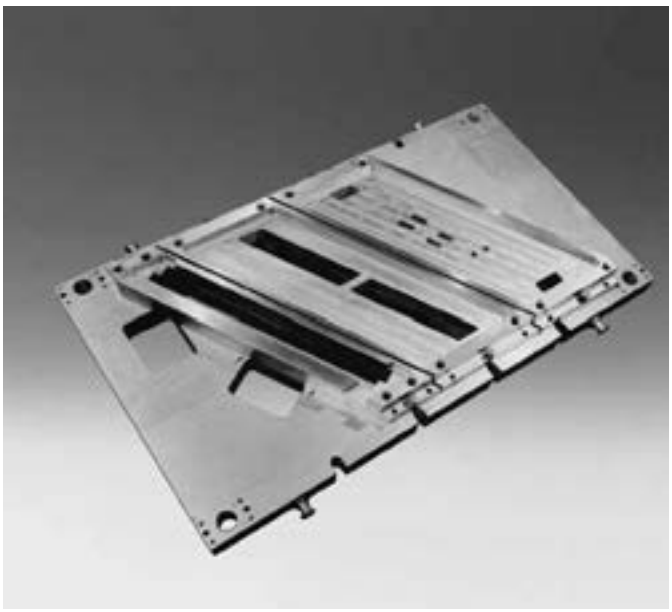

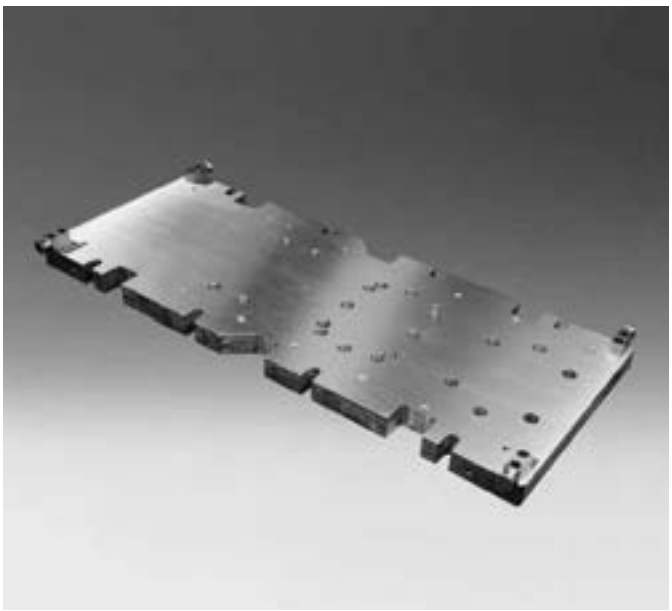

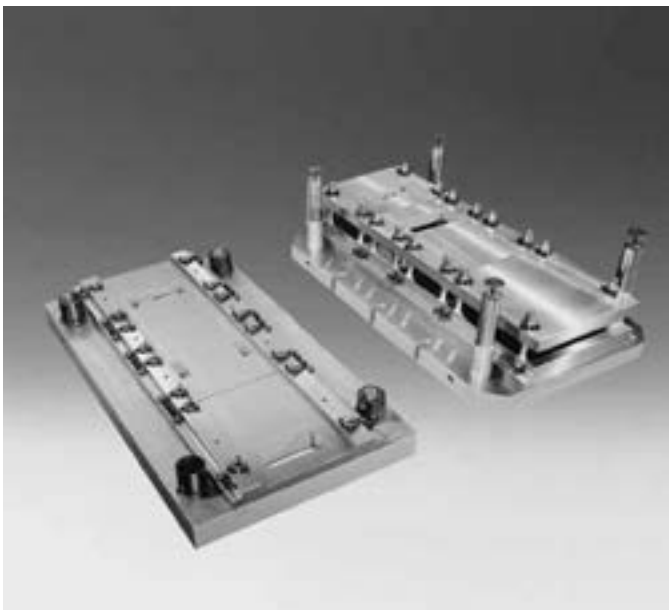



Progression Lamination Die Set Units

Progression Lamination Die Set Unit

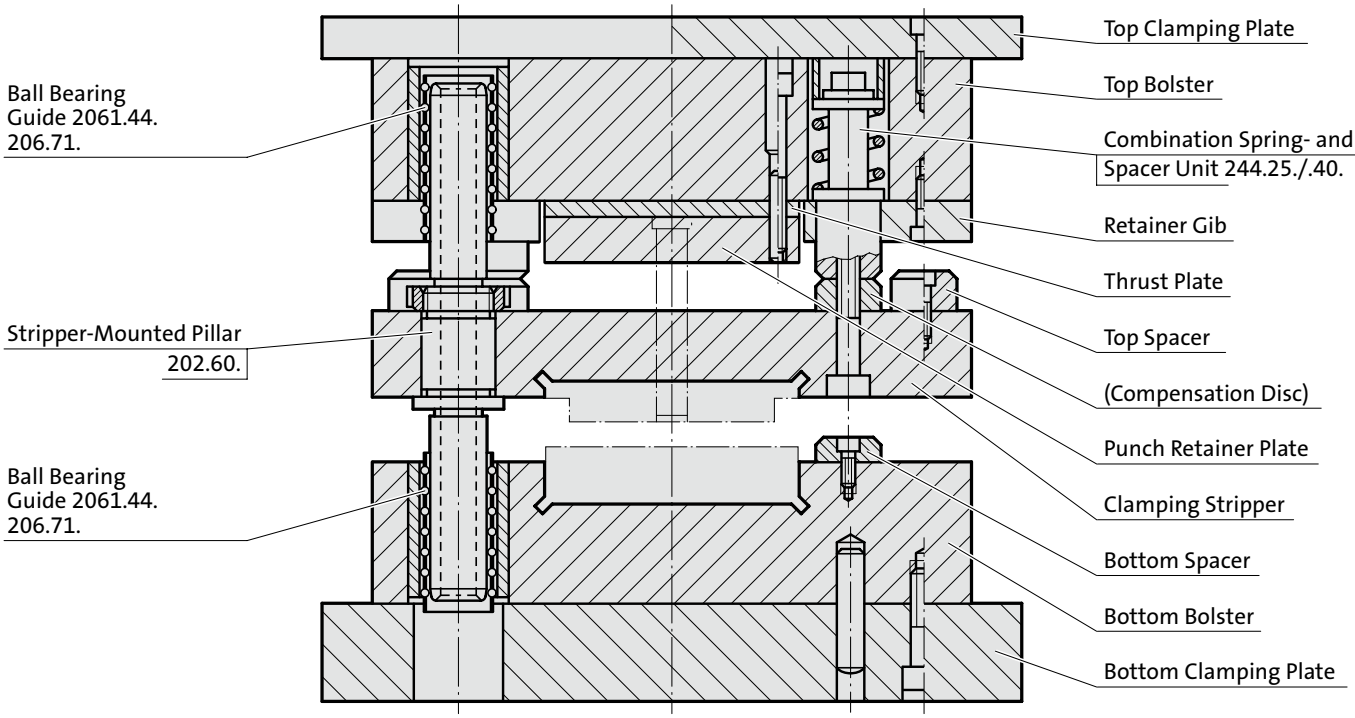

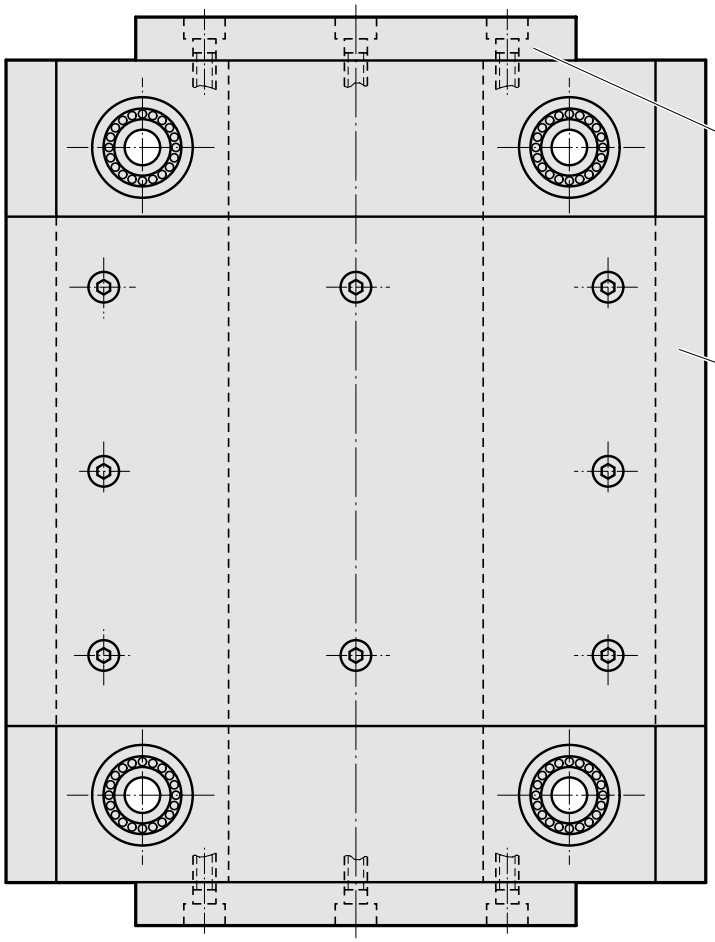

subject to alterations

Progression lamination die set unit

Die set units for progression/lamination dies

The accuracy of a stamping die starts with the die set! When we designed these new units, special attention was paid to the stability and load capacity of the guide pillars.

The eventual introduction of the stripper-mounted pillar in its present form brought an eightfold increase in transverse load-carrying capacity relative to conventional pillars; under the same radial force, deflection is reduced to one-eigth.

While modern high-speed presses have made ball bearing guides all but mandatory, the limited load capacity of these bearings remains a disadvantage, calling for generous nominal pillar diameters and the use of more than two guide bearings.

Considerable forces of inertia are encountered during the reversal of stroking motion at speeds in excess of 500 SPM. In order to keep these harmful forces to a minimum, FIBRO Stripper-Mounted Pillars are provided with hollow cores.

Considerations such as these formed the basis for the development of our new die set units with stripper-mounted pillars – a concept that has resulted in greatly improved accuracy, overall stability and speed capacity.

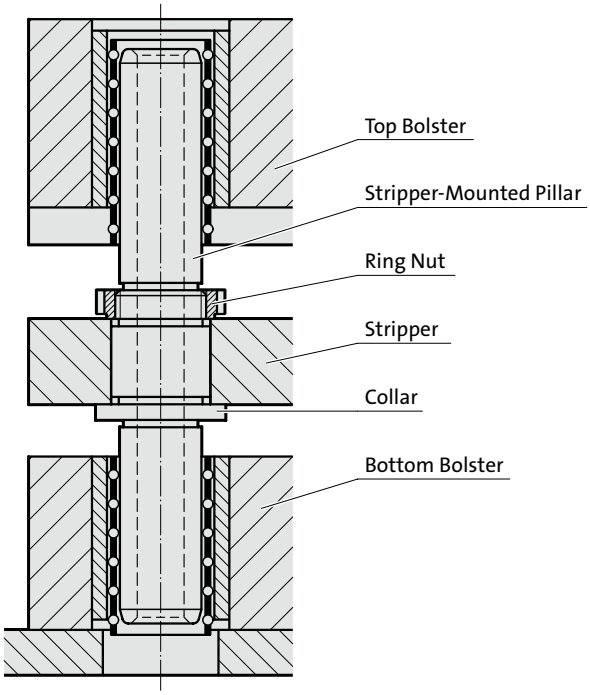

Combination spring/spacer units

Strippers on FIBRO progression/lamination die set units are laid out for the functions of punch guiding and clamping of the stock, derived from preloaded spring/spacing units of highly compact design.

The advantages of these compact units, in accordance with executions 1 to 4, are as follows:

a) compactness – the combination of both spring- and spacer functions saves die space

b) ease of die maintenance – punch regrinding and replacement, as well as dimensional adaptation, can be done without dismantling of the stripper.
Note: regrinding of punches = regrinding of spacer!

c) ease of springs maintenance – after removal of only the top clamping plate, the complete spring/spacer unit can be taken out for replacement etc. This feature applies to executions 1 and 2 only.

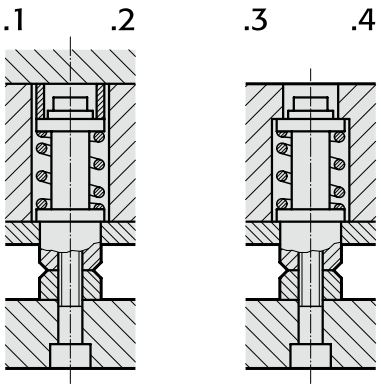

Retaining slots for matrixes and guiding-stripper plate

It is of paramount importance to the accuracy of the final die assembly that both these slots are in perfect vertical alignment, to within a few mm.

From long experience we know that all heavy machining of die set apertures must precede the finish-machining of the two retainer slots for the matrix inserts and the guiding/clamping stripper plate.

Whenever the machining of such apertures is not entrusted to us we will supply our die set units with pre-ground slots only.

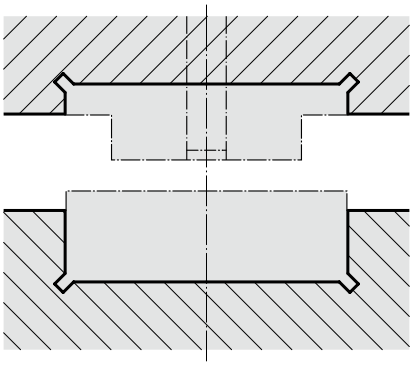

FIBRO

Progression Lamination Die Set Unit

201.50.

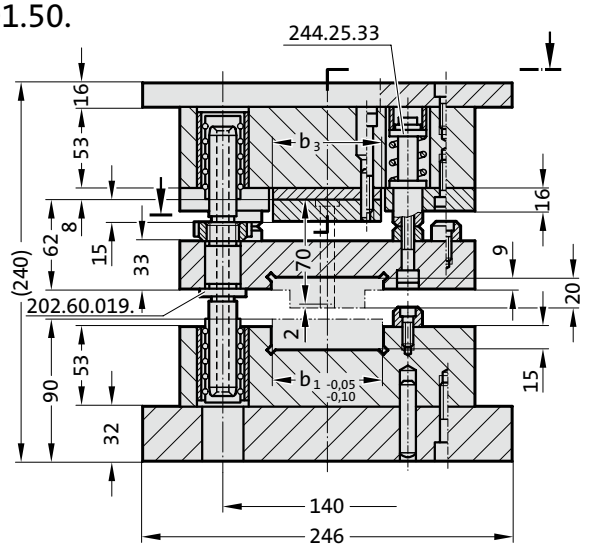

* For the sizes 201.50.2520 and 3020 guide pillars 202.60.025

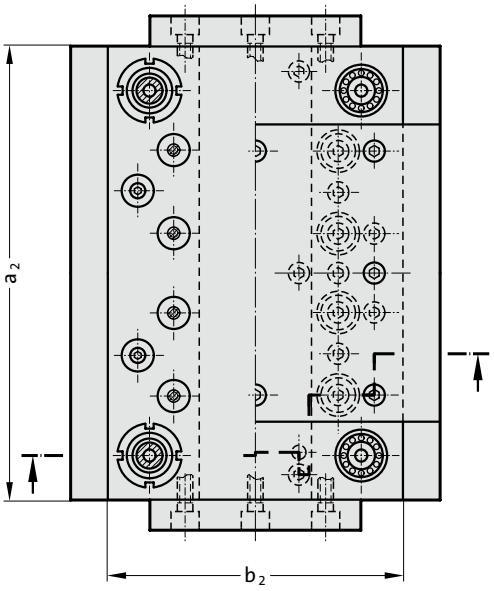

Executions

(mounting of top bolster to ram of press)

201.50. □□□□.□□□.□□.1
with projecting top clamping plate

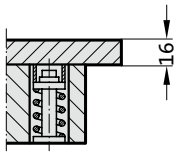

201.50. □□□□.□□□.□□.2
with threaded hole in top clamping plate, for threaded shank

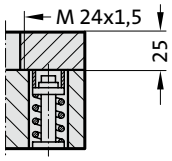

201.50. □□□□.□□□.□□.3
with threaded hole in top bolster, for threaded shank

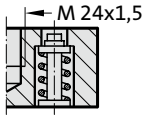

201.50. □□□□.□□□.□□.4
with clamping pockets milled in top bolster

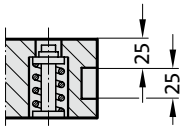

Guide Elements

Ball Bearing Guides

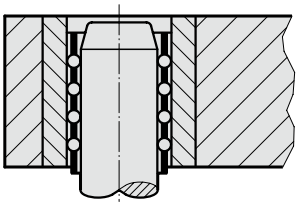

Width of slot b_1 to be determined by customer!

2D-CAD data are available on request for each Die Set Unit.
The designer need only draw the active die elements.
Prints can be taken from this master.

Die daylight and strip height can be reduced by up to 3 mm through a reduction in the thickness of the Bottom Clamping Plate.

201.50. Progression Lamination Die Set Unit

Order No Type	Size	b_1	Spring Type	Exec.	ext. dims $a_2 \times b_2$	b_1 max.	Comb. spring+ spacer unit	b_3	max. spring compr. (without pre load) (mm) 241... 14	15	16	spring preload (mm)	preloading in N (per spring unit) 241.□□.25.032 14	15	16	17	spring coefficient "c" (N) 241.□□.25.032 14	15	16	17
201.50.	1320.	□□□.	□□.	□	126 × 196	40	4	40	6,0	6,0	5,0	3	241	354	891	–	80,3	118,1	297	–
201.50.	1620.	□□□.	□□.	□	156 × 196	50	4	50	6,0	6,0	5,0	3	241	354	891	–	80,3	118,1	297	–
201.50.	2020.	□□□.	□□.	□	196 × 196	60	6	60	6,0	6,0	5,0	3	241	354	891	–	80,3	118,1	297	–
201.50.	2520.	□□□.	□□.	□	246 × 196	75	8	75	6,0	6,0	5,0	3	241	354	891	–	80,3	118,1	297	–
201.50.	3020.	□□□.	□□.	□	296 × 196	75	8	75	6,0	6,0	5,0	3	241	354	891	–	80,3	118,1	297	–

Ordering Code (example):

Die Set Unit	= 201.50.	
$a_2 \times b_2$ = 296 × 196	= 3020.	
b_1 = 75 mm	= 075.	
Springs (type) 241.15.	= 15.	
With projecting top clamping plate	= 1	Die Set Units 201.50. can also be supplied in special sizes
Order No	= 201.50.3020.075.15.1	as well as special executions, acc. to customers' specifications.

subject to alterations

Progression Lamination Die Set Unit

Executions

(mounting of top bolster to ram of press)

201.50.□□□□.□□□.□□.1
with projecting top clamping plate

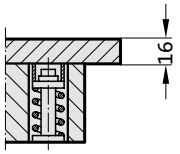

201.50.□□□□.□□□.□□.2
with threaded hole in top clamping plate, for threaded shank

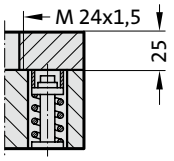

201.50.□□□□.□□□.□□.3
with threaded hole in top bolster, for threaded shank

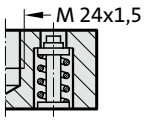

201.50.□□□□.□□□.□□.4
with clamping pockets milled in top bolster

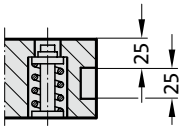

201.50.

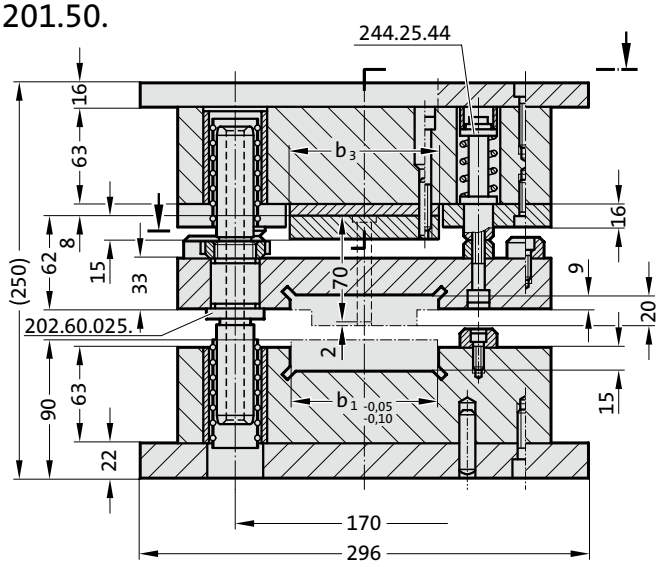

Guide Elements

Ball Bearing Guides

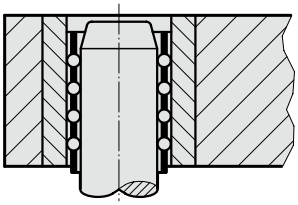

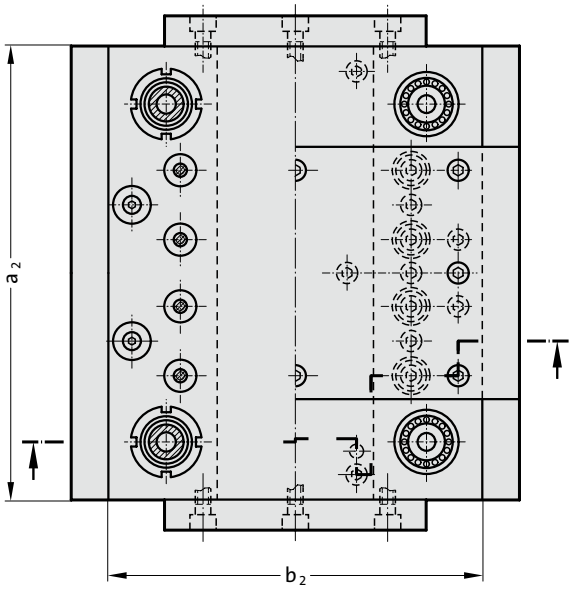

Width of slot b_1 to be determined by customer!

2D-CAD data are available on request for each Die Set Unit.
The designer need only draw the active die elements.
Prints can be taken from this master.

Die daylight and strip height can be reduced by up to 16 mm through a reduction in the thickness of the Bottom Clamping Plate.

201.50. Progression Lamination Die Set Unit

Order No Type	Size	b_1	Spring Type	Exec.	ext. dims $a_2 \times b_2$	b_1 max.	Comb. spring+ spacer unit	b_3	max. spring compr. (without pre load) (mm) 241... 14	15	16	17	spring preload (mm)	preloading in N (per spring unit) 241.□□.25.045 14	15	16	17	spring coefficient "c" (N) 241.□□.25.045 14	15	16	17
201.50.	1625.	□□□.	□□.	□	156 × 246	60	4	60	8,0	8,0	7,8	5,4	4	212	323	748	977	53	80,8	187	244,2
201.50.	2025.	□□□.	□□.	□	196 × 246	75	6	75	8,0	8,0	7,8	5,4	4	212	323	748	977	53	80,8	187	244,2
201.50.	2525.	□□□.	□□.	□	246 × 246	90	8	90	8,0	8,0	7,8	5,4	4	212	323	748	977	53	80,8	187	244,2
201.50.	3025.	□□□.	□□.	□	296 × 246	100	8	100	8,0	8,0	7,8	5,4	4	212	323	748	977	53	80,8	187	244,2
201.50.	3525.	□□□.	□□.	□	346 × 246	100	10	100	8,0	8,0	7,8	5,4	4	212	323	748	977	53	80,8	187	244,2

Ordering Code (example):

Die Set Unit	= 201.50.	
$a_2 \times b_2$ = 296 × 246	= 3025.	
b_1 = 100 mm	= 100.	
Springs (type) 241.15.	= 15.	
With projecting top clamping plate	= 1	Die Set Units 201.50. can also be supplied in special sizes
Order No	= 201.50.3025.100.15.1	as well as special executions, acc. to customers' specifications.

Progression Lamination Die Set Unit

201.50.

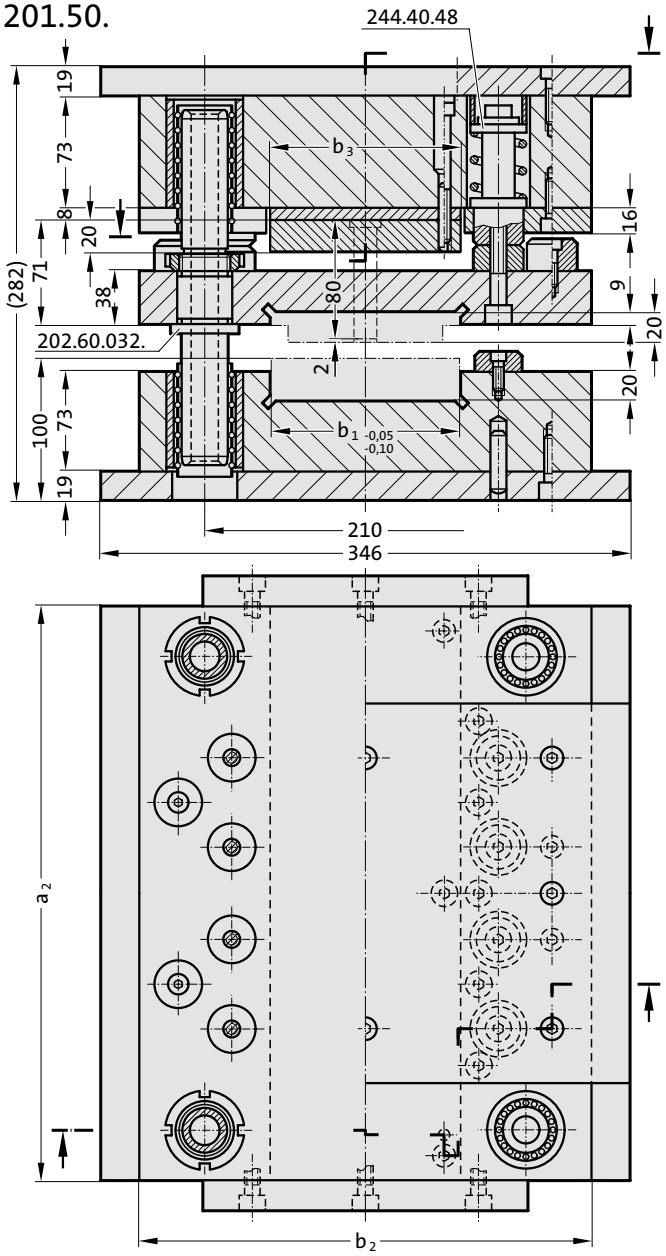

Executions

(mounting of top bolster to ram of press)

201.50.
□□□□.□□□.□□.1
with projecting top clamping plate

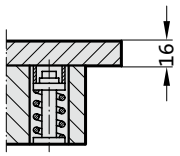

201.50.
□□□□.□□□.□□.2
with threaded hole in top clamping plate, for threaded shank

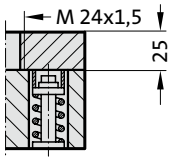

201.50.
□□□□.□□□.□□.3
with threaded hole in top bolster, for threaded shank

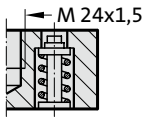

201.50.
□□□□.□□□.□□.4
with clamping pockets milled in top bolster

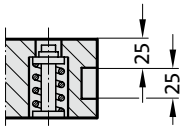

Guide Elements

Ball Bearing Guides

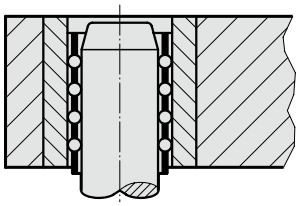

Width of slot b_1 to be determined by customer!

2D-CAD data are available on request for each Die Set Unit.
The designer need only draw the active die elements.
Prints can be taken from this master.

Die daylight and strip height can be reduced by up to 16 mm through a reduction in the thickness of the Bottom Clamping Plate.

201.50. Progression Lamination Die Set Unit

Order No Type	Size	b_1	Spring Type	Exec.	ext. dims $a_2 \times b_2$	b_1 max.	Comb. spring+ spacer unit	b_3	max. spring compr. (without pre load) (mm) 241... 14	15	16	17	spring preload (mm)	preloading in N (per spring unit) 241.□□.25.045 14	15	16	17	spring coefficient "c" (N) 241.□□.25.045 14	15	16	17
201.50.	2030.	□□□.	□□.	□	196 × 296	75	4	75	7,0	7,0	5,0	4,2	8	736	1432	2800	5027	92	179	350	628,4
201.50.	2530.	□□□.	□□.	□	246 × 296	100	6	100	7,0	7,0	5,0	4,2	8	736	1432	2800	5027	92	179	350	628,4
201.50.	3030.	□□□.	□□.	□	296 × 296	100	8	100	7,0	7,0	5,0	4,2	8	736	1432	2800	5027	92	179	350	628,4
201.50.	3530.	□□□.	□□.	□	346 × 296	125	8	125	7,0	7,0	5,0	4,2	8	736	1432	2800	5027	92	179	350	628,4
201.50.	4030.	□□□.	□□.	□	396 × 296	125	8	125	7,0	7,0	5,0	4,2	8	736	1432	2800	5027	92	179	350	628,4

Ordering Code (example):

Die Set Unit	= 201.50.	
$a_2 \times b_2$ = 296 × 296	= 3030.	
b_1 = 100 mm	= 100.	
Springs (type) 241.15.	= 15.	
With projecting top clamping plate	= 1	Die Set Units 201.50. can also be supplied in special sizes
Order No	= 201.50.3030.100.15.1	as well as special executions, acc. to customers' specifications.

subject to alterations



Tooling Pallet Die Sets

Fast Exchange System for Pallet Tooling

Description

The fast exchange of pallet-born tooling sets, with the concept of rapid mechanical positioning, meets the demands for:

- lowering of tooling cost
- reduction in setting costs
- faster response to market trends.

Instead of a multitude of complete die set-born press tools, the new system is based on a carrier die set with rapid-exchange features. This die set can remain in the press, while any number of tooling pallet sets can be accommodated expediently and precisely, one at a time.
There are no individual guide elements associated with a tooling pallet set – the necessary guiding remains a function of the carrier die set exclusively.

Tooling pallet sets are mounted to standard carrier plates – the top and bottom tooling simply slides into position, where a stop provides the positioning control, to allow entry of the locating pins upon the required half-turn of each of the four pin actuation levers on the die set. With the tooling pallets now positioned accurately, the hexagonal clamping screws at the front of the die set can be turned with a box spanner, each activating one clamp via an internal cam, moved by threading action of the screw. The cam angle is such that self-locking is obtained.

Press Tool Types

Sets of pallet tooling can be designed as:

- combination progression tools
- compound tools
- draw dies
- bending- and forming dies
- combination tools etc.

Setting and Tryout Aids

The absence of individual guide elements is a fundamental feature of tooling pallet sets which greatly assists the overall economy of the system. In order to facilitate the aligning of top- and bottom tooling, conical centring units can be fitted, thus providing alignment between both members by direct means – even outside the carrier die set, on the toolmaker's bench.

As a further aid for setting and tryout of pallet sets we offer the FIBRO Aligning- and Tryout Press Unit 201.98. with simplified but basically similar positioning- and locking features as the carrier die set.

Fast Exchange System for Pallet Tooling

Setting

- slide each pallet into its position
- positioning
- clamping

These steps can be completed in a minute.

Slide-In Insertion

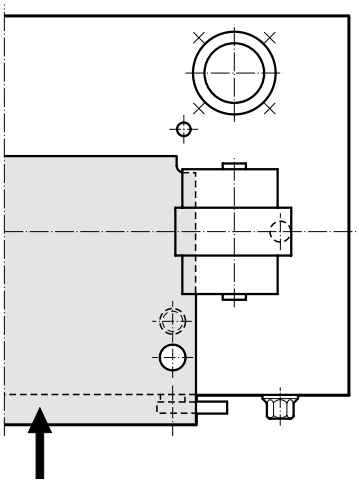

Positioning

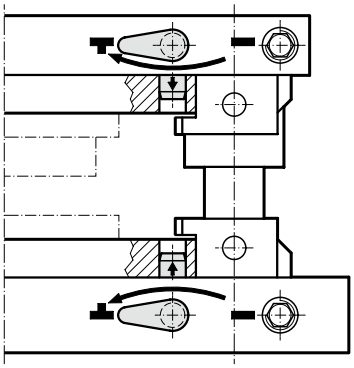

Clamping

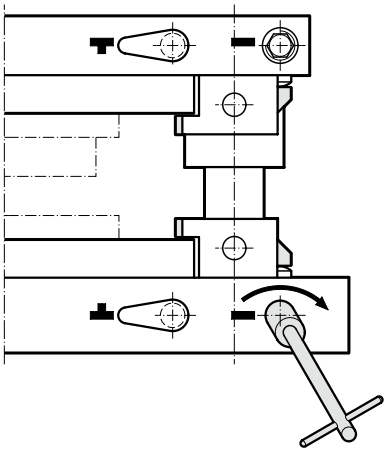

Positioning Aids

Pallet tooling sets can be equipped with conical centring units.

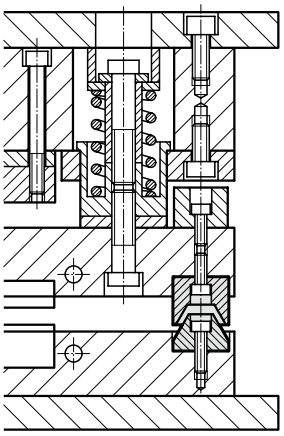

Sheet Thicknesses

Sheet less than 0,4 mm in thickness is normally not recommended for the system – on account of the smaller punch-to-die clearances associated with thin stock materials, where the normal positioning accuracy within the carrier die set (approximately 0,02 mm) becomes insufficient.

However, through fitting of conical centring units the overall alignment accuracy can be improved to an extent where even sheet below 0,4 mm thickness can be processed successfully.

Fast Exchange System for Pallet Tooling

Top Bolster of Pallet Die Set

1 top bolster
2 pallet carrier plate – for slide-in insertion
3 guide bushes – optionally sliding –
or ball bearing guides
4 clamp
5 positioning pin – descends below surface
6 positioning pin lever
7 stop pin
8 clamping screw

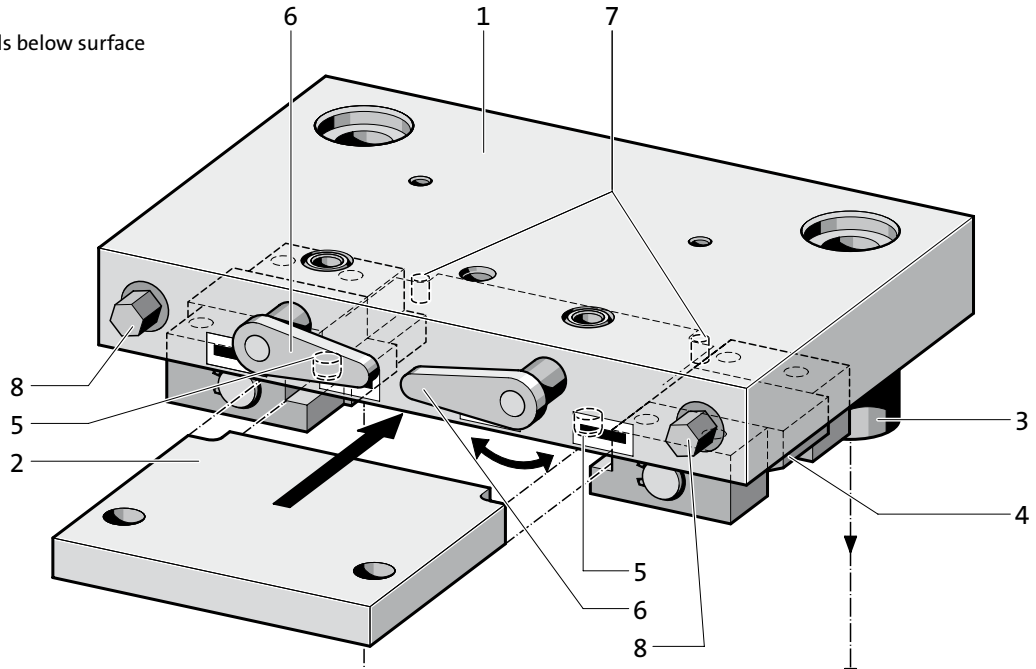

Bottom Bolster of Pallet Die Set

1 bottom bolster
2 pallet carrier plate – for slide-in insertion
3 guide pillar
4 clamp
5 positioning pin – descends below surface
6 positioning pin lever
7 stop pin
8 clamping screw
9 bolster insert plate
10 box spanner

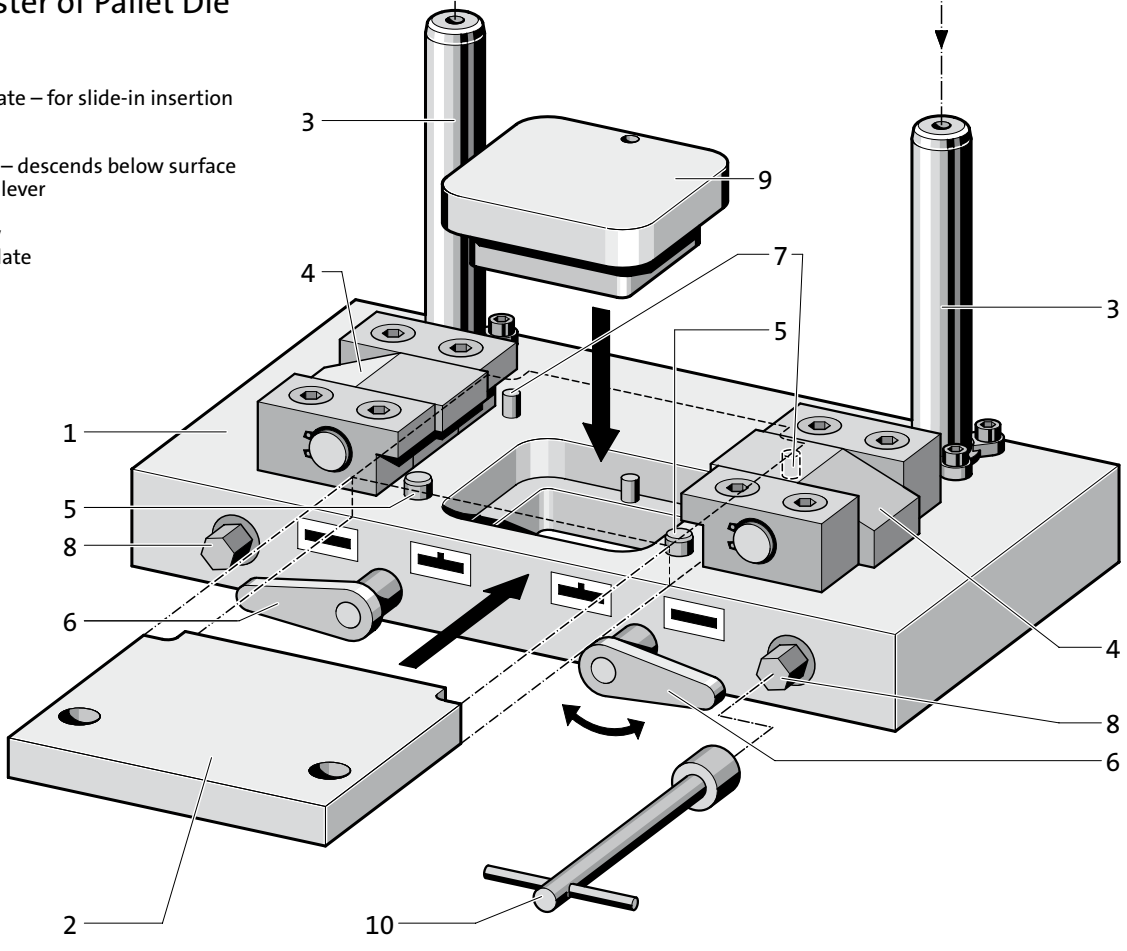

subject to alterations

Fast Exchange System for Pallet Tooling

201.95.

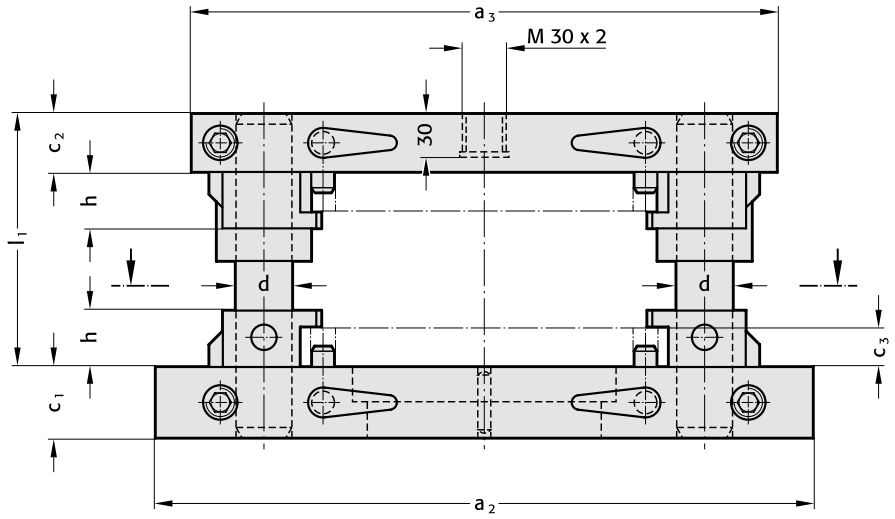

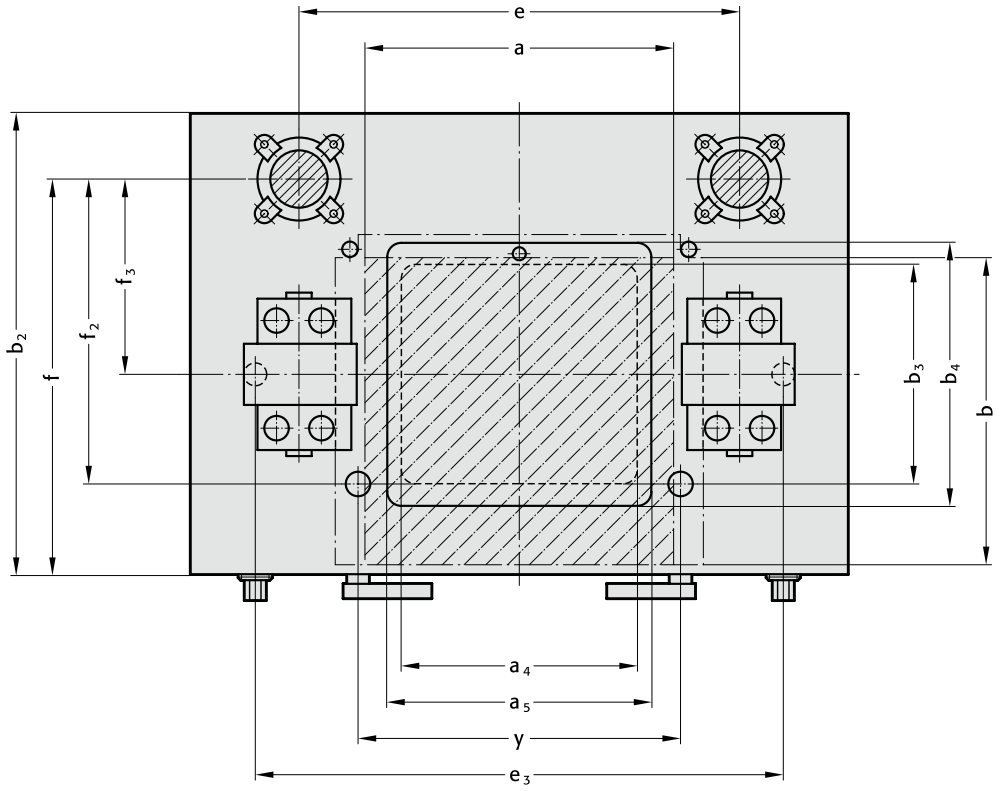

201.95. Fast Exchange System for Pallet Tooling

Order No	Type of guides*	work area a × b	a_2	a_3	a_4	a_5	b_2	b_3	b_4	c_1	c_2	c_3	d	e	y	e_3	f	f_2	f_3	h	l_1
201.95.1010.		100 × 100	350	300	80,5	–	200	60	80,5	40	40	16	25	220	120	260	168	113	93	29	160
201.95.2121.		210 × 210	450	400	161	180,2	315	150	180,2	50	40	25	40	300	220	360	270	208	133	38	180
201.95.3030.		300 × 300	550	500	241	270,5	420	220	250,5	63	40	25	40	380	320	460	365	305	185	38	180
201.95.3521.		350 × 210	600	550	320	–	315	120	150	50	40	25	40	450	370	510	270	208	133	38	180

* Type of guides: 831 for sliding guides or 862 for ball guides

Pallet Carrier Plate
Bolster Insert Plate

Pallet Carrier Plates

For each pallet tooling set, two carrier plates 201.96. are required – one for mounting the top tooling details, the other for the bottom tooling.

The tooling components are dowelled into position.

201.96.

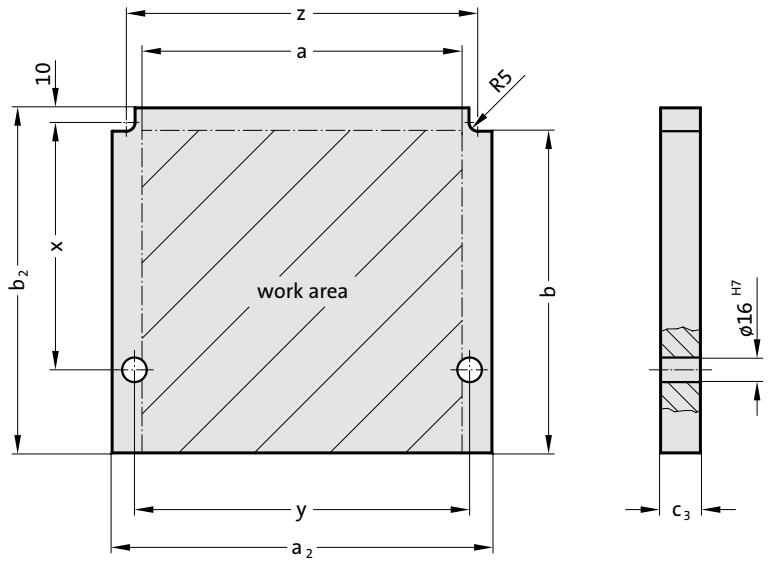

201.96. Pallet Carrier Plate

Order No	work area a × b	a_2	b_2	c_3	x	y	z
201.96.1010	100 × 100	150	115	16	50,1	120	130
201.96.2121	210 × 210	250	225	25	160,1	220	230
201.96.3030	300 × 300	350	315	25	250,1	320	330
201.96.3521	350 × 210	400	225	25	160,1	370	380

Bolster Insert Plates

This insert plate has to be added to a tooling pallet set if:

- scrap holes near the centre require additional support
- spring cushions or bottom ejectors have to be employed
- other features of specific die designs require an individual insert plate

Bolster insert plates have a dowel that makes them non-reversible.

201.97.

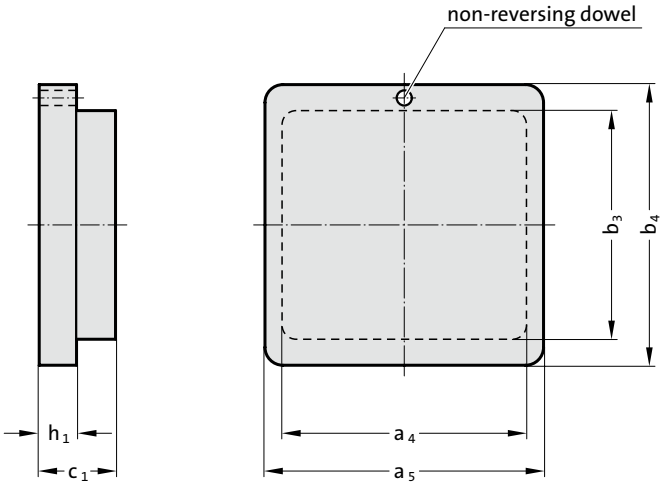

201.97. Bolster Insert Plate

Order No	work area a × b	a_4	a_5	b_3	b_4	c_1	h_1
201.97.1010	100 × 100	80	–	60	80	40	20
201.97.2121	210 × 210	160	180	150	180	50	25
201.97.3030	300 × 300	240	270	220	250	63	30
201.97.3521	350 × 210	320	–	120	150	50	25

subject to alterations

Aligning- and Tryout Press Unit

201.98.

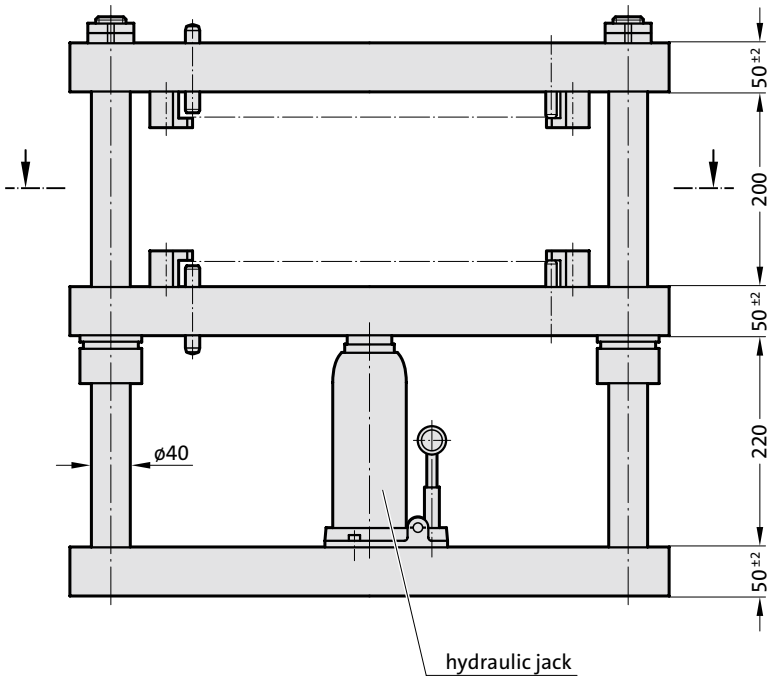

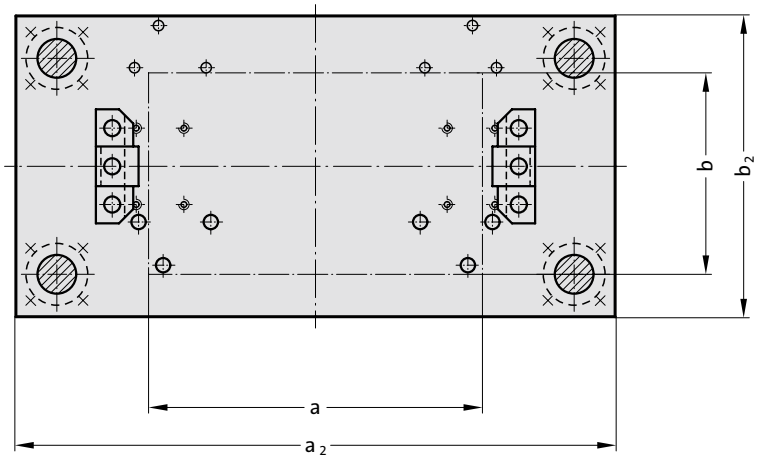

Description

These press units have manual actuation by way of a hydraulic jack which forces the guided bolster upwards. In the toolroom they serve as tryout- and setting press, especially for tooling pallet sets. For the latter purpose they are equipped with simplified but functionally similar features for positioning and clamping as those in FIBRO Tooling Pallet Die Sets.

Moreover the press units provide ideal facilities for the press-fitting of pillars and bushes etc. – or their removal. For blueing-in and tryout of all sorts of press tools they soon prove themselves as an indispensable workshop facility, with a maximum thrust of 10 tons.

Material:

Plate: St 52-2

Execution:

Headed ball bearing guide bushes, hydraulic jack, 10 tons capacity

201.98. Aligning- and Tryout Press Unit

Order No	work area a × b	a_2	b_2
201.98.1010.863	100 × 100	315	250
201.98.3030.863	210 × 210	630	315
201.98.3030.863	300 × 300	630	315
201.98.3030.863	350 × 210	630	315

A Die Sets

B Precision Ground Plates and Flat Bars

Steel and aluminium plates, flat and square tool steels
Precision feeler gauges, foil shims

C Lifting and Clamping Devices

D Guide elements

E Ground Precision Components

F Springs

G Elastomer-Bars, -Sheets, -Sections

H FIBRO Chemical Tooling Aids

J Peripheral Equipment

K Cam Units

L Standard Parts for Mould Making



Precision Ground Plates and Flat Bars

FIBRO

Contents

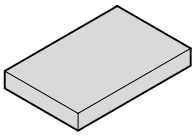

2900. B6

Steel plate ISO 6753-1

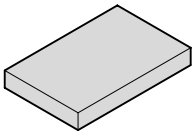

2910. B7

Aluminium plate ~ISO 6753-1

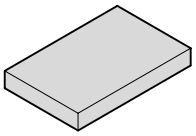

2922.1730. B8

Precision flat and square bar steel, ~DIN 59350

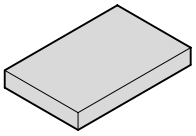

2923.0570. B9

Precision flat and square bar steel with machining allowance, DIN 59350

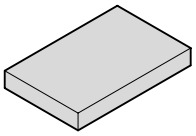

2923.2099. B10

Precision flat and square bar steel with machining allowance, DIN 59350

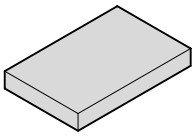

2923.2162. B11

Precision flat and square bar steel with machining allowance, DIN 59350

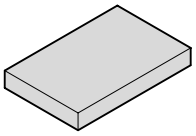

2923.2312. B12

Precision flat and square bar steel with machining allowance, DIN 59350

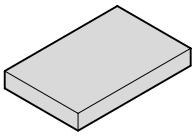

2923.2343. B13

Precision flat and square bar steel with machining allowance, DIN 59350

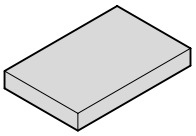

2923.2363. B14

Precision flat and square bar steel with machining allowance, DIN 59350

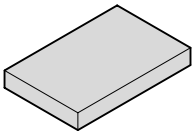

2923.2379. B15

Precision flat and square bar steel with machining allowance, DIN 59350

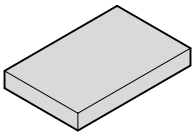

2923.2436. B16

Precision flat and square bar steel with machining allowance, DIN 59350

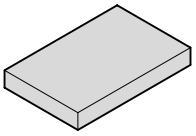

2923.2767. B17

Precision flat and square bar steel with machining allowance, DIN 59350

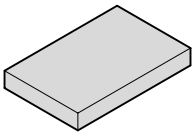

2922.2842. B18

Precision flat and square bar steel, DIN 59350

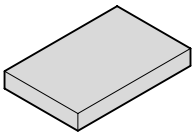

2923.2842. B19

Precision flat and square bar steel with machining allowance, DIN 59350

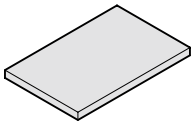

2925. B20

Precision feeler gauge

Steel plate ISO 6753-1

2900.

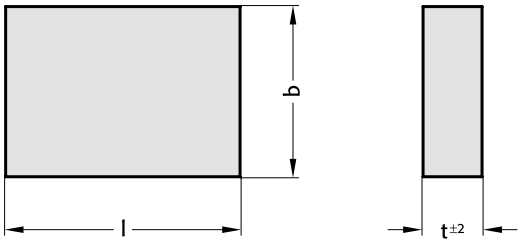

Execution:
External contours milled, thickness surfaces ground

Note:
l or b ≤ 630 = +0,2 / +0,4

l or b > 630 = +0,2 / +0,6

Plates from 500 × 500 mm on are manufactured with lifting thread.

2900. Steel plate ISO 6753-1

Order No	Size l x b x t	Order No	Size l x b x t	Order No	Size l x b x t
2900.1608.25	160 x 80 x 25	2900.3120.40	315 x 200 x 40	2900.6340.32	630 x 400 x 32
2900.1608.32	160 x 80 x 32	2900.3120.50	315 x 200 x 50	2900.6340.40	630 x 400 x 40
2900.1610.25	160 x 100 x 25	2900.3125.32	315 x 250 x 32	2900.6340.50	630 x 400 x 50
2900.1610.32	160 x 100 x 32	2900.3125.40	315 x 250 x 40	2900.6340.63	630 x 400 x 63
2900.1612.25	160 x 125 x 25	2900.3125.50	315 x 250 x 50	2900.6350.32	630 x 500 x 32
2900.1612.32	160 x 125 x 32	2900.3131.32	315 x 315 x 32	2900.6350.40	630 x 500 x 40
2900.1616.25	160 x 160 x 25	2900.3131.40	315 x 315 x 40	2900.6350.50	630 x 500 x 50
2900.1616.32	160 x 160 x 32	2900.3131.50	315 x 315 x 50	2900.6350.63	630 x 500 x 63
2900.2010.25	200 x 100 x 25	2900.4020.32	400 x 200 x 32	2900.6363.32	630 x 630 x 32
2900.2010.32	200 x 100 x 32	2900.4020.40	400 x 200 x 40	2900.6363.40	630 x 630 x 40
2900.2010.40	200 x 100 x 40	2900.4020.50	400 x 200 x 50	2900.6363.50	630 x 630 x 50
2900.2012.25	200 x 125 x 25	2900.4025.32	400 x 250 x 32	2900.6363.63	630 x 630 x 63
2900.2012.32	200 x 125 x 32	2900.4025.40	400 x 250 x 40	2900.7140.32	710 x 400 x 32
2900.2012.40	200 x 125 x 40	2900.4025.50	400 x 250 x 50	2900.7140.40	710 x 400 x 40
2900.2016.25	200 x 160 x 25	2900.4031.32	400 x 315 x 32	2900.7140.50	710 x 400 x 50
2900.2016.32	200 x 160 x 32	2900.4031.40	400 x 315 x 40	2900.7140.63	710 x 400 x 63
2900.2016.40	200 x 160 x 40	2900.4031.50	400 x 315 x 50	2900.7150.32	710 x 500 x 32
2900.2020.25	200 x 200 x 25	2900.4040.32	400 x 400 x 32	2900.7150.40	710 x 500 x 40
2900.2020.32	200 x 200 x 32	2900.4040.40	400 x 400 x 40	2900.7150.50	710 x 500 x 50
2900.2020.40	200 x 200 x 40	2900.4040.50	400 x 400 x 50	2900.7150.63	710 x 500 x 63
2900.2512.25	250 x 125 x 25	2900.5025.32	500 x 250 x 32	2900.7163.32	710 x 630 x 32
2900.2512.32	250 x 125 x 32	2900.5025.40	500 x 250 x 40	2900.7163.40	710 x 630 x 40
2900.2512.40	250 x 125 x 40	2900.5025.50	500 x 250 x 50	2900.7163.50	710 x 630 x 50
2900.2516.25	250 x 160 x 25	2900.5031.32	500 x 315 x 32	2900.7163.63	710 x 630 x 63
2900.2516.32	250 x 160 x 32	2900.5031.40	500 x 315 x 40	2900.8040.32	800 x 400 x 32
2900.2516.40	250 x 160 x 40	2900.5031.50	500 x 315 x 50	2900.8040.40	800 x 400 x 40
2900.2520.25	250 x 200 x 25	2900.5040.32	500 x 400 x 32	2900.8040.50	800 x 400 x 50
2900.2520.32	250 x 200 x 32	2900.5040.40	500 x 400 x 40	2900.8040.63	800 x 400 x 63
2900.2520.40	250 x 200 x 40	2900.5040.50	500 x 400 x 50	2900.8050.32	800 x 500 x 32
2900.2525.25	250 x 250 x 25	2900.5050.32	500 x 500 x 32	2900.8050.40	800 x 500 x 40
2900.2525.32	250 x 250 x 32	2900.5050.40	500 x 500 x 40	2900.8050.50	800 x 500 x 50
2900.2525.40	250 x 250 x 40	2900.5050.50	500 x 500 x 50	2900.8050.63	800 x 500 x 63
2900.3116.32	315 x 160 x 32	2900.6331.32	630 x 315 x 32	2900.8063.32	800 x 630 x 32
2900.3116.40	315 x 160 x 40	2900.6331.40	630 x 315 x 40	2900.8063.40	800 x 630 x 40
2900.3116.50	315 x 160 x 50	2900.6331.50	630 x 315 x 50	2900.8063.50	800 x 630 x 50
2900.3120.32	315 x 200 x 32	2900.6331.63	630 x 315 x 63	2900.8063.63	800 x 630 x 63

subject to alterations

Aluminium plate ~ISO 6753-1

2910. .2

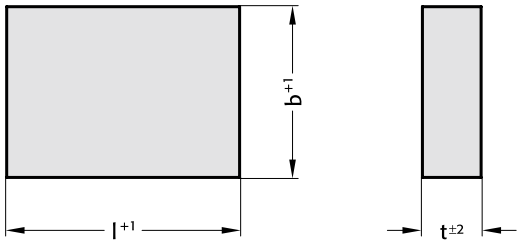

Execution:
2910.□□□□.□□.2
Two external contours milled. Thickness surfaces ground.

Note:
Plates from 500 × 500 mm on are manufactured with lifting thread.

2910. .0

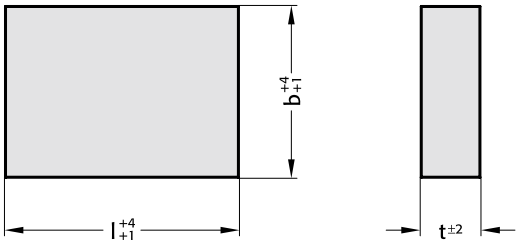

Execution:
2910.□□□□.□□.0
External contours sawed, Thickness surfaces ground.

Note:
Plates from 500 × 500 mm on are manufactured with lifting thread.

2910. Aluminium plate ~ISO 6753-1

Order No	Size l x b x t	Order No	Size l x b x t	Order No	Size l x b x t	Order No	Size l x b x t
2910.1608.25.□	160 x 80 x 25	2910.2520.32.□	250 x 200 x 32	2910.4040.40.□	400 x 400 x 40	2910.6363.40.□	630 x 630 x 40
2910.1608.32.□	160 x 80 x 32	2910.2520.40.□	250 x 200 x 40	2910.4040.50.□	400 x 400 x 50	2910.6363.50.□	630 x 630 x 50
2910.1610.25.□	160 x 100 x 25	2910.2525.25.□	250 x 250 x 25	2910.5025.32.□	500 x 250 x 32	2910.6363.63.□	630 x 630 x 63
2910.1610.32.□	160 x 100 x 32	2910.2525.32.□	250 x 250 x 32	2910.5025.40.□	500 x 250 x 40	2910.7140.32.□	710 x 400 x 32
2910.1612.25.□	160 x 125 x 25	2910.2525.40.□	250 x 250 x 40	2910.5025.50.□	500 x 250 x 50	2910.7140.40.□	710 x 400 x 40
2910.1612.32.□	160 x 125 x 32	2910.3116.32.□	315 x 160 x 32	2910.5031.32.□	500 x 315 x 32	2910.7140.50.□	710 x 400 x 50
2910.1616.25.□	160 x 160 x 25	2910.3116.40.□	315 x 160 x 40	2910.5031.40.□	500 x 315 x 40	2910.7140.63.□	710 x 400 x 63
2910.1616.32.□	160 x 160 x 32	2910.3116.50.□	315 x 160 x 50	2910.5031.50.□	500 x 315 x 50	2910.7150.32.□	710 x 500 x 32
2910.2010.25.□	200 x 100 x 25	2910.3120.32.□	315 x 200 x 32	2910.5040.32.□	500 x 400 x 32	2910.7150.40.□	710 x 500 x 40
2910.2010.32.□	200 x 100 x 32	2910.3120.40.□	315 x 200 x 40	2910.5040.40.□	500 x 400 x 40	2910.7150.50.□	710 x 500 x 50
2910.2010.40.□	200 x 100 x 40	2910.3120.50.□	315 x 200 x 50	2910.5040.50.□	500 x 400 x 50	2910.7150.63.□	710 x 500 x 63
2910.2012.25.□	200 x 125 x 25	2910.3125.32.□	315 x 250 x 32	2910.5050.32.□	500 x 500 x 32	2910.7163.32.□	710 x 630 x 32
2910.2012.32.□	200 x 125 x 32	2910.3125.40.□	315 x 250 x 40	2910.5050.40.□	500 x 500 x 40	2910.7163.40.□	710 x 630 x 40
2910.2012.40.□	200 x 125 x 40	2910.3125.50.□	315 x 250 x 50	2910.5050.50.□	500 x 500 x 50	2910.7163.50.□	710 x 630 x 50
2910.2016.25.□	200 x 160 x 25	2910.3131.32.□	315 x 315 x 32	2910.6331.32.□	630 x 315 x 32	2910.7163.63.□	710 x 630 x 63
2910.2016.32.□	200 x 160 x 32	2910.3131.40.□	315 x 315 x 40	2910.6331.40.□	630 x 315 x 40	2910.8040.32.□	800 x 400 x 32
2910.2016.40.□	200 x 160 x 40	2910.3131.50.□	315 x 315 x 50	2910.6331.50.□	630 x 315 x 50	2910.8040.40.□	800 x 400 x 40
2910.2020.25.□	200 x 200 x 25	2910.4020.32.□	400 x 200 x 32	2910.6331.63.□	630 x 315 x 63	2910.8040.50.□	800 x 400 x 50
2910.2020.32.□	200 x 200 x 32	2910.4020.40.□	400 x 200 x 40	2910.6340.32.□	630 x 400 x 32	2910.8040.63.□	800 x 400 x 63
2910.2020.40.□	200 x 200 x 40	2910.4020.50.□	400 x 200 x 50	2910.6340.40.□	630 x 400 x 40	2910.8050.32.□	800 x 500 x 32
2910.2512.25.□	250 x 125 x 25	2910.4025.32.□	400 x 250 x 32	2910.6340.50.□	630 x 400 x 50	2910.8050.40.□	800 x 500 x 40
2910.2512.32.□	250 x 125 x 32	2910.4025.40.□	400 x 250 x 40	2910.6340.63.□	630 x 400 x 63	2910.8050.50.□	800 x 500 x 50
2910.2512.40.□	250 x 125 x 40	2910.4025.50.□	400 x 250 x 50	2910.6350.32.□	630 x 500 x 32	2910.8050.63.□	800 x 500 x 63
2910.2516.25.□	250 x 160 x 25	2910.4031.32.□	400 x 315 x 32	2910.6350.40.□	630 x 500 x 40	2910.8063.32.□	800 x 630 x 32
2910.2516.32.□	250 x 160 x 32	2910.4031.40.□	400 x 315 x 40	2910.6350.50.□	630 x 500 x 50	2910.8063.40.□	800 x 630 x 40
2910.2516.40.□	250 x 160 x 40	2910.4031.50.□	400 x 315 x 50	2910.6350.63.□	630 x 500 x 63	2910.8063.50.□	800 x 630 x 50
2910.2520.25.□	250 x 200 x 25	2910.4040.32.□	400 x 400 x 32	2910.6363.32.□	630 x 630 x 32	2910.8063.63.□	800 x 630 x 63

Ordering Code (example):

Aluminium plate ~ISO 6753-1		=	2910.
Length L	400 mm	=	40
Width B	400 mm	=	40.
Thickness T	40 mm	=	40.
Execution FORM	sawed	=	0
Order No		=	2910.4040.40.0

Precision flat and square bar steel, ~DIN 59350

2922.1730.

we deliver original BÖHLER quality

Material:

1.1730 / C45U
Unalloyed tool steel

Execution:

Thickness precision ground, width ground or milled, length machined

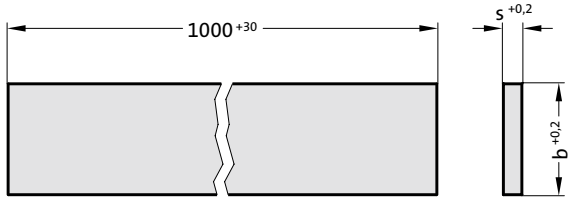

2922.1730. Precision flat and square bar steel, ~DIN 59350

s	4	5	6	8	10	12	15	16	20	25	30	32	40	50	60	63	70	80	100	120	150
b																					
10					●																
12						●															
15							●														
16								●													
20	●	●	●	●	●	●	●	●	●												
25	●	●	●	●	●	●	●	●	●	●											
30	●	●	●	●	●	●	●		●	●	●										
32	●	●	●	●	●	●		●	●	●		●									
40	●	●	●	●	●	●	●	●	●	●	●	●	●								
50	●	●	●	●	●	●	●	●	●	●	●	●	●	●							
60	●	●	●	●	●	●	●		●	●	●		●	●	●						
63	●	●	●	●	●	●		●	●	●		●	●	●		●					
70	●	●	●	●	●	●	●	●	●	●	●	●	●	●	●	●	●				
80	●	●	●	●	●	●	●	●	●	●	●	●	●	●	●	●	●	●			
90	●	●	●	●	●	●	●		●	●	●		●	●	●		●	●			
100	●	●	●	●	●	●	●	●	●	●	●	●	●	●	●	●	●	●	●		
120			●	●	●	●	●		●	●	●		●	●	●		●	●	●	●	
125	●	●	●	●	●	●	●	●	●	●	●	●	●	●	●	●	●	●	●		
140			●	●	●	●	●		●	●	●		●	●	●		●	●	●		
150	●	●	●	●	●	●	●	●	●	●	●	●	●	●	●	●	●	●	●		●
160	●	●	●	●	●	●	●	●	●	●	●	●	●	●	●	●		●	●		
175			●	●	●	●		●	●	●		●	●	●		●		●	●		
180			●	●	●	●	●		●	●	●		●	●	●		●	●	●		
200			●	●	●	●	●	●	●	●	●	●	●	●	●	●	●	●	●		
250			●	●	●	●	●	●	●	●	●	●	●	●	●	●	●	●	●		
300			●	●	●	●	●	●	●	●	●	●	●	●	●	●	●	●	●		
315			●	●	●	●		●	●	●		●	●	●		●					
350			●	●	●	●		●	●	●	●	●	●	●	●	●					
400	●	●	●	●	●	●	●	●	●	●	●	●	●	●	●	●	●	●			
450										●	●	●	●	●		●					
500										●	●	●	●	●		●					

Ordering Code (example):

Precision flat and square bar steel, ~DIN 59350		=	2922.1730.
Width B	100 mm	=	100.
Thickness S	4 mm	=	004.
Length L	1000 mm	=	1000
Order No		=	2922.1730. 100.004.1000

subject to alterations

Precision flat and square bar steel with machining allowance, DIN 59350

Material:

1.0570 / St 52-3
Non-alloyed construction steel

2923.0570.

we deliver original BÖHLER quality

Execution:

Thickness precision ground, width ground or milled, length machined

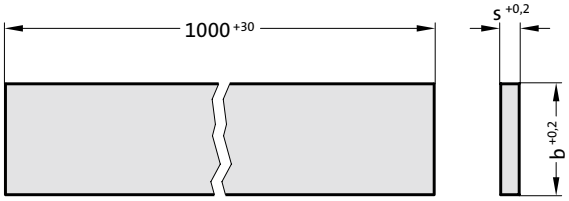

2923.0570. Precision flat and square bar steel with machining allowance, DIN 59350

s	4.2	5.2	6.2	8.2	10.4	12.4	15.4	16.4	20.4	25.4	30.4	32.4	40.4	50.4	60.4	60.6	63.4	70.4	80.4	100.4
b																				
10.4					●															
12.4						●														
15.4							●													
20.3			●	●	●	●	●													
20.4									●											
25.3	●	●	●	●	●	●	●	●	●											
25.4										●										
30.3	●	●	●	●	●	●	●		●	●										
30.4											●									
32.3								●												
32.4												●								
40.3	●	●	●	●	●	●	●		●	●	●	●								
40.4													●							
50.3	●	●	●	●	●	●	●		●	●	●	●	●							
50.4														●						
60.3	●	●	●	●	●	●	●		●	●	●		●	●						
60.4															●					
63.3				●	●	●	●	●	●	●		●	●	●						
63.4																	●			
70.3				●	●	●	●		●	●	●		●	●						
70.4																		●		
80.3	●	●	●	●	●	●	●	●	●	●	●	●	●	●	●		●	●		
80.4																			●	
100.3	●	●	●	●	●	●	●	●	●	●	●	●	●	●	●		●	●	●	
100.4																				●
120.3				●	●	●	●		●	●	●		●	●	●			●	●	●
125.3	●	●	●	●	●	●	●		●	●	●	●	●	●	●		●		●	●
140.3				●	●	●	●		●	●	●	●	●	●	●			●	●	●
150.3	●	●	●	●	●	●	●		●	●	●	●	●	●	●		●	●	●	●
160.3	●	●	●	●	●	●	●		●	●	●	●	●	●			●		●	●
180.3				●	●	●	●		●	●	●		●	●		●			●	
200.3			●	●	●	●	●	●	●	●	●	●	●	●	●		●	●	●	●
250.3			●	●	●	●	●		●	●	●	●	●	●	●		●		●	●
300.3			●	●	●	●	●		●	●	●	●	●	●	●		●	●	●	●
350.3			●	●	●	●	●		●	●	●	●	●	●			●		●	●
400.3			●	●	●	●	●		●	●		●	●	●			●			

Ordering Code (example):

Precision flat and square bar steel with machining allowance, DIN 59350			=2923.0570.
Width B	40.3 mm	=	040.
Thickness S	4.2 mm	=	004.
Length L	1000 mm	=	1000
Order No			=2923.0570. 040.004.1000

FIBRO

Precision flat and square bar steel with machining allowance, DIN 59350

2923.2099.

we deliver original BÖHLER quality

Material:

1.2099 / X5 CrS 12
Stainless steel for plastic moulding, tempered to 900-1050 N/mm²

Execution:

Thickness precision ground, width ground or milled, length machined

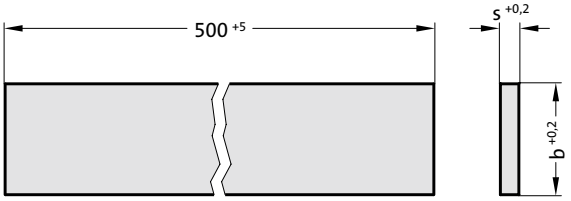

2923.2099. Precision flat and square bar steel with machining allowance, DIN 59350

s	6.2	8.2	10.4	15.4	20.4	25.4	30.4	40.4	50.4
b									
20.3	●	●	●						
25.3	●	●	●	●					
30.3	●	●	●	●	●				
40.3	●	●	●	●	●	●			
50.3	●	●	●	●	●	●	●		
60.3	●	●	●	●	●	●	●	●	
80.3	●	●	●	●	●	●	●	●	●
100.3	●	●	●	●	●	●	●	●	●
125.3	●	●	●	●	●	●	●	●	●
150.3	●	●	●	●	●	●	●	●	●
200.3	●	●	●	●	●	●	●	●	●
250.3	●	●	●	●	●	●	●	●	●
300.3	●	●	●	●	●	●	●	●	●

Ordering Code (example):

Precision flat and square bar steel with machining allowance, DIN 59350		=2923.2099.
Width B	80.3 mm=	080.
Thickness S	6.2 mm =	006.
Length L	500 mm =	0500
Order No		=2923.2099. 080.006.0500

subject to alterations

Precision flat and square bar steel with machining allowance, DIN 59350

Material:
1.2162 / 21 MnCr 5
Case hardened steel

2923.2162.

we deliver original BÖHLER quality

Execution:
Thickness precision ground, width ground or milled, length machined

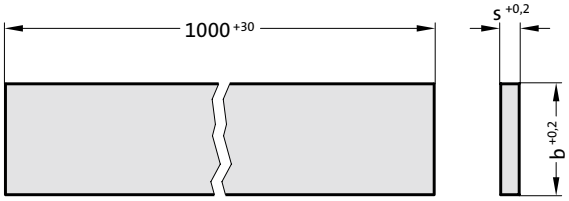

2923.2162. Precision flat and square bar steel with machining allowance, DIN 59350

s	8.2	10.4	12.4	15.4	16.4	20.4	25.4	30.4	32.4	40.4	50.4	60.4	80.4
b													
20.3	●	●	●	●	●								
20.4						●							
25.3	●	●	●	●	●	●							
25.4							●						
30.3	●	●	●	●	●	●	●						
30.4								●					
32.3	●	●	●	●	●	●	●	●					
32.4									●				
40.3	●	●	●	●	●	●	●	●					
40.4										●			
50.3	●	●	●	●	●	●	●	●		●			
50.4											●		
60.3	●	●	●	●	●	●	●	●		●	●		
60.4												●	
70.3	●	●	●	●	●	●	●	●		●	●	●	
80.3	●	●	●	●	●	●	●	●		●	●	●	
80.4													●
100.3	●	●	●	●	●	●	●	●		●	●	●	
150.3	●	●	●	●	●	●	●	●		●	●	●	
200.3	●	●	●	●	●	●	●	●		●	●	●	
250.3	●	●	●	●	●	●	●	●		●	●	●	
300.3	●	●	●	●	●	●	●	●		●	●	●	

Ordering Code (example):

Precision flat and square bar steel with machining allowance, DIN 59350		=2923.2162.	
Width B	32.3 mm	=	032.
Thickness S	8.2 mm	=	008.
Length L	1000 mm	=	1000
Order No		=2923.2162.	032.008.1000

FIBRO

Precision flat and square bar steel with machining allowance, DIN 59350

2923.2312.

we deliver original BÖHLER quality

Material:

1.2312 / 40 CrMnMoS 8-6
Steel for plastic moulding, pre-tempered to 900-1050 N/mm²

Execution:

Thickness precision ground, width ground or milled, length machined

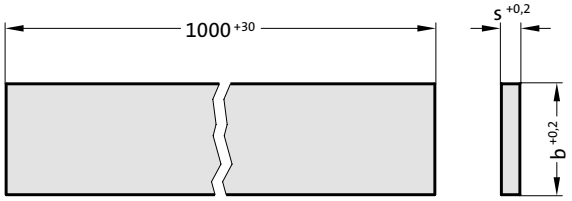

2923.2312. Precision flat and square bar steel with machining allowance, DIN 59350

s	4.2	5.2	6.2	8.2	10.4	12.4	15.4	16.4	20.4	25.4	30.4	32.4	40.4	50.4	60.4	70.4	80.4	90.4	100.4
b																			
12.4						●													
15.4							●												
16.4								●											
20.3				●	●	●	●												
20.4									●										
25.3				●	●	●	●	●	●										
25.4										●									
30.3				●	●	●	●	●	●	●									
30.4											●								
32.3				●	●	●		●	●										
32.4												●							
40.3	●	●	●	●	●	●	●	●	●	●	●								
40.4													●						
50.3	●	●	●	●	●	●	●	●	●	●	●	●	●						
50.4														●					
60.3	●	●	●	●	●	●	●	●	●	●	●	●	●	●					
60.4															●				
63.3	●	●	●	●	●	●		●	●	●		●	●	●					
70.3	●	●	●	●	●	●	●	●	●	●	●	●	●	●	●				
70.4																●			
80.3	●	●	●	●	●	●	●	●	●	●	●	●	●	●	●	●			
80.4																	●		
100.3	●	●	●	●	●	●	●	●	●	●	●	●	●	●	●	●	●		
100.4																			●
125.3				●	●	●	●	●	●	●	●	●	●	●	●	●	●		
150.3				●	●	●	●	●	●	●	●	●	●	●	●	●	●	●	
200.3				●	●	●	●	●	●	●	●	●	●	●	●	●	●	●	●
220.3					●	●		●	●	●	●	●	●	●	●	●	●	●	●
250.3					●	●	●	●	●	●	●	●	●	●	●	●			
300.3					●	●		●	●	●	●	●	●	●	●	●			

Ordering Code (example):

Precision flat and square bar steel with machining allowance, DIN 59350		=	2923.2312.
Width B	30.3 mm	=	030.
Thickness S	8.2 mm	=	008.
Length L	1000 mm	=	1000
Order No		=	2923.2312. 030.008.1000

subject to alterations

Precision flat and square bar steel with machining allowance, DIN 59350

Material:
1.2343 / X 37 CrMoV 5-1
Hot work steel

2923.2343.

we deliver original BÖHLER quality

Execution:
Thickness precision ground, width ground or milled, length machined

Note:
● = available in 500 mm and 1000 mm lengths
○ = only available in 500 mm lengths
■ = only available in 1000 mm lengths

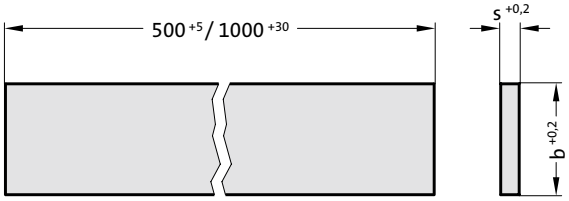

2923.2343. Precision flat and square bar steel with machining allowance, DIN 59350

s	4.2	5.2	6.2	8.2	10.4	12.4	15.4	16.4	20.4	25.4	30.4	32.4	40.4	50.4	60.4	80.4	100.4
b																	
10.3	○	○	○	○													
10.4					○												
12.4						○											
15.3	○	○	○	○	○	○											
15.4							○										
20.3	○	○	○	●	●	●	●	■									
20.4									●								
25.3	○	○	○	●	●	●	●	■	●								
25.4										●							
30.3	○	○	○	●	●	●	●		●	●							
30.4											●						
32.3				■	■	■		■	■	■							
32.4												■					
40.3	○	○	○	●	●	●	●	■	●	●	●	■					
40.4													●				
50.3	○	○	○	●	●	●	●	■	●	●	●	■	●				
50.4														●			
60.3	○	○	○	●	●	●	●		●	●	●		●	●			
60.4															●		
63.3				■	■	■		■	■	■		■	■	■			
80.3	○	○	○	●	●	●	●	■	●	●	●	■	●	●	■		
80.4																■	
100.3	○	○	○	●	●	●	●	■	●	●	●	■	●	●	■	■	
100.4																	■
125.3				■	■	■	■	■	●	●	●	■	●	●	■	■	■
150.3				■	■	■	■	■	●	●	●	■	●	●	■	■	■
200.3				■	■	■	■	■	●	●	●	■	●	●	■	■	

Ordering Code (example):

Precision flat and square bar steel with machining allowance,		
DIN 59350		=2923.2343.
Width B	15.3 mm	=015.
Thickness S	4.2 mm	=004.
Length L	500 mm	=0500
Order No		=2923.2343. 015.004.0500

FIBRO

Precision flat and square bar steel with machining allowance, DIN 59350

2923.2363.

we deliver original BÖHLER quality

Material:

1.2363 / X 100 CrMoV 5-1
Cold worked steel

Execution:

Thickness precision ground, width ground or milled, length machined

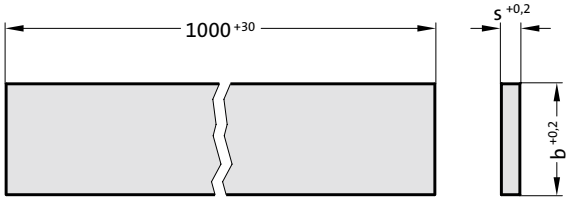

2923.2363. Precision flat and square bar steel with machining allowance, DIN 59350

s	8.2	10.4	12.4	15.4	20.4	25.4	30.4	40.4	50.4	60.4	80.4	100.4
b												
20.4					●							
25.3	●	●	●									
25.4						●						
30.3	●	●	●	●	●							
30.4							●					
40.3	●	●	●	●	●	●	●					
40.4								●				
50.3	●	●	●	●	●	●	●					
50.4									●			
60.3	●	●	●	●	●	●	●	●				
60.4										●		
80.3	●	●	●	●	●	●	●	●				
80.4											●	
100.3	●	●	●	●	●	●	●	●				
100.4												●
125.3		●	●	●	●	●	●	●				
150.3		●	●	●	●	●	●	●				
200.3		●	●	●	●	●	●	●				
250.3					●	●	●	●				

Ordering Code (example):

Precision flat and square bar steel with machining allowance, DIN 59350		=	2923.2363.
Width B	30.3 mm	=	030.
Thickness S	8.2 mm	=	008.
Length L	1000 mm	=	1000
Order No		=	2923.2363. 030.008.1000

subject to alterations

Precision flat and square bar steel with machining allowance, DIN 59350

Material:

1.2379 / X 155 CrVMo 12-1
Cold worked steel

2923.2379.

we deliver original BÖHLER quality

Execution:

Thickness precision ground, width ground or milled, length machined

Note:

● = available in 500 mm and 1000 mm lengths
○ = only available in 500 mm lengths
■ = only available in 1000 mm lengths

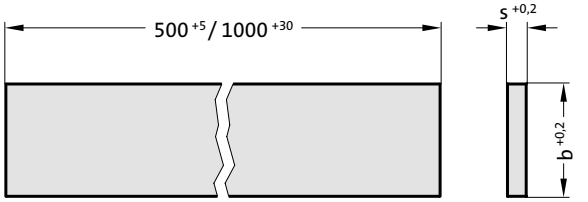

2923.2379. Precision flat and square bar steel with machining allowance, DIN 59350

s	2.2	3.2	4.2	5.2	6.2	8.2	10.4	12.4	15.4	16.4	20.4	25.4	30.4	32.4	40.4	50.4	60.4	63.4	70.4	80.4	100.4	120.4	150.4
b																							
6.2					○																		
8.2						●																	
10.3	●	●	●	●	●	●																	
10.4							●																
12.4								●															
15.3	●	●	●	●	●	●	●	●															
15.4									●														
16.4										■													
20.3	●	●	●	●	●	●	●	●	●	■													
20.4											●												
25.3	●	●	●	●	●	●	●	●	●	■	●												
25.4												●											
30.3	●	●	●	●	●	●	●	●	●	■	●	●											
30.4													●										
32.3					■	■	■	■		■	■	■											
32.4														■									
40.3	●	●	●	●	●	●	●	●	●	■	●	●	●	■									
40.4															●								
50.3	●	●	●	●	●	●	●	●	●	■	●	●	●	■	●								
50.4																●							
60.3	●	●	●	●	●	●	●	●	●		●	●	●		●	●							
60.4																	■						
63.3					■	■	■	■		■	■	■		■	■	■							
63.4																		■					
70.3	■	■	■	■	■	■	■	■	■	■	■	■	■	■	■	■	■	■					
70.4																			■				
80.3	●	●	●	●	●	●	●	●	●	■	●	●	●	■	●	●	■	■	■				
80.4																				■			
90.3							■	■	■		■	■	■		■	■	■		■				
100.3	●	●	●	●	●	●	●	●	●	■	●	●	●	■	●	●	■	■	■	■			
100.4																					■		
120.4																						■	
125.3	●	●	●	●	●	●	●	●	●	■	●	●	●	■	●	●	■	■	■	■	■		
150.3	●	●	●	●	●	●	●	●	●	■	●	●	●	■	●	●	■	■	■	■	■		
150.4																							■
160.3							■	■	■	■	■	■	■	■	■	■	■	■					
175.3								■		■	■	■	■	■	■	■		■					
200.3	●	●	●	●	●	●	●	●	●	■	●	●	●	■	●	●	■	■	■	■	■		
250.3	●	●	●	●	●	●	●	●	●	■	●	●	●	■	●	●	■						
300.3	●	●	●	●	●	●	●	●	●	■	●	●	●	■	●	●	■						
350.3										■	■	■	■	■	■								
400.3										■	■	■		■	■								

Ordering Code (example):

Precision flat and square bar steel with machining allowance, DIN 59350		=2923.2379.
Width B	20.3 mm=	020.
Thickness S	2.2 mm =	002.
Length L	500 mm =	0500
Order No		=2923.2379. 020.002.0500

Precision flat and square bar steel with machining allowance, DIN 59350

2923.2436.

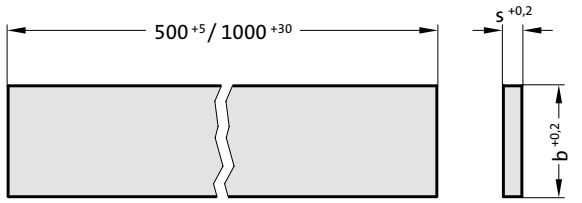

Material:

1.2436 / X 210 CrW 12
Cold worked steel

Execution:

Thickness precision ground, width ground or milled, length machined

Note:

● = available in 500 mm and 1000 mm lengths
○ = only available in 500 mm lengths
■ = only available in 1000 mm lengths

2923.2436. Precision flat and square bar steel with machining allowance, DIN 59350

s	2.2	3.2	4.2	5.2	6.2	8.2	10.4	12.4	15.4	16.4	20.4	25.4	30.4	32.4	40.4	50.4
b																
8.2						○										
10.3	●	●	●	●	●	●										
10.4							●									
12.4								●								
15.3	●	●	●	●	●	●	●	○								
15.4									○							
16.4										■						
20.3	●	●	●	●	●	●	●	●	●							
20.4											●					
25.3	●	●	●	●	●	●	●	●	●		●					
25.4												●				
30.3	●	●	●	●	●	●	●	●	●		●	●				
30.4													●			
32.3						■	■	■		■						
32.4														■		
40.3	●	●	●	●	●	●	●	●	●	■	●	●	●			
40.4															●	
50.3	●	●	●	●	●	●	●	●	●	■	●	●	●		○	
50.4																■
60.3	●	●	●	●	●	●	●	●	●		●	●	●		○	
63.3						■	■	■		■	■	■		■		
80.3	●	●	●	●	●	●	●	●	●	■	●	●	●	■	●	
100.3	●	●	●	●	●	●	●	●	●	■	●	●	●	■	●	■
125.3	○	○	○	○	○	○	●	●	●	■	●	●	●	■	●	■
150.3	○	○	○	○	○	○	●	●	●	■	●	●	●	■	●	■
160.3							■	■		■	■	■		■	■	■
175.3							■	■		■	■	■		■	■	■
200.3	○	○	○	○	○	○	●	●	●	■	●	●	●	■	●	■
250.3	○	○	○	○	○	○	●	●	●		●	●	●	■	●	■
300.3	○	○	○	○	○	○	●	●	●		●	●	●		○	
315.3														■	■	

Ordering Code (example):

Precision flat and square bar steel with machining allowance, DIN 59350		=2923.2436.
Width B	30.3 mm=	030.
Thickness S	2.2 mm =	002.
Length L	500 mm =	0500
Order No		=2923.2436. 030.002.0500

subject to alterations

Precision flat and square bar steel with machining allowance, DIN 59350

Material:
1.2767 / X 45 NiCrMo 4
Cold worked steel

2923.2767.

we deliver original BÖHLER quality

Execution:
Thickness precision ground, width ground or milled, length machined

Note:
● = available in 500 mm and 1000 mm lengths
○ = only available in 500 mm lengths
■ = only available in 1000 mm lengths

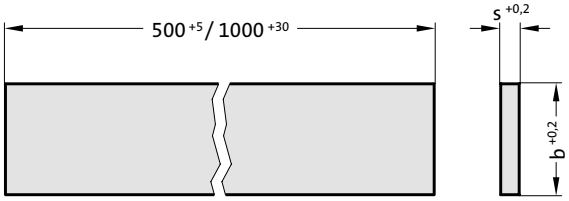

2923.2767. Precision flat and square bar steel with machining allowance, DIN 59350

s	4.2	5.2	6.2	8.2	10.4	12.4	15.4	16.4	20.4	25.4	30.4	32.4	40.4	50.4	60.4	63.4	80.4	100.4
b																		
10.3	○	○	○	○														
10.4					●													
12.4						●												
15.3	○	○	○	○	○	○												
15.4							○											
16.4								■										
20.3	○	○	○	●	●	●	●	■										
20.4									●									
25.3	○	○	○	●	●	●	●	■	●									
25.4										●								
30.3	○	○	○	●	●	●	●		●	●								
30.4											●							
32.3				■	■	■		■	■	■								
32.4												■						
40.3	○	○	○	●	●	●	●	■	●	●	●	■						
40.4													●					
50.3	○	○	○	●	●	●	●	■	●	●	●	■	●					
50.4														●				
60.3	○	○	○	●	●	●	●		●	●	●		●	●				
60.4															■			
63.3				■	■	■		■	■	■		■	■	■				
63.4																■		
70.3				■	■	■		■	■	■		■	■	■		■		
80.3	○	○	○	●	●	●	●	■	●	●	●	■	●	●	■	■		
80.4																	■	
100.3	○	○	○	●	●	●	●	■	●	●	●	■	●	●	■	■	■	
100.4																		■
125.3				●	●	●	●	■	●	●	●	■	●	●	■	■	■	■
150.3				■	■	■	■	■	■	■	■	■	■	■	■	■	■	■
200.3				■	■	■	■	■	■	■	■	■	■	■				
250.3				■	■	■		■	■	■		■	■	■		■	■	■
300.3				■	■	■		■	■	■		■	■	■		■	■	■

Ordering Code (example):

Precision flat and square bar steel with machining allowance,		
DIN 59350		=2923.2767.
Width B	20.3 mm=	020.
Thickness S	4.2 mm =	004.
Length L	500 mm =	0500
Order No		=2923.2767. 020.004.0500

FIBRO

Precision flat and square bar steel, DIN 59350

2922.2842.

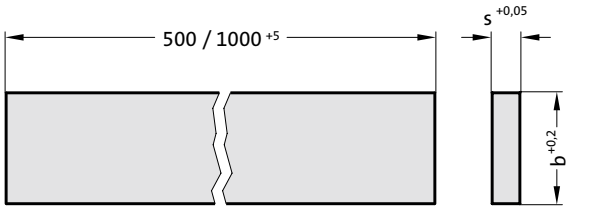

Material:

1.2842 / 90 MnCrV
Cold worked steel

Execution:

Thickness precision ground, width ground or milled, length machined

Note:

● = available in 500 mm and 1000 mm lengths
○ = only available in 500 mm lengths

2922.2842. Precision flat and square bar steel, DIN 59350

s / b	1	2	3	4	5	6	8	10	12	15	16	18	20	25	30	40	50	60
4				○														
6						●												
8							●											
10	○	●	●	●	●	●	●	●										
12	○	●	●	●	●	●	●	●	●									
15	○	●	●	●	●	●	●	●	●	●								
16											●							
18												●						
20	○	●	●	●	●	●	●	●	●	●			●					
25	○	●	●	●	●	●	●	●	●	●			●	●				
30	○	●	●	●	●	●	●	●	●	●			●	●	●			
35	○	●	●	●	●	●	●	●	●	●			●	●	●			
40	○	●	●	●	●	●	●	●	●	●			●	●	●	●		
50	○	●	●	●	●	●	●	●	●	●			●	●	●	●	●	
60	○	●	●	●	●	●	●	●	●	●			●	●	●	●	●	●
70	○	●	●	●	●	●	●	●	●	●			●	●	●	●	●	
80	○	●	●	●	●	●	●	●	●	●			●	●	●	●	●	
100	○	●	●	●	●	●	●	●	●	●			●	●	●	●	●	
120	○	●	●	●	●	●	●	●	●	●			●	●	●	●	●	
125	○	●	●	●	●	●	●	●	●	●			●	●	●	●	●	
150	○	●	●	●	●	●	●	●	●	●			●	●	●	●	●	
160	○	●	●	●	●	●	●	●	●	●			●	●	●	●	●	
180	○	●	●	●	●	●	●	●	●	●			●	●	●	●	●	
200	○	●	●	●	●	●	●	●	●	●			●	●	●	●	●	
250	○	●	●	●	●	●	●	●	●	●			●	●	●	●	●	
300	○	●	●	●	●	●	●	●	●	●			●	●	●	●	●	

Ordering Code (example):

Precision flat and square bar steel, DIN 59350		=	2922.2842.
Width B	50 mm	=	050.
Thickness S	1 mm	=	001.
Length L	500 mm	=	0500
Order No		=	2922.2842. 050.001.0500

subject to alterations

Precision flat and square bar steel with machining allowance, DIN 59350

Material:
1.2842 / 90 MnCrV
Cold worked steel

2923.2842.

we deliver original BÖHLER quality

Execution:
Thickness precision ground, width ground or milled, length machined

Note:
● = available in 500 mm and 1000 mm lengths

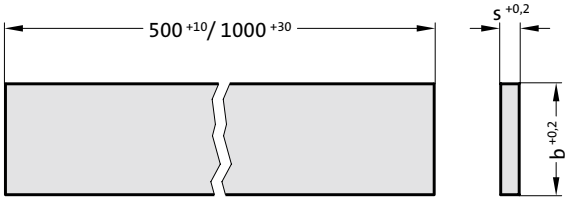

2923.2842. Precision flat and square bar steel with machining allowance, DIN 59350

s	2.2	3.2	4.2	5.2	6.2	8.2	10.4	12.4	15.4	16.4	20.4	25.4	30.4	32.4	40.4	50.4	60.4	63.4	80.4	100.4
b																				
10.3	●	●	●	●	●	●														
10.4							●													
12.4								●												
15.3	●	●	●	●	●	●	●	●												
16.4										●										
20.3	●	●	●	●	●	●	●	●	●	●										
20.4											●									
25.3	●	●	●	●	●	●	●	●	●	●	●									
25.4												●								
30.3	●	●	●	●	●	●	●	●	●	●	●	●								
30.4													●							
32.3	●	●	●	●	●	●	●	●	●	●	●	●	●							
32.4														●						
40.3	●	●	●	●	●	●	●	●	●	●	●	●	●	●						
40.4															●					
50.3	●	●	●	●	●	●	●	●	●	●	●	●	●	●	●					
50.4																●				
60.3	●	●	●	●	●	●	●	●	●	●	●	●	●	●	●	●				
60.4																	●			
63.3	●	●	●	●	●	●	●	●	●	●	●	●	●	●	●	●				
63.4																		●		
70.3	●	●	●	●	●	●	●	●	●	●	●	●	●	●	●	●		●		
80.3	●	●	●	●	●	●	●	●	●	●	●	●	●	●	●	●		●		
80.4																			●	
100.3	●	●	●	●	●	●	●	●	●	●	●	●	●	●	●	●		●	●	
100.4																				●
120.3	●	●	●	●	●	●	●	●	●	●	●	●	●	●	●	●		●	●	●
125.3	●	●	●	●	●	●	●	●	●	●	●	●	●	●	●	●		●	●	●
150.3	●	●	●	●	●	●	●	●	●	●	●	●	●	●	●	●		●	●	●
160.3	●	●	●	●	●	●	●	●	●	●	●	●	●	●	●	●		●	●	●
180.3	●	●	●	●	●	●	●	●	●	●	●	●	●	●	●	●		●	●	●
200.3	●	●	●	●	●	●	●	●	●	●	●	●	●	●	●	●		●	●	●
250.3						●	●	●	●	●	●	●	●	●	●	●		●	●	●
300.3						●	●	●	●	●	●	●	●							

Ordering Code (example):

Precision flat and square bar steel with machining allowance,			
DIN 59350		=2923.2842.	
Width B	30.3 mm=	030.	
Thickness S	2.2 mm =	002.	
Length L	500 mm =	0500	
Order No		=2923.2842. 030.002.0500	

Precision feeler gauge
Foil shim



Typical Applications:

- ☐ Tolerance measurement of internal and external dimensions.
- ☐ Adjustment of tooling devices and machine parts.
- ☐ Testing valve and cylinder clearances.

Material:

C-Steel, Material-No.: 1.1274
Stainless steel, Material-No.: 1.4310

2925. Precision feeler gauge, Foil shim

	Precision feeler gauge Contents per can/spool						Foil shims Contents: foil shims per pack			Technical specifications tensile strength N/mm		
	5 m	10 m	5 m	5 m	5 m	5 m	10	5	5			
Width mm ▶	12,7	12,7	6	25	50	100	Format 50×300 mm	Format 100×500 mm	Format 150×500 mm	Tolerance ± mm	for carbon steel	for stainless steel
Thickness mm ▼												
0,005	▲	▲	–	–	–	▲	–	▲	–	0,001	– –	>1500
0,01	▲	▲	–	▲	▲	▲	▲	▲	–	0,002	– –	>1500
0,02	◆	◆	–	▲	▲	▲	▲	▲	–	0,002	2000–2200	>1500
0,03	◆	◆	–	◆	◆	▲	◆	▲	–	0,002	2000–2200	1500–1700
0,04	◆	◆	–	◆	◆	▲	◆	▲	–	0,003	2000–2200	1500–1700
0,05	◆	◆	◆	◆	◆	▲	◆	▲	▲	0,003	2000–2200	1500–1700
0,06	◆	◆	–	◆	◆	▲	◆	▲	–	0,003	2000–2200	1500–1700
0,07	◆	◆	–	◆	◆	▲	◆	▲	–	0,004	2000–2200	1500–1700
0,08	◆	◆	◆	◆	◆	▲	◆	▲	–	0,004	2000–2200	1500–1700
0,09	◆	◆	–	◆	◆	▲	◆	▲	–	0,004	2000–2200	1500–1700
0,10	◆	◆	◆	◆	◆	▲	◆	▲	▲	0,004	2000–2200	1500–1700
0,12	◆	◆	–	–	◆	▲	◆	▲	–	0,004	2000–2200	1500–1700
0,15	◆	◆	◆	◆	◆	▲	◆	▲	▲	0,005	2000–2200	1500–1700
0,20	◆	◆	◆	◆	◆	▲	◆	▲	▲	0,006	1800–2100	1500–1700
0,25	◆	◆	◆	◆	◆	▲	◆	▲	▲	0,007	1800–2100	1500–1700
0,30	◆	◆	◆	◆	◆	▲	◆	▲	▲	0,007	1800–2100	1500–1700
0,35	◆	◆	–	–	◆	▲	◆	▲	–	0,008	1800–2000	1500–1700
0,40	◆	◆	◆	◆	◆	▲	◆	▲	▲	0,009	1600–1900	1500–1700
0,45	◆	◆	–	–	◆	▲	◆	▲	–	0,009	1600–1900	1500–1700
0,50	◆	◆	◆	◆	◆	▲	◆	▲	▲	0,010	1600–1900	1500–1700
0,55	◆	◆	–	–	–	▲	–	▲	–	0,010	1600–1900	1500–1700
0,60	◆	◆	–	◆	◆	▲	◆	▲	–	0,010	1600–1900	1500–1700
0,70	◆	◆	–	◆	◆	▲	◆	▲	–	0,012	1600–1900	1500–1700
0,80	◆	◆	–	◆	◆	▲	◆	▲	–	0,013	1600–1800	1500–1700
0,90	◆	◆	–	◆	◆	▲	◆	▲	–	0,013	1600–1800	1500–1700
1,00	◆	◆	–	◆	◆	▲	◆	▲	–	0,013	1600–1800	1500–1700

Order No. Part II = Material

◆ C-Steel, Material-No.: 1.1274 is 1

▲ Stainless steel, Material-No.: 1.4310 is 2

Ordering code (example):

Precision feeler gauge	=	2925.
Material-No.: 1.1274	=	1.
Thickness 0,07 mm	=	0070.
Width 12,7 mm	=	0012.
Length 10 m	=	10000
Order No	=	2925.1.0070.0012.10000

Ordering code (example):

Foil shim	=	2925.
Material-No.: 1.4310	=	2.
Thickness 0,02 mm	=	0020.
Width 50 mm	=	050.
Length 300 mm	=	300
Order No	=	2925.2.0020.050.300

subject to alterations

A Die Sets

B Precision Ground Plates and Flat Bars

C Lifting and Clamping Devices

Shanks, lifter studs, eyebolts
Clamping claws, screws and bolts

D Guide elements

E Ground Precision Components

F Springs

G Elastomer-Bars, -Sheets, -Sections

H FIBRO Chemical Tooling Aids

J Peripheral Equipment

K Cam Units

L Standard Parts for Mould Making



Lifting and Clamping Devices

FIBRO

Contents



211.11. C8

Die set shank, straight



211.12. C8

Threaded die set shank
DIN ISO 10242-1

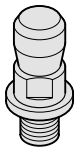

211.13. C9

Die set shank with collar

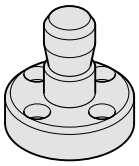

211.14. C9

Bolt-on die set shank,
~DIN ISO 10242-2

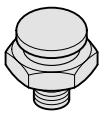

212.11. C10

Coupling spigot with thread

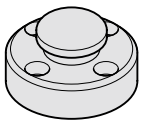

212.15. C10

Die set coupling spigot

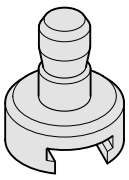

212.16. C11

Spigot holder

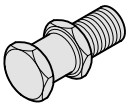

213.12. C11

Screw-in lifter stud VDI 3366

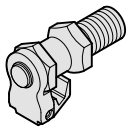

2130.03. C12

Screw-in lifter stud with cable securing device

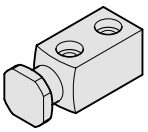

2130.11. C13

Lifter stud VDI 3366

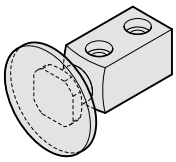

2130.12. C13

Lifter stud with cable securing device, with welded disc

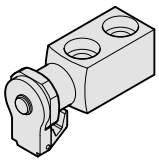

2130.13. C14

Lifter stud with cable securing device

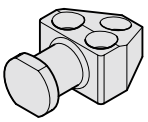

213.13. C15

Lifter stud

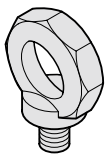

2131.10. C16

Lifting eye bolt, high tensile

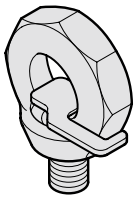

2131.11. C17

Lifting eye bolt, rotatable

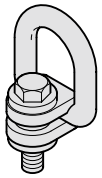

2131.15. C18

Hoisting snap link, omnidirectional

Contents



2131.20. C19

Rotary safety eyebolt, light duty, with ball bearing



2131.21. C20

Rotary safety eyebolt, heavy duty, with ball bearing

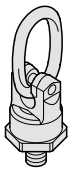

2131.25. C21

Universal rotary safety eyebolt with oval ring

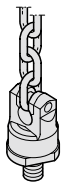

2131.26. C22

Universal rotary safety eyebolt for chain

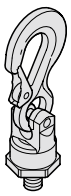

2131.23. C23

Universal rotary safety eyebolt with eye hook

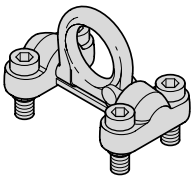

2131.22. C24

Ring block with position lock

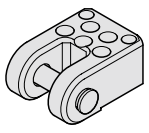

2133.11. C25

Lifting flange with bolt with safety ring, to BMW

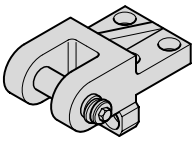

2133.12. C26-27

Lifting flange with bolt with safety ring

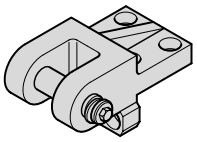

2133.13. C28

Lifting flange with bolt with safety ring, with feather key, to CNOMO Standard

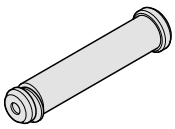

2132.10. C29

Die lifting bolt with safety ring, VDI 3366

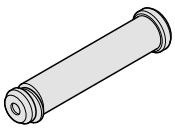

2132.10.55. C30

Die lifting bolt with safety ring and spring, to VW standard

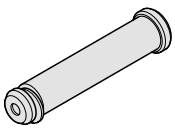

2132.11. C31

Die lifting bolt with safety ring, CNOMO Standard

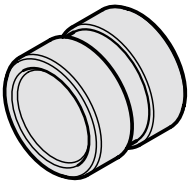

2132.10.03. .1 C32

Bush for die lifting bolt

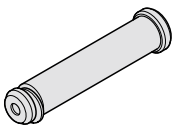

2133.12. .1 C33

Die lifting bolt with safety ring, for lifting flange 2133.12.

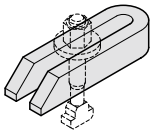

2140.17. C34

Clamp, forked shape, DIN 6315-B

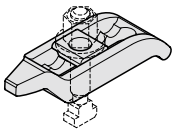

2140.15. C34

Clamping claw, goose-neck shape

FIBRO

Contents

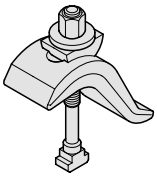

2140.13. C35

Clamping claw, infinitely variable

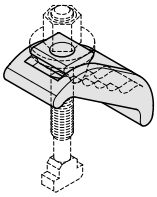

2140.14. C35

Clamping claw, infinitely variable

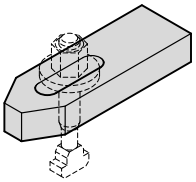

2140.16. C36

Clamp, straight, DIN 6314

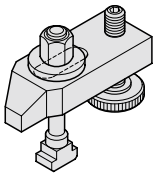

2140.10. C36

Clamp, straight, with setscrew

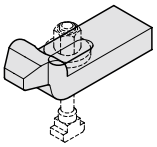

2140.18. C37

Clamp, goose neck shape, DIN 6316

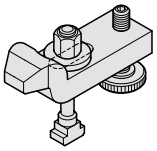

2140.11. C37

Clamp, goose neck shape, with setscrew

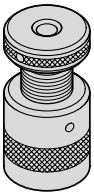

2140.20. C38

Support, adjustable

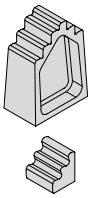

2140.19. C38

Stepped Block DIN 6318

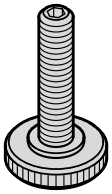

2140.02. C39

Set screw



2140.32. C39

Hexagon Nut DIN 6330 B

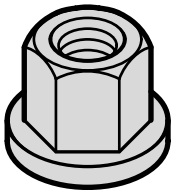

2140.33. C40

Hexagon nut with collar, DIN 6331

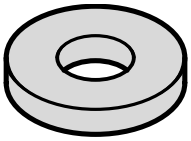

2140.34. C40

Washer DIN 6340

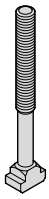

2140.30. C41

Screw for T-slot, DIN 787

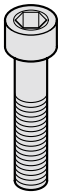

2192.10. C42

Hexagon socket head cap screw, DIN EN ISO 4762 - Strength class 8.8

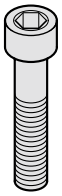

2192.12. C43

Hexagon socket head cap screw, DIN EN ISO 4762 - Strength class 12.9

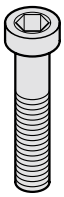

2192.20. C44

Hexagon socket head cap screw, with low profile head and key guide, DIN 6912 - Strength class 8.8

Contents

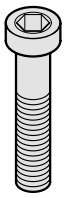

2192.40. C45

Socket head cap screw, with low profile head, DIN 7984 - Strength class 8.8

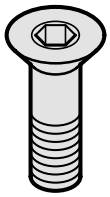

2192.30. C46

Hexagon socket countersunk head cap screw, ISO 10642 - Strength class 8.8

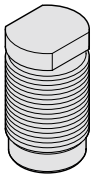

2192.90. C47

Screw plug



2192.61. C48

Flat mushroom head screw with hexagon socket



2140.01.01. C50

Clamping tool set



2140.01.02. C51

Clamping tool set

Die set shank, straight
Threaded die set shank DIN ISO 10242-1



211.11.

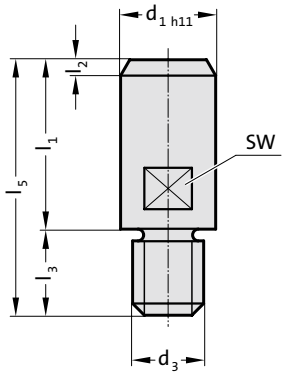

211.11. Die set shank, straight

Order No	d_1	d_3	l_1	l_2	l_3	l_5	SW*
211.11.20.016	20	M16X1,5	40	3	18	58	17
211.11.25.016	25	M16X1,5	45	4	23	68	21
211.11.25.020	25	M20x1,5	45	4	23	68	21
211.11.32.020	32	M20x1,5	56	4	23	79	27
211.11.32.024	32	M24x1,5	56	4	23	79	27
211.11.40.024	40	M24x1,5	70	5	23	93	36
211.11.40.030	40	M30x2	70	5	23	93	36
211.11.50.030	50	M30x2	80	6	28	108	41
211.11.65.042	65	M42x3	100	8	28	128	55

*SW = width across flats



211.12.

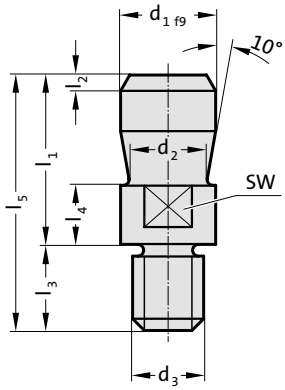

211.12. Threaded die set shank DIN ISO 10242-1

Order No	d_1	d_2	d_3	l_1	l_2	l_3	l_4	l_5	SW*
211.12.20.016	20	15	M16x1,5	40	2	18	12	58	17
211.12.25.016	25	20	M16x1,5	45	2.5	23	16	68	21
211.12.25.020	25	20	M20x1,5	45	2.5	23	16	68	21
211.12.32.020	32	25	M20x1,5	56	3	23	16	79	27
211.12.32.024	32	25	M24x1,5	56	3	23	16	79	27
211.12.40.024	40	32	M24x1,5	70	4	23	26	93	36
211.12.40.027	40	32	M27x2	70	4	23	26	93	36
211.12.40.030	40	32	M30x2	70	4	23	26	93	36
211.12.50.030	50	42	M30x2	80	5	28	26	108	41
211.12.65.042	65	53	M42x3	100	8	28	26	128	55

*SW = width across flats

subject to alterations

Die set shank with collar
Bolt-on die set shank, ~DIN ISO 10242-2

211.13.

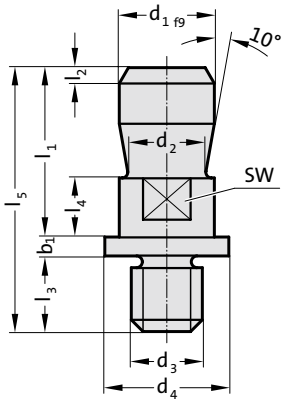



211.13. Die set shank with collar

Order No	d_1	d_2	d_3	d_4	l_1	l_2	l_3	l_4	l_5	b_1	SW*
211.13.20.016	20	15	M16x1,5	28	40	2	16	12	61	5	17
211.13.25.016	25	20	M16x1,5	34	45	2.5	16	16	66	5	21
211.13.25.020	25	20	M20x1,5	34	45	2.5	20	16	70	5	21
211.13.32.020	32	25	M20x1,5	42	56	3	20	16	82	5	27
211.13.32.024	32	25	M24x1,5	42	56	3	24	16	86	5	27
211.13.40.024	40	32	M24x1,5	52	70	4	24	26	102	5	36
211.13.40.030	40	32	M30x2	52	70	4	30	26	108	5	36
211.13.50.030	50	42	M30x2	62	80	5	30	26	118	5	41

*SW = width across flats

211.14.

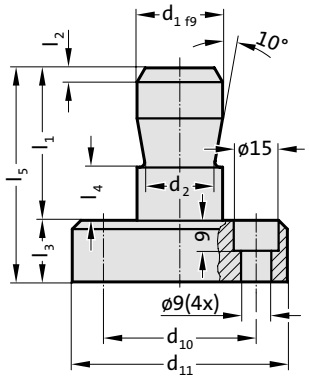



211.14. Bolt-on die set shank, ~DIN ISO 10242-2

Order No	d_1	d_2	d_{10}	d_{11}	l_1	l_2	l_3	l_4	l_5
211.14.20.063	20	15	45	63	40	2	18	12	58
211.14.25.063	25	20	45	63	45	2.5	18	16	63
211.14.25.080	25	20	63	80	45	2.5	18	16	63
211.14.32.097	32	25	80	97	56	3	23	16	79
211.14.32.122	32	25	105	122	56	3	23	16	79
211.14.40.097	40	32	80	97	70	4	23	26	93
211.14.40.122	40	32	105	122	70	4	23	26	93

Coupling spigot with thread
Die set coupling spigot

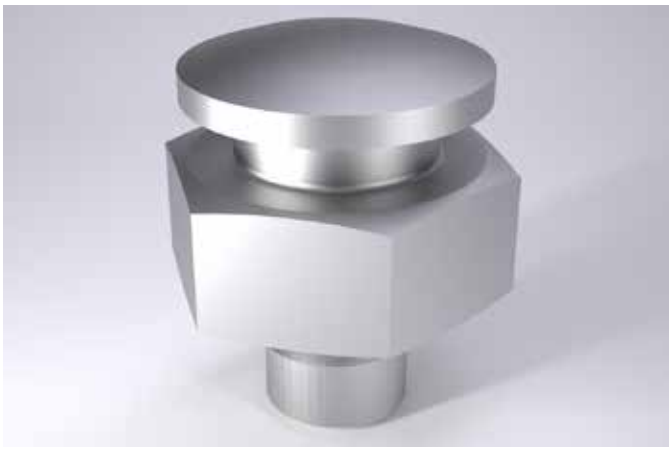

212.11.

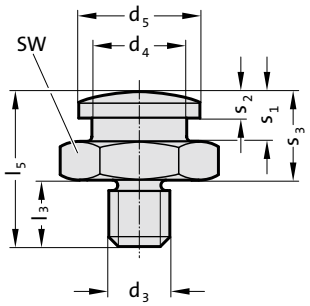

212.11. Coupling spigot with thread

Order No	d_3	d_4	d_5	l_3	l_5	s_1	s_2	s_3	SW*
212.11.016	M16x1,5	25	32	18	41	13	6.5	23	36
212.11.020	M20x1,5	32	48	23	64	19	9.5	41	50
212.11.024	M24x1,5	32	48	23	64	19	9.5	41	50
212.11.030	M30x2	32	48	23	66	19	9.5	43	60

*SW = width across flats



212.15.

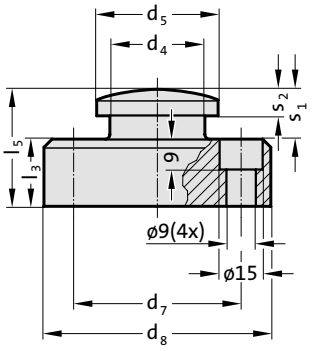

212.15. Die set coupling spigot

Order No	d_4	d_5	d_7	d_8	l_3	l_5	s_1	s_2
212.15.063	25	32	46	63	18	31	13	6.5
212.15.080	32	48	63	80	18	37	19	9.5
212.15.097	32	48	80	97	23	42	19	9.5
212.15.122	32	48	105	122	23	42	19	9.5

subject to alterations

Spigot holder
Screw-in lifter stud VDI 3366

212.16.

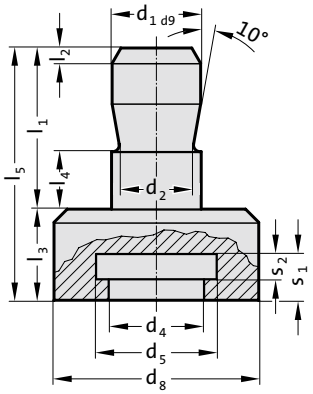



212.16. Spigot holder

	Work area										
Order No	d_1	d_2	d_4	d_5	d_8	l_1	l_2	l_3	l_4	s_1	s_2
212.16.025	25	20	26	33	56	45	4	25	16	12.6	7
212.16.032	32	25	33	49	80	56	4	30	16	18.6	10
212.16.040	40	32	33	49	80	70	5	30	26	18.6	10

213.12. VDI 3366

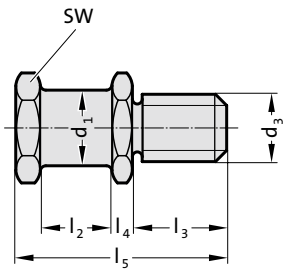



213.12. Screw-in lifter stud VDI 3366

Order No	d_1	d_3	l_2	l_3	l_4	l_5	SW*	Lifting capacity [kg]
213.12.016	16	M16	20	28	5	58	24	320
213.12.020	20	M20	22	34	6	68	30	500
213.12.024	25	M24	25	38	8	78	36	1000
213.12.030	32	M30	32	45	10	95	41	1500
213.12.036	40	M36	40	56	12	118	50	2500

*SW = Width across flats

Screw-in lifter stud with cable securing device



2130.03.

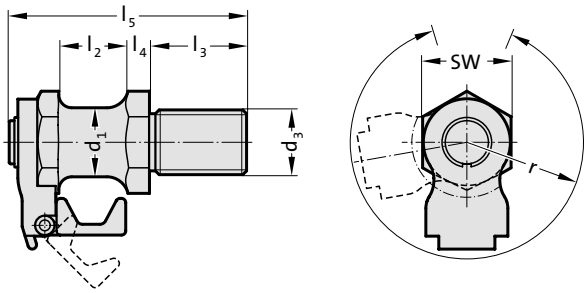

Note:

For opening the cable safety device, use key 2130.00.03.01 (to be ordered separately).

2130.03. Screw-in lifter stud with cable securing device

Order No	d_1	d_3	l_2	l_3	l_4	l_5	SW*	r	Lifting capacity [kg]
2130.03.020	20	M20	22	34	6.5	8.5	30	38	500
2130.03.024	25	M24	25	38	8	9	36	42	1000
2130.03.030	32	M30	32	45	10	10	41	50	1500
2130.03.036	40	M36	40	56	12	11	50	57	2500

*SW = Width across flats

Lifter stud VDI 3366
Lifter stud with cable securing device, with welded disc

2130.11.

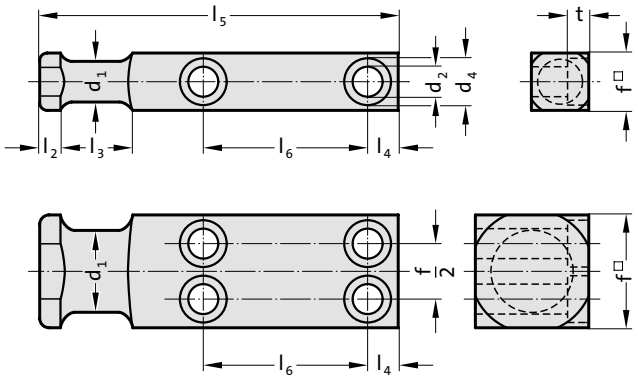



2130.11. Lifter stud VDI 3366

Order No	d_1	d_2	d_4	f	l_2	l_3	l_4	l_5	l_6	t	Number of screw holes	Lifting capacity [kg]
2130.11.020	16	9	15	20	6	20	10	80	34	9	2	320
2130.11.025	20	11	18	25	8	25	10	90	37	11	2	630
2130.11.035	25	13.5	20	35	8	30	12	100	38	13	2	1250
2130.11.040	32	17.5	26	40	10	32	16	120	46	17.5	2	2000
2130.11.050	40	22	33	50	10	40	18	140	54	21.5	2	3200
2130.11.060	50	26	40	60	12	45	22	160	59	25.5	2	5000
2130.11.080	63	22	33	80	12	50	20	200	78	21.5	4	8000
2130.11.100	80	26	40	100	15	65	25	250	100	25.5	4	12500
2130.11.120	100	33	48	120	15	80	30	300	125	32	4	20000

2130.12.

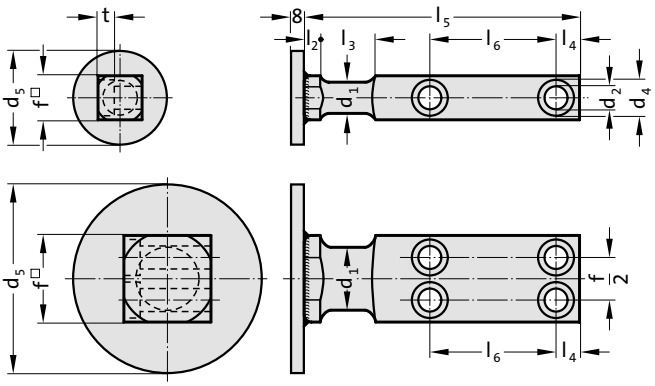



2130.12. Lifter stud with cable securing device, with welded disc

Order No	d_1	d_2	d_4	d_5*	f	l_2	l_3	l_4	l_5	l_6	t	Number of screw holes	Lifting capacity [kg]
2130.12.020	16	9	15	60	20	6	20	10	80	34	9	2	320
2130.12.025	20	11	18	70	25	8	25	10	90	37	11	2	630
2130.12.035	25	13.5	20	70	35	8	30	12	100	38	13	2	1250
2130.12.040	32	17.5	26	110	40	10	32	16	120	46	17.5	2	2000
2130.12.050	40	22	33	110	50	10	40	18	140	54	21.5	2	3200
2130.12.060	50	26	40	150	60	12	45	22	160	59	25.5	2	5000
2130.12.080	63	22	33	150	80	12	50	20	200	78	21.5	4	8000
2130.12.100	80	26	40	150	100	15	65	25	250	100	25.5	4	12500
2130.12.120	100	33	48	150	120	15	80	30	300	125	32	4	20000

*Pulley for cable securing device welded on

Lifter stud with cable securing device



2130.13.

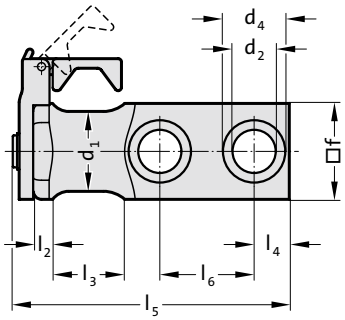

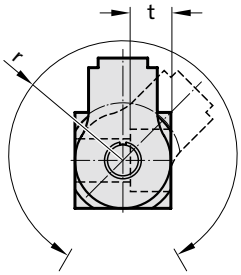

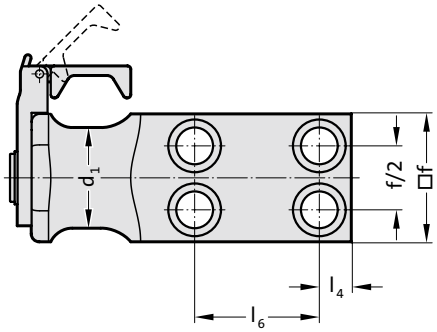

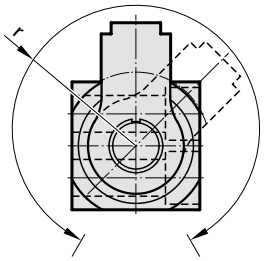

Note:

For opening the cable safety device, use key 2130.00.03.01 (to be ordered separately).

2130.13. Lifter stud with cable securing device

Order No	d_1	d_2	d_4	f	l_2	l_3	l_4	l_5	l_6	r	t	Number of screw holes	Lifting capacity [kg]
2130.13.025	20	11	18	25	8	25	10	99	37	38	11	2	630
2130.13.035	25	13.5	20	35	8	30	12	112.5	38	42	13	2	1250
2130.13.040	32	17.5	26	40	10	32	16	132.5	46	52	17.5	2	2000
2130.13.050	40	22	33	50	10	40	18	152.5	54	60	21.5	2	3200
2130.13.060	50	26	40	60	12	45	22	173	59	66	25.5	2	5000
2130.13.080	63	22	33	80	15	50	20	213.5	78	80	21.5	4	8000

Lifter stud

213.13.

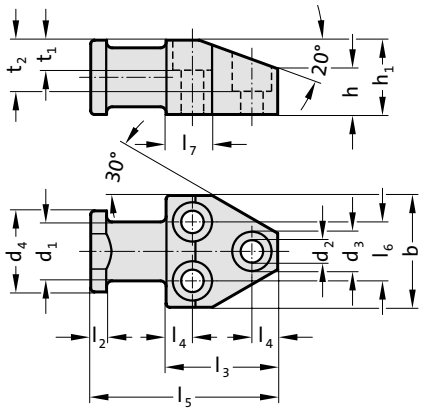



213.13. Lifter stud

Order No	b	d_1	d_2	d_3	d_4	h	h_1	l_2	l_3	l_4	l_5	l_6	l_7	t_1	t_2	Lifting capacity [kg]
213.13.060	60	32	13.5	20	44	24	40	8	60	14	100	32	24	15	29	2000
213.13.080	80	40	17.5	26	60	32	50	10	70	16	120	44	26	20	35.5	3500
213.13.100	100	50	22	33	70	40	65	12	88	20	145	56	30	25	46.5	6000

FIBRO

Lifting eye bolt, high tensile



2131.10.

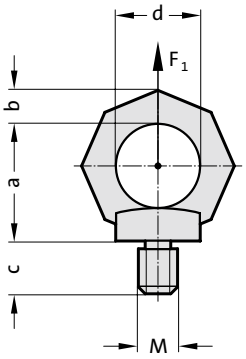

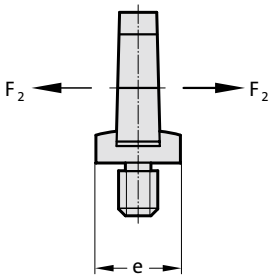

Description:

During use check that the eyebolt is firmly seated.
Rotation during the lifting operation must be avoided.
It will not rotate automatically to the correct load angle.
Not approved for mining applications.

Material:

1.6541, heavy duty heat treated.
100% electromagnetically crack tested, to EN 1677-1, safety factor 4:1.

Note:

Ensure that the bolting surface is flat. Thread must be screwed in completely.
Format: = octagonal, Grade 8.
Identification: clear indication of permissible load for F_2 category critical loads (not permissible for DIN 580).

2131.10. Lifting eye bolt, high tensile

Order No	a	b	c	d	M	e
2131.10.006	35	11	12	25	M6	25
2131.10.008	35	11	12	25	M8	25
2131.10.010	35	11	15	25	M10	25
2131.10.012	41	13	18	30	M12	30
2131.10.014	48	15	21	35	M14	35
2131.10.016	48	15	24	35	M16	35
2131.10.020	55	17	30	40	M20	40
2131.10.024	70	21	36	50	M24	50
2131.10.030	85	26	45	60	M30	60
2131.10.036	130	43	54	90	M36	100
2131.10.042	130	43	63	90	M42	100
2131.10.048	130	43	67	90	M48	100

Max. carried load “G” in tonnes for various types of attachment

Type of attachment, Arrangement of the suspension points								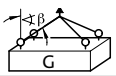		
Number of lines	1	1	2	2	2 symmetrical		2	3 and 4 symmetrical		3 and 4
Angle of inclination/ load direction	0°	90°	0°	90°	0–45°	45–60°	asymme-trical	0–45°	45–60°	asymmetri-cal
Order No	carried load in tonnes									
2131.10.006	0,4		0,8							
2131.10.008	0,8		1,6							
2131.10.010	1		2							
2131.10.012	1,6		3,2							
2131.10.014	3		6							
2131.10.016	4		8							
2131.10.020	6		12							
2131.10.024	8		16							
2131.10.030	12		24							
2131.10.036	16		32							
2131.10.042	24		48							
2131.10.048	32		64							

We recommend that you use the eyebolt 2131.11. that is adjustable in the direction of force for the type of suspension with no details of carried loads!

subject to alterations

Lifting eye bolt, rotatable

2131.11.

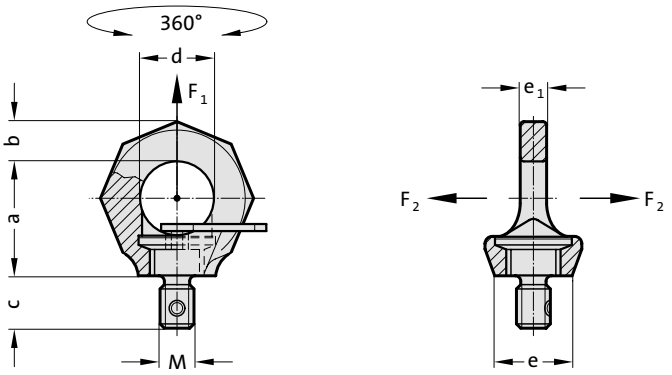



Description:

During use check that the hexagon socket screw is firmly seated. Can be set for the direction of application so that there is no accidental turning and flipping over. Captive hexagon socket screw. No tools are required as the hexagon socket screw is supplied with a hardened star profile key. The star profile key engages in the hexagon socket. It can be screwed and unscrewed by hand.
Make sure that the ring is free to rotate through 360° when the unit is screwed in.

Material:

1.6541, forged, heavy duty heat treated.
100% electromagnetically crack tested, to EN 1677-4, safety factor 4:1.

Note:

Ensure that the bolting surface is flat. Thread must be screwed in completely.
Format: stellate – clearly distinguishable to DIN 580 eye bolt
Identification: clear indication of permissible load for the loading capacity in the plane of the ring.

2131.11. Lifting eye bolt, rotatable

Order No	a	b	c	d	e	e_1	M
2131.11.008	34	11	12	25	25	11.7	M8
2131.11.010	34	11	15	25	25	12.1	M10
2131.11.012	42	13	18	30	30	14.9	M12
2131.11.016	49	15	24	35	35	17.3	M16
2131.11.020	57	17	30	40	40	20.5	M20
2131.11.024	69	21	36	48	48	25.4	M24
2131.11.030	86	26	45	60	60	30.1	M30
2131.11.036	103	32	54	72	75	37.6	M36
2131.11.042	120	38	63	82	85	43.7	M42
2131.11.048	137	43	72	94	100	48.1	M48

Max. carried load “G” in tonnes for various types of attachment

Type of attachment, Arrangement of the suspension points								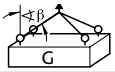		
Number of lines	1	1	2	2	2 symmetrical		2	3 and 4 symmetrical		3 and 4
Angle of inclination/ load direction	0°	90°	0°	90°	0–45°	45–60°	asymmetrical	0–45°	45–60°	asymmetrical
Order No	carried load in tonnes									
2131.11.008	1	0,4	2	0,8	0,56	0,4	0,4	0,84	0,6	0,4
2131.11.010	1	0,4	2	0,8	0,56	0,4	0,4	0,84	0,6	0,4
2131.11.012	2	0,75	4	1,5	1	0,75	0,75	1,6	1,12	0,75
2131.11.016	4	1,5	8	3	2,1	1,5	1,5	3,15	2,25	1,5
2131.11.020	6	2,3	12	4,6	3,22	2,3	2,3	4,83	3,45	2,3
2131.11.024	8	3,2	16	6,4	4,48	3,2	3,2	6,7	4,8	3,2
2131.11.030	12	4,5	24	9	6,3	4,5	4,5	9,4	6,7	4,5
2131.11.036	16	7	32	14	9,8	7	7	14,7	10,5	7
2131.11.042	24	9	48	18	12,6	9	9	18,9	13,5	9
2131.11.048	32	12	64	24	16,8	12	12	25,2	18	12

Hoisting snap link, omnidirectional



2131.15.

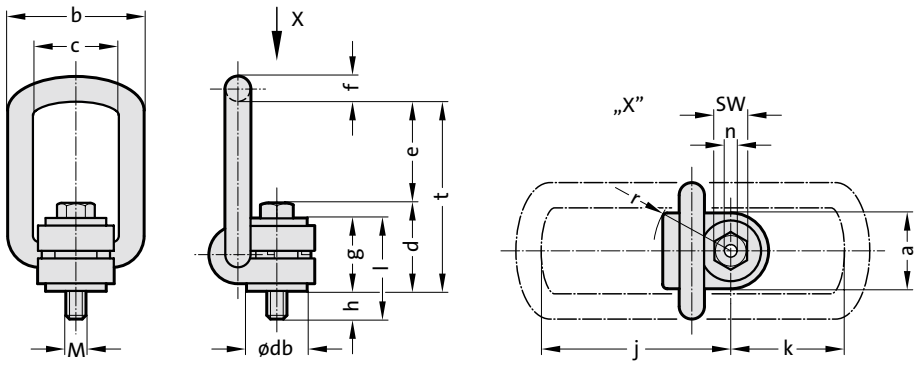

Description:

The hinged unit is free to rotate through 360°, self-align with the direction of pull and folding. The hoisting Snap Link must be installed in the stress direction before loading, must be able to move freely and may not be supported at an angle.
Do not rotate under load.
Full load bearing capacity in any direction.
Complete with a 100% crack-checked outer and inner hexagonal bolt for universal tool use.

Note:

Ensure that the bolting surface is flat. Thread must be screwed in completely.

2131.15. Hoisting snap link, omnidirectional

Order No	a	b max.	c	d	e	f	g	h Standard	j	k	l Standard	M	n	SW*	R	t	db	Thightening torque [Nm]
2131.15.008.036	30	54	34	35	40	10	29	11	75	45	40	M8	5	13	32	75	24	30
2131.15.010.036	30	54	34	36	39	10	29	16	75	45	45	M10	6	17	32	75	24	60
2131.15.012.036	32	54	34	37	38	10	29	21	75	45	50	M12	8	19	32	75	26	100
2131.15.016.036	33	56	36	46	39	13.5	36	24	86	47	60	M16	10	24	38	85	30	150
2131.15.020.050	50	82	54	55	55	16.5	43	32	113	64	75	M20	12	30	48	110	45	250
2131.15.024.050	50	82	54	58	67	18	43	37	130	78	80	M24	14	36	48	125	45	400
2131.15.027.065	60	103	65	78	69	22.5	61	39	151	80	100	M27	0	41	67	147	60	400
2131.15.030.065	60	103	65	80	67	22.5	61	49	151	80	110	M30	17	46	67	147	60	500
2131.15.036.065	60	103	65	72	74	22.5	55	52	151	80	107	M36	0	55	67	146	60	700
2131.15.036.080	77	122	82	100	97	26.5	77	63	205	110	140	M36	22	55	87	197	70	800
2131.15.042.080	77	122	82	103	94	26.5	77	73	205	110	150	M42	24	65	87	197	70	1000
2131.15.042.100	95	156	100	113	109	36	87	63	230	130	150	M42	24	65	100	222	85	1500
2131.15.048.100	95	156	100	117	105	36	87	73	230	130	160	M48	27	75	100	222	85	2000

*SW = Width across flats

Max. carried load "G" in tonnes for various types of attachment

Type of attachment, Arrangement of the suspension points		G	G	G	G	G	G	G	G	G	G
Number of lines		1	1	2	2	2 symmetrical		2	3 and 4 symmetrical		3 and 4
Angle of inclination/ load direction		0°	90°	0°	90°	0–45°	45–60°	asymmetrical	0–45°	45–60°	asymmetrical
Order No	Thread	carried load in tonnes									
2131.15.008.036	M 8	0,3	0,3	0,6	0,6	0,42	0,3	0,3	0,63	0,45	0,3
2131.15.010.036	M10	0,63	0,63	1,26	1,26	0,88	0,63	0,63	1,32	0,95	0,63
2131.15.012.036	M12	1,0	1,0	2,0	2,0	1,4	1,0	1,0	2,1	1,5	1,0
2131.15.016.036	M16	1,5	1,5	3,0	3,0	2,1	1,5	1,5	3,15	2,25	1,5
2131.15.020.050	M20	2,5	2,5	5,0	5,0	3,5	2,5	2,5	5,25	3,75	2,5
2131.15.024.050	M24	4,0	4,0	8,0	8,0	5,6	4,0	4,0	8,4	6,0	4,0
2131.15.027.065	M27	4,0	4,0	8,0	8,0	5,6	4,0	4,0	8,4	6,0	4,0
2131.15.030.065	M30	5,0	5,0	10,0	10,0	7,0	5,0	5,0	10,5	7,5	5,0
2131.15.036.065	M36	7,0	7,0	14,0	14,0	9,8	7,0	7,0	14,7	10,5	7,0
2131.15.036.080	M36	8,0	8,0	16,0	16,0	11,2	8,0	8,0	16,8	12,0	8,0
2131.15.042.080	M42	10,0	10,0	20,0	20,0	14,0	10,0	10,0	21,0	15,0	10,0
2131.15.042.100	M42	15,0	15,0	30,0	30,0	21,0	15,0	15,0	31,5	22,5	15,0
2131.15.048.100	M48	20,0	20,0	40,0	40,0	28,0	20,0	20,0	42,0	30,0	20,0

subject to alterations

Rotary safety eyebolt, light duty, with ball bearing

2131.20.

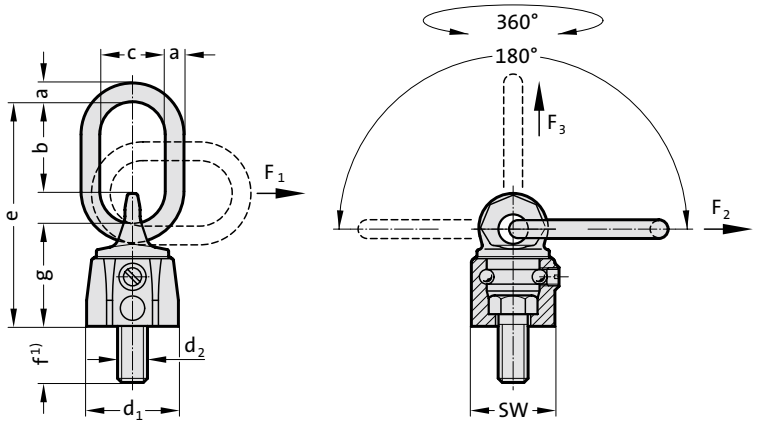



Description:

For loads that are turned and rotated.
Mounted on ball-bearings – can be rotated through 360° under load (F_3).
Cannot be rotated under full load at 90° to the threaded fixing (F_1, F_2).
Not suitable for extended rotational movement when fully loaded.
Can be loaded on all sides with a safety factor 4:1.
High-strength suspension eye conforming to EN 1677-4
1) Other thread lengths available upon request.

Note:

Ensure that the bolting surface is flat. Thread must be screwed in completely.
The threaded connection on the transported load must be suitable for transferring forces.

2131.20. Rotary safety eyebolt, light duty, with ball bearing

Order No	Rated carrying capacity for F_1 [t]	a	b	c	d_1	d_2	e	f	g	SW*
2131.20.008.013	0.3	8	33	29	30	8	76	13	36	28
2131.20.010.017	0.45	8	33	29	36	10	78	17	38	30

*SW = Width across flats

Max. carried load “G” in tonnes for various types of attachment

Type of attachment, Arrangement of the suspension points		F_3 G	$F_1(F_2)$ G	G	G	G	G	G	G	G
Number of lines		1	1	2	2	2 symmetrical		2	3 and 4 symmetrical		3 and 4
Angle of inclination/ load direction		0°	90°	0°	90°	0–45°	45–60°	asymmetrical	0–45°	45–60°	asymmetrical
Order No	Thread	carried load in tonnes									
2131.20.008.013	M 8	0,6	0,3 (0,4)	1,2	0,6 (0,8)	0,42 (0,56)	0,3 (0,4)	0,3 (0,4)	0,63 (0,84)	0,45 (0,6)	0,3 (0,4)
2131.20.010.017	M10	0,9	0,45 (0,6)	1,8	0,9 (1,2)	0,63 (0,84)	0,45 (0,6)	0,45 (0,6)	0,95 (1,26)	0,68 (0,9)	0,45 (0,6)

Rotary safety eyebolt, heavy duty, with ball bearing



2131.21.

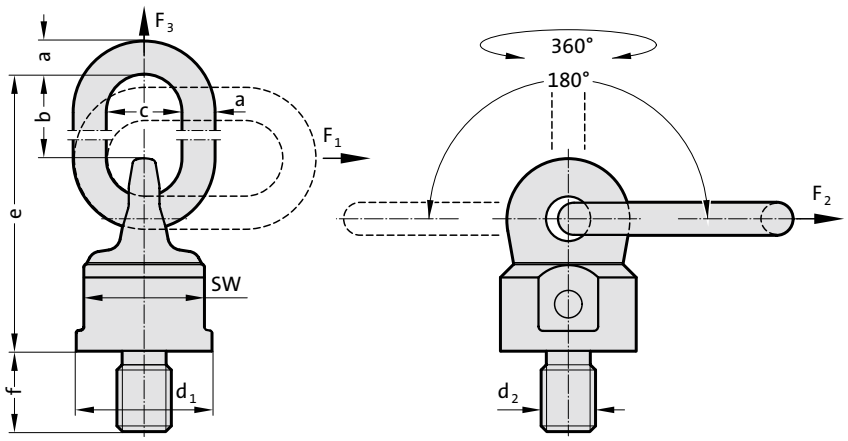

Description:

For loads that are turned and rotated.
Mounted on ball-bearings – can be rotated through 360° under load (F_3).
Cannot be rotated under full load at 90° to the threaded fixing (F_1, F_2).
Not suitable for extended rotational movement when fully loaded.
Can be loaded on all sides with a safety factor 4:1.

Note:

Ensure that the bolting surface is flat. Thread must be screwed in completely.
The threaded connection on the transported load must be suitable for transferring forces.

2131.21. Rotary safety eyebolt, heavy duty, with ball bearing

Order No	Rated carrying capacity for F_1 [t]	a	b	c	d_1	d_2	e	f	SW*
2131.21.036	8	22	87	50	90	36	210	54	80
2131.21.042	10	26	112	65	98	42	240	63	85
2131.21.045	10	26	112	65	98	45	240	67	85
2131.21.048	10	26	112	65	98	48	240	68	85
2131.21.056	15	32	120	70	120	56	280	84	95
2131.21.064	15	32	120	70	120	64	280	95	95
2131.21.090	35	40	125	80	170	90	332	135	130

*SW = Width across flats

Max. carried load “G” in tonnes for various types of attachment

Type of attachment, Arrangement of the suspension points		F_3 G	$F_1(F_2)$ G	G	G	G	G	G	G	G	G
Number of lines		1	1	2	2	2 symmetrical		2	3 and 4 symmetrical		3 and 4
Angle of inclination/ load direction		0°	90°	0°	90°	0–45°	45–60°	asymmetrical	0–45°	45–60°	asymmetrical
Order No	Thread	carried load in tonnes									
2131.21.036	M36	12,5	8 (10)	25	16 (20)	11,2 (14)	8 (10)	8 (10)	16,8 (21)	12 (15)	8 (10)
2131.21.042	M42	16	10 (12,5)	32	20 (25)	14 (17,5)	10 (12,5)	10 (12,5)	21 (26,2)	15 (18,8)	10 (12,5)
2131.21.045	[M45]	16	10 (12,5)	32	20 (25)	14 (17,5)	10 (12,5)	10 (12,5)	21 (26,2)	15 (18,8)	10 (12,5)
2131.21.048	M48	16	10 (12,5)	32	20 (25)	14 (17,5)	10 (12,5)	10 (12,5)	21 (26,2)	15 (18,8)	10 (12,5)
2131.21.056	M56	25	15 (18)	50	30 (36)	21 (25,2)	15 (18)	15 (18)	31,5 (38)	22,5 (27)	15 (18)
2131.21.064	M64	25	15 (18)	50	30 (36)	21 (25,2)	15 (18)	15 (18)	31,5 (38)	22,5 (27)	15 (18)
2131.21.090	M90	35	35 (40)	70	70 (80)	49 (56)	35 (40)	35 (40)	73,5 (84)	52,5 (60)	35 (40)

subject to alterations

Universal rotary safety eyebolt with oval ring

2131.25.

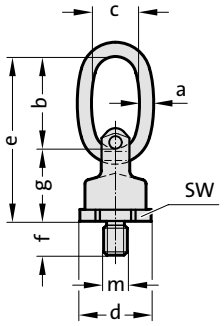



Description:

The unviversal rotary safety eyebolts with oval ring with double ball bearing for smooth non-jerking action tipping, rotating and turning.
Also rotates 90° in direction of screwing in with full load.
Not suitable for extended rotational movement when fully loaded.
The special design avoids damage to lifting elements and the valuable load when turning.
For ring hoists, slings, cables, hooks etc.

Note:

Ensure that the bolting surface is flat. Thread must be screwed in completely.

2131.25. Universal rotary safety eyebolt with oval ring

Order No	Rated carrying capacity [t]	a	b	c	d	e	f	g	m	SW*
2131.25.012	0.63	9	65	35	40	105	18	41	M12	36
2131.25.016	1.5	11	65	35	46	115	24	50	M16	41
2131.25.020	2.5	13	75	40	61	135	30	61	M20	55
2131.25.024	4.0	16	95	45	78	172	36	77	M24	70
2131.25.030	5.0	21	130	60	95	223	45	93	M30	85
2131.25.036	8.0	24	140	65	100	242	54	102	M36	90

*SW = Width across flats

Max. carried load “G” in tonnes for various types of attachment

Type of attachment, Arrangement of the suspension points								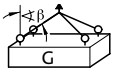			
Number of lines	1	1	2	2	2 symmetrical		2	3 and 4 symmetrical		3 and 4	
Angle of inclination/ load direction	0°	90°	0°	90°	0–45°	45–60°	asymme-trical	0–45°	45–60°	asymmetri-cal	
Order No	carried load in tonnes										
2131.25.012	0,63	0,63	1,26	1,26	0,88	0,63	0,63	1,32	0,95	0,63	
2131.25.016	1,5	1,5	3,0	3,0	2,1	1,5	1,5	3,15	2,25	1,5	
2131.25.020	2,5	2,5	5,0	5,0	3,5	2,5	2,5	5,25	3,75	2,5	
2131.25.024	4,0	4,0	8,0	8,0	5,6	4,0	4,0	8,4	6,0	4,0	
2131.25.030	6,5	5,0	13,0	10,0	7	5	5	10,5	7,5	5,0	
2131.25.036	10,0	8,0	20,0	16,0	11,2	8,0	8,0	16,8	12,0	8,0	

Universal rotary safety eyebolt for chain



2131.26.

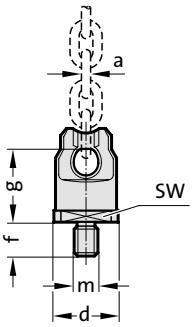

Description:

The unviversal rotary safety eyebolts for chains with double ball bearing for smooth non-jerking action tipping, rotating and turning.
Also rotates 90° in direction of screwing in with full load.
Not suitable for extended rotational movement when fully loaded.
The special design avoids damage to lifting elements and the valuable load when turning.
For ring hoists, slings, cables, hooks etc.

Note:

Ensure that the bolting surface is flat. Thread must be screwed in completely.
Use only Grade 10 chains.
Supplied without chain.

2131.26. Universal rotary safety eyebolt for chain

Order No	Rated carrying capacity [t]	a Chain connection	d	f	g	m	SW*
2131.26.012	0.63	4	40	18	41	M12	36
2131.26.016	1.5	6	46	24	50	M16	41
2131.26.020	2.5	8	61	30	61	M20	55
2131.26.024	4.0	10	78	36	77	M24	70
2131.26.030	5.0	13	95	45	93	M30	85
2131.26.036	8.0	16	100	54	102	M36	90

*SW = Width across flats

Max. carried load “G” in tonnes for various types of attachment

Type of attachment, Arrangement of the suspension points								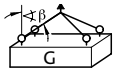		
Number of lines	1	1	2	2	2 symmetrical		2	3 and 4 symmetrical		3 and 4
Angle of inclination/ load direction	0°	90°	0°	90°	0–45°	45–60°	asymme-trical	0–45°	45–60°	asymmetri-cal
Order No	carried load in tonnes									
2131.26.012	0,63	0,63	1,26	1,26	0,88	0,63	0,63	1,32	0,95	0,63
2131.26.016	1,5	1,5	3,0	3,0	2,1	1,5	1,5	3,15	2,25	1,5
2131.26.020	2,5	2,5	5,0	5,0	3,5	2,5	2,5	5,25	3,75	2,5
2131.26.024	4,0	4,0	8,0	8,0	5,6	4,0	4,0	8,4	6,0	4,0
2131.26.030	6,5	5,0	13,0	10,0	7	5	5	10,5	7,5	5,0
2131.26.036	10,0	8,0	20,0	16,0	11,2	8,0	8,0	16,8	12,0	8,0

subject to alterations

Universal rotary safety eyebolt with eye hook

2131.23.

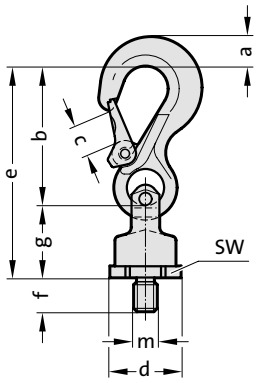



Description:

The unviversal rotary safety eyebolts with eye hooks with double ball bearing for smooth non-jerking action tipping, rotating and turning.
Also rotates 90° in direction of screwing in with full load.
Not suitable for extended rotational movement when fully loaded.
The special design avoids damage to lifting elements and the valuable load when turning.
For ring hoists, slings, cables, hooks etc.

Note:

Ensure that the bolting surface is flat. Thread must be screwed in completely.

2131.23. Universal rotary safety eyebolt with eye hook

Order No	Rated carrying capacity [t]	a	b	c	d	e	f	g	m	SW*
2131.23.012	0,63	13	75	18	40	116	18	41	M12	36
2131.23.016	1,5	20	97	25	46	147	24	50	M16	41
2131.23.020	2.5	28	126	30	61	187	30	61	M20	55
2131.23.024	4.0	36	150	35	78	227	36	77	M24	70
2131.23.030	5.0	37	174	40	95	267	45	93	M30	85
2131.23.036	8.0	49	208	48	100	310	54	102	M36	90

*SW = Width across flats

Max. carried load “G” in tonnes for various types of attachment

Type of attachment, Arrangement of the suspension points								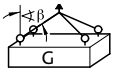		
Number of lines	1	1	2	2	2 symmetrical		2	3 and 4 symmetrical		3 and 4
Angle of inclination/ load direction	0°	90°	0°	90°	0–45°	45–60°	asymmetrical	0–45°	45–60°	asymmetrical
Order No	carried load in tonnes									
2131.23.012	0,63	0,63	1,26	1,26	0,88	0,63	0,63	1,32	0,95	0,63
2131.23.016	1,5	1,5	3,0	3,0	2,1	1,5	1,5	3,15	2,25	1,5
2131.23.020	2,5	2,5	5,0	5,0	3,5	2,5	2,5	5,25	3,75	2,5
2131.23.024	4,0	4,0	8,0	8,0	5,6	4,0	4,0	8,4	6,0	4,0
2131.23.030	6,5	5,0	13,0	10,0	7	5,0	5,0	10,5	7,5	5,0
2131.23.036	10,0	8,0	20,0	16,0	11,2	8,0	8,0	16,8	12,0	8,0

Ring block with position lock



2131.22.016

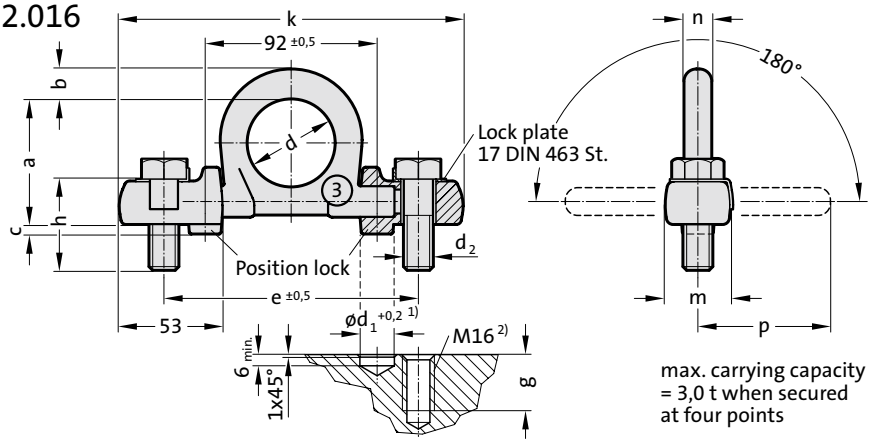



2131.22.

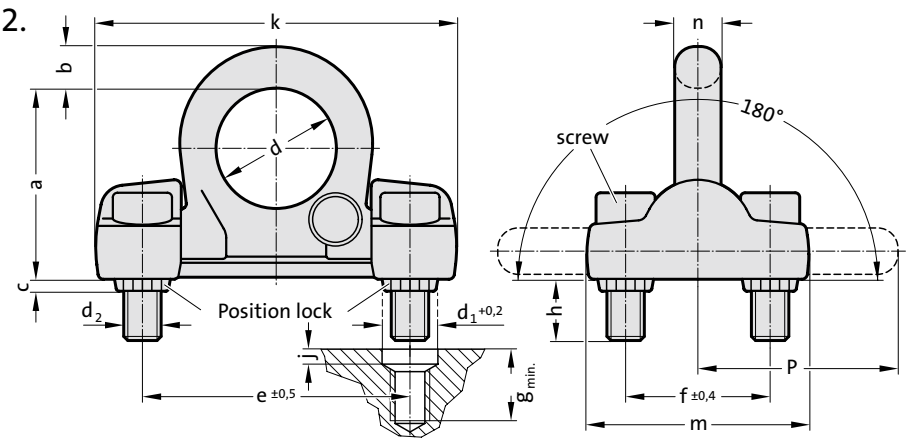

Description:

The position locks protect the fixing bolts against bending and shear stresses. The ring can be folded down.

Note:

1) Drill the holes for the position locks first.
2) Fix the ring block in the position lock and then tap the holes.
Ensure that the bolting surface is flat.
See also loading of eyebolts.
The threaded connection on the transported load must be suitable for transferring forces.

Fixing:

Only use 100% crack tested bolts.
Once bolts have been in use for some time, check that they are firmly seated.
Minimum grade of screws, see table: "Y"

2131.22.016.: Only use hexagonal bolts to ISO 4014. Fit washers before tightening and securing bolts (tightening torque 120 Nm).

2131.22.020./030.: Use only hexagon socket head screws conforming to ISO 4762 (2131.22.020 tightening torque 300 Nm, 2131.22.030 tightening torque 600 Nm).

2131.22. Ring block with position lock

Order No	Rated carrying capacity [t]	a	b	c	d	d_1	d_2	e	f	g	h	j	k	m	n	y	p
2131.22.016	3	67	16	5	48	18	M16	136	-	30	50	-	178	34	16	10.9	71
2131.22.020	10	102	22	6	65	30	M20	143	78	50	45	8	213	120	25	12.9	100
2131.22.030	16	131	30	8	90	46	M30	198	104	70	63	10	270	170	32	12.9	134

Max. carried load “G” in tonnes for various types of attachment

Type of attachment, Arrangement of the suspension points		F_3 G	$F_1(F_2)$ G	G	G	G	G	G	G	G	G
Number of lines		1	1	2	2	2 symmetrical		2	3 and 4 symmetrical		3 and 4
Angle of inclination/ load direction		0°	90°	0°	90°	0–45°	45–60°	asymm.	0–45°	45–60°	asymm.
Order No	Thread	carried load in tonnes									
2131.22.016	2 × M16	3	3	6	6	4,2	3	3	6,3	4,5	3
2131.22.020	4 × M20	10	10	20	20	14	10	10	21	15	10
2131.22.030	4 × M30	16	16	32	32	22,4	16	16	33,6	24	16

subject to alterations

Lifting eye bolt, high tensile

2131.30.

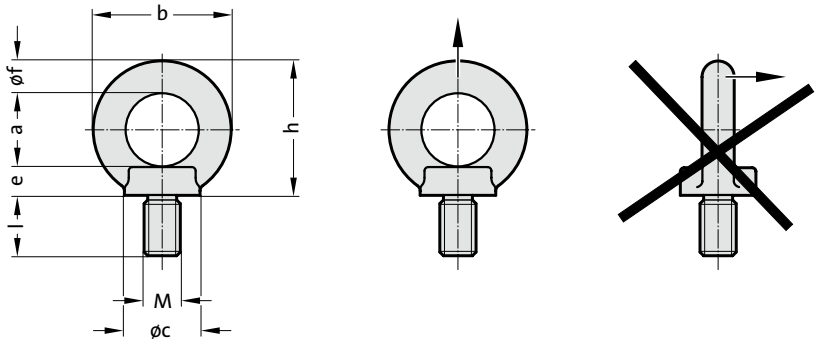



Description:

Only tighten eyebolts hand-tight. Not suitable for diagonal pull. Avoid turning movements during transport.

Material:

Alloyed steel, hardened and tempered, quality class 8

Note:

Load capacity according to operating instructions or load capacity table in the specified directions of pull.

When selecting the arrangement, make sure that unequal loading does not occur, e.g. if:
- no free adjustment is possible in the direction of pull
- direction of pull does not lie in the specified range

Safety factory 4

2131.30. Lifting eye bolt, high tensile

Order No	Rated carrying capacity [t]	M	l	a	b	c	e	f	h
2131.30.006	0.4	M6	13	25	45	25	10	10	45
2131.30.008	0.8	M8	13	25	45	25	10	10	45
2131.30.010	1	M10	17	25	45	25	10	10	45
2131.30.012	1.6	M12	21	35	63	35	14	14	62
2131.30.014	3	M14	21	35	63	35	14	14	62
2131.30.016	4	M16	27	35	63	35	14	14	62
2131.30.020	6	M20	30	50	90	50	20	20	90
2131.30.024	8	M24	36	50	90	50	20	20	90
2131.30.030	12	M30	45	60	108	65	24	24	109
2131.30.036	16	M36	54	70	126	75	26	28	128
2131.30.042	24	M42	63	80	144	85	30	32	147
2131.30.048	32	M48	68	90	166	100	35	38	168

Max. carrying capacity “G” in tonnes for various types of attachment

Type of attachment							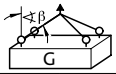			
Number of lines	1	1	2	2	2	2	3+4	3+4	2	3+4
Angle of inclination/ load direction	0°	90°	0°	90°	0–45°	45–60°	0–45°	45–60°	asym-metrical	asym-metrical
Order No	carrying capacity in tonnes									
2131.30.006	0.4		0.8							
2131.30.008	0.8		1.6							
2131.30.010	1		2							
2131.30.012	1.6		3.2							
2131.30.014	3		6							
2131.30.016	4		8							
2131.30.020	6		12							
2131.30.024	8		16							
2131.30.030	12		24							
2131.30.036	16		32							
2131.30.042	24		48							
2131.30.048	32		64							

Load the eyebolt in the pull direction only! For these lifting types, use the turnable eyebolt 2131.31. or the turnable attachment point 2131.34

Attachment point screwable profilift gamma



2131.31.

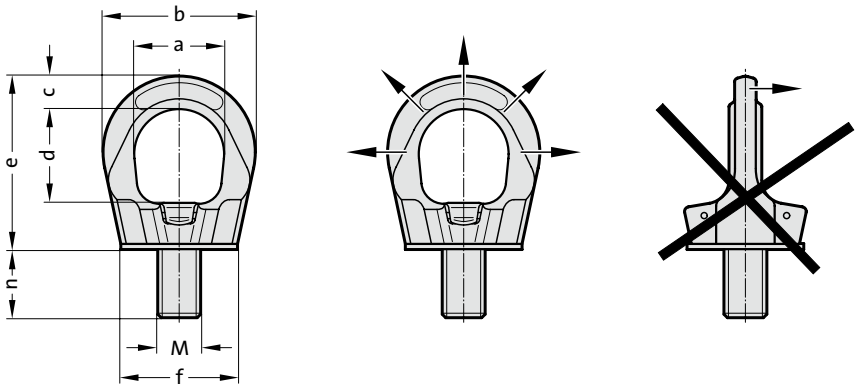

Description:

When replacing, make sure the Allen screw is seated firmly. Adjustable in the direction of force, thus no unintended opening up and overtwisting! Screwing in and out by hand possible. The ring must be able to be turned 360° in the screwed tight state.

Material:

Structural parts: High-strength chrome nickle alloyed Q & T steel.
Screws: High-strength screws strength class 10.9, 100 % crack tested

Note:

Ensure even screw-in surface, threads must be screwed in completely.
Each attachment point is provided with an individual serial number
Information about installation and removal, see operating instructions.
Load capacity according to operating instructions or load capacity table in the specified directions of pull.
Set attachment point in permitted loading direction before loading.

When selecting the arrangement, make sure that unequal loading does not occur, e.g. if:
- no free adjustment is possible in the direction of pull
- direction of pull does not lie in the specified range
Safety factor 4

Other lengths (n) on request!

2131.31. Attachment point screwable profilift gamma

Order No	Rated carrying capacity [t]	M	a	b	c	d	e	f	n
2131.31.008	0.3	M8	25	45	10	27	53	35	15
2131.31.010	0.5	M10	25	45	10	27	53	35	15
2131.31.012	0.7	M12	30	55	12	32	63	43	20
2131.31.016	1.5	M16	35	64	14	36	70	50	25
2131.31.020	2.3	M20	40	69	16	41	78	54	30
2131.31.024	3.2	M24	50	86	18	50	93	69	35
2131.31.030	4.9	M30	60	110	25	60	114	90	45
2131.31.036	7	M36	70	132	31	70	136	108	55
2131.31.042	9	M42	80	152	36	72	153	126	65
2131.31.048	12	M48	95	179	42	88	179	148	75

Max. carrying capacity “G” in tonnes for various types of attachment

Type of attachment		G	G	G	G	G		G		G	G
Number of lines		1	1	2	2	2	2	3+4	3+4	2	3+4
Angle of inclination/ load direction		0°	90°	0°	90°	0–45°	45–60°	0–45°	45–60°	asymmetrical	asymmetrical
Order No	tightening torque [Nm]	carrying capacity in tonnes									
2131.31.008	simply tighten hand-tight	1	0.3	2	0.6	0.4	0.3	0.6	0.4	0.3	0.3
2131.31.010		1.5	0.5	3	1	0.7	0.5	1	0.7	0.5	0.5
2131.31.012		2	0.7	4	1.4	1	0.7	1.4	1	0.7	0.7
2131.31.016		4	1.5	8	3	2.1	1.5	3	2.2	1.5	1.5
2131.31.020		5	2.3	10	4.6	3.2	2.3	4.8	3.4	2.3	2.3
2131.31.024		6.5	3.2	13	6.4	4.5	3.2	6.7	4.8	3.2	3.2
2131.31.030		12	4.9	24	9.8	6.9	4.9	10.3	7.3	4.9	4.9
2131.31.036		15	7	30	14	9.8	7	14.7	10.5	7	7
2131.31.042		22	9	44	18	12.6	9	18.9	13.5	9	9
2131.31.048		30	12	60	24	16.8	12	25	18	12	12

Attachment point screwable profilift gamma ring nut

2131.32.

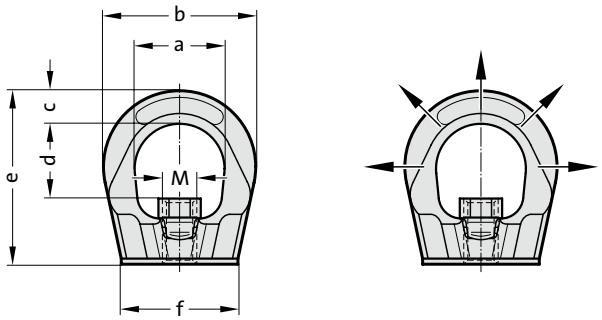



Description:

Pay attention to firm seating of the ring nut when inserting. Adjustable in the direction of force, thus no unintended opening up and overtwisting! Screwing in and out by hand possible. The ring must be able to be turned 360° in the screwed tight state.

Material:

Structural parts: High-strength chrome nickle alloyed Q & T steel.
Nuts: High-strength nuts, strength class 10, 100 % crack tested

Note:

Ensure even screw-in surface, threads must be screwed in completely.
Each attachment point is provided with an individual serial number
Information about installation and removal, see operating instructions.
Load capacity according to operating instructions or load capacity table in the specified directions of pull.
Set attachment point in permitted loading direction before loading.

When selecting the arrangement, make sure that unequal loading does not occur, e.g. if:
- no free adjustment is possible in the direction of pull
- direction of pull does not lie in the specified range

Safety factor 4.

2131.32. Attachment point screwable profilift gamma ring nut

Order No	Rated carrying capacity [t]	M	a	b	c	d	e	f
2131.32.008	0.3	M8	25	45	10	21	55	35
2131.32.010	0.5	M10	25	45	10	21	55	35
2131.32.012	0.7	M12	30	55	12	25	65	43
2131.32.016	1.5	M16	35	64	14	29	72	50
2131.32.020	2.3	M20	40	69	16	34	80	54
2131.32.024	3.5	M24	50	86	18	40	95	69
2131.32.030	4.9	M30	60	110	25	47	115	90

Max. carrying capacity “G” in tonnes for various types of attachment

Type of attachment					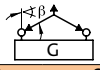		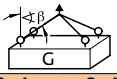			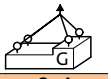
Number of lines	1	1	2	2	2	2	3+4	3+4	2	3+4
Angle of inclination/ load direction	0°	90°	0°	90°	0–45°	45–60°	0–45°	45–60°	asymmetrical	asymmetrical
Order No	carrying capacity in tonnes									
2131.32.008	1	0.3	2	0.6	0.4	0.3	0.6	0.4	0.3	0.3
2131.32.010	1.5	0.5	3	1	0.7	0.5	1	0.7	0.5	0.5
2131.32.012	2	0.7	4	1.4	1	0.7	1.4	1	0.7	0.7
2131.32.016	4	1.5	8	3	2.1	1.5	3	2.2	1.5	1.5
2131.32.020	4.5	2.3	9	4.6	3.2	2.3	4.8	3.4	2.3	2.3
2131.32.024	5	3.5	10	7	4.9	3.5	7.4	5.2	3.5	3.5
2131.32.030	12	4.9	24	1.4	6.9	4.9	10.3	7.3	4.9	4.9

Hoisting snap link, omnidirectional



2131.33.

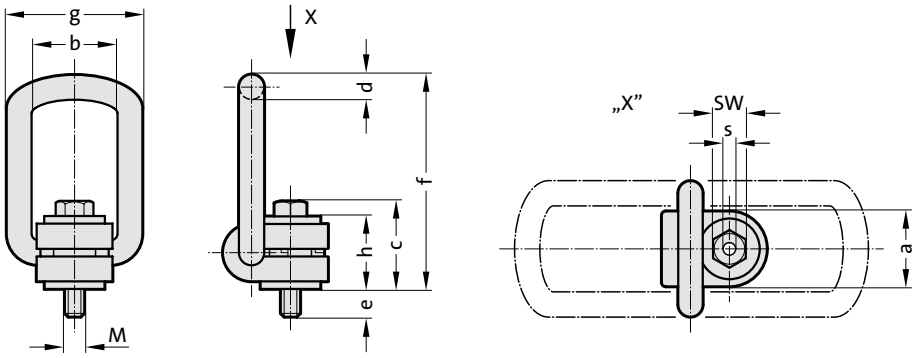

Description:

The hinged unit is free to rotate through 360°, self-align with the direction of pull and folding. The hoisting Snap Link must be installed in the stress direction before loading, must be able to move freely and may not be supported at an angle.
Do not rotate under load.
Full load bearing capacity in any direction.
Complete with a 100% crack-checked outer and inner hexagonal bolt for universal tool use.

Material:

Alloyed tool steel

Note:

Ensure even screw-in surface, threads must be screwed in completely.

2131.33. Hoisting snap link, omnidirectional

Order No	Rated carrying capacity [t]	M	g	a	b	c	d	e	f	h	s	SW*	Tightening torque [Nm]
2131.33.008.055	0.3	M8	55	30	35	35	11	12	84	28	6	13	30
2131.33.010.055	0.63	M10	55	30	35	36	11	16	86	29	6	17	60
2131.33.012.057	1	M12	57	33	37	44	14	18	98	36	8	19	100
2131.33.014.057	1.2	M14	57	33	37	45	14	21	98	36	10	22	120
2131.33.016.057	1.5	M16	57	33	37	46	14	24	98	36	10	24	150
2131.33.018.082	2	M18	82	50	54	57	17	26	142	44	12	30	200
2131.33.020.082	2.5	M20	82	50	54	57	17	30	142	44	12	30	250
2131.33.024.082	4	M24	82	50	54	59	17	36	142	44	14	36	400
2131.33.027.099	4	M27	99	60	65	79	23	38	170	62	17	41	400
2131.33.030.099	5	M30	99	60	65	81	23	48	170	62	17	46	500
2131.33.036.099	7	M36	99	60	65	86	23	56	177	63	22	55	700
2131.33.036.124	8	M36	124	77	85	101	27	62	225	78	22	55	800
2131.33.042.124	10	M42	124	77	85	104	27	72	225	78.5	24	65	1000
2131.33.042.158	15	M42	158	95	104	115	36	55	256	89	24	65	1500
2131.33.048.158	20	M48	158	95	104	119	36	74	258	89	27	75	2000

*SW = Width across flats

Max. carrying capacity "G" in tonnes for various types of attachment

Type of attachment, Arrangement of the suspension points										
Number of lines	1	1	2	2	2 symmetrical		3 and 4 symmetrical		2	3 and 4
Angle of inclination/ load direction	0°	90°	0°	90°	0–45°	45–60°	0–45°	45–60°	asymmetrical	asymmetrical
Order No	carrying capacity in tonnes									
2131.33.008.055	0.3	0.3	0.6	0.6	0.42	0.3	0.63	0.45	0.3	0.3
2131.33.010.055	0.63	0.63	1.26	1.26	0.88	0.63	1.32	0.95	0.63	0.63
2131.33.012.057	1	1	2	2	1.4	1	2.1	1.5	1	1
2131.33.014.057	1.2	1.2	2.4	2.4	1.7	1.2	2.5	1.8	1.2	1.2
2131.33.016.057	1.5	1.5	3	3	2.1	1.5	3.1	2.2	1.5	1.5
2131.33.018.082	2	2	4	4	2.8	2	4.2	3	2	2
2131.33.020.082	2.5	2.5	5	5	3.5	2.5	5.2	3.7	2.5	2.5
2131.33.024.082	4	4	8	8	5.6	4	8.4	6	4	4
2131.33.027.099	4	4	8	8	5.6	4	8.4	6	4	4
2131.33.030.099	5	5	10	10	7	5	10.5	7.5	5	5
2131.33.036.099	7	7	14	14	9.8	7	14.7	10.5	7	7
2131.33.036.154	8	8	16	16	11.2	8	16.8	12	8	8
2131.33.042.154	10	10	20	20	14	10	21	15	10	10
2131.33.042.158	15	15	30	30	21	15	31.5	22.5	15	15
2131.33.048.158	20	20	40	40	28	20	42	30	20	20

subject to alterations

Attachment point screwable profilift delta

2131.34.

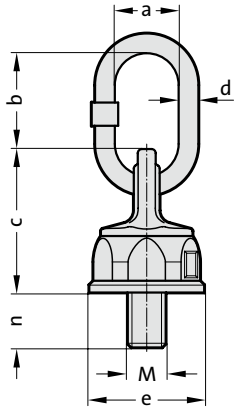

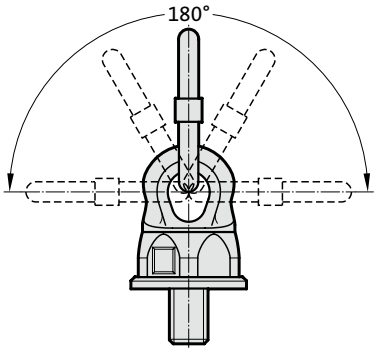

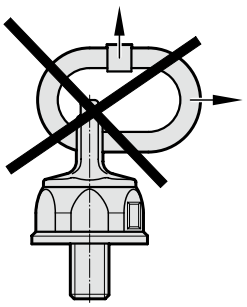



Description:

For loads which are turned and flipped.
Ball-bearing-mounted – under load turnable by 360°
Not suitable for continuous turning movements under full load.

Material:

Structural parts: High-strength chrome nickle alloyed Q & T steel.
Screws: High-strength screws strength class 12.9, 100 % crack tested

Note:

Ensure even screw-in surface, threads must be screwed in completely.
The threaded connection on the transport belt must be suitable for the force transmission.
Each attachment point is provided with an individual serial number

Information about installation and removal, see operating instructions.
Load capacity according to operating instructions or load capacity table in the specified directions of pull.

When selecting the arrangement, make sure that unequal loading does not occur, e.g. if:
- no free adjustment is possible in the direction of pull
- direction of pull does not lie in the specified range
- when fit closely at edges or surfaces
Safety factor 4

* 2131.34.014 only by request!

2131.34. Attachment point screwable profilift delta

Order No	Rated carrying capacity [t]	M	a	b	c	d	e	n
2131.34.008	0.3	M8	30	38	54	13	38	20
2131.34.010	0.5	M10	30	38	54	13	38	20
2131.34.012	0.7	M12	35	48	54	13	38	22
2131.34.014*	1	M14	35	48	54	13	38	22
2131.34.016	1.5	M16	35	48	54	13	38	33
2131.34.020	2.5	M20	35	55	75	16	55	33
2131.34.024	4	M24	40	66	82	17	63	40
2131.34.030	6	M30	50	70	92	23	72	40
2131.34.036	8	M36	50	91	124	23	92	55
2131.34.042	10	M42	65	91	124	27	92	60
2131.34.048	12.5	M48	65	116	124	27	92	68

Max. carrying capacity “G” in tonnes for various types of attachment

Type of attachment								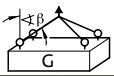			
Number of lines		1	1	2	2	2	2	3+4	3+4	2	3+4
Angle of inclination/load direction		0°	90°	0°	90°	0–45°	45–60°	0–45°	45–60°	asymme-trical	asymme-trical
Order No	tightening torque [Nm]	carrying capacity in tonnes									
2131.34.008	10	0.6	0.3	1.2	0.6	0.4	0.3	0.6	0.4	0.3	0.3
2131.34.010	10	1	0.5	2	1	0.7	0.5	1	0.75	0.5	0.5
2131.34.012	15	1.4	0.7	2.8	1.4	0.95	0.7	1.4	1	0.7	0.7
2131.34.014*	25	2	1	4	2	1.4	1	2.1	1.5	1	1
2131.34.016	30	2.8	1.5	5.6	3	2.1	1.5	3.1	2.1	1.5	1.5
2131.34.020	80	5	2.5	10	5	3.5	2.5	5.3	3.5	2.5	2.5
2131.34.024	150	7	4	14	8	5.5	4	8.4	6	4	4
2131.34.030	230	10	6	20	12	8.4	6	12.6	9	6	6
2131.34.036	450	12.5	8	25	16	11.2	8	16.8	12	8	8
2131.34.042	600	16	10	32	20	14	10	21	15	10	10
2131.34.048	600	16	12.5	32	25	17.5	12.5	26.5	18	12.5	12.5

Triple vortice ring



2131.35.

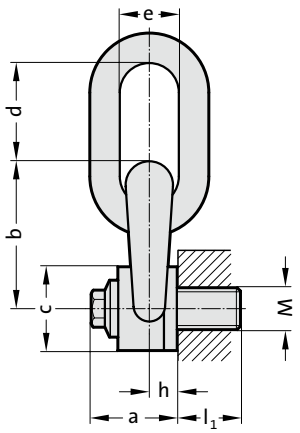

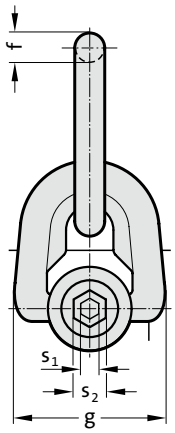

Description:

The triple vortice rings with double bearing mount for smooth tipping, turning and flipping.
Also turnable 90° for screw-in direction under full load.
Not suitable for continuous turning movement under full load.
The optimised design prevents damage to lifting tackle and the valuable load when turning.
For ring assembly, round slings, wire ropes, hook assemblies, etc.

Material:

High-strength chrome-nickle alloyed Q & T steel,
Screws: high-strength screws, min. strength category 10.9, 100 % crack inspected

Note:

Ensure even screw-in surface, threads must be screwed in completely.

2131.35. Triple vortice ring

Order No	Rated carrying capacity [t]	M	l_1	s_1	s_2	a	b	c	d	e	f	g	h	Tightening torque [Nm]
2131.35.008	0.3	M8	14	8	16	33	56	30	41	25	10	58	5.5	6
2131.35.010	0.6	M10	17	8	16	33	56	30	41	25	10	58	9.5	10
2131.35.012	1	M12	21	8	16	33	56	30	41	25	10	58	9.5	15
2131.35.014	1.3	M14	23	8	20	45	76	45	56	37	14	79	13	30
2131.35.016	1.6	M16	27	8	20	45	76	45	56	37	14	79	13	50
2131.35.018	2	M18	27	8	20	45	76	45	56	37	14	79	13	70
2131.35.020	2.5	M20	30	8	20	45	81	45	56	37	14	79	13	100
2131.35.022	3	M22	33	14	24	62	105	60	80	45	20	106	19	120
2131.35.024	4	M24	36	14	24	62	105	60	80	45	20	106	19	160
2131.35.027	5	M27	36	14	24	62	105	60	80	45	20	106	19	160
2131.35.030	6.3	M30	45	14	24	62	105	60	80	45	20	106	19	250
2131.35.036	10	M36	54	19	30	81	140	80	111	71	30	148	26.5	320
2131.35.042	12.5	M42	63	19	30	84	146	80	111	71	30	148	26.5	400
2131.35.048	20	M48	68	19	30	100	178	110	135	90	42	180	33	600
2131.35.056	22	M56	78	19	30	104	184	110	135	90	42	190	33	600

Max. carrying capacity “G” in tonnes for various types of attachment

Type of attachment, Arrangement of the suspension points										
Number of lines	1	1	2	2	2 symmetrical		4 symmetrical		2	3 and 4
Angle of inclination/ load direction	0°	90°	0°	90°	0–45°	45–60°	0–45°	45–60°	asymme-trical	asymme-trical
Order No	carrying capacity in tonnes									
2131.35.008	0.3	0.3	0.6	0.6	0.4	0.3	0.6	0.3	0.3	0.3
2131.35.010	0.6	0.6	1.2	1.2	0.8	0.6	1.3	0.6	0.6	0.6
2131.35.012	1	1	2	2	1.4	1	2.1	1	1	1
2131.35.014	1.3	1.3	2.6	2.6	1.8	1.3	2.7	1.3	1.3	1.3
2131.35.016	1.6	1.6	3.2	3.2	2.2	1.6	3.4	1.6	1.6	1.6
2131.35.018	2	2	4	4	2.8	2	4.2	2	2	2
2131.35.020	2.5	2.5	5	5	3.5	2.5	5.3	2.5	2.5	2.5
2131.35.022	3	3	6	6	4.2	3	6.3	3	3	3
2131.35.024	4	4	8	8	5.6	4	8.4	4	4	4
2131.35.027	5	5	10	10	7	5	10.5	5	5	5
2131.35.030	6.3	6.3	12.6	12.6	8.8	6.3	13.2	6.3	6.3	6.3
2131.35.036	10	10	20	20	14	10	21	10	10	10
2131.35.042	12.5	12.5	25	25	17.5	12.5	26.3	12.5	12.5	12.5
2131.35.048	20	20	40	40	28	20	42	20	20	20
2131.35.056	22	22	44	40	30.8	22	46.2	22	22	22

Double vortice hook

2131.36.

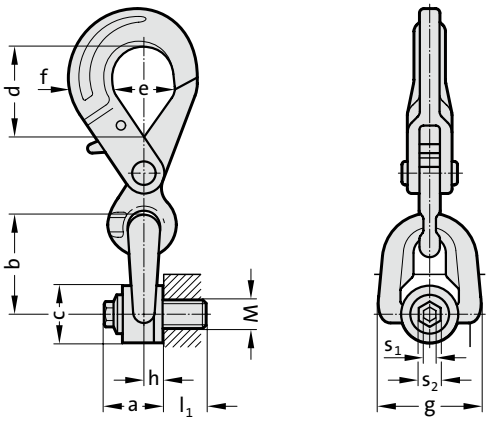



Description:

The double vortice rings with double bearing mount for smooth tipping, turning and flipping.
Also turnable 90° for screw-in direction under full load.
Not suitable for continuous turning movement under full load.
The optimised design prevents damage to lifting tackle and the valuable load when turning.
For ring assembly, round slings, wire ropes, hook assemblies, etc.

Material:

High-strength chrome-nickle alloyed Q & T steel,
Screws: high-strength screws, min. strength category 10.9, 100 % crack inspected

Note:

Ensure even screw-in surface, threads must be screwed in completely.

2131.36. Double vortice hook

Order No	Rated carrying capacity [t]	M	l_1	s_1	s_2	a	b	c	d	e	f	g	h	Tightening torque [Nm]
2131.36.008	0.3	M8	14	8	16	33	56	30	44	32	23	58	9.5	6
2131.36.010	0.6	M10	17	8	16	33	56	30	44	32	23	58	9.5	10
2131.36.012	1	M12	21	8	16	33	56	30	44	32	23	58	9.5	15
2131.36.014	1.3	M14	23	8	20	45	76	45	58	46	29	79	13	30
2131.36.016	1.6	M16	27	8	20	45	76	45	58	46	29	79	13	50
2131.36.018	2	M18	27	8	20	45	76	45	58	46	29	79	13	70
2131.36.020	2.5	M20	30	8	20	45	81	45	58	46	29	79	13	100

Max. carrying capacity “G” in tonnes for various types of attachment

Type of attachment, Arrangement of the suspension points							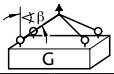			
Number of lines	1	1	2	2	2 symmetrical		4 symmetrical		2	3 and 4
Angle of inclination/ load direction	0°	90°	0°	90°	0–45°	45–60°	0–45°	45–60°	asymme-trical	asymme-trical
Order No	carrying capacity in tonnes									
2131.36.008	0.3	0.3	0.6	0.6	0.4	0.3	0.6	0.3	0.3	0.3
2131.36.010	0.6	0.6	1.2	1.2	0.8	0.6	1.3	0.6	0.6	0.6
2131.36.012	1	1	2	2	1.4	1	2.1	1	1	1
2131.36.014	1.3	1.3	2.6	2.6	1.8	1.3	2.7	1.3	1.3	1.3
2131.36.016	1.6	1.6	3.2	3.2	2.2	1.6	3.4	1.6	1.6	1.6
2131.36.018	2	2	4	4	2.8	2	4.2	2	2	2
2131.36.020	2.5	2.5	5	5	3.5	2.5	5.3	2.5	2.5	2.5

FIBRO

Double vortice ring



2131.37.

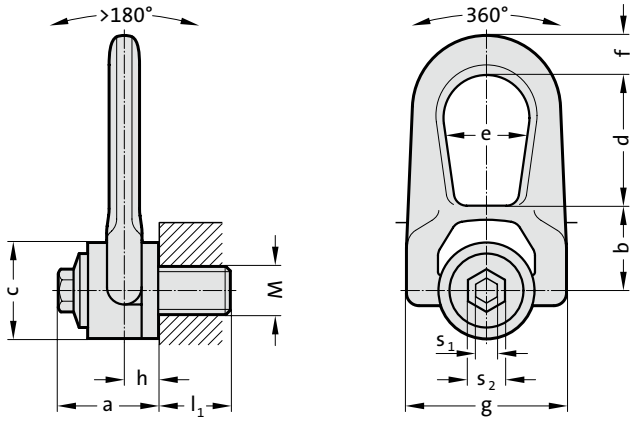

Description:

The double vortex ring was especially designed to guarantee lifting under rotation.
Its double joint permits a perfect alignment for load suspension.

Material:

High-strength chrome-nickle alloyed Q & T steel,
Screws: high-strength screws, min. strength category 10.9, 100 % crack inspected

Note:

Ensure even screw-in surface, threads must be screwed in completely.
The threaded connection on the transport belt must be suitable for the force transmission.
Each attachment point is provided with an individual serial number
Information about installation and removal, see operating instructions.
Load capacity according to operating instructions or load capacity table in the specified directions of pull.

When selecting the arrangement, make sure that unequal loading does not occur, e.g. if:
- no free adjustment is possible in the direction of pull
- direction of pull does not lie in the specified range
Safety factor 5

2131.37. Double vortice ring

Order No	Rated carrying capacity [t]	M	l_1	s_1	s_2	a	b	c	d	e	f	g	h	Tightening torque [Nm]
2131.37.004	0.05	M4	15	3	16	33	30	30	38	27	14	53	9.5	2
2131.37.005	0.075	M5	15	4	16	33	30	30	38	27	14	53	9.5	3
2131.37.006	0.1	M6	15	5	16	33	30	30	38	27	14	53	9.5	4
2131.37.008	0.3	M8	14	8	16	33	30	30	38	27	14	53	9.5	6
2131.37.010	0.6	M10	17	8	16	33	30	30	38	27	14	53	9.5	10
2131.37.012	1	M12	21	8	16	33	30	30	38	27	14	53	9.5	15
2131.37.014	1.3	M14	23	8	20	45	42	45	54	38	17	76	13	30
2131.37.016	1.6	M16	27	8	20	45	42	45	54	38	17	76	13	50
2131.37.018	2	M18	27	8	20	45	42	45	54	38	17	76	13	70
2131.37.020	2.5	M20	30	8	20	45	42	45	54	38	17	76	13	100
2131.37.022	3	M22	33	14	24	62	55	60	83	55	25	117	19	120
2131.37.024	4	M24	36	14	24	62	55	60	83	55	25	117	19	160
2131.37.027	5	M27	40	14	24	62	55	60	83	55	25	117	19	160
2131.37.030	6.3	M30	45	14	24	62	55	60	83	55	25	117	19	250

Max. carrying capacity “G” in tonnes for various types of attachment

Type of attachment, Arrangement of the suspension points	G	G	G	G	G		G		G	G
Number of lines	1	1	2	2	2 symmetrical		3+4 symmetrical		2	3 and 4
Angle of inclination/ load direction	0°	90°	0°	90°	0–45°	45–60°	0–45°	45–60°	asymme-trical	asymme-trical
Order No	carrying capacity in tonnes									
2131.37.004	0.05	0.05	0.1	0.1	0.07	0.05	0.1	0.05	0.05	0.05
2131.37.005	0.075	0.075	0.15	0.15	0.1	0.6	0.15	0.075	0.075	0.05
2131.37.006	0.1	0.1	0.2	0.2	1.4	0.1	0.2	0.1	0.1	0.1
2131.37.008	0.3	0.3	0.6	0.6	0.4	0.3	0.6	0.3	0.3	0.3
2131.37.010	0.6	0.6	1.2	1.2	0.8	0.6	1.3	0.6	0.6	0.6
2131.37.012	1	1	2	2	1.4	1	2.1	1	1	1
2131.37.014	1.3	1.3	2.6	2.6	1.8	1.3	2.7	1.3	1.3	1.3
2131.37.016	1.6	1.6	3.2	3.2	2.2	1.6	3.4	1.6	1.6	1.6
2131.37.018	2	2	4	4	2.8	2	4.2	2	2	2
2131.37.020	2.5	2.5	5	5	3.5	2.5	5.3	2.5	2.5	2.5
2131.37.022	3	3	6	6	4.2	3	6.3	3	3	3
2131.37.024	4	4	8	8	5.6	4	8.4	4	4	4
2131.37.027	5	5	10	10	7	5	10.5	5	5	5
2131.37.030	6.3	6.3	12.6	12.6	8.8	6.3	13.2	6.3	6.3	6.3

subject to alterations

Double vortice ring with central device

2131.38.

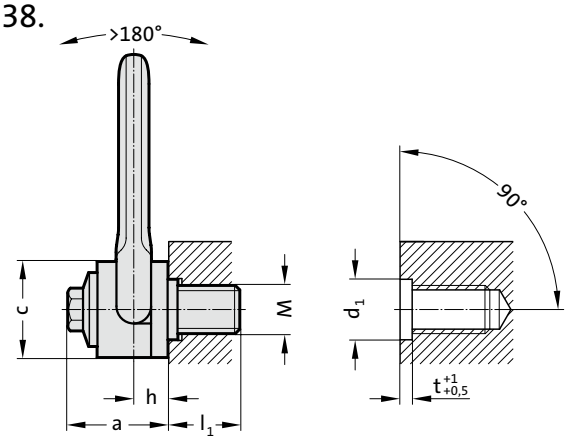



Description:

The double vortex ring with centring device was especially designed to guarantee lifting under rotation.
The centring device increases the resistance of the axis in case of lateral mounting.

Material:

High-strength chrome-nickle alloyed Q & T steel,
Screws: high-strength screws, min. strength category 10.9, 100 % crack inspected

Note:

Ensure even screw-in surface, threads must be screwed in completely.
The threaded connection on the transport belt must be suitable for the force transmission.
Each attachment point is provided with an individual serial number
Information about installation and removal, see operating instructions.
Load capacity according to operating instructions or load capacity table in the specified directions of pull.

When selecting the arrangement, make sure that unequal loading does not occur, e.g. if:
- no free adjustment is possible in the direction of pull
- direction of pull does not lie in the specified range
Safety factor 5

2131.38. Double vortice ring with central device

Order No	Rated carrying capacity [t]	M	l_1	s_1	s_2	a	b	c	d	e	f	g	h	d_1	Tolérances d_1	t	Tightening torque [Nm]
2131.38.004	0.05	M4	15	3	16	33	30	30	38	27	14	53	9.5	16	+0,25/0	3	2
2131.38.005	0.075	M5	15	4	16	33	30	30	38	27	14	53	9.5	16	+0,25/0	3	3
2131.38.006	0.1	M6	15	5	16	33	30	30	38	27	14	53	9.5	16	+0,25/0	3	4
2131.38.008	0.5	M8	14	8	16	33	30	30	38	27	14	53	9.5	16	+0,25/0	3	6
2131.38.010	0.8	M10	17	8	16	33	30	30	38	27	14	53	9.5	20	+0,25/0	3	10
2131.38.012	1.2	M12	21	8	16	33	30	30	38	27	14	53	9.5	20	+0,25/0	3	15
2131.38.014	1.3	M14	23	8	20	45	42	45	54	38	17	76	13	20	+0,30/0	3	30
2131.38.016	2	M16	27	8	20	45	42	45	54	38	17	76	13	20	+0,30/0	3	50
2131.38.018	2	M18	27	8	20	45	42	45	54	38	17	76	13	30	+0,30/0	3	70
2131.38.020	2.7	M20	30	8	20	45	42	45	54	38	17	76	13	30	+0,30/0	3	100
2131.38.022	3	M22	33	14	24	62	55	60	83	55	25	117	19	30	+0,30/0	4	120
2131.38.024	5	M24	36	14	24	62	55	60	83	55	25	117	19	30	+0,30/0	4	160
2131.38.027	5	M27	40	14	24	62	55	60	83	55	25	117	19	36	+0,30/0	4	200
2131.38.030	6.3	M30	45	14	24	62	55	60	83	55	25	117	19	36	+0,30/0	4	250

Max. carrying capacity “G” in tonnes for various types of attachment

Type of attachment, Arrangement of the suspension points				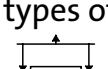	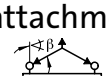		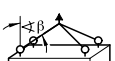			
Number of lines	1	1	2	2	2 symmetrical		3+4 symmetrical		2	3 and 4
Angle of inclination/ load direction	0°	90°	0°	90°	0–45°	45–60°	0–45°	45–60°	asymme-trical	asymme-trical
Order No	carrying capacity in tonnes									
2131.38.004	0.05	0.05	0.1	0.1	0.07	0.05	0.1	0.05	0.05	0.05
2131.38.005	0.075	0.075	0.15	0.15	0.1	0.075	0.15	0.075	0.075	0.075
2131.38.006	0.1	0.1	0.2	0.2	0.14	0.1	0.21	0.1	0.1	0.1
2131.38.008	0.5	0.5	1	1	0.7	0.5	1.05	0.5	0.5	0.5
2131.38.010	0.8	0.8	1.6	1.6	1.12	0.8	1.68	0.8	0.8	0.8
2131.38.012	1.2	1.2	2.4	1.68	1.2	1.2	2.52	1.2	1.2	1.2
2131.38.014	1.3	1.3	2.6	2.6	1.82	1.3	2.73	1.3	1.3	1.3
2131.38.016	2	2	4	4	2.8	2	4.2	2	2	2
2131.38.018	2	2	4	4	2.8	2	4.2	2	2	2
2131.38.020	2.7	2.7	5.4	5.4	3.78	2.7	5.67	2.7	2.7	2.7
2131.38.022	3	3	6	6	4.2	3	6.3	3	3	3
2131.38.024	5	5	10	10	7	5	10.5	5	5	5
2131.38.027	5	5	10	10	7	5	10.5	5	5	5
2131.38.030	6.3	6.3	12.6	12.6	8.82	6.3	13.23	6.3	6.3	6.3

FIBRO

Double vortice ring with internal thread



2131.39.

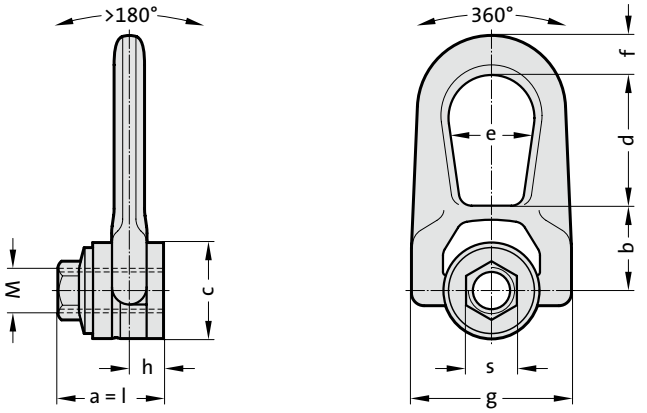

Description:

The double vortex ring with internal thread was especially designed to guarantee lifting under rotation.
Its double joint permits a perfect alignment for load suspension.

Material:

High-strength chrome-nickle alloyed Q & T steel

Note:

Ensure even screw-in surface, threads must be screwed in completely.
The threaded connection on the transport belt must be suitable for the force transmission.

Each attachment point is provided with an individual serial number
Information about installation and removal, see operating instructions.
Load capacity according to operating instructions or load capacity table in the specified directions of pull.

When selecting the arrangement, make sure that unequal loading does not occur, e.g. if:
- no free adjustment is possible in the direction of pull
- direction of pull does not lie in the specified range
Safety factor 5

2131.39. Double vortice ring with internal thread

Order No	Rated carrying capacity [t]	M	l	s	a	b	c	d	e	f	g	h	Tightening torque [Nm]
2131.39.008	0.3	M8	45	20	45	42	45	54	38	17	76	13	6
2131.39.010	0.6	M10	45	20	45	42	45	54	38	17	76	13	10
2131.39.012	1	M12	45	20	45	42	45	54	38	17	76	13	15
2131.39.014	1	M14	45	20	45	42	45	54	38	17	76	13	30
2131.39.016	1.6	M16	45	20	45	42	45	54	38	17	76	19	50
2131.39.018	2	M18	62	24	62	55	60	83	55	25	117	19	70
2131.39.020	2.5	M20	62	24	62	55	60	83	55	25	117	19	100
2131.39.022	3	M22	62	24	62	55	60	83	55	25	117	19	120

Max. carrying capacity “G” in tonnes for various types of attachment

Type of attachment, Arrangement of the suspension points							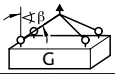			
Number of lines	1	1	2	2	2 symmetrical		3+4 symmetrical		2	3 and 4
Angle of inclination/ load direction	0°	90°	0°	90°	0–45°	45–60°	0–45°	45–60°	asymme-trical	asymme-trical
Order No	carrying capacity in tonnes									
2131.39.008	0.3	0.3	0.6	0.6	0.4	0.3	0.6	0.3	0.3	0.3
2131.39.010	0.6	0.6	1.2	1.2	0.8	0.6	1.3	0.6	0.6	0.6
2131.39.012	1	1	2	2	1.4	1	2.1	1	1	1
2131.39.014	1.3	1.3	2.6	2.6	1.8	1.3	2.7	1.3	1.3	1.3
2131.39.016	1.6	1.6	3.2	3.2	2.2	1.6	3.4	1.6	1.6	1.6
2131.39.018	2	2	4	4	2.8	2	4.2	2	2	2
2131.39.020	2.5	2.5	5	5	3.5	2.5	5.3	2.5	2.5	2.5
2131.39.022	3	3	6	6	4.2	3	6.3	3	3	3

Double vortex ring screw

2131.40.

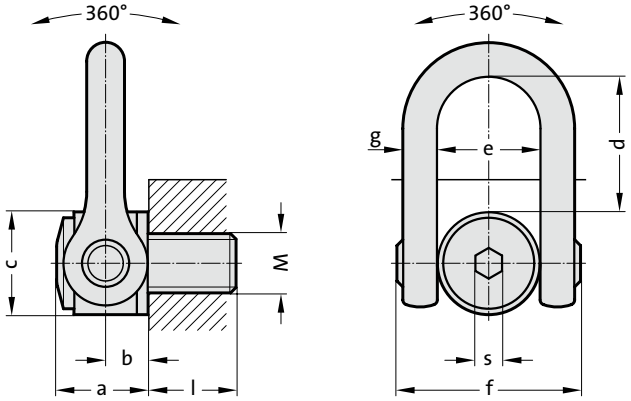



Description:

The double vortex ring screw was especially designed for the lifting and rotating of heavy loads.
Load bearing capacity in all directions and perfect alignment for load suspension.

Material:

High-strength chrome-nickle alloyed Q & T steel,
Screws: high-strength screws, min. strength category 10.9, 100 % crack inspected

Note:

Ensure even screw-in surface, threads must be screwed in completely.
The threaded connection on the transport belt must be suitable for the force transmission.
Each attachment point is provided with an individual serial number
Information about installation and removal, see operating instructions.
Load capacity according to operating instructions or load capacity table in the specified directions of pull.

When selecting the arrangement, make sure that unequal loading does not occur, e.g. if:
- no free adjustment is possible in the direction of pull
- direction of pull does not lie in the specified range
Safety factor 5 - 2131.40.024 through 2131.40.042
Safety factor 4 - 2131.40.045 through 2131.40.100

2431.40. Double vortex ring screw

Order No	Rated carrying capacity [t]	M	l	s	a	b	c	d	e	f	g	Tightening torque [Nm]
2131.40.024	4.5	M24	36	19	61	31	70	104	73	145	29	160
2131.40.030	7.3	M30	45	19	61	31	70	104	73	145	29	250
2131.40.033	8	M33	50	19	61	31	70	104	73	145	29	250
2131.40.036	10	M36	54	19	61	31	70	104	73	145	29	320
2131.40.039	10	M39	58	19	61	31	70	104	73	145	29	320
2131.40.042	12.5	M42	63	19	61	31	70	104	73	145	29	400
2131.40.045	15	M45	63	19	61	31	70	104	73	145	29	400
2131.40.048	20	M48	68	19	79	38	90	125	91	184	36	600
2131.40.052	20	M52	68	19	79	38	90	125	91	184	36	600
2131.40.056	25	M56	78	19	79	38	90	125	91	184	36	600
2131.40.064	32.1	M64	90	19	79	38	95	125	91	184	36	600
2131.40.072	25	M72	90	19	79	38	95	125	91	184	36	600
2131.40.080	32.1	M80	90	19	79	38	95	125	91	184	36	600
2131.40.090	32.1	M90	90	19	79	38	95	125	91	184	36	600
2131.40.100	32.1	M100	90	19	79	38	95	125	91	184	36	600

Max. carrying capacity “G” in tonnes for various types of attachment

Type of attachment, Arrangement of the suspension points										
Number of lines	1	1	2	2	2 symmetrical		3+4 symmetrical		2	3 and 4
Angle of inclination/ load direction	0°	90°	0°	90°	0–45°	45–60°	0–45°	45–60°	asymme-trical	asymme-trical
Order No	carrying capacity in tonnes									
2131.40.024	4.5	4.5	9	9	6.3	4.5	9.5	4.5	4.5	4.5
2131.40.030	7.3	7.3	14.6	14.6	10.2	7.3	15.3	7.3	7.3	4.5
2131.40.033	8	8	16	16	11.2	8	16.8	8	8	8
2131.40.036	10	10	20	20	14	10	21	10	10	10
2131.40.039	10	10	20	20	14	10	21	10	10	10
2131.40.042	12.5	12.5	25	25	17.5	12.5	26.3	12.5	12.5	12.5
2131.40.045	15	15	30	30	21	15	31.5	15	15	15
2131.40.048	20	20	40	40	28	20	42	20	20	20
2131.40.052	20	20	40	40	28	20	42	20	20	20
2131.40.056	25	25	50	50	35	25	52.5	25	25	25
2131.40.064	32.1	32.1	64.2	64.2	44.9	32.1	67.4	32.1	32.1	32.1
2131.40.072	25	25	50	50	35	25	52.5	25	25	32.1
2131.40.080	32.1	32.1	64.2	64.2	44.9	32.1	67.4	32.1	32.1	32.1
2131.40.090	32.1	32.1	64.2	64.2	44.9	32.1	67.4	32.1	32.1	32.1
2131.40.100	32.1	32.1	64.2	64.2	44.9	32.1	67.4	32.1	32.1	32.1

Double vortex ring screw with centring



2131.41.

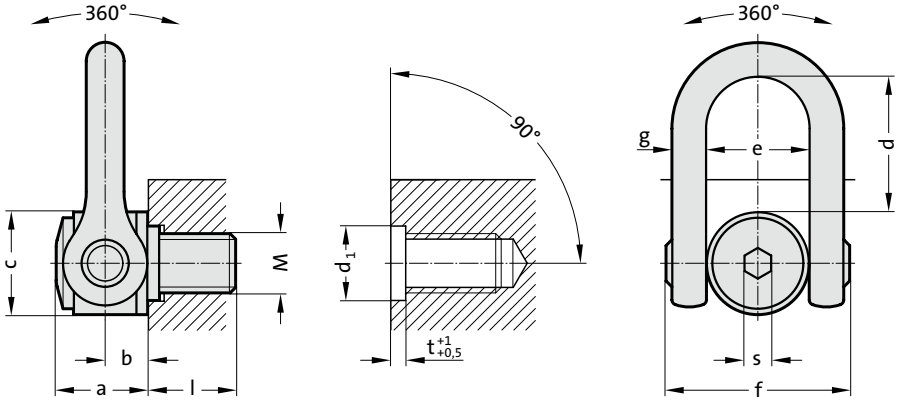

Description:

The double vortex ring screw with centring device was especially designed for the lifting and rotating of heavy loads. The centring device increases the resistance of the axis in case of lateral mounting.
Load bearing capacity in all directions and perfect alignment for load suspension.

Material:

High-strength chrome-nickle alloyed Q & T steel,
Screws: high-strength screws, min. strength category 10.9, 100 % crack inspected

Note:

Ensure even screw-in surface, threads must be screwed in completely. The threaded connection on the transport belt must be suitable for the force transmission.
Each attachment point is provided with an individual serial number
Information about installation and removal, see operating instructions.
Load capacity according to operating instructions or load capacity table in the specified directions of pull.

When selecting the arrangement, make sure that unequal loading does not occur, e.g. if:
- no free adjustment is possible in the direction of pull
- direction of pull does not lie in the specified range
Safety factor 5 - 2131.41.024 through 2131.41.042
Safety factor 4 - 2131.41.045 through 2131.41.064

2134.41. Double vortex ring screw with centring

Order No	Rated carrying capacity [t]	M	l	s	a	b	c	d	e	f	g	d_1	Tolérances d_1	t	Tightening torque [Nm]
2131.41.024	5	M24	36	19	61	31	70	104	73	145	29	30	+0,3/0	4	160
2131.41.030	8	M30	45	19	61	31	70	104	73	145	29	36	+0,3/0	4	250
2131.41.033	8	M33	50	19	61	31	70	104	73	145	29	48	+0,3/+0,1	6	250
2131.41.036	11	M36	54	19	61	31	70	104	73	145	29	48	+0,5/+0,1	6	320
2131.41.042	13	M42	63	19	61	31	70	104	73	145	29	48	+0,5/+0,1	6	400
2131.41.045	15	M45	63	19	61	31	70	104	73	145	29	48	+0,5/+0,1	8	400
2131.41.048	22	M48	68	19	79	38	90	125	91	184	36	64	+0,6/+0,1	8	600
2131.41.056	26	M56	78	19	79	38	90	125	91	184	36	64	+0,6/+0,1	8	600
2131.41.064	32.1	M64	90	19	79	38	95	125	91	184	36	74	+0,6/+0,1	10	600

Max. carrying capacity “G” in tonnes for various types of attachment

Type of attachment, Arrangement of the suspension points					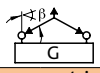		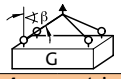			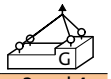
Number of lines	1	1	2	2	2 symmetrical		3+4 symmetrical		2	3 and 4
Angle of inclination/ load direction	0°	90°	0°	90°	0–45°	45–60°	0–45°	45–60°	asymmetrical	asymmetrical
Order No	carrying capacity in tonnes									
2131.41.024	5	5	10	10	7	5	10.5	5	5	5
2131.41.030	8	8	16	16	11.2	8	16.8	8	8	8
2131.41.033	8	8	16	16	11.2	8	16.8	8	8	8
2131.41.036	11	11	22	22	15.4	11	23.1	11	11	11
2131.41.042	13	13	26	26	18.2	13	27.3	13	13	13
2131.41.045	15	15	30	30	21	15	31.5	15	15	15
2131.41.048	22	22	44	44	30.8	22	46.2	22	22	22
2131.41.056	26	26	52	52	36.4	26	54.6	26	26	26
2131.41.064	32.1	32.1	64.2	64.2	44.9	32.1	67.4	32.1	32.1	32.1

Double vortex ring screw Mega DSS

2131.42.

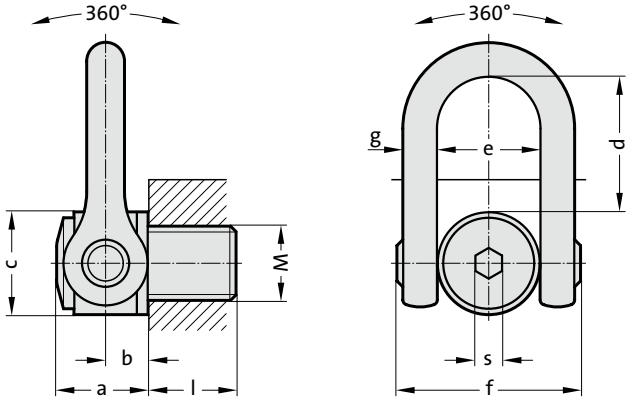



Description:

The Mega double vortex ring screw was specially designed to lift and rotate under a load of up to 50 tons. It can be used directly with the lifting equipment (hook of the travelling crane).
Load bearing capacity in all directions and perfect alignment for load suspension.

Material:

High-strength chrome-nickle alloyed Q & T steel,
Screws: high-strength screws, min. strength category 10.9, 100 % crack inspected

Note:

Ensure even screw-in surface, threads must be screwed in completely.
The threaded connection on the transport belt must be suitable for the force transmission.
Each attachment point is provided with an individual serial number
Information about installation and removal, see operating instructions.
Load capacity according to operating instructions or load capacity table in the specified directions of pull.

When selecting the arrangement, make sure that unequal loading does not occur, e.g. if:
- no free adjustment is possible in the direction of pull
- direction of pull does not lie in the specified range
Safety factor 4

2131.42. Double vortex ring screw Mega DSS

Order No	Rated carrying capacity [t]	M	l	s	a	b	c	d	e	f	g	Tightening torque [Nm]
2131.42.064	33	M64	100	36	127.5	64.5	158	186	143	278	57.5	600
2131.42.072	35	M72	110	36	127.5	64.5	158	186	143	278	57.5	700
2131.42.080	40	M80	120	36	127.5	64.5	158	186	143	278	57.5	800
2131.42.090	45	M90	135	36	127.5	64.5	158	186	143	278	57.5	900
2131.42.100	50	M100	150	36	127.5	64.5	158	186	143	278	57.5	1000

Max. carrying capacity “G” in tonnes for various types of attachment

Type of attachment, Arrangement of the suspension points	G	G	G	G	G	G	G	G	G	G
Number of lines	1	1	2	2	2 symmetrical		3+4 symmetrical		2	3 and 4
Angle of inclination/ load direction	0°	90°	0°	90°	0–45°	45–60°	0–45°	45–60°	asymme-trical	asymme-trical
Order No	carrying capacity in tonnes									
2131.42.064	33	33	66	66	46	33	69	33	33	33
2131.42.072	35	35	70	70	49	35	74	35	35	35
2131.42.080	40	40	80	80	56	40	84	40	40	40
2131.42.090	45	45	90	90	63	45	95	45	45	45
2131.42.100	50	50	100	100	70	50	105	50	50	50

FIBRO

Double vortice ring with internal thread



2131.43.

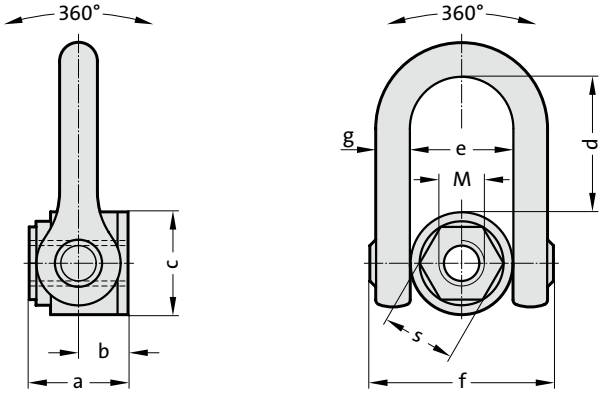

Description:

The double vortex ring with internal thread was especially designed for the lifting and rotating of heavy loads.
Its double joint permits a perfect alignment for load suspension.

Material:

High-strength chrome-nickle alloyed Q & T steel

Note:

Ensure even screw-in surface, threads must be screwed in completely.
The threaded connection on the transport belt must be suitable for the force transmission.

Each attachment point is provided with an individual serial number
Information about installation and removal, see operating instructions.
Load capacity according to operating instructions or load capacity table in the specified directions of pull.

When selecting the arrangement, make sure that unequal loading does not occur, e.g. if:
- no free adjustment is possible in the direction of pull
- direction of pull does not lie in the specified range

Safety factor 5 - 2131.43.024 through 2131.43.042
Safety factor 4 - 2131.43.045 through 2131.43.052

2131.43. Double vortice ring with internal thread

Order No	Rated carrying capacity [t]	M	l	s	a	b	c	d	e	f	g	Tightening torque [Nm]
2131.43.024	4.5	M24	66	50	66	31	70	104	73	145	29	160
2131.43.027	5	M27	66	50	66	31	70	104	73	145	29	200
2131.43.030	7.3	M30	66	50	66	31	70	104	73	145	29	250
2131.43.033	8	M33	66	50	66	31	70	104	73	145	29	250
2131.43.036	10	M36	66	50	66	31	70	104	73	145	29	320
2131.43.039	10	M39	89	60	89	38	95	125	91	184	36	320
2131.43.042	12.5	M42	89	60	89	38	95	125	91	184	36	400
2131.43.045	15	M45	89	60	89	38	95	125	91	184	36	400
2131.43.048	20	M48	89	60	89	38	95	125	91	184	36	600
2131.43.052	20	M52	89	60	89	38	95	125	91	184	36	600

Max. carrying capacity “G” in tonnes for various types of attachment

Type of attachment, Arrangement of the suspension points	G	G	G	G	G	G	G	G	G	G
Number of lines	1	1	2	2	2 symmetrical		3+4 symmetrical		2	3 and 4
Angle of inclination/ load direction	0°	90°	0°	90°	0–45°	45–60°	0–45°	45–60°	asymme-trical	asymme-trical
Order No	carrying capacity in tonnes									
2131.43.024	4.5	4.5	9	9	6.3	4.5	9.5	4.5	4.5	4.5
2131.43.027	5	5	10	10	7	5	10.5	5	5	5
2131.43.030	7.3	7.3	14.6	14.6	10.2	7.3	15.3	7.3	7.3	7.3
2131.43.033	8	8	16	16	11.2	8	16.8	8	8	8
2131.43.036	10	10	20	20	14	10	21	10	10	10
2131.43.039	10	10	20	20	14	10	21	10	10	10
2131.43.042	12.5	12.5	25	25	17.5	12.5	26.3	12.5	12.5	12.5
2131.43.045	15	15	30	30	21	15	31.5	15	15	15
2131.43.048	20	20	40	40	28	20	42	20	20	20
2131.43.052	20	20	40	40	28	20	42	20	20	20

Attachment point weldable profilift eta

2131.50.

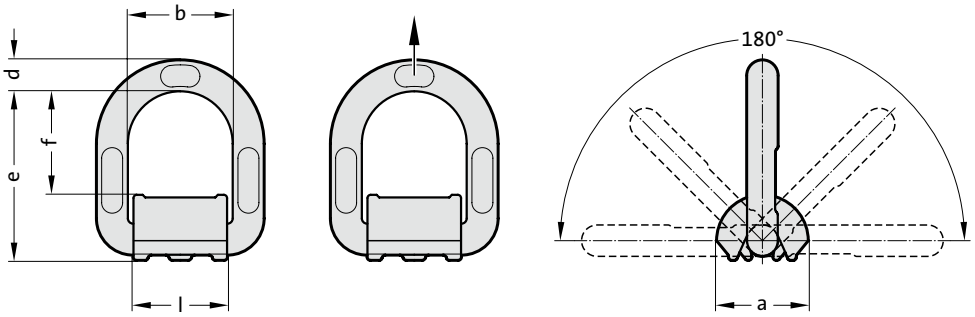



Description:

For welding work, the conditions according to DIN EN ISO 14341 apply.
Welding work may only be performed by a welder with qualification according to EN 287-1.

Material:

Weld-on bracket: S355 J2 G3
Ring: high-strength alloyed steel

Note:

Information about installation and removal, see operating instructions.
Load capacity according to operating instructions or load capacity table in the specified directions of pull.

When selecting the arrangement, make sure that unequal loading does not occur, e.g. if:
- no free adjustment is possible in the direction of pull
- direction of pull does not lie in the specified range
- when fit closely at edges or surfaces

2131.50. Attachment point weldable profilift eta

Order No	Rated carrying capacity [t]	Size	a	b	d	e	f	l
2131.50.006	1.12	006	36	40	11	67	42	35
2131.50.008	2	008	37	42	13	73	45	37
2131.50.010	3.15	010	41	45	16.5	80	47	40
2131.50.013	5.3	013	61	55	22	97	53	50
2131.50.016	8	016	63	70	25	120	73	64
2131.50.022	15	022	89	97	33	163	92	90

Max. carrying capacity “G” in tonnes for various types of attachment

Type of attachment					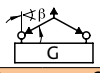		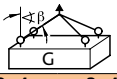			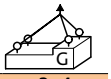
Number of lines	1	1	2	2	2	2	3+4	3+4	2	3+4
Angle of inclination/ load direction	0°	90°	0°	90°	0–45°	45–60°	0–45°	45–60°	asymme-trical	asymme-trical
Order No	carrying capacity in tonnes									
2131.50.006	1.12	1.12	2.24	2.24	1.5	1.12	2.3	1.6	1.12	1.12
2131.50.008	2	2	4	4	2.8	2	4.2	3	2	2
2131.50.010	3.15	3.15	6.3	6.3	4.4	3.15	6.6	4.7	3.15	3.15
2131.50.013	5.3	5.3	10.6	10.6	7.4	5.3	11.2	7.9	5.3	5.3
2131.50.016	8	8	16	16	11.3	8	16.9	12	8	8
2131.50.022	15	15	30	30	21	15	31.8	22.5	15	15

Lifting flange with bolt with safety ring, to BMW

2133.11.

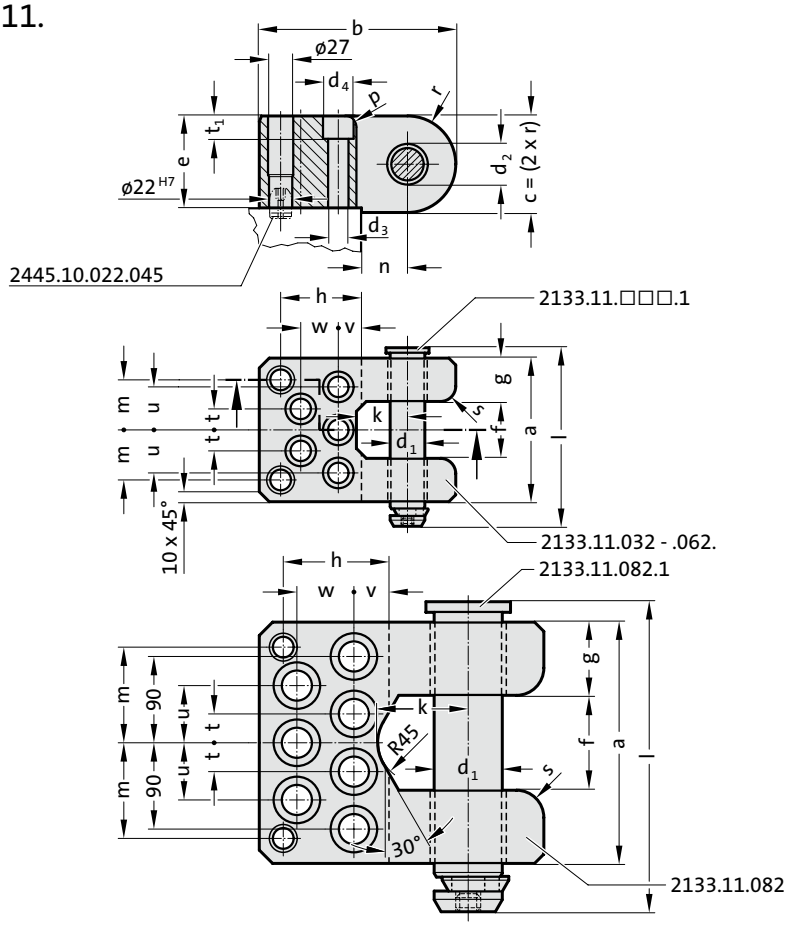



Note:

Centering pin 2445.10.022.045 to be ordered separately

Order No for spare part bolt with safety ring: 2133.11.□□□.1
Order No for lifting flange with bolt, with safety ring, two centering pins and fixing screws, to BMW: 2133.11.00.15.□□□, 2133.11.00.15.062.36

2133.11. Lifting flange with bolt with safety ring, to BMW

Order No	max. carrying capacity (2 lifting flanges) [kg]*	d_1	d_2	a	b	c	e	f	g	h	k	l	m	n	p	s	t	u	v	w	d_3	d_4	t_1	Socket head cap screw DIN EN ISO 4762
2133.11.032	6400	30	32	126	185	80	75	50	38	85	50	158	45	40	12	16	20	40	30	35	17.5	26	17.5	M16x80
2133.11.042	10000	40	42	150	210	100	95	60	45	87	55	187	52	50	12	20	22.5	45	25	40	22	33	21.5	M20x100
2133.11.052	16000	50	52	175	240	120	115	75	50	95	70	220	62.5	60	16	24	25	50	35	45	26	40	25.5	M24x120
2133.11.062.36	25000	60	62	200	300	140	130	80	60	145	80	246	77.5	65	20	30	35	65	60	65	39	57	38	M36x160
2133.11.082	36000	80	82	250	300	160	150	100	75	105	95	305	100	90	20	30	30	60	30	60	33	48	32	M30x160

*The maximum permissible load capacity is to be calculated such that two lifting flanges one their own are capable of carrying or turning the tool.

Lifting flange with bolt with safety ring, to AUDI



2133.11.10.

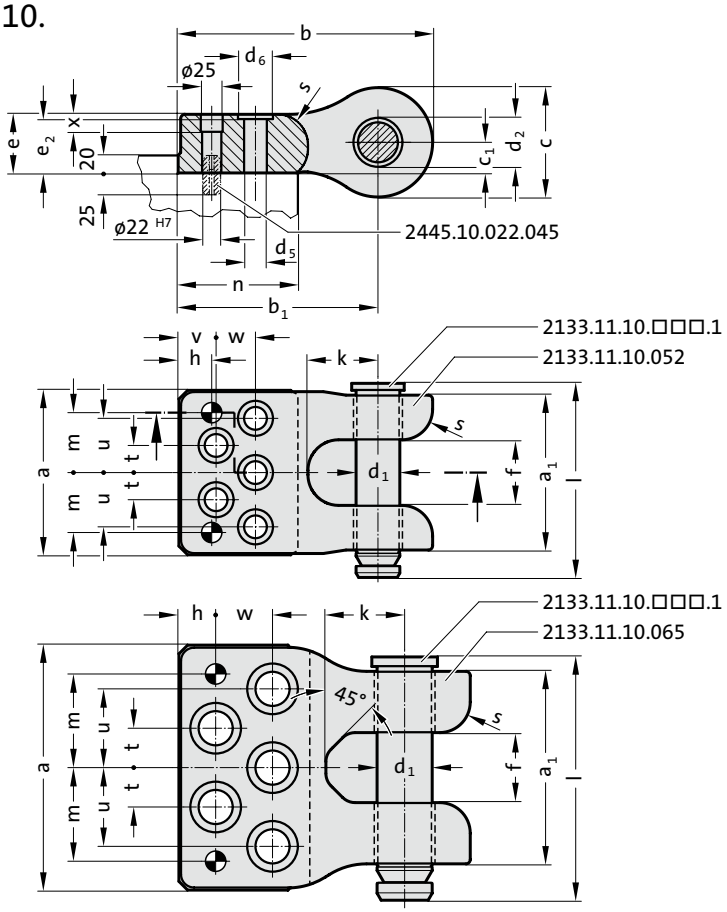

Note:

Centering pin 2445.10.022.045 to be ordered separately

Order No for spare part bolt with safety ring: 2133.11.10.□□□.1
Order No for lifting flange with bolt, with safety ring, two centering pins and fixing screws, to AUDI: 2133.11.00.10.□□□

2133.11.10. Lifting flange with bolt with safety ring, to AUDI

Order No	max. carrying capacity (2 lifting flanges) [kg]*	d_1	d_2	a	a_1	b	b_1	c	c_1	e	f	h	k	l	m	n	s	t	u	v	w	x	d_5	d_6	e_2	Socket head cap screw DIN EN ISO 4762
2133.11.10.052	16000	50	52	188	177	290	227.5	125	35	67	75	37.5	80	221	68.5	135	35	31	62	42.5	45	20	26	40	65	M24x100
2133.11.00.10.052	16000	50	52	188	177	290	227.5	125	35	67	75	37.5	80	221	68.5	135	35	31	62	42.5	45	20	26	40	65	M24x100
2133.11.10.065	25000	63	65	280	220	333	258	150	47	91	80	42	90	277	107	150	35	45	90	42	65	46	39	58	84	M36x120
2133.11.00.10.065	25000	63	65	280	220	333	258	150	47	91	80	42	90	277	107	150	35	45	90	42	65	46	39	58	84	M36x120

*The maximum permissible load capacity is to be calculated such that two lifting flanges one their own are capable of carrying or turning the tool.

Lifting flange with bolt with safety ring



2133.12.

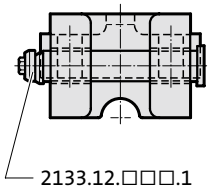

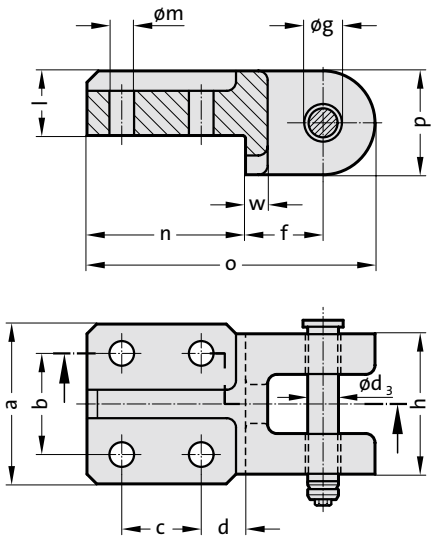

Note:

Order No for spare part bolt with safety ring: 2133.12.□□□.1

2133.12. Lifting flange with bolt with safety ring

Order No	max. carrying capacity (2 lifting flanges) [kg]*	a	b	c	d	f	g H13	h	l	m	n	o	p	w	d_3
2133.12.016	1200	80	50	40	22.5	39	16	70	32	12.5	80	145	52	11	15.6
2133.12.021	2000	90	60	40	27.5	42	21	79	36	16.5	90	160	56	13	20.6
2133.12.026	4000	100	65	65	32.5	60	26	90	50	21	120	215	70	20	25.6

*The maximum permissible load capacity is to be calculated such that two lifting flanges one their own are capable of carrying or turning the tool.

subject to alterations

Lifting flange with bolt with safety ring

2133.12.

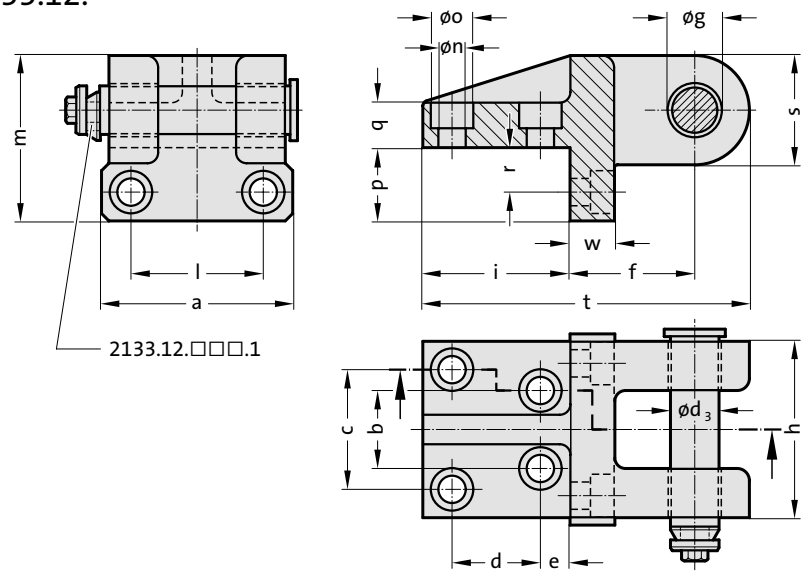



Note:

Order No for spare part bolt with safety ring: 2133.12.□□□.1

2133.12. Lifting flange with bolt with safety ring

Order No	max. carrying capacity (2 lifting flanges) [kg]*	a	b	c	d	e	f	g H13	h	i	l	m	n	o	p	q	r	s	t	w	d_3
2133.12.034	8000	135	56	84	60	20	85	34	125	100	96	111	18	28	50	30	30	72	221	30	33
2133.12.044	14000	180	80	110	70	30	100	44	160	125	130	140	22	36	60	40	35	90	270	40	43

*The maximum permissible load capacity is to be calculated such that two lifting flanges one their own are capable of carrying or turning the tool.

Lifting flange with bolt with safety ring, with feather key, to CNOMO Standard



2133.13.

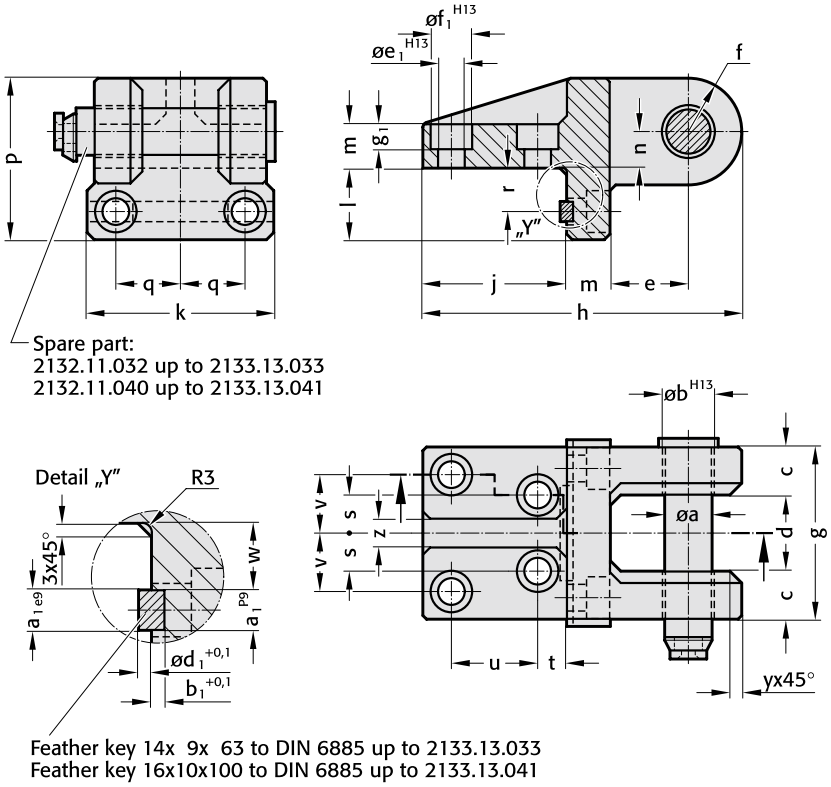

Note:

Order No for spare part bolt with safety ring:
2132.11.032 für 2133.13.033
2132.11.040 für 2133.13.041

Feather key to DIN 6885:
14x9x63 up to 2133.13.033
16x10x100 up to 2133.13.041

2133.13. Lifting flange with bolt with safety ring, with feather key, to CNOMO Standard

Order No	max. carrying capacity (2 lifting flanges) [kg]*	a	b	c	d	e	f	g	h	j	k	l	m	n	p	q	r	s	t	u	v	w	y	z	a_1	b_1	d_1	e_1	f_1	g_1
2133.13.033	8000	32	33	35	55	55	36	125	221	100	135	50	30	25	111	48	30	28	20	60	42	24	10	20	14	4.5	4.5	18	28	17
2133.13.041	12600	40	41	50	60	60	45	160	270	125	180	60	40	35	140	65	35	40	30	70	55	27	12.5	25	16	5	5	22	36	21

*The maximum permissible load capacity is to be calculated such that two lifting flanges one their own are capable of carrying or turning the tool.

subject to alterations

Lifting flange with bolt with safety ring, with feather key, to BMW

2133.15.

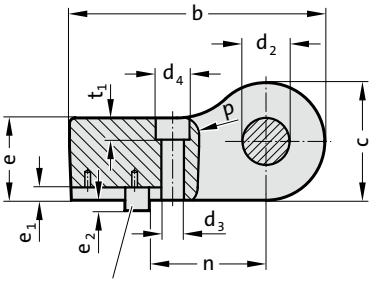

3 x 2133.15.082.300.2

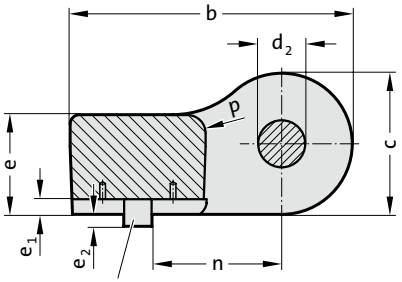

2 x 2133.15.082.345.2
1 x 2133.15.082.345.3



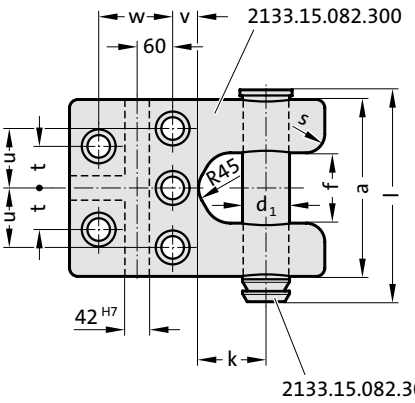

2133.15.082.300.1

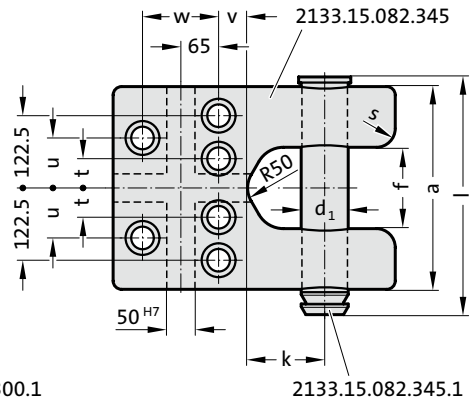

2133.15.082.345.1

Note:

Order number of spare part for bolt with safety ring:
2133.15.082.□□□.1
Order number of spare part for feather key:
3x 2133.15.082.300.2 for 2133.15.082.300
2x 2133.15.082.345.2 and 1x 2133.15.082.345.3 for 2133.15.082.345

Order number of lifting flange with bolt and feather key including mounting screws according to BMW norm:
2133.15.0.082.□□□

2133.15. Lifting flange with bolt with safety ring, with feather key, to BMW

Order No	max. carrying capacity (2 lifting flanges) [kg]*	d_1	d_2	a	b	c	e	f	k	l	n	p	s	t	u	v	w	d_3	d_4	t_1	e_1	e_2	Socket head cap screw DIN EN ISO 4762
2133.15.082.300	50000	80	82	300	435	200	140	120	115	360	199	30	30	70	100	45	125	39	58	37	21	19	M36x160
2133.15.082.345	63000	80	82	345	480	240	170	135	130	405	220	30	30	50	85	50	130	39	58	37	26	22	M36x200

*The maximum permissible load capacity is to be calculated such that two lifting flanges one their own are capable of carrying or turning the tool.

Die lifting bolt with safety ring, VDI 3366

2132.10.



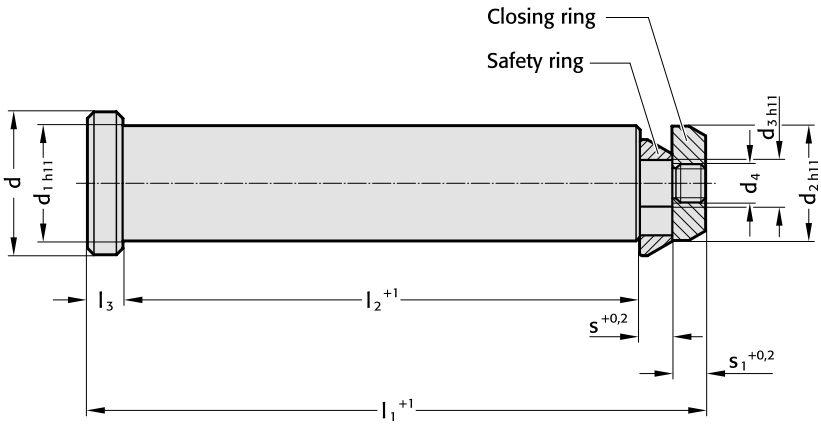

Mounting example

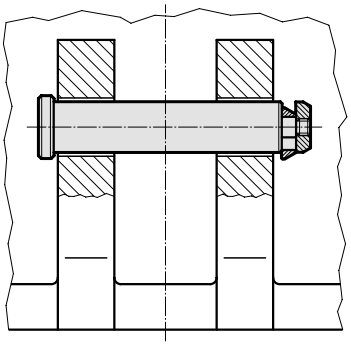

Note:

It is important to ensure that there is safety clearance on both outer sides of the cast cheeks and that there is room for installation on one side.
The Lifting bolt must always be introduced from the outside of the tool towards the middle.

2132.10. Die lifting bolt with safety ring, VDI 3366

Order No	max. carrying capacity (2 die lifting bolts) [kg]*	d	d_1	d_2	d_3	d_4	l_1	l_2	l_3	s	s_1
2132.10.032	6400	40	32	32	13	M10	175	145	10	10	10
2132.10.040	10000	50	40	40	16	M12	225	188	10	14	13
2132.10.050	16000	60	50	50	24	M20	273	230	11	16	16
2132.10.063	25000	75	63	63	30	M24	347	295	14	18	20
2132.10.076	63000	95	76	76	40	M36	422	360	15	20	27

*The maximum permissible load capacity is to be calculated such that two bolts on their own are capable of carrying or turning the tool.

Die lifting bolt with safety ring and spring, to VW standard



2132.10.55.

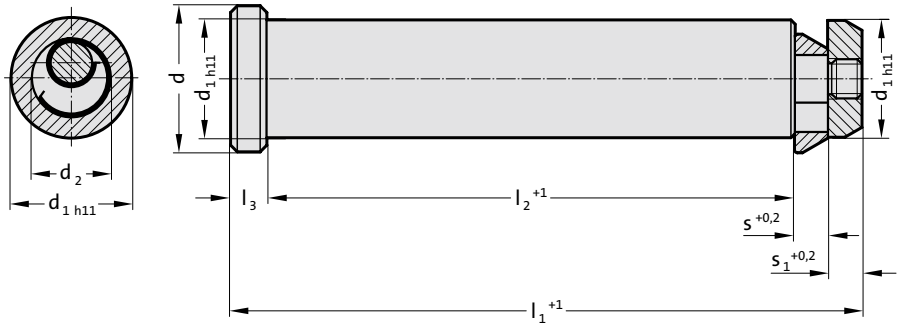

Mounting example

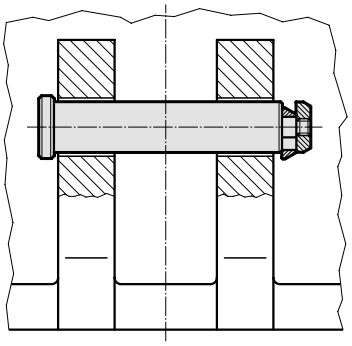

Note:

It is important to ensure that there is safety clearance on both outer sides of the cast cheeks and that there is room for installation on one side.
The Lifting bolt must always be introduced from the outside of the tool towards the middle.

2132.10.55. Die lifting bolt with safety ring and spring, to VW standard

Order No	max. carrying capacity (2 die lifting bolts) [kg]*	d	d_1	d_2	l_1	l_2	l_3	s	s_1
2132.10.55.032	6400	40	32	21	175	145	10	10	10
2132.10.55.040	10000	50	40	28	225	188	10	14	13
2132.10.55.050	16000	60	50	36	273	230	11	16	16
2132.10.55.063	25000	75	63	45	347	295	14	18	20
2132.10.55.076	63000	95	76	56	422	360	15	20	27

*The maximum permissible load capacity is to be calculated such that two bolts on their own are capable of carrying or turning the tool.

subject to alterations

Die lifting bolt with safety ring, CNOMO Standard

2132.11.

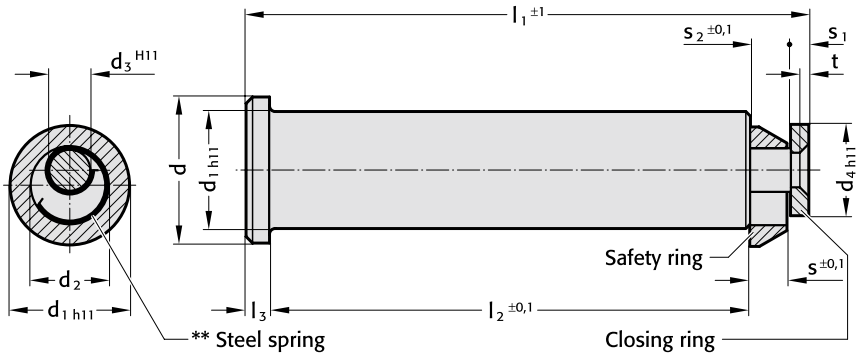



Mounting example

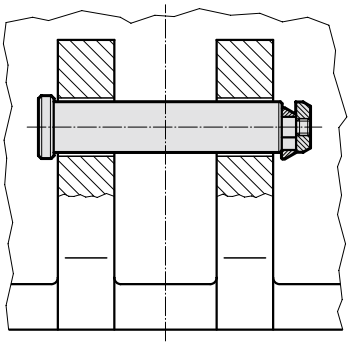

Note:

It is important to ensure that there is safety clearance on both outer sides of the cast cheeks and that there is room for installation on one side.
The lifter bolt must always be introduced from the outside of the tool towards the middle.

**Steel spring included.

2132.11. Die lifting bolt with safety ring, CNOMO Standard

Order No	max. carrying capacity (2 die lifting bolts) [kg]*	d	d_1	d_2	d_3	d_4	l_1	l_2	l_3	s	s_1	s_2	t
2132.11.032	12000	40	32	22	12	25	154	132	6	10	5	11	2.5
2132.11.040	18000	50	40	28	16	32	197.75	170	8	12.5	6	13.75	3
2132.11.050	28000	63	50	36	20	40	247.6	212	10	16	8	17.6	4
2132.11.063	45000	80	63	45	25	50	309	265	12	20	10	22	5

*The maximum permissible load capacity is to be calculated such that two bolts on their own are capable of carrying or turning the tool.

Bush for die lifting bolt



2132.10.03. .1

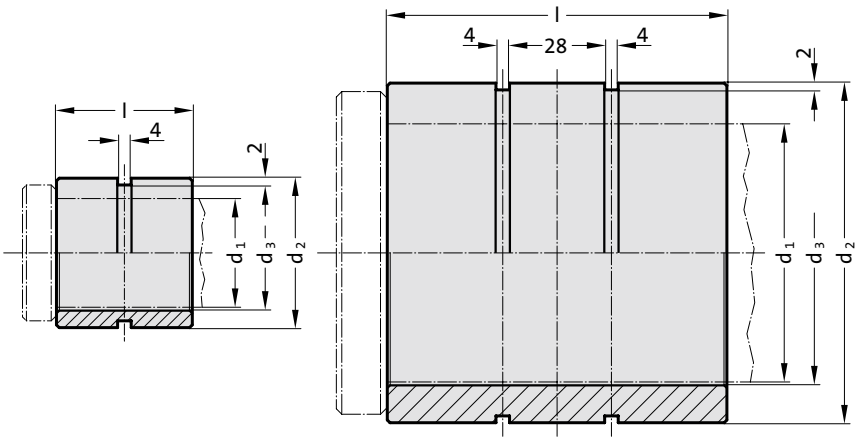

Mounting example

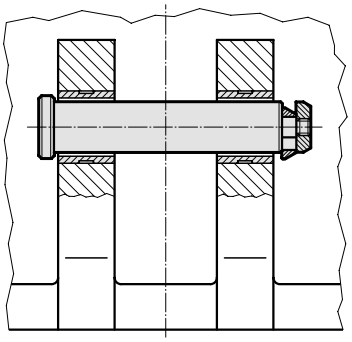

Description:

Bush for casting-in for lifting bolts 2132.10./11.

Material:

Steel

2132.10.03. .1 Bush for die lifting bolt

Order No	max. carrying capacity (2 die lifting bolts) [kg]	d_1	d_2	d_3	l	Number of grooves
2132.10.03.032.1.1	3200	32	44	34	40	1
2132.10.03.040.2.1	5000	40	52	42	50	1
2132.10.03.050.3.1	8000	50	62	52	60	1
2132.10.03.063.4.1	12000	63	75	65	80	1
2132.10.03.076.5.1	25000	76	100	78	100	2
2132.10.03.076.6.1	31500	76	105	78	100	2

Die lifting bolt with safety ring, for lifting flange 2133.12.

2133.12. .1

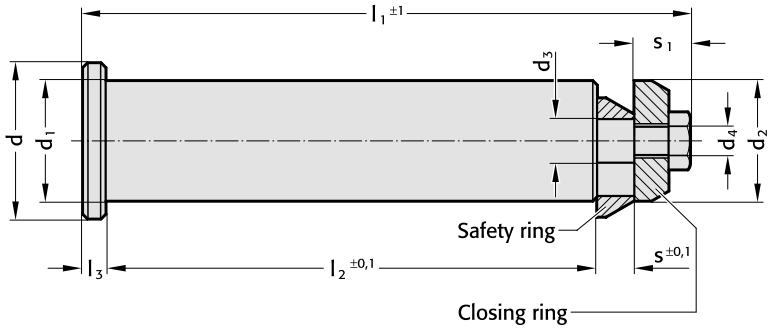



Mounting example

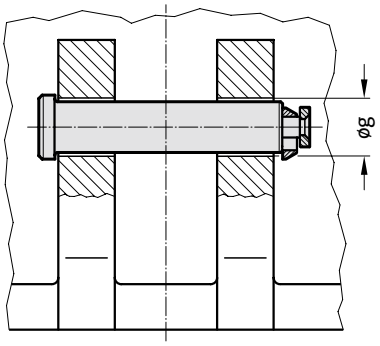

Note:

It is important to ensure that there is safety clearance on both outer sides of the cast cheeks and that there is room for installation on one side.
The lifter bolt must always be introduced from the outside of the tool towards the middle.

2133.12. .1 Die lifting bolt with safety ring, for lifting flange 2133.12.

Order No	max. carrying capacity (2 die lifting bolts) [kg]*	g	d	d_1	d_2	d_3	d_4	l_1	l_2	l_3	s	s_1
2133.12.016.1	1200	16	25	15.6	15.6	6	M5	102.5	77	6	8	11.5
2133.12.021.1	2000	21	30	20.6	20.6	7	M6	113.5	86	6	8	13.5
2133.12.026.1	4000	26	35	25.6	25.6	9	M6	128.5	100	6	9	13.5
2133.12.034.1	8000	34	43	33	33	12	M8	166.5	135	6	10	15.5
2133.12.044.1	14000	44	53	43	43	16	M12	210.5	175	8	12	20.5

*The maximum permissible load capacity is to be calculated such that two bolts on their own are capable of carrying or turning the tool.

Clamp, forked shape, DIN 6315-B
Clamping claw, goose-neck shape



2140.17.

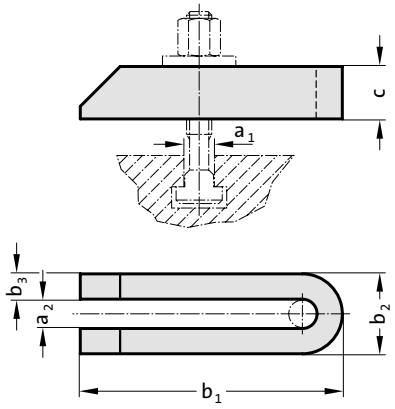

Material:
Heat-treated steel, painted

Note:
Holding and contact surfaces are plane-parallel. High clamping forces can be achieved by using high-strength screws conforming to DIN 787. The dimensions of the holding strap should be matched to the strength of the bolts.

Supplied without clamping bolts,
suitable clamping bolts: 2140.30.

2140.17. Clamp, forked shape, DIN 6315-B

Order No	a_1	a_2	b_1	b_2	b_3	c
2140.17.09.080	8	9	80	25	8	15
2140.17.11.100	10	11	100	31	10	20
2140.17.14.125	12 o. 14	14	125	38	12	25
2140.17.14.160	12 o. 14	14	160	38	12	25
2140.17.14.200	12 o. 14	14	200	38	12	25
2140.17.18.160	16 o. 18	18	160	48	15	30
2140.17.18.200	16 o. 18	18	200	48	15	30
2140.17.18.250	16 o. 18	18	250	48	15	40
2140.17.22.200	20 o. 22	22	200	52	15	40
2140.17.22.250	20 o. 22	22	250	62	20	40
2140.17.22.315	20 o. 22	22	315	62	20	40
2140.17.26.200	24	26	200	66	20	40
2140.17.26.250	24	26	250	66	20	40
2140.17.26.315	24	26	315	66	20	40

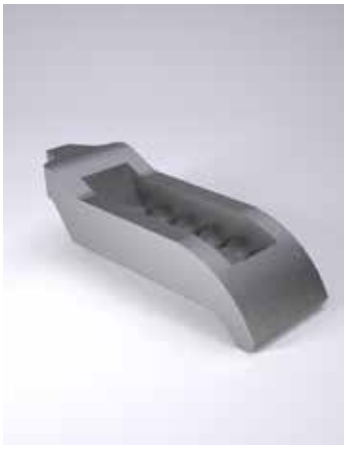

2140.15.

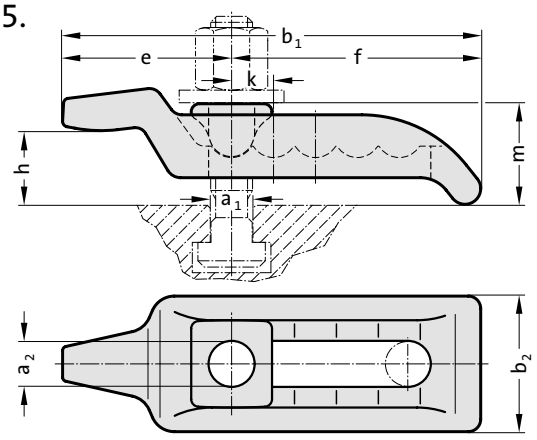

Material:
Forged and heat-treated steel,
galvanised and yellow passivated

Note:
Clamping claws quickly span very different clamping heigths without the need for additional supports and take up very little space on the machine table. They are designed for maximum loads and are particularly suitable for clamping cutting and punching tools.

Supplied without clamping bolts,
suitable clamping bolts: 2140.30.

2140.15. Clamping claw, goose-neck shape

Order No	a_1	a_2	b_1	b_2	e	f	k	m	Clamping height h
2140.15.22	20 o. 22	22	200	66	88	112	20	60	25 - 50
2140.15.26	24 o. 26	26	232	76	97	135	24	70	30 - 70
2140.15.32	36	32	263	90	107	156	28	80	40 - 75

subject to alterations

Clamping claw, infinitely variable

2140.13.

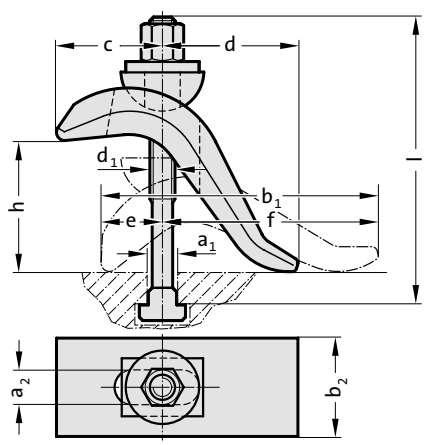



2140.13. Clamping claw, infinitely variable

Order No	a_1	a_2	b_1	b_2	c	d	e	f	h*	Clamping bolt d_1 x a_1 x l
2140.13.12.17	12	17	140	50	55	60	30	110	0 - 50	M12x12x125
2140.13.14.17	14	17	140	50	55	60	30	110	0 - 50	M12x14x125
2140.13.16.17	16	17	140	50	55	60	30	110	0 - 75	M16x16x160
2140.13.18.17	18	17	140	50	55	60	30	110	0 - 75	M16x18x160
2140.13.16.21	16	21	175	60	70	80	40	135	0 - 65	M16x16x160
2140.13.18.21	18	21	175	60	70	80	40	135	0 - 65	M16x18x160
2140.13.22.21	22	21	175	60	70	80	40	135	0 - 85	M20x22x200

*Clamping height

Material:
Steel, forged and head-treated, tempered in burnishing clay.

Note:
Clamping claws quickly span very different clamping heigths without the need for additional supports and take up very little space on the machine table. They are designed for maximum loads and are particularly suitable for clamping cutting and punching tools.

Supplied without clamping bolts,
suitable clamping bolts: 2140.30.

2140.14.

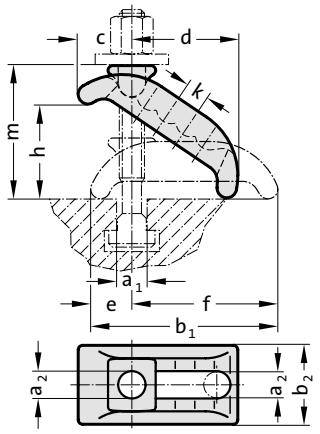



2140.14. Clamping claw, infinitely variable

Order No	a_1	a_2	b_1	b_2	c	d	e	f	k	m	h_{max}
2140.14.13	12 o. 14	13	88	38	28	48	23	68	14	52	35
2140.14.18	16 o. 18	18	130	56	38	74	29	101	18	80	55
2140.14.22	20 o. 22	22	140	66	46	80	32	112	20	98	65
2140.14.26	24 o. 28	26	174	76	52	100	39	135	24	110	75
2140.14.32	36	32	200	90	61	110	44	156	28	118	80

Material:
Forged and heat-treated steel,
galvanised and yellow passivated

Note:
Clamping claws quickly span very different clamping heigths without the need for additional supports and take up very little space on the machine table. They are designed for maximum loads and are particularly suitable for clamping cutting and punching tools.

Supplied without clamping bolts,
suitable clamping bolts: 2140.30.

Clamp, straight, DIN 6314
Clamp, straight, with setscrew



2140.16.

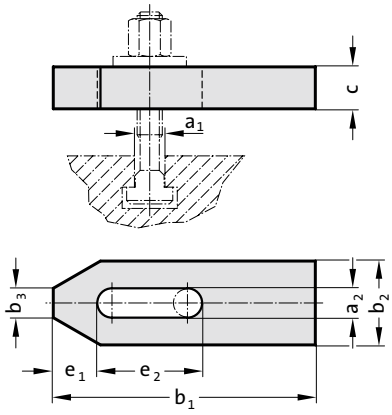

Material:
Heat-treated steel, painted

Note:
Holding and contact surfaces are plane-parallel. High clamping forces can be achieved by using high-strength screws conforming to DIN 787. The dimensions of the holding strap should be matched to the strength of the bolts.

Supplied without clamping bolts,
suitable clamping bolts: 2140.30.

2140.16.26.250: c = 35 mm, does not conform to DIN

2140.16. Clamp, straight, DIN 6314

Order No	a_1	a_2	b_1	b_2	b_3	c	e_1	e_2
2140.16.09.060	8	9	60	25	10	12	13	22
2140.16.11.080	10	11	80	30	12	15	15	30
2140.16.14.100	12 o. 14	14	100	40	14	20	21	40
2140.16.14.125	12 o. 14	14	125	40	14	20	21	50
2140.16.18.125	16 o. 18	18	125	50	18	25	26	45
2140.16.18.160	16 o. 18	18	160	50	18	25	26	65
2140.16.22.160	20 o. 22	22	160	60	22	30	30	60
2140.16.22.200	20 o. 22	22	200	60	22	30	30	80
2140.16.26.200	24	26	200	70	26	30	35	80
2140.16.26.250	24	26	250	70	26	35	35	105



2140.10.

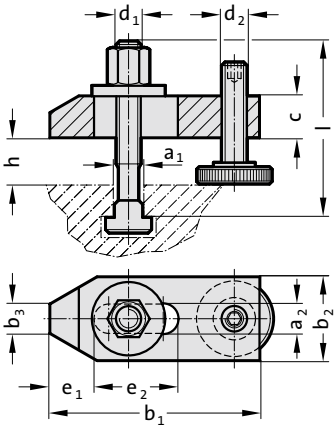

Material:
Heat-treated steel, painted.

Note:
Supplied with clamping bolts and setscrews for T grooves conforming to DIN 787 8.8 with nuts and washers.

2140.10. Clamp, straight, with setscrew

Order No	a_1	a_2	b_1	b_2	b_3	c	$d_{1,2}$	e_1	e_2	h*	Clamping bolt d_1 x a_1 x l
2140.10.10	10	11	80	30	12	15	M10	15	30	8 - 32	M10x10x80
2140.10.12	12	14	100	40	14	20	M12	21	40	10 - 40	M12x12x100
2140.10.14	14	14	100	40	14	20	M12	21	40	10 - 38	M12x14x100
2140.10.16	16	18	125	50	18	25	M16	26	45	13 - 49	M16x16x125
2140.10.18	18	18	125	50	18	25	M16	26	45	13 - 46	M16x18x125
2140.10.20	20	22	160	60	22	30	M20	30	60	16 - 65	M20x20x160
2140.10.22	22	22	160	60	22	30	M20	30	60	16 - 65	M20x22x160

*Clamping height depends on the groove depth

subject to alterations

Clamp, goose neck shape, DIN 6316
Clamp, goose neck shape, with setscrew

2140.18.

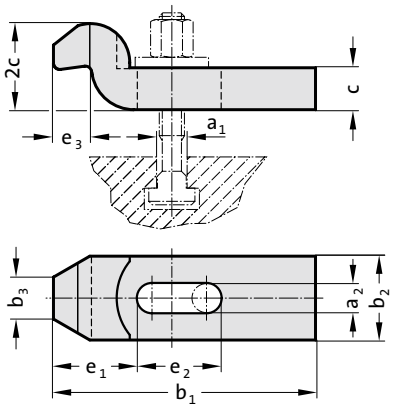



2140.18. Clamp, goose neck shape, DIN 6316

Order No	a_1	a_2	b_1	b_2	b_3	c	e_1	e_2	e_3
2140.18.09.080	8	9	80	25	12	12	25	25	9
2140.18.11.100	10	11	100	30	15	15	32	32	12
2140.18.14.125	12 o. 14	14	125	40	20	20	40	40	16
2140.18.18.125	16 o. 18	18	125	50	25	25	49	40	20
2140.18.18.160	16 o. 18	18	160	50	25	25	49	50	20
2140.18.22.160	20 o. 22	22	160	60	30	30	55	55	24
2140.18.22.200	20 o. 22	22	200	60	30	30	55	70	24
2140.18.26.200	24	26	200	70	35	30	72	60	28
2140.18.26.250	24	26	250	70	35	35	72	80	28

Material:
Heat-treated steel, painted

Note:
Holding and contact surfaces are plane-parallel. High clamping forces can be achieved by using high-strength screws conforming to DIN 787. The dimensions of the holding strap should be matched to the strength of the bolts.

Supplied without clamping bolts,
suitable clamping bolts: 2140.30.

2140.18.26.250: c = 35 mm, does not conform to DIN

2140.11.

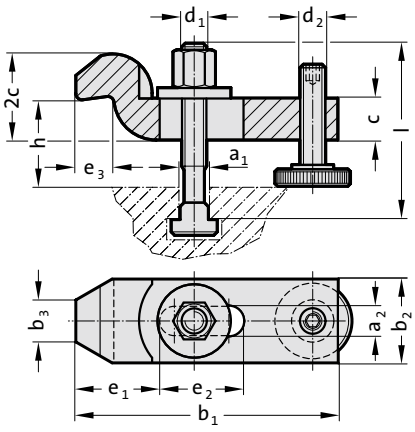



2140.11. Clamp, goose neck shape, with setscrew

Order No	a_1	a_2	b_1	b_2	b_3,c	$d_{1,2}$	e_1	e_2	e_3	h*	Clamping bolt d_1 x a_1 x l
2140.11.10	10	11	100	30	15	M10	32	32	12	22 - 46	M10x10x80
2140.11.12	12	14	125	40	20	M12	40	40	16	28 - 58	M12x12x100
2140.11.14	14	14	125	40	20	M12	40	40	16	28 - 56	M12x14x100
2140.11.16	16	18	160	50	25	M16	49	50	20	36 - 72	M16x16x125
2140.11.18	18	18	160	50	25	M16	49	50	20	36 - 69	M16x18x125
2140.11.20	20	22	200	60	30	M20	55	70	24	43 - 92	M20x20x160
2140.11.22	22	22	200	60	30	M20	55	70	24	43 - 92	M20x22x160

*Clamping height depends on the groove depth

Material:
Heat-treated steel, painted.

Note:
Supplied with clamping bolts and setscrews for T grooves conforming to DIN 787 8.8 with nuts and washers.

Support, adjustable
Stepped Block DIN 6318



2140.20.

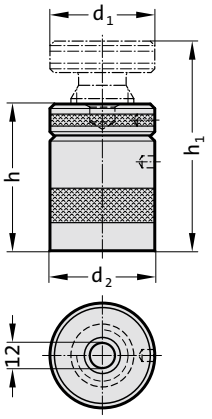

Material:
Heat-treated steel, painted

Note:
Centring hole diameter 12 mm. Spindle with self-locking trapezoidal thread and end lock.

2140.20. Support, adjustable

Order No	h	h_1	d_1	d_2	F_{max} [daN]
2140.20.042	42	52	50	50	6000
2140.20.050	50	70	50	50	6000
2140.20.070	70	100	50	50	6000
2140.20.100	100	140	65	70	10000
2140.20.140	140	210	70	80	17000
2140.20.190	190	300	80	100	35000



2140.19.

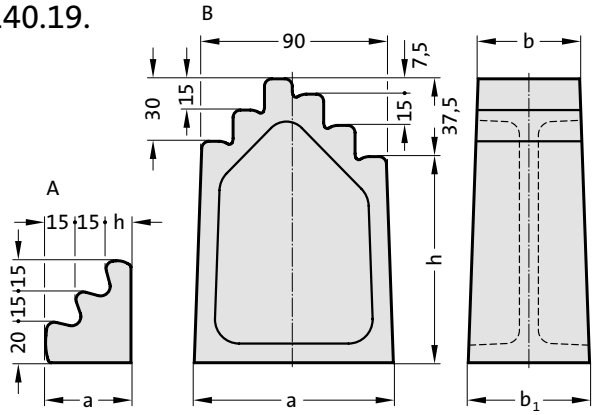

Material:
Engineering cast iron, painted.

Note:
Holding and contact surfaces are plane-parallel. High clamping forces can be achieved by using high-strength screws conforming to DIN 787. The dimensions of the holding strap should be matched to the strength of the bolts.

2140.19. Stepped Block DIN 6318

Order No	Size = h +37,5	a	b	b_1	h	Shape
2140.19.050.050	50	42.5	50	50	12.5	A
2140.19.095.050	95	95	50	55	57.5	B
2140.19.140.050	140	100	50	60	102.5	B
2140.19.185.050	185	105	50	65	147.5	B
2140.19.230.050	230	110	50	70	192.5	B
2140.19.275.050	275	115	50	75	237.5	B
2140.19.050.080	50	42.5	80	80	12.5	A
2140.19.095.080	95	95	80	85	57.5	B
2140.19.140.080	140	100	80	90	102.5	B

subject to alterations

Set screw
Hexagon Nut DIN 6330 B

2140.02.

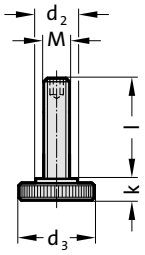



2140.02. Set screw

Order No	M	d_2	d_3	k	l
2140.02.10	M10	16	30	8	39
2140.02.12	M12	20	36	10	48
2140.02.16	M16	25	42	13	55
2140.02.20	M20	25	50	16	69
2140.02.24	M24	34	60	20	87

Material:
heat-treated, strength class 8.8

2140.32.

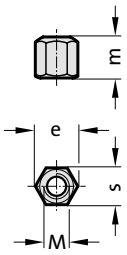



2140.32. Hexagon Nut DIN 6330 B

Order No	M	e	m	s
2140.32.08	M8	15	12	13
2140.32.10	M10	18.4	15	16
2140.32.12	M12	20.7	18	18
2140.32.14	M14	24.2	21	21
2140.32.16	M16	27.7	24	24
2140.32.18	M18	31.2	27	27
2140.32.20	M20	34.6	30	30
2140.32.22	M22	39.2	33	34
2140.32.24	M24	41.5	36	36
2140.32.30	M30	53.1	45	46

Material:
heat-treated, strength class 10.9

Note:
Use washers conforming to DIN 6340.

Hexagon nut with collar, DIN 6331
Washer DIN 6340



2140.33.

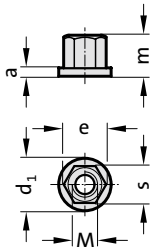

Material:
heat-treated, strength class 10.9

Execution:
turned and milled

Note:
Thread length 1,5 x M

2140.33. Hexagon nut with collar, DIN 6331

Order No	M	a	d_1	e	m	s
2140.33.08	M8	3.5	18	15	12	13
2140.33.10	M10	4	22	18.4	15	16
2140.33.12	M12	4	25	20.7	18	18
2140.33.14	M14	4.5	28	24.2	21	21
2140.33.16	M16	5	31	27.7	24	24
2140.33.18	M18	5	34	31.2	27	27
2140.33.20	M20	6	37	34.6	30	30
2140.33.22	M22	6	40	39.2	33	34
2140.33.24	M24	6	45	41.5	36	36
2140.33.30	M30	6	58	53.1	45	46



2140.34.

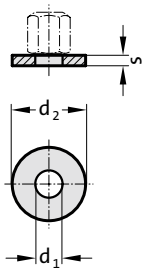

Material:
heat-treated, strength 1200–1400 N/mm²

2140.34. Washer DIN 6340

Order No	M	d_1	d_2	s
2140.34.08	M8	8.4	23	4
2140.34.10	M10	10.5	28	4
2140.34.12	M12	13	35	5
2140.34.14	M14	15	40	5
2140.34.16	M16	17	45	6
2140.34.18	M18	19	45	6
2140.34.20	M20	21	50	6
2140.34.22	M22	23	50	8
2140.34.24	M24	25	60	8
2140.34.30	M30	31	68	10

subject to alterations

Screw for T-slot, DIN 787

2140.30.

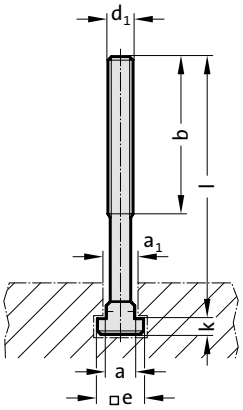



Material:
heat-treated,
M 8 – M12 to strength class 10.9
M14 – M30 to strength class 8.8

Execution:
forged, thread rolled, T-slot milled

2140.30. Screw for T-slot, DIN 787

Order No	a_1	a	b	d_1	e	k	l	Order No	a_1	a	b	d_1	e	k	l
2140.30.08.08.032	8	7.7	22	M8	13	6	32	2140.30.20.20.100	20	19.7	65	M20	32	12	100
2140.30.08.08.050	8	7.7	35	M8	13	6	50	2140.30.20.20.125	20	19.7	85	M20	32	12	125
2140.30.08.08.080	8	7.7	50	M8	13	6	80	2140.30.20.20.160	20	19.7	110	M20	32	12	160
2140.30.10.10.040	10	9.7	30	M10	15	6	40	2140.30.20.20.200	20	19.7	125	M20	32	12	200
2140.30.10.10.063	10	9.7	45	M10	15	6	63	2140.30.20.20.250	20	19.7	150	M20	32	12	250
2140.30.10.10.100	10	9.7	60	M10	15	6	100	2140.30.20.20.315	20	19.7	190	M20	32	12	315
2140.30.12.12.050	12	11.7	35	M12	18	7	50	2140.30.20.22.080	22	21.7	55	M20	35	14	80
2140.30.12.12.063	12	11.7	40	M12	18	7	63	2140.30.20.22.100	22	21.7	65	M20	35	14	100
2140.30.12.12.080	12	11.7	55	M12	18	7	80	2140.30.20.22.125	22	21.7	85	M20	35	14	125
2140.30.12.12.125	12	11.7	75	M12	18	7	125	2140.30.20.22.160	22	21.7	110	M20	35	14	160
2140.30.12.12.200	12	11.7	120	M12	18	7	200	2140.30.20.22.200	22	21.7	125	M20	35	14	200
2140.30.12.14.050	14	13.7	35	M12	22	8	50	2140.30.20.22.250	22	21.7	150	M20	35	14	250
2140.30.12.14.063	14	13.7	45	M12	22	8	63	2140.30.20.22.315	22	21.7	190	M20	35	14	315
2140.30.12.14.080	14	13.7	55	M12	22	8	80	2140.30.24.24.100	24	23.7	70	M24	40	16	100
2140.30.12.14.125	14	13.7	75	M12	22	8	125	2140.30.24.24.125	24	23.7	85	M24	40	16	125
2140.30.12.14.200	14	13.7	120	M12	22	8	200	2140.30.24.24.160	24	23.7	110	M24	40	16	160
2140.30.14.16.063	16	15.7	45	M14	25	9	63	2140.30.24.24.200	24	23.7	125	M24	40	16	200
2140.30.14.16.100	16	15.7	65	M14	25	9	100	2140.30.24.24.250	24	23.7	150	M24	40	16	250
2140.30.14.16.160	16	15.7	125	M14	25	9	160	2140.30.24.24.315	24	23.7	190	M24	40	16	315
2140.30.14.16.250	16	15.7	150	M14	25	9	250	2140.30.24.24.400	24	23.7	240	M24	40	16	400
2140.30.16.16.063	16	15.7	45	M16	25	9	63	2140.30.24.28.100	28	27.7	70	M24	44	18	100
2140.30.16.16.080	16	15.7	55	M16	25	9	80	2140.30.24.28.125	28	27.7	85	M24	44	18	125
2140.30.16.16.100	16	15.7	65	M16	25	9	100	2140.30.24.28.160	28	27.7	110	M24	44	18	160
2140.30.16.16.160	16	15.7	100	M16	25	9	160	2140.30.24.28.200	28	27.7	125	M24	44	18	200
2140.30.16.16.200	16	15.7	125	M16	25	9	200	2140.30.24.28.250	28	27.7	150	M24	44	18	250
2140.30.16.16.250	16	15.7	150	M16	25	9	250	2140.30.24.28.315	28	27.7	190	M24	44	18	315
2140.30.16.18.063	18	17.7	45	M16	28	10	63	2140.30.24.28.400	28	27.7	240	M24	44	18	400
2140.30.16.18.080	18	17.7	55	M16	28	10	80	2140.30.30.36.125	36	35.6	80	M30	54	22	125
2140.30.16.18.100	18	17.7	65	M16	28	10	100	2140.30.30.36.160	36	35.6	110	M30	54	22	160
2140.30.16.18.160	18	17.7	100	M16	28	10	160	2140.30.30.36.200	36	35.6	135	M30	54	22	200
2140.30.16.18.200	18	17.7	125	M16	28	10	200	2140.30.30.36.250	36	35.6	150	M30	54	22	250
2140.30.16.18.250	18	17.7	150	M16	28	10	250	2140.30.30.36.315	36	35.6	200	M30	54	22	315
2140.30.20.20.080	20	19.7	55	M20	32	12	80	2140.30.30.36.500	36	35.6	300	M30	54	22	500

Hexagon socket head cap screw, DIN EN ISO 4762 - Strength class 8.8



2192.10.

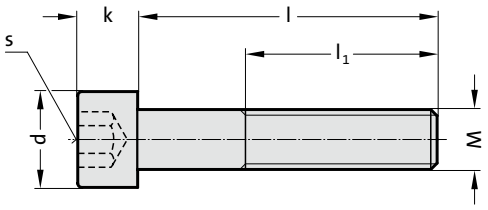

2192.10. Hexagon socket head cap screw, DIN EN ISO 4762 - Strength class 8.8

Order No	M	l	l_1	d	k	s	Order No	M	l	l_1	d	k	s
2192.10.04.012	M4	12	10	7	4	3	2192.10.10.050	M10	50	32	16	10	8
2192.10.04.016	M4	16	14	7	4	3	2192.10.10.060	M10	60	32	16	10	8
2192.10.04.020	M4	20	18	7	4	3	2192.10.12.025	M12	25	20	18	12	10
2192.10.04.025	M4	25	23	7	4	3	2192.10.12.030	M12	30	25	18	12	10
2192.10.05.020	M5	20	18	8.5	5	4	2192.10.12.035	M12	35	30	18	12	10
2192.10.05.025	M5	25	23	8.5	5	4	2192.10.12.040	M12	40	35	18	12	10
2192.10.05.030	M5	30	22	8.5	5	4	2192.10.12.045	M12	45	40	18	12	10
2192.10.06.016	M6	16	13	10	6	5	2192.10.12.050	M12	50	45	18	12	10
2192.10.06.020	M6	20	17	10	6	5	2192.10.12.070	M12	70	36	18	12	10
2192.10.06.025	M6	25	22	10	6	5	2192.10.12.080	M12	80	36	18	12	10
2192.10.06.030	M6	30	27	10	6	5	2192.10.16.030	M16	30	24	24	16	14
2192.10.06.035	M6	35	24	10	6	5	2192.10.16.035	M16	35	29	24	16	14
2192.10.06.040	M6	40	24	10	6	5	2192.10.16.040	M16	40	34	24	16	14
2192.10.06.045	M6	45	24	10	6	5	2192.10.16.045	M16	45	39	24	16	14
2192.10.06.050	M6	50	24	10	6	5	2192.10.16.050	M16	50	44	24	16	14
2192.10.06.055	M6	55	24	10	6	5	2192.10.16.055	M16	55	49	24	16	14
2192.10.06.060	M6	60	24	10	6	5	2192.10.16.060	M16	60	54	24	16	14
2192.10.06.070	M6	70	24	10	6	5	2192.10.16.100	M16	100	44	24	16	14
2192.10.06.080	M6	80	24	10	6	5	2192.10.20.050	M20	50	42	30	20	17
2192.10.06.090	M6	90	24	10	6	5	2192.10.20.060	M20	60	52	30	20	17
2192.10.08.016	M8	16	12	13	8	6	2192.10.20.070	M20	70	62	30	20	17
2192.10.08.020	M8	20	16	13	8	6	2192.10.20.090	M20	90	52	30	20	17
2192.10.08.025	M8	25	21	13	8	6	2192.10.20.120	M20	120	52	30	20	17
2192.10.08.030	M8	30	26	13	8	6	2192.10.24.060	M24	60	51	36	24	19
2192.10.08.035	M8	35	31	13	8	6	2192.10.24.070	M24	70	61	36	24	19
2192.10.08.040	M8	40	28	13	8	6	2192.10.24.080	M24	80	71	36	24	19
2192.10.08.045	M8	45	28	13	8	6	2192.10.24.100	M24	100	60	36	24	19
2192.10.08.050	M8	50	28	13	8	6	2192.10.24.120	M24	120	60	36	24	19
2192.10.08.060	M8	60	28	13	8	6	2192.10.24.140	M24	140	60	36	24	19
2192.10.10.016	M10	16	11	16	10	8	2192.10.30.140	M30	140	72	45	30	22
2192.10.10.020	M10	20	15	16	10	8	2192.10.36.120	M36	120	84	54	36	27
2192.10.10.025	M10	25	20	16	10	8	2192.10.36.160	M36	160	84	54	36	27
2192.10.10.030	M10	30	25	16	10	8	2192.10.36.180	M36	180	84	54	36	27
2192.10.10.035	M10	35	30	16	10	8	2192.10.36.200	M36	200	84	54	36	27
2192.10.10.040	M10	40	35	16	10	8							

Hexagon socket head cap screw, DIN EN ISO 4762 - Strength class 12.9

2192.12.

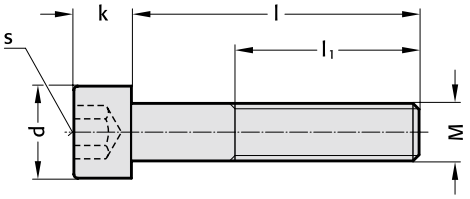



2192.12. Hexagon socket head cap screw, DIN EN ISO 4762 - Strength class 12.9

Order No	M	l	l_1	d	k	s
2192.12.03.008	M3	8	6	5.5	3	2.5
2192.12.04.010	M4	10	8	7	4	3
2192.12.06.010	M6	10	7	10	6	5
2192.12.06.020	M6	20	17	10	6	5
2192.12.06.025	M6	25	22	10	6	5
2192.12.06.030	M6	30	27	10	6	5
2192.12.06.035	M6	35	24	10	6	5
2192.12.06.040	M6	40	24	10	6	5
2192.12.06.045	M6	45	24	10	6	5
2192.12.06.050	M6	50	24	10	6	5
2192.12.06.055	M6	55	24	10	6	5
2192.12.06.060	M6	60	24	10	6	5
2192.12.06.070	M6	70	24	10	6	5
2192.12.06.080	M6	80	24	10	6	5
2192.12.06.085	M6	85	24	10	6	5
2192.12.06.090	M6	90	24	10	6	5
2192.12.06.100	M6	100	24	10	6	5
2192.12.06.160	M6	160	24	10	6	5
2192.12.06.200	M6	200	24	10	6	5
2192.12.08.016	M8	16	12	13	8	6
2192.12.08.030	M8	30	26	13	8	6
2192.12.08.035	M8	35	31	13	8	6
2192.12.08.040	M8	40	28	13	8	6
2192.12.08.045	M8	45	28	13	8	6
2192.12.08.050	M8	50	28	13	8	6
2192.12.08.055	M8	55	28	13	8	6
2192.12.08.060	M8	60	28	13	8	6
2192.12.08.070	M8	70	28	13	8	6
2192.12.08.075	M8	75	28	13	8	6
2192.12.08.080	M8	80	28	13	8	6
2192.12.08.090	M8	90	28	13	8	6
2192.12.08.100	M8	100	28	13	8	6
2192.12.08.110	M8	110	28	13	8	6
2192.12.08.120	M8	120	28	13	8	6
2192.12.10.030	M10	30	25	16	10	8
2192.12.10.035	M10	35	30	16	10	8
2192.12.10.040	M10	40	35	16	10	8
2192.12.10.045	M10	45	32	16	10	8
2192.12.10.050	M10	50	32	16	10	8
2192.12.10.055	M10	55	32	16	10	8
2192.12.10.060	M10	60	32	16	10	8
2192.12.10.065	M10	65	32	16	10	8
2192.12.10.070	M10	70	32	16	10	8
2192.12.10.075	M10	75	32	16	10	8
2192.12.10.080	M10	80	32	16	10	8
2192.12.10.090	M10	90	32	16	10	8
2192.12.10.100	M10	100	32	16	10	8
2192.12.10.110	M10	110	32	16	10	8
2192.12.10.120	M10	120	32	16	10	8
2192.12.10.130	M10	130	32	16	10	8
2192.12.10.150	M10	150	32	16	10	8
2192.12.10.180	M10	180	32	16	10	8
2192.12.10.220	M10	220	32	16	10	8
2192.12.12.040	M12	40	35	18	12	10
2192.12.12.045	M12	45	40	18	12	10
2192.12.12.050	M12	50	45	18	12	10
2192.12.12.055	M12	55	36	18	12	10
2192.12.12.060	M12	60	36	18	12	10
2192.12.12.070	M12	70	36	18	12	10
2192.12.12.080	M12	80	36	18	12	10
2192.12.12.090	M12	90	36	18	12	10
2192.12.12.100	M12	100	36	18	12	10
2192.12.12.110	M12	110	36	18	12	10
2192.12.12.120	M12	120	36	18	12	10
2192.12.12.130	M12	130	36	18	12	10
2192.12.12.140	M12	140	36	18	12	10
2192.12.12.150	M12	150	36	18	12	10
2192.12.12.180	M12	180	36	18	12	10
2192.12.12.220	M12	220	36	18	12	10
2192.12.16.040	M16	40	34	24	16	14
2192.12.16.050	M16	50	44	24	16	14
2192.12.16.060	M16	60	54	24	16	14
2192.12.16.065	M16	65	44	24	16	14
2192.12.16.070	M16	70	44	24	16	14
2192.12.16.080	M16	80	44	24	16	14
2192.12.16.090	M16	90	44	24	16	14
2192.12.16.100	M16	100	44	24	16	14
2192.12.16.110	M16	110	44	24	16	14
2192.12.16.120	M16	120	44	24	16	14
2192.12.16.130	M16	130	44	24	16	14
2192.12.16.140	M16	140	44	24	16	14
2192.12.16.150	M16	150	44	24	16	14
2192.12.16.160	M16	160	44	24	16	14
2192.12.16.180	M16	180	44	24	16	14
2192.12.16.200	M16	200	44	24	16	14
2192.12.16.220	M16	220	44	24	16	14
2192.12.16.240	M16	240	44	24	16	14
2192.12.16.260	M16	260	44	24	16	14
2192.12.16.280	M16	280	44	24	16	14
2192.12.16.300	M16	300	44	24	16	14
2192.12.20.100	M20	100	52	30	20	17
2192.12.20.110	M20	110	52	30	20	17
2192.12.20.120	M20	120	52	30	20	17
2192.12.20.130	M20	130	52	30	20	17
2192.12.20.140	M20	140	52	30	20	17
2192.12.20.150	M20	150	52	30	20	17
2192.12.20.160	M20	160	52	30	20	17
2192.12.20.180	M20	180	52	30	20	17
2192.12.20.190	M20	190	52	30	20	17
2192.12.20.200	M20	200	52	30	20	17
2192.12.20.220	M20	220	52	30	20	17
2192.12.20.230	M20	230	52	30	20	17
2192.12.20.240	M20	240	52	30	20	17
2192.12.20.260	M20	260	52	30	20	17
2192.12.20.280	M20	280	52	30	20	17
2192.12.20.300	M20	300	52	30	20	17
2192.12.24.120	M24	120	60	36	24	19
2192.12.24.130	M24	130	60	36	24	19
2192.12.24.140	M24	140	60	36	24	19
2192.12.24.150	M24	150	60	36	24	19
2192.12.24.160	M24	160	60	36	24	19
2192.12.24.180	M24	180	60	36	24	19
2192.12.24.200	M24	200	60	36	24	19
2192.12.30.140	M30	140	72	45	30	22
2192.12.30.160	M30	160	72	45	30	22

Hexagon socket head cap screw, with low profile head and key guide, DIN 6912 - Strength class 8.8



2192.20.

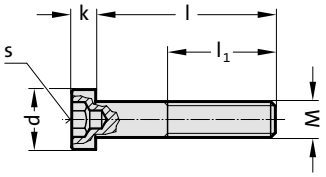

2192.20. Hexagon socket head cap screw, with low profile head and key guide, DIN 6912 - Strength class 8.8

Order No	M	l	l_1	d	k	s
2192.20.04.008	M4	8	6	7	2.8	3
2192.20.04.010	M4	10	8	7	2.8	3
2192.20.04.012	M4	12	10	7	2.8	3
2192.20.04.016	M4	16	14	7	2.8	3
2192.20.04.020	M4	20	14	7	2.8	3
2192.20.04.025	M4	25	14	7	2.8	3
2192.20.04.030	M4	30	14	7	2.8	3
2192.20.04.035	M4	35	14	7	2.8	3
2192.20.04.040	M4	40	14	7	2.8	3
2192.20.05.008	M5	8	5.4	8.5	3.5	4
2192.20.05.010	M5	10	7.4	8.5	3.5	4
2192.20.05.012	M5	12	9.4	8.5	3.5	4
2192.20.05.020	M5	20	17.4	8.5	3.5	4
2192.20.05.025	M5	25	16	8.5	3.5	4
2192.20.05.030	M5	30	16	8.5	3.5	4
2192.20.05.035	M5	35	16	8.5	3.5	4
2192.20.05.040	M5	40	16	8.5	3.5	4
2192.20.06.008	M6	8	4.3	10	4	5
2192.20.06.010	M6	10	6.3	10	4	5
2192.20.06.012	M6	12	8.3	10	4	5
2192.20.06.016	M6	16	12.3	10	4	5
2192.20.06.018	M6	18	14.3	10	4	5
2192.20.06.020	M6	20	16.3	10	4	5
2192.20.06.025	M6	25	21.3	10	4	5

Order No	M	l	l_1	d	k	s
2192.20.06.030	M6	30	18	10	4	5
2192.20.06.035	M6	35	18	10	4	5
2192.20.06.040	M6	40	18	10	4	5
2192.20.06.045	M6	45	18	10	4	5
2192.20.06.050	M6	50	18	10	4	5
2192.20.08.012	M8	12	7.3	13	5	6
2192.20.08.016	M8	16	11.3	13	5	6
2192.20.08.018	M8	18	13.3	13	5	6
2192.20.08.020	M8	20	15.3	13	5	6
2192.20.08.025	M8	25	20.3	13	5	6
2192.20.08.030	M8	30	22	13	5	6
2192.20.08.035	M8	35	22	13	5	6
2192.20.08.040	M8	40	22	13	5	6
2192.20.08.045	M8	45	22	13	5	6
2192.20.08.050	M8	50	22	13	5	6
2192.20.08.060	M8	60	22	13	5	6
2192.20.10.020	M10	20	14.5	16	6.5	8
2192.20.10.025	M10	25	19.5	16	6.5	8
2192.20.10.030	M10	30	25.5	16	6.5	8
2192.20.10.060	M10	60	26	16	6.5	8
2192.20.10.080	M10	80	26	16	6.5	8
2192.20.10.090	M10	90	26	16	6.5	8
2192.20.12.030	M12	30	20	18	7.5	10
2192.20.12.035	M12	35	25	18	7.5	10

subject to alterations

Socket head cap screw, with low profile head, DIN 7984 - Strength class 8.8

2192.40.

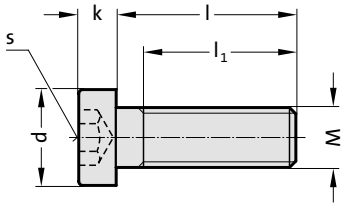



2192.40. Socket head cap screw, with low profile head, DIN 7984 - Strength class 8.8

Order No	M	l	l_1	d	k	s
2192.40.04.008	M4	8	5.9	7	2.8	2.5
2192.40.04.010	M4	10	7.9	7	2.8	2.5
2192.40.04.012	M4	12	9.9	7	2.8	2.5
2192.40.04.016	M4	16	13.9	7	2.8	2.5
2192.40.04.020	M4	20	17.9	7	2.8	2.5
2192.40.04.025	M4	25	14	7	2.8	2.5
2192.40.04.030	M4	30	14	7	2.8	2.5
2192.40.04.035	M4	35	14	7	2.8	2.5
2192.40.04.040	M4	40	14	7	2.8	2.5
2192.40.05.008	M5	8	0	8.5	3.5	3
2192.40.05.010	M5	10	7.6	8.5	3.5	3
2192.40.05.012	M5	12	9.6	8.5	3.5	3
2192.40.05.016	M5	16	13.6	8.5	3.5	3
2192.40.05.020	M5	20	17.6	8.5	3.5	3
2192.40.05.025	M5	25	22.6	8.5	3.5	3
2192.40.05.030	M5	30	16	8.5	3.5	3
2192.40.05.035	M5	35	16	8.5	3.5	3
2192.40.05.040	M5	40	16	8.5	3.5	3
2192.40.06.010	M6	10	7	10	4	4
2192.40.06.012	M6	12	9	10	4	4
2192.40.06.016	M6	16	13	10	4	4
2192.40.06.020	M6	20	17	10	4	4

Order No	M	l	l_1	d	k	s
2192.40.06.025	M6	25	22	10	4	4
2192.40.06.030	M6	30	18	10	4	4
2192.40.06.035	M6	35	18	10	4	4
2192.40.06.040	M6	40	18	10	4	4
2192.40.08.012	M8	12	8.25	13	5	5
2192.40.08.016	M8	16	12.25	13	5	5
2192.40.08.020	M8	20	16.25	13	5	5
2192.40.08.025	M8	25	21.25	13	5	5
2192.40.08.030	M8	30	26.25	13	5	5
2192.40.08.035	M8	35	22	13	5	5
2192.40.08.040	M8	40	22	13	5	5
2192.40.08.045	M8	45	22	13	5	5
2192.40.08.050	M8	50	22	13	5	5
2192.40.08.060	M8	60	22	13	5	5
2192.40.10.020	M10	20	15.5	16	6	7
2192.40.10.025	M10	25	20.5	16	6	7
2192.40.10.030	M10	30	25.5	16	6	7
2192.40.10.060	M10	60	26	16	6	7
2192.40.10.080	M10	80	26	16	6	7
2192.40.10.090	M10	90	26	16	6	7
2192.40.12.030	M12	30	24.75	18	7	8
2192.40.12.035	M12	35	29.75	18	7	8

Hexagon socket countersunk head cap screw, ISO 10642 - Strength class 8.8



2192.30.

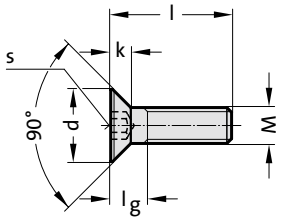

2192.30. Hexagon socket countersunk head cap screw, ISO 10642 - Strength class 8.8

Order No	M	l	l_g	d	k	s
2192.30.03.006	M3	6	3.2	6	1.7	2
2192.30.03.008	M3	8	3.2	6	1.7	2
2192.30.03.010	M3	10	3.2	6	1.7	2
2192.30.04.008	M4	8	4.4	8	2.3	2.5
2192.30.05.010	M5	10	5.2	10	2.8	3
2192.30.05.012	M5	12	5.2	10	2.8	3
2192.30.06.010	M6	10	6.3	12	3.3	4
2192.30.06.012	M6	12	6.3	12	3.3	4
2192.30.06.016	M6	16	6.3	12	3.3	4
2192.30.06.020	M6	20	6.3	12	3.3	4
2192.30.06.025	M6	25	6.3	12	3.3	4
2192.30.08.016	M8	16	8.2	16	4.4	5
2192.30.08.020	M8	20	8.2	16	4.4	5
2192.30.08.025	M8	25	8.2	16	4.4	5
2192.30.10.020	M10	20	10	20	5.5	6
2192.30.10.025	M10	25	10	20	5.5	6
2192.30.12.030	M12	30	11.8	24	6.5	8

subject to alterations

Screw plug

2192.90.

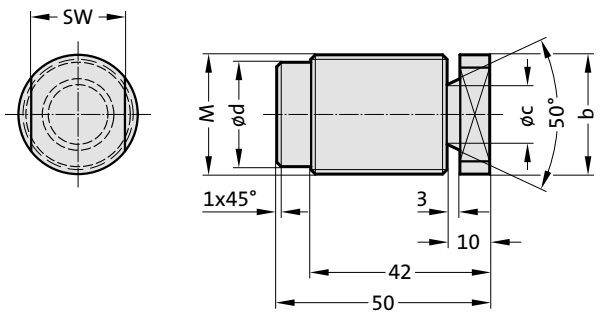



Description:

Repair solution:
Screw plugs are used to seal off defective boreholes, pass-through holes or shrink holes.

Note:

Screw in the screw plug as far as it will go (minimum screw-in length =diameter).
The screw plug can be secured to prevent it becoming loose during reworking by applying, for example, high-strength LOCTITE® (order no. 281.270).
Remove width across flats and protuding thread mechanically.

2192.90. Screw plug

Order No	Material	M	b	c	d	SW*
2192.90.1.12.150	C15 (1.0401)	M12x1,5	12	8	8.5	10
2192.90.1.16.150	C15 (1.0401)	M16x1,5	16	10	12.5	12
2192.90.1.20.150	C15 (1.0401)	M20x1,5	20	12	16.5	17
2192.90.1.24.150	C15 (1.0401)	M24x1,5	24	14	20.5	19
2192.90.1.28.150	C15 (1.0401)	M28x1,5	28	14	24.5	22
2192.90.1.30.150	C15 (1.0401)	M30x1,5	30	12	27.4	22
2192.90.1.32.150	C15 (1.0401)	M32x1,5	32	14	28.5	22
2192.90.2.12.150	GG25 (EN-GJL-250)	M12x1,5	12	8	8.5	10
2192.90.2.16.150	GG25 (EN-GJL-250)	M16x1,5	16	10	12.5	12
2192.90.2.20.150	GG25 (EN-GJL-250)	M20x1,5	20	12	16.5	17
2192.90.2.24.150	GG25 (EN-GJL-250)	M24x1,5	24	14	20.5	19
2192.90.2.28.150	GG25 (EN-GJL-250)	M28x1,5	28	14	24.5	22
2192.90.2.30.150	GG25 (EN-GJL-250)	M30x1,5	30	12	27.4	22
2192.90.2.32.150	GG25 (EN-GJL-250)	M32x1,5	32	14	28.5	22

*SW = Width across flats

Flat mushroom head screw with hexagon socket



2192.61.

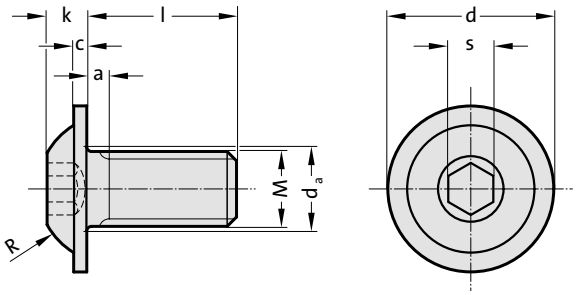

Mounting example

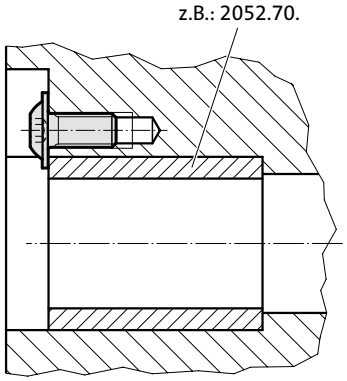

Material:

Strength class 10.9 = Code No 1.

2192.61. Flat mushroom head screw with hexagon socket

Order No	M	l	k	s	c	a	d_a	d	R
2192.61.06.012	M6	12	3.2	4	1.2	2	7	13.27	5.6
2192.61.06.016	M6	16	3.2	4	1.2	2	7	13.27	5.6
2192.61.06.020	M6	20	3.2	4	1.2	2	7	13.27	5.6
2192.61.08.016	M8	16	4.3	5	1.5	2.5	9.2	17.77	7.5
2192.61.08.020	M8	20	4.3	5	1.5	2.5	9.2	17.77	7.5
2192.61.08.025	M8	25	4.3	5	1.5	2.5	9.2	17.77	7.5
2192.61.10.020	M10	20	5.3	6	1.75	3	11.2	22.18	10

subject to alterations

Clamping tool set



Clamping tool set

with clamping jaws and screw paste.

The clamping tool set is designed for machine tools with bedplates that have fixing slots and they contain all the necessary components for fast clamping of tools, devices and workpieces. All parts are interchangeable and complementary to each other. They are made of high tensile steel to DIN or company standards. Bolt items strength class 8 or 10. The wooden box has a detachable hinged cover.

2140.01.01. Clamping tool set

Order No 2140.01.01...		...10.10			...12.12			...12.14			...16.16			...16.18		
Contents		M 10×10			M 12×12			M 12×14			M 16×16			M 16×18		
Universal-clamping units	Size	1	2	3	2		3	2		3	2		3	2		3
	No.	4	4	2	4		4	4		4	4		4	4		4
Step clamps	Size	11×80			14×100			14×100			18×125			18×125		
	No.	4			4			4			4			4		
Screws for fixing slots DIN 787 (Order No 2140.30.)	Size	100	63	40	125	80	50	125	80	50	160	100	63	160	100	63
	No.	4	4	2	4	4	2	4	4	2	4	4	2	4	4	2
Pin screws	Size	80			100			100			125			125		
	No.	4			4			4			4			4		
Hexagonal nuts 1.5 d deep	Size	M10			M12			M12			M16			M16		
	No.	6			6			6			6			6		
Conical sockets, similar to DIN	Size	M10			M12			M12			M16			M16		
	No.	6			6			6			6			6		
Extension nuts 3.0 d deep	Size	M10			M12			M12			M16			M16		
	No.	4			4			4			4			4		
Clamping jaws, type Bulle	Size	12			12			14			16			18		
	No.	4			4			4			4			4		
T-slot scraper	Size	-			-			14-20			14-20			14-20		
	No.	-			-			1			1			1		
Ring/open ended spanners	Size	16×16			18×18			18×18			24×24			24×24		
	No.	1			1			1			1			1		
Screw paste	No.	1			1			1			1			1		

Clamping Tool Set

Clamping tool set

With spring-mounted clamp holder and screw paste.

Description as 2140.01.01 but without clamping jaws.
Contains 4 spring-mounted clamp holders instead.



2140.01.02. Clamping Tool Set

Order No 2140.01.02...		...10.10	...12.12	...12.14	...16.16	...16.18	...20.20	..20.22	...20.24
Contents		M 10×10	M 12×12	M 12×14	M 16×16	M 16×18	M 20×20	M 20×22	M 20×24
Universal-clamping units	Size	1 2 3	2 3	2 3	2 3	2 3	2 3	2 3	2 3
	No.	4 4 2	4 4	4 4	4 4	4 4	4 4	4 4	4 4
Step clamps	Size	11×80	14×100	14×100	18×125	18×125	22×160	22×160	22×160
	No.	4	4	4	4	4	4	4	4
Screws for fixing slots DIN 787 (Order No. 2140.30.)	Size	100 63	125 80	125 80	160 100	160 100	200 125	200 125	-
	No.	4 4	4 4	4 4	4 4	4 4	4 4	4 4	-
Pin screws	Size	80	100	100	125	125	125	125	200 125
	No.	4	4	4	4	4	4	4	4 8
Hexagonal nuts 1.5 d deep	Size	M10	M12	M12	M16	M16	M20	M20	M20
	No.	6	4	4	4	4	6	6	6
Conical sockets. similar to DIN	Size	M10	M12	M12	M16	M16	M20	M20	M20
	No.	6	6	6	6	6	6	6	6
Extension nuts 3 d deep	Size	M10	M12	M12	M16	M16	M20	M20	M20
	No.	4	4	4	4	4	4	4	4
T-slot scraper	Size	-	-	14-20	14-20	14-20	14-20	22-32	22-32
	No.	-	-	1	1	1	1	1	1
Ring/open ended spanners	Size	16×16	18×18	18×18	24×24	24×24	30×30	30×30	30×30
	No.	1	1	1	1	1	1	1	1
Nuts for fixing slots	Size	-	-	-	-	-	-	-	M 20×24
	No.	-	-	-	-	-	-	-	8
Clamp holders	Size.	1	2	2	3	3	4	4	4
	No.	4	4	4	4	4	4	4	4
Screw paste	No.	1	1	1	1	1	1	1	1

A Die Sets

B Precision Ground Plates and Flat Bars

C Lifting and Clamping Devices

D Guide elements

Pillars, bushes, mounting flanges, ball cages, oilless guide elements

E Ground Precision Components

F Springs

G Elastomer-Bars, -Sheets, -Sections

H FIBRO Chemical Tooling Aids

J Peripheral Equipment

K Cam Units

L Standard Parts for Mould Making



Guide Elements

Guide Elements

The great importance of exact alignment between punches and matrices in stamping dies has been recognized widely. The accuracy and maintenance of this alignment depends entirely on the quality and wear resistance of the guide elements.

As a consequence of recent rapid developments in stamping techniques it has also been accepted that conventional bush-pillar sets of casehardened steel can no longer stand up to the demands of the modern press shop with its more sophisticated dies, ever faster presses and the stresses in today's carbide tools.

The introduction of FIBRO Guide Elements made available an extensive range, principally based on superlative quality, and comprising some new, highly advanced bearing materials as well as novel assembly techniques of superior accuracy.

Recent additions have further broadened this range, especially in regard of demountable guiding components.

All FIBRO Guide Bushes for permanent fixing are laid out for epoxy-bonding. This highly reliable method ensures unparalleled accuracy together with the elimination of shrink allowances and rectification honing.

Ball Bearing Guides principally excel in undemanding maintenance and through the complete absence of bearing play. Their easy movement on the bench makes them very popular with die makers. Highest stroking speeds present no problems. But common to all ball bearings there remains the characteristic weakness to shock loads, the danger of ball impingement. To some extent this can be compensated for by oversized pillar diameters and the use of four-pillar die sets.

The group of Sliding-Type Guides affords much greater stability, partly due to the damping effect of the all-important, vital oil film . . . which in the past used to be threatened always by the vagaries of lubrication service and the propensity to rupture at high frequencies of travel reversal.

Extensive protection against these perils is offered by FIBRO Sintered Ferrite Bushes. Used in most of our sliding guide systems, their advanced technology comprises:

– porous structure, vacuum-filled with oil
– carbonitrided surface of extreme hardness
– outstanding friction properties
– exceptional wear-resistance
– thousands of oil-retaining porosity pockets.

In combination with our mirror-finished pillars, ferrite guide bushes represent a guiding system of alltogether superior properties. A system that virtually precludes seizing under all but the most extreme running conditions.

Beyond such limitations there exist combinations of high velocities with very short strokes where even ferrite bushes cannot guarantee permanence of the oil film.
Here, the rigidity of the sliding guide has to be weighed up against the safety of ball bearings: die set guides are not entirely without problems yet! But at FIBRO we find ourselves very busy indeed with the remainder.

Technical progress may incur modifications without notice.

FIBRO GUIDE ELEMENTS – DESIGNED AND PRODUCED BY PEOPLE IN PURSUIT OF PERFECTION.

FIBRO

Contents

Notes on guide elements D21

Guide elements - Pairing classification D22-23

Guide elements - Selection matrix D24

Deflection of pillars and bending equation D25



206.51. Ball cage, small dimension D26



206.54. Guide bush for ball bearing, small dimension D26



202.19. Guide pillar DIN 9825/ISO 9182-2 D27



202.17. Guide Pillar with ball cage retainer D28



202.22. Guide pillar with internal thread on both sides, ~DIN 9825/~ISO 9182-2 D29



202.23. Guide pillar with internal thread on bottom, ~DIN 9825/~ISO 9182-2 D30



202.24. Guide pillar with internal thread on top, ~DIN 9825/~ISO 9182-2 D31



202.21. Guide pillar endwise bolt-on type, ~DIN 9825/~ISO 9182-2 D32



202.55. Guide pillar endwise bolt-on type with ball cage, ~DIN 9825/ ~ISO 9182-2 D34



202.29. Guide pillar "ECO-Line", ~DIN 9825/ ~ISO 9182-2 D36



202.31. Guide pillar "ECO-Line" endwise bolt-on type, ~DIN 9825/ ~ISO 9182-2 D38



2021.50. Guide pillar, conical, DIN 9825/ ISO 9182-4/AFNOR D40

Contents



2021.58. D42

Demountable guide pillar, conical, with ball cage retainer, DIN 9825/ ISO 9182-4/AFNOR



2021.53. D44

Retaining disc with countersunk head cap screw, DIN 9825/ ISO 9182-4



202.53. D44

Retaining disc with socket cap screw, ~ AFNOR



2021.39. D45

Retaining bush for guide pillar conical 2021.50., DIN 9825/ ISO 9182-4



210.39. D46

Retaining bush for guide pillar conical 2021.50.,~ AFNOR



2022.19. D47

Guide pillar for large tools, DIN 9833/ISO 9182-3



2022.13. D48

Guide pillar with 5° pilot taper, to VW-Standard



2022.15. D49

Guide pillar with pilot taper, VDI 3356



2022.17. D50

Guide pillar with groove, to VW

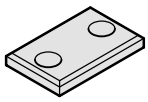

2022.40.1. D51

Locating plate for guide pillar, to VW



2022.25. D52

Guide pillar with retaining ring groove, ~AFNOR

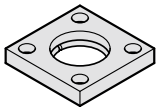

2073.46. D53

Clamping flange with retaining ring, ~AFNOR



2022.16. D54

Guide pillar with snap ring groove, to Mercedes-Benz Standard



2022.12. D56

Guide pillar with pilot tapper and groove, to Mercedes-Benz Standard

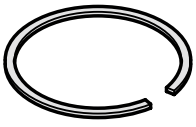

2061.48. D57

Snap ring



2022.16.45. D58

Guide pillar with groove, to CNOMO

FIBRO

Contents



2022.16.48. D59

Guide pillar with groove

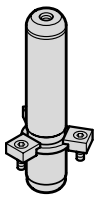

2022.29. D60

Guide pillar with collar, to WDX

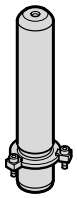

2021.46. D62

Guide pillar with collar, screw clamp retention, DIN 9825/~ISO 9182-5

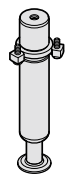

2021.44. D64

Guide pillar with collar and ball cage retainer



2021.43. D66

Retaining disc with screw

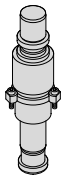

2025.94. D67

Ball guide unit to Mercedes-Benz Standard

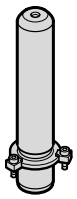

2021.29. D68

Guide pillar with collar "ECO-LINE"

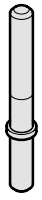

202.61. D69

Guide pillar with collar

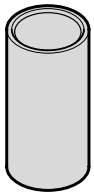

2062.44.012. D70

Guide bush for ball bearing, for highest stroking speed

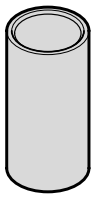

2061.44. D70-99

Guide bush for ball bearing, ISO 9448-3



206.41. D71

Ball cage, plastic, for highest stroking speed



2020.63. D72

Demountable guide pillar with centre fixing

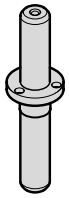

2020.62. D74

Demountable guide pillar with centre fixing

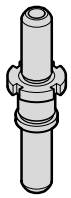

202.60 D76

Demountable guide pillar with centre fixing and ring nut

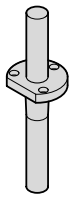

2020.64. D77

Demountable guide pillar with conical centre fixing



2021.64. D78

Retaining bush for guide pillar conical 2020.64.

Contents



2073.48. D79

Ring nut DIN 1804

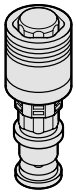

2024.94. D80

Guide unit with collar
MILLION GUIDE

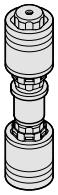

2024.96. D82

Guide unit with center fixing
MILLION GUIDE

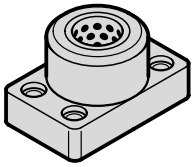

2031.70. D84

Guide bearing with solid lubricant

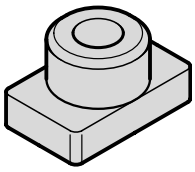

2031.01. D85

Retention bearing

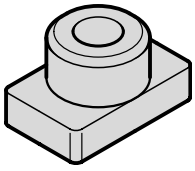

2031.31. D86

Guide bearing, sintered guide

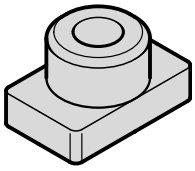

2031.41. D87

Guide bearing for ball bearing guide

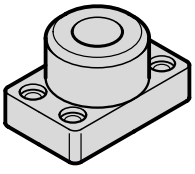

2031.02. D88

Retention bearing with screw holes

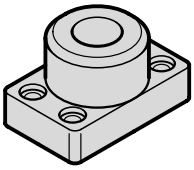

2031.34. D89

Guide bearing with screw holes,
sintered guide

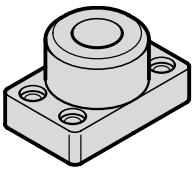

2031.42. D90

Guide bearing with screw holes, for
ball bearing guide

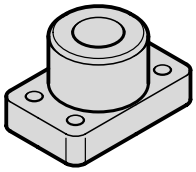

2031.04. D91

Retention bearing, low build height

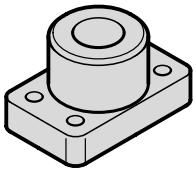

2031.38. D92

Guide bearing, low build height,
sintered guide

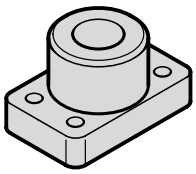

2031.44. D93

Guide bearing low build height, for
ball bearing guide

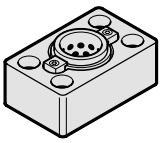

2032.70. D94

Guide bearing with headed guide
bush with solid lubricant

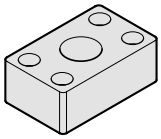

2032.02. D95

Retention bearing for guide pillars
for large tools

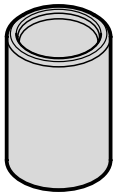

2051.32. D96

Guide bush, sintered ferrite
carbonitrided with long-term
lubrication, ISO 9448-2

FIBRO

Contents

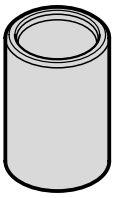

2051.92. D97

Guide bush "ECO-LINE", bronzeplated, ISO 9448-2

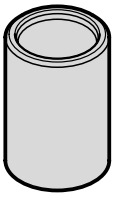

2051.72. D98

Guide bush "ECO-LINE", Bronze with solid lubrication rings, ISO 9448-2

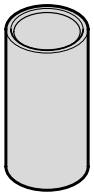

206.49. D100

Guide bush for ball bearing, AFNOR

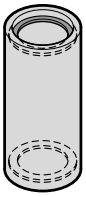

2061.47. D101

Guide bush for ball bearing, with stroke limitation

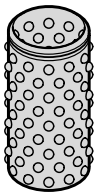

206.71. D102

Ball cage with circlip groove, Brass

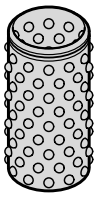

2060.61. D103

Ball cage with circlip groove, Aluminium



206.73. D104

Ball cage with assembly aid, Brass



2060.63. D105

Ball cage with assembly aid, Aluminium

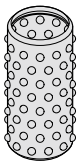

206.75. D106

Ball cage with circlip and fastening ring groove, Brass



2060.65. D107

Ball cage with circlip and fastening ring groove, Aluminium

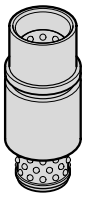

2081.67. D108

Headed guide bush with ball cage retainer

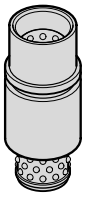

2081.68. D109

Headed guide bush with ball cage retainer

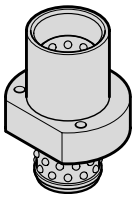

2091.67. D110

Flanged guide bush with ball cage retainer

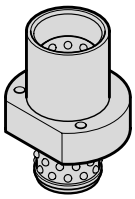

2091.68. D111

Flanged guide bush with ball cage retainer

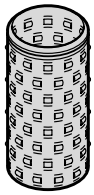

2061.82. D112

Roller cage with circlip groove, Brass



206.72. D113

Circlip DIN 471

Contents

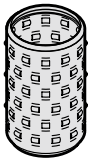

2061.84. D114

Roller cage with assembly aid, Brass

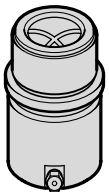

2081.81. D115

Headed guide bush, bronze coated, ISO 9448-6

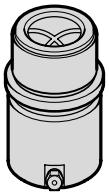

2081.84. D116

Headed guide bush, bronze coated, ISO 9448-6

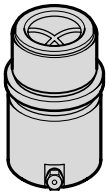

2081.85. D117

Headed guide bush, bronze coated, ISO 9448-6

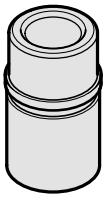

2081.31. D118

Headed guide bush, sintered ferrite carbonitrided with long-term lubrication, ISO 9448-6

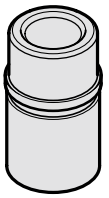

2081.32. D119

Headed guide bush, sintered ferrite carbonitrided with long-term lubrication, ISO 9448-6

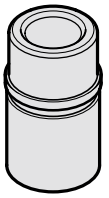

2081.33. D120

Headed guide bush, sintered ferrite carbonitrided with long-term lubrication, ISO 9448-6

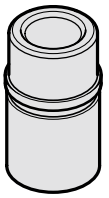

2081.34. D121

Headed guide bush, sintered ferrite carbonitrided with long-term lubrication, ISO 9448-6

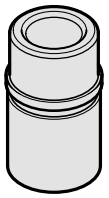

2081.35. D122

Headed guide bush, sintered ferrite carbonitrided with long-term lubrication, ISO 9448-6

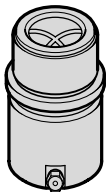

2081.91. D123

Headed guide bush "ECO-LINE", bronzeplated, ISO 9448-6

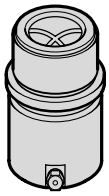

2081.94. D124

Headed guide bush "ECO-LINE", bronzeplated, ISO 9448-6



2081.95. D125

Headed guide bush "ECO-LINE", bronzeplated, ISO 9448-6

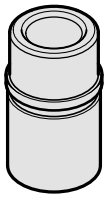

2081.71. D126

Headed guide bush "ECO-LINE", Bronze with solid lubricant rings, ISO 9448-6

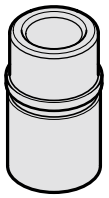

2081.74. D127

Headed guide bush "ECO-LINE", Bronze with solid lubricant rings, ISO 9448-6

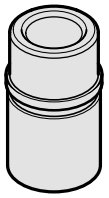

2081.75. D128

Headed guide bush "ECO-LINE", Bronze with solid lubricant rings, ISO 9448-6

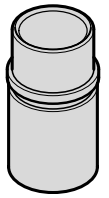

2081.44. D129

Headed guide bush for ball bearing, ISO 9448-7

FIBRO

Contents

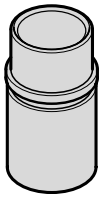

2081.45. D130

Headed guide bush for ball bearing, ISO 9448-7



2081.46. D131

Headed guide bush for ball bearing, ISO 9448-7

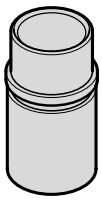

2081.47. D132

Headed guide bush for ball bearing, ISO 9448-7



2081.49. D133

Headed guide bush for ball bearing, ISO 9448-7

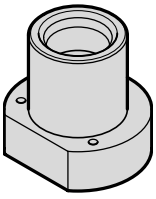

2091.31. D134

Flanged guide bush, sintered ferrite carbonitrided with long-term lubrication, ISO 9448-4

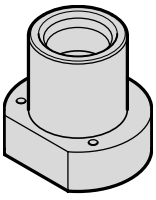

2091.32. D135

Flanged guide bush, sintered ferrite carbonitrided with long-term lubrication, ISO 9448-4

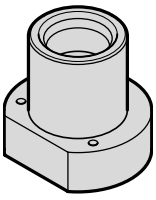

2091.34. D136

Flanged guide bush, sintered ferrite carbonitrided with long-term lubrication, ISO 9448-4

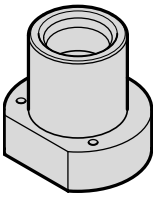

2091.91. D137

Flanged guide bush "ECO-LINE", bronzeplated, ISO 9448-4

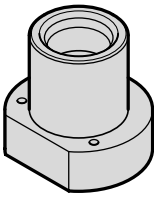

2091.92. D138

Flanged guide bush "ECO-LINE", bronzeplated, ISO 9448-4

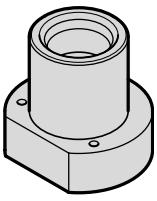

2091.94. D139

Flanged guide bush "ECO-LINE", bronzeplated, ISO 9448-4

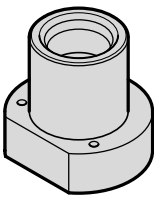

2091.71. D140

Flanged guide bush "ECO-LINE", Bronze with solid lubricant rings, ISO 9448-4

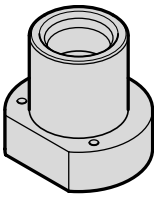

2091.72. D141

Flanged guide bush "ECO-LINE", Bronze with solid lubricant rings, ISO 9448-4

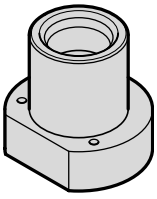

2091.74. D142

Flanged guide bush "ECO-LINE", Bronze with solid lubricant rings, ISO 9448-4

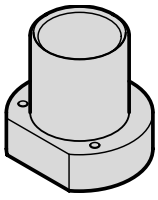

2091.44. D143

Flanged guide bush for ball bearing, ISO 9448-5

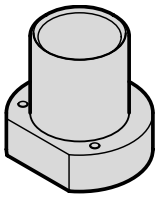

2091.45. D144

Flanged guide bush for ball bearing, ISO 9448-5

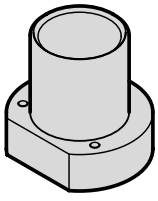

2091.46. D145

Flanged guide bush for ball bearing, ISO 9448-5

Contents

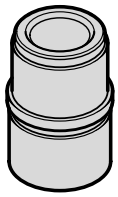

210.31. D146

Headed guide bush, sintered ferrite carbonitrided with long-term lubrication, ~AFNOR

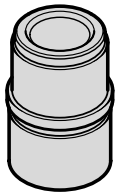

210.34. D147

Headed guide bush, sintered ferrite carbonitrided with long-term lubrication, ~AFNOR

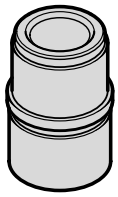

210.35. D148

Headed guide bush, sintered ferrite carbonitrided with long-term lubrication, ~AFNOR

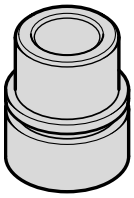

210.44. D150

Headed guide bush for ball bearing, ~AFNOR

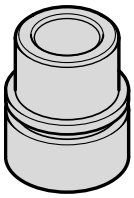

210.46. D152

Headed guide bush for ball bearing, ~AFNOR

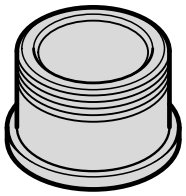

210.45. D154

Guide bush with collar, for ball bearing, ~AFNOR

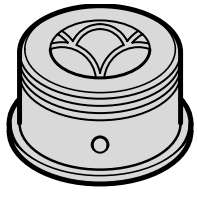

210.85. D155

Guide bush with collar, bronze coated, ~AFNOR

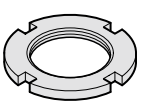

207.48. D156

Slotted nut

Oilless guide elements D157-158

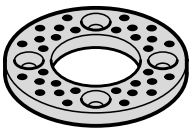

2053.70. D159

Thrust washer, Bronze with solid lubricant

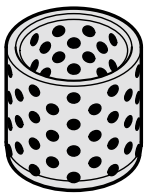

2052.70. D160-161

Guide bush, Bronze with solid lubricant

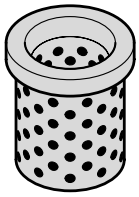

2085.70. D162

Guide bush with collar, Bronze with solid lubricant

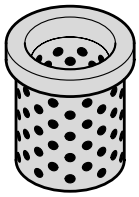

2085.71. D163

Guide bush with collar, Bronze with solid lubricant

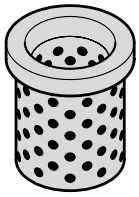

2086.70. D164

Guide bush with collar, Bronze with solid lubricant

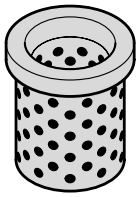

2085.72. D165

Guide bush with collar, Bronze with solid lubricant

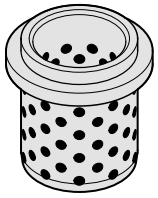

2082.70. D166

Guide bush with collar, Bronze with solid lubricant, DIN 9834/ISO 9448

FIBRO

Contents

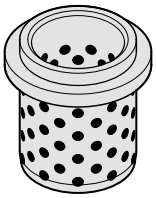

2082.71. D167

Guide bush with collar, Bronze with solid lubricant, NAAMS

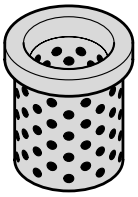

2086.71. D168

Guide bush with collar, Bronze with solid lubricant, NAAMS

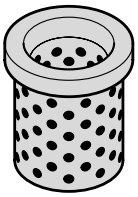

2102.70. D169

Guide bush with collar, Bronze with solid lubricant, CNOMO

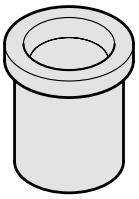

2102.71. D170

Guide bush with collar, Bronze, CNOMO

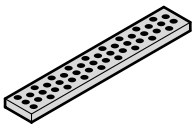

2961.71. D171

Flat guide bar, Bronze with solid lubricant

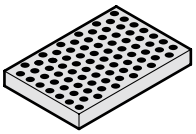

2961.76. D172

Flat guide bar, Bronze with solid lubricant

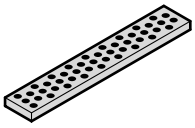

2961.77. D173

Flat guide bar, Bronze with solid lubricant

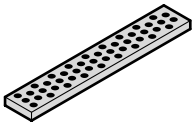

2961.73. D174

Flat guide bar with two sliding surfaces, Bronze with solid lubricant

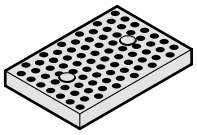

2961.70. D175

Flat guide bar, Bronze with solid lubricant

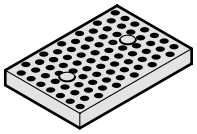

2961.75. D176

Flat guide bar, Bronze with solid lubricant

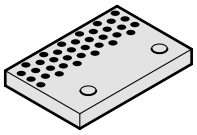

2961.74. D177

Retaining plate, Bronze with solid lubricant, VDI 3357

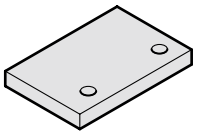

2961.79. D178

Retaining plate, Steel, VDI 3357

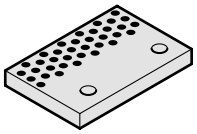

2961.81. D179

Retaining plate, Steel with solid lubricant, VDI 3357

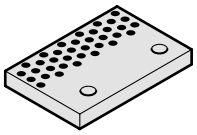

2961.78. D180

Retaining plate, Bronze with solid lubricant

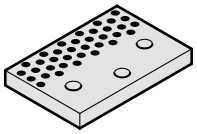

2961.82. D181

Retaining plate, Steel with solid lubricant, NAAMS

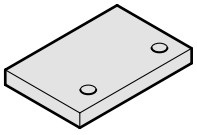

2961.79.45. D182

Retaining plate, Steel, CNOMO

Contents

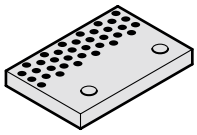

2961.81.45. D183

Retaining plate, Bronze with solid lubricant, CNOMO

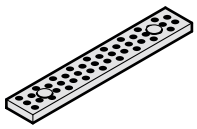

2960.72. D184

Sliding pad, small dimension, Bronze with solid lubricant

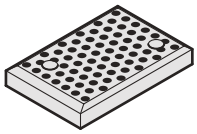

2960.71. D186

Sliding pad, Bronze with solid lubricant, VDI 3357

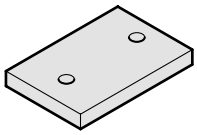

2960.87. D188

Sliding pad, Steel, VDI 3357

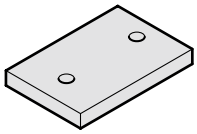

2960.30. D190

Sliding pad, Steel with sinterlayer, VDI 3357

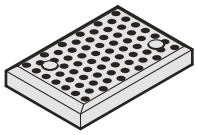

2960.70. D192

Sliding pad, Bronze with solid lubricant, ISO 9183-1

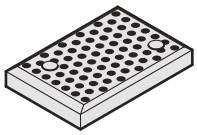

2960.85. D194

Sliding pad, Bronze with solid lubricant

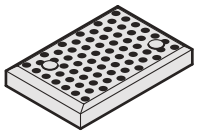

2960.86. D195

Sliding pad, Bronze with solid lubricant

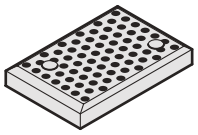

2960.76. D196

Sliding pad, Bronze with solid lubricant

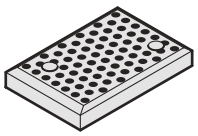

2962.78.45. D197

Sliding pad, Bronze with solid lubricant, CNOMO

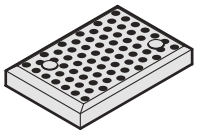

2962.78. D198

Sliding pad, Bronze with solid lubricant

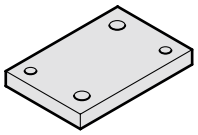

2962.84.45. D200

Sliding pad, Steel, CNOMO

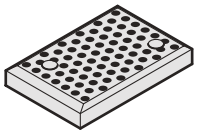

2962.85. D201

Sliding Pad, Steel with solid lubricant

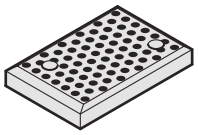

2960.79. D202

Sliding pad, Bronze with solid lubricant, NAAMS

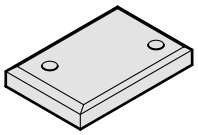

2960.80. D203

Sliding pad, Steel, NAAMS

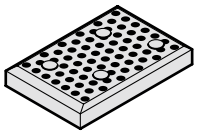

2960.74. D204

Sliding pad, Bronze with solid lubricant, AFNOR/ISO 9183-2

FIBRO

Contents

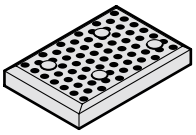

2960.75. D206

Sliding pad, Special cast iron (GG25) with solid lubricant, AFNOR/ ISO 9183-2

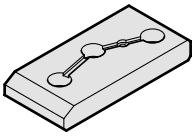

2960.44.45. D208

Sliding pad, Steel with oil groove, CNOMO

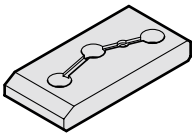

2960.54.45. D210

Sliding pad, Bronze with oil groove, CNOMO

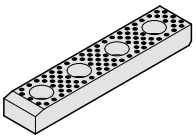

2960.81. D211

Sliding pad, Bronze with solid lubricant, VDI 3357

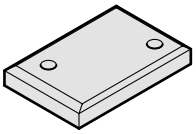

2960.88. D212

Sliding pad, Steel, VDI 3357

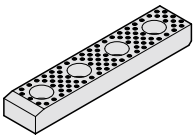

2960.93. D214

Sliding Pad, Bronze with solid lubricant, VDI 3357

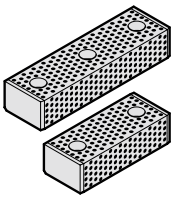

2962.75. D215

Guide bar with two sliding surfaces, Bronze with solid lubricant, VDI 3357

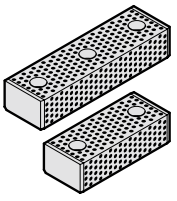

2962.75.45. D216

Guide bar with two sliding surfaces, Bronze with solid lubricant, CNOMO

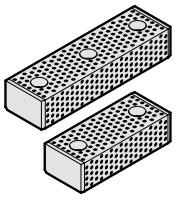

2962.76. D217

Guide bar with three sliding surfaces, Bronze with solid lubricant

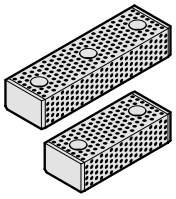

2962.77. D218

Guide bar with two sliding surfaces, Bronze with solid lubricant

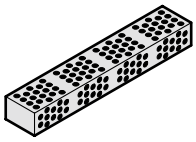

2962.74. D219

Guide bar with four sliding surfaces, Bronze with solid lubricant

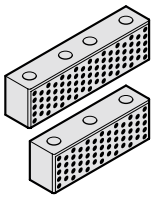

2962.79. D220

Guide bar with one sliding surfaces, Bronze with solid lubricant

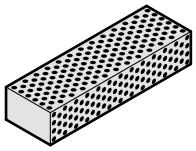

2962.80. D221

Guide bar with three sliding surfaces, Bronze with solid lubricant

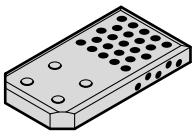

2960.73. D222

Guide bracket, Steel with solid lubricant, VDI 3387

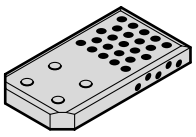

2960.89. D223

Guide bracket, Bronze with solid lubricant, VDI 3387

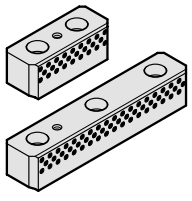

2966.72. D224

Slide centre guide, Bronze with solid lubricant

Contents

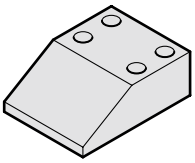

2960.90. D225

Overrun Cam, Steel hardened, VDI 3357

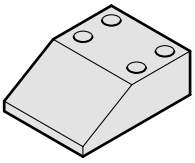

2960.91. D226

Overrun Cam, Steel hardened and gas nitrided, VDI 3357

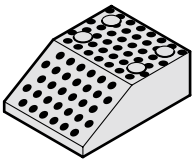

2960.92. D227

Overrun Cam, Bronze with solid lubricant, VDI 3357

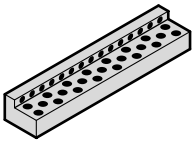

2962.70. D228

Angled guide gib, Bronze with solid lubricant

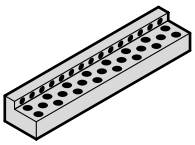

2962.70.45. D229

Angled guide gib, Bronze with solid lubricant, CNOMO

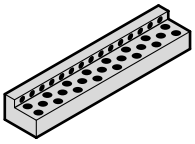

2962.71. D230

Angled guide gib, Bronze with solid lubricant

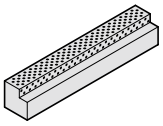

2962.72. D231

Angled guide gib, Bronze with solid lubricant

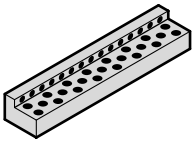

2962.73. D232

Angled guide gib, Bronze with solid lubricant

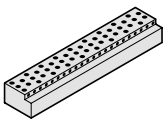

2962.81. D233

Angled guide gib, Bronze with solid lubricant

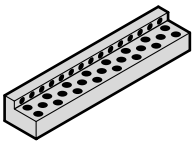

2962.82. D234

Angled guide gib, Bronze with solid lubricant

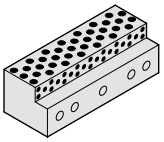

2962.83. D235

Angled guide gib, Bronze with solid lubricant

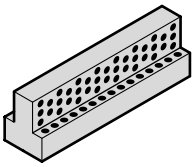

2964.77. D236

T-Guide bar, Bronze with solid lubricant

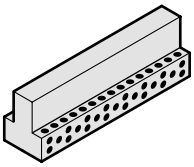

2964.78. D236

T-Guide bar, Bronze with solid lubricant

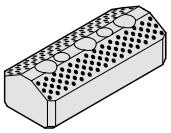

2963.82. D237

Sliding block, Bronze with solid lubricant, NAAMS

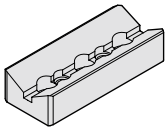

2963.83. D237

Prismatic guide, Steel, NAAMS

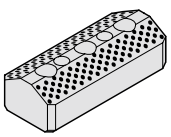

2963.84. D238

Sliding block, Bronze with solid lubricant, VDI 3357

FIBRO

Contents

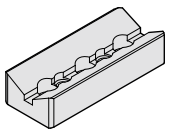

2963.85. D238

Prismatic guide, Steel, VDI 3357

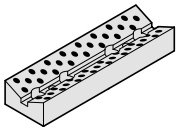

2963.70. D239

Prismatic guide, Bronze with solid lubricant

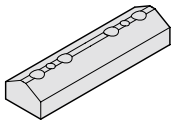

2963.71. D239

Sliding block, Steel

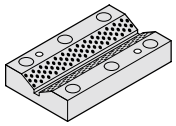

2963.72. D240

Prismatic guide, Bronze with solid lubricant

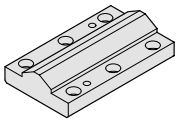

2963.73. D240

Sliding block, Steel

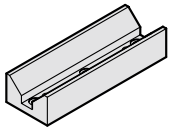

2963.81. D242

Prismatic guide, Steel

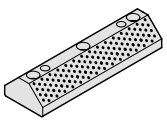

2963.80. D243

Sliding block, Bronze with solid lubricant

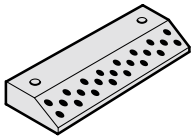

2965.81. D244

Single-sided prismatic guide, Bronze with solid lubricant

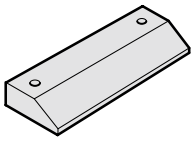

2965.83. D245

Single-sided prismatic sliding block, Steel

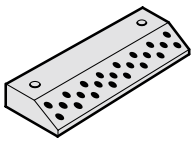

2965.80.45. D246

Single-sided prismatic guide, Bronze with solid lubricant, CNOMO

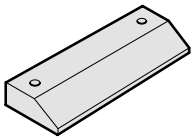

2965.82.45. D247

Single-sided prismatic sliding block, Steel, CNOMO

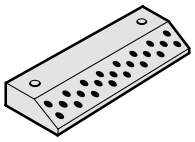

2965.80. D248

Single-sided prismatic guide, Bronze with solid lubricant

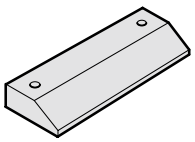

2965.82. D249

Single-sided prismatic sliding block, Steel

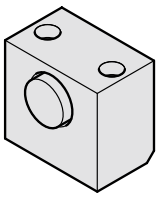

2451.6. D250

Slide stop

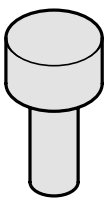

2451.6. .2 D251

Stop buffer

D252-255

Oilless guide elements - Mounting examples

Contents

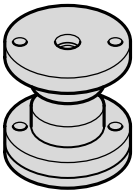

2441.11.0. D256

Centering unit with adjusting washer

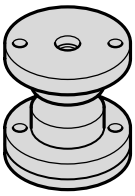

2441.11. D257

Centering unit

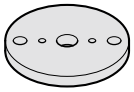

2441.11.3. D258

Adjusting washer

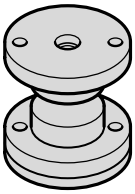

2441.13.45. D259

Centring unit, CNOMO

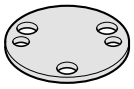

2441.13.3.45. D260

Adjusting washer, CNOMO

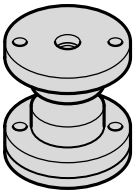

2441.13. D261

Centring unit, CNOMO

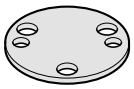

2441.13.3. D262

Adjusting washer, CNOMO

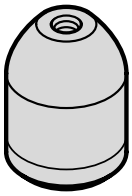

2445.10. D263

Centring pin

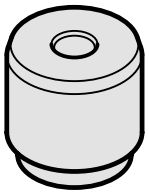

2445.11. D264

Centring pin to Mercedes-Benz standard

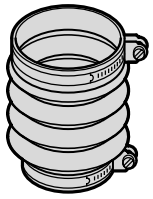

206.91. D265

Concertina shroud with spacer bush

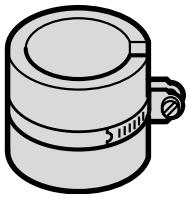

206.93. D266

Spacer bush

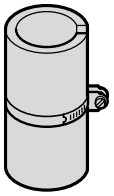

206.94. D266

Spacer tube

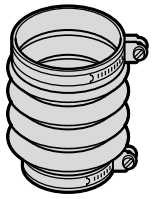

206.92. D267

Concertina shroud with spacer tube

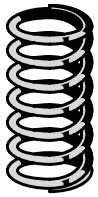

241.18. D268

Helical spring for ball cage retention

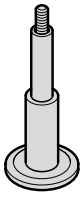

202.91. D269

Cage retainers



202.92.1. D270

Cage retainers

FIBRO

Contents

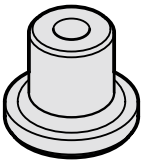

202.93. D271

Cage retainers

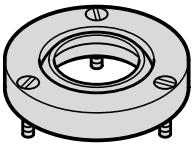

206.95./2061.95. D272

Pillar wiper

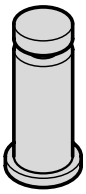

244.00.2. D273

Lifter pin for press tool strips

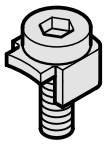

207.45 D274

Screw clamp with screw

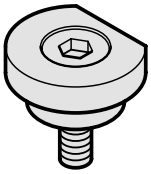

2071.45 D274

Screw clamp with screw

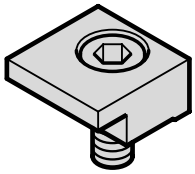

2072.45. D274

Screw clamp with screw

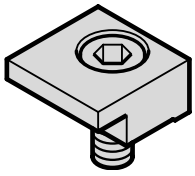

2072.46 D275

Screw clamp with screw

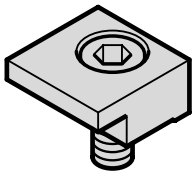

2072.46.30. D275

Screw clamp with screw, GM Standard

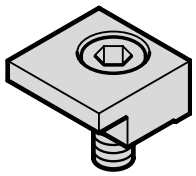

2072.47 D275

Screw clamp with screw, NAAMS

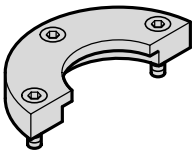

2073.45. D276

Securing flange with screws, CNOMO

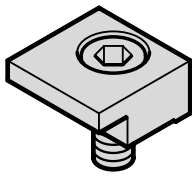

2072.48.45. D276

Screw clamp with screw, CNOMO

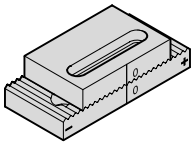

2444.12/2444.13 D278

Spacer plate toothed, with adjusting plate

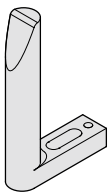

2443.10. D279

Guide

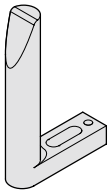

2443.10.20. D280

Guide to Mercedes-Benz Standard - unhardened

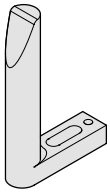

2443.10.20. .1 D281

Guide to Mercedes-Benz Standard - hardened

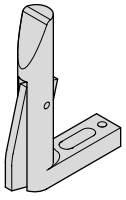

2443.12. D282

Guide with part position control and spring

Contents

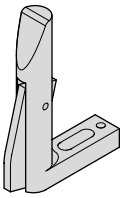

2443.13. D283

Guide with part position control, VDI

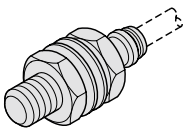

2018.00.60.08.030 D284

Inductive proximity switch

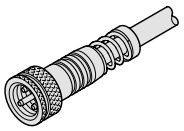

2018.00.60.23.01.5 D285

Cable - straight

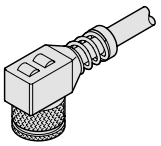

2018.00.60.23.02.5 D285

Cable , 90° connector

D286

Ball bearing guides - Loading Diagram

D287

Ball bearing guides - Tables of dynamic load indexes

D288-294

Guide elements - Mounting guidelines, Dimension tables

Notes on Guide Elements

FIBRO Precision Sliding Guides – Carbonitrided Sintered Ferrite Bushes

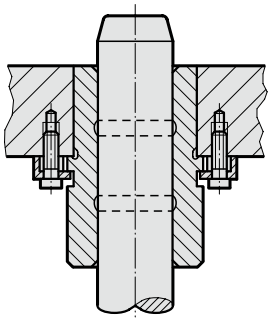

These guides employ bushes made from sintered ferrite of high purity with carbonitrided surface. Bearing surfaces are fine-ground.

The sintered ferrite has a porosity content of 18-20 % by volume, vacuum filled with special lubricant FIBROLIT LD. As additional long term lubrication it is recommended to fill up the grove in the bushing with FIBROLIT LD 280.34, see chapter H. Even under arduous running conditions, this material can be relied upon for good protection against oil film rupture.

Under no circumstances must molybdenum disulfite be added to the lubricant.

For bearing clearance ranges, see chapter D.

FIBRO Precision Sliding Guides, bronze-coated

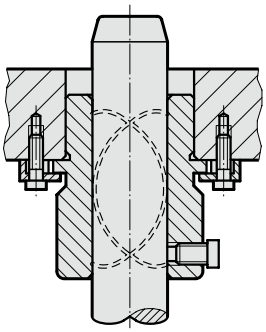

consists of a steel body with bronze-coated running surface with helical oil groove and a grease nipple for lubrication.

The steel body guarantees excellent resistance to breaking, even when subject to high loading at the edges.

FIBRO Sliding Bearings with Non-Liquid Lubricant

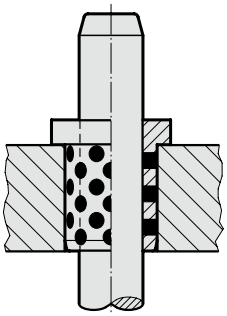

The pockets containing the non-liquid lubricant occupy some 25 to 30 per cent of the bearing surface consisting of a bronze matrix.

After an initial oil lubrication on assembly, these elements are maintenance-free.

Wherever there is a demand for non-susceptibility against impact, contamination and heat, FIBRO Maintenance-Free Bearings find their ideal application.

We recommend to apply the tolerance classes H7/f6 to bush/pillar combinations using these elements.

FIBRO High Precision Ball Bearing Guides

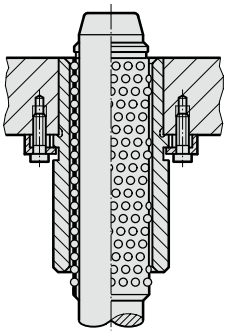

Careful manufacture at narrowest tolerances, and exactly the right amount of preloading* result in a play-free guide element of exceptional performance potential.
Our superfinished running surfaces further enhance the advantages of ball bearing guides.
Toolmakers favour ball bearing buides because of their free movement on the bench.

FIBRO ball bearing guides can be equipped with a choice of brass or aluminium ball cages, which have proved to be very successful in practice due to their ball density and stability

Ball bearing guides with their point contact of the balls remain somewhat sensitive to shock and sustained radial loads. To some extent, generous dimensioning of pillar diameters helps to compensate for this inherent disadvantage.

* Average preloading:
4 µm on pillars from 8 to 12 mm diameter
7– 9 µm on pillars from 15 to 16 mm diameter
9–11 µm on pillars from 18 to 42 mm diameter
11–13 µm on pillars from 50 to 80 mm diameter

FIBRO Precision Roller Guides

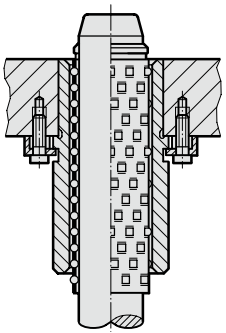

The profile roller cages are in linear contact with the guide bushing and guide pillar. This feature offers much greater capacity for radial loads in the individual roller than an identical size of ball bearing.

The caulking of the roller bearing arrangement is implemented with the same FIBRO-specific solution as that used in ball cages.

The profile rollers are arranged in a spiral formation in an axial direction. This gives each profile roller its own path. The roller cages are designed with a recess for a circlip conforming to DIN 471.

The much larger contact area with the ball bearing guide permits a significant reduction in preload values.

The following preload values apply to FIBRO Roller Guides:

For static loads/low velocities, pillar diameters			For dynamic loads/High velocities, pillar diameters		
up to Ø 25	= 2,5	µm	up to Ø 25	= 1,5	µm
Ø 30/32	= 3	µm	Ø 30/32	= 2	µm
Ø 40-50	= 3,5	µm	Ø 40-50	= 2,5	µm
Ø 63	= 4	µm	Ø 63	= 3	µm

Use only pairing class
guide pillar red = .30
guide bush yellow = .10

Pairing Classification
Guide Pillars with sliding sintered Bushes
Guide Pillars with Ball Bearing Bushes

Cutting clearance	Sliding guide bearing clearance	Ball bearing preloading		
small	small	large	Piece parts with small tolerances, closely specified cut edge properties and contours – also parts from thin material	Pairing 1
medium	medium	medium	Piece parts from sheet thicker than 1 mm – also preferably for progression dies	Pairing 2
large	large	small	Where demands on edges and burrs are not stringent; note that large die clearances require smaller shearing forces	Pairing 3

Selection of punch-matrix clearance is largely determind by piece part charcteristics such as percentage of sheared land versus breakaway,

but also by demands on burr formation.
Further criteria are: properties of piece part materials, conditions of the tool as well as the condition of the eccentric press.

Colour coding by painted dots	Sliding guide				Ball bearing			
	Pillar		Bush		Pillar		Bush	
	Colour	Order No	Colour	Order No	Colour	Order No	Colour	Order No
Pairing 1	yellow	.10	yellow	.10	yellow	.10	red	.30
	green	.20	yellow	.10	yellow	.10	green	.20
					green	.20	red	.30
Pairing 2	green	.20	green	.20	yellow	.10	yellow	.10
	red	.30	yellow	.10	green	.20	green	.20
	yellow	.10	green	.20	red	.30	red	.30
Pairing 3	red	.30	red	.30	green	.20	yellow	.10
	green	.20	red	.30	red	.30	green	.20
	yellow	.10	red	.30	red	.30	yellow	.10

Selection Criteria:
die clearance – stock thickness – material

Note:

Please note that tight bearing clearances are normally unsuitable for 4-pillar die sets. In general, wherever retainer bore geometry is not absolutely perfect, pairings 2 and 3 must be chosen. The pairing classification does not signify differences in quality, rather a selection of the necessary bearing clearance in the case of guide pillars or preloading in the case of ball bearings (see also chart next page).

Ordering Code (example):

Guide Pillar, tolerance range 1, yellow = 202.19.040.260.10 or green is then .20
Sliding guide, tolerance range 1, yellow = 2081.31.040.10

Pairing Classification
Guide Pillars with sliding sintered Bushes
Guide Pillars with Ball Bearing Bushes

FIBRO

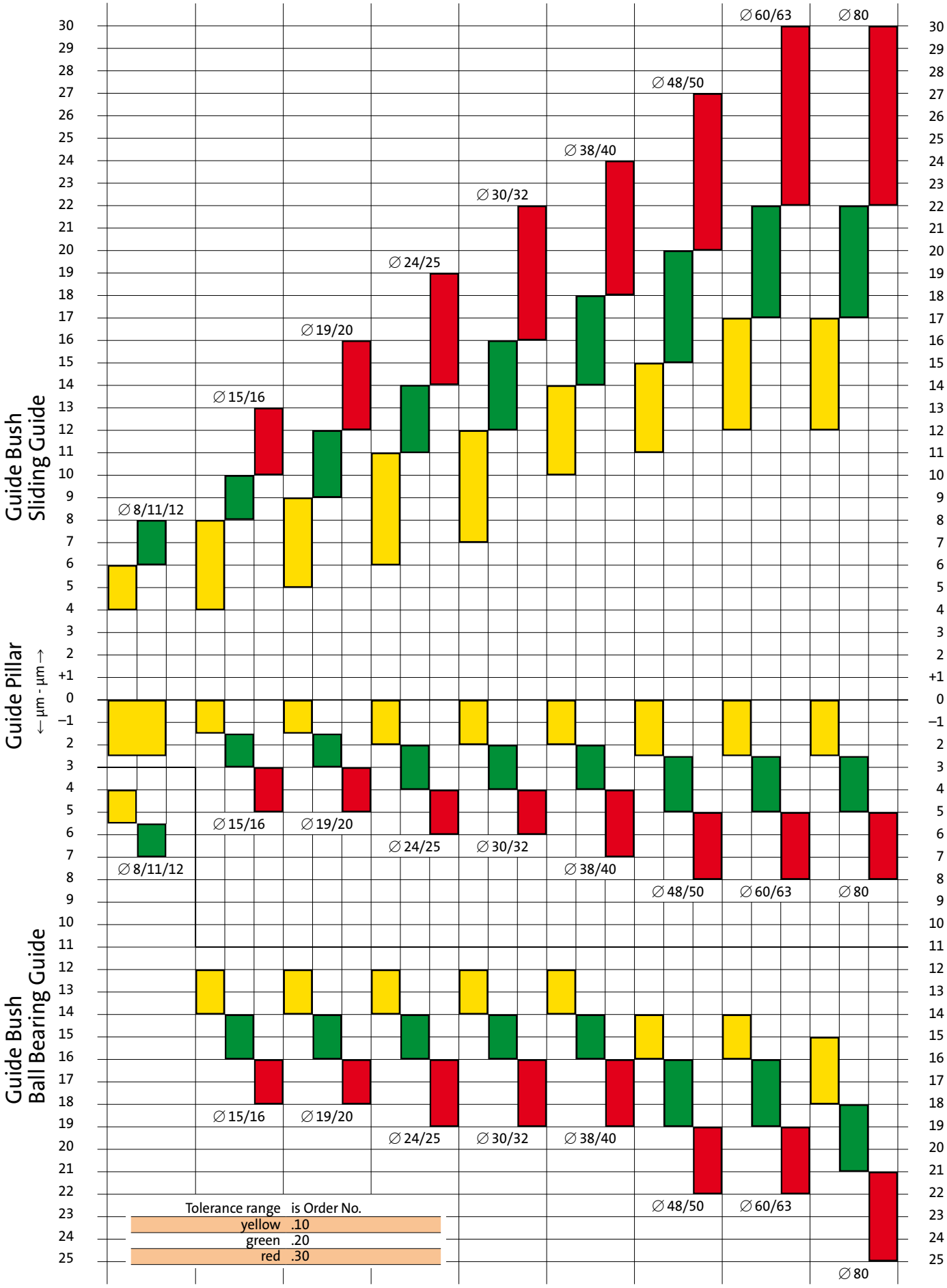

FIBRO

Selection matrix
Guide Pillars - Guide Bushes

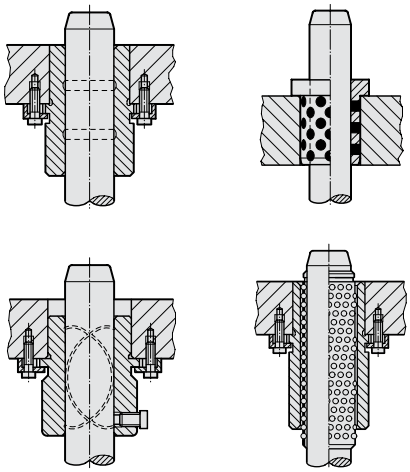

Guide Bushes		Guide Pillars	Guide pillars to DIN 9825	Guide pillars, bolt-on type	Demountable guide pillars	Guide pillars with centre fixing	Guide pillars with centre fixing			Guide pillars to AFNOR	Guide pillars to CNOMO	Guide pillars for large tools	Guide pillars ECO-LINE
			2021.50. 2021.58. 202.17. 202.19.	210.39. 2021.44. 202.21. 202.22.	2021.46. 202.55. 202.23. 202.24.	2020.64. 2020.63.	202.60. 2020.62.			2022.25.	2022.16.45.	2022.13. 2022.17. 2022.12. 2022.15. 2022.16. 2022.19. 2022.29.	202.29. 2021.29. 202.31.
		Tolerance range	.30	.20	.10	h3	.30	.20	.10	h5	-0.010 -0.025	f6	h4
Ball bearing guide bushes Mounting flanges with ball bearing guide bushes	2061.44. 2081.44. 206.49. 2081.45. 2061.47. 2081.46. 2081.67. 2081.47. 2091.67. 2081.49. 2091.44. 210.44. 2091.45. 210.45. 2091.46. 210.46. 2031.41. 2031.42. 2031.44.	.10	●[1]	●[1]	●[1]	●[1]	●[1]	●[1]	●[1]	×	×	×	×
		.20	●[1]	●[1]	●[1]	●[1]	●[1]	●[1]	●[1]	×	×	×	×
		.30	●[1]	●[1]	●[1]	●[1]	●[1]	●[1]	●[1]	×	×	×	×
Guide bushes, sintered ferrite Mounting flanges with guide bushes, sintered ferrite	2031.31. 2081.31. 2031.34. 2081.32. 2031.38. 2081.33. 2051.32. 2081.34. 2091.31. 2081.35. 2091.32. 210.31. 2091.34. 210.34. 210.35.	.10	●[1]	●[1]	●[1]	×	×	×	×	×	×	×	●
		.20	●[1]	●[1]	●[1]	×	×	×	×	×	×	×	●
		.30	●[1]	●[1]	●[1]	×	×	×	×	×	×	×	●
Guide bushes ECO-LINE bronze with solid lubrication rings	2081.71. 2091.71. 2081.74. 2091.72. 2081.75. 2091.74.	H6	●	○	×	×	×	×	×	×	×	×	●
Guide bushes bronze coated	2081.81. 210.85. 2081.84. 2081.85.	ITS	●	●	○	×	×	×	×	×	×	×	●
Guide bushes ECO-LINE bronzeplated	2081.91. 2081.94. 2081.95.	H5	●	○	×	×	×	×	×	×	×	×	●
Guide bushes with solid lubrication Mounting flanges with Guide bushes with solid lubrication	2085.70. 2031.70. 2085.72. 2087.70. 2087.71. 2087.72. 2087.73. 2082.70. 2082.71.	H7	●	×	×	×	×	×	×	●	●	●	●
Guide bushes with solid lubrication	2085.71.	E7	●	●	●	×	×	×	×	●	●	●	●
Guide bushes with solid lubrication	2086.70. 2032.70. 2052.70.	F7	●	●	×	×	×	×	×	●	●	●	●
Guide bushes with solid lubrication	2102.70. 2102.71.	G7	●	●	×	×	×	×	×	●	●	●	●
Guide bushes with solid lubrication	2086.71.	C9	●	●	●	×	×	×	×	●	●	●	●

● = suitable
●[1] = suitable (see pairing classification at the beginning of chapter D)
○ = conditionally suitable
× = not suitable

The combinations should be considered as recommendations. Depending on the installation situation and type of use, a previous examination or test is mandatory, since different combinations may result in varying clearance (slide guide) or pretension (ball guides) values.

subject to alterations

Deflection of Pillars and Bending equation

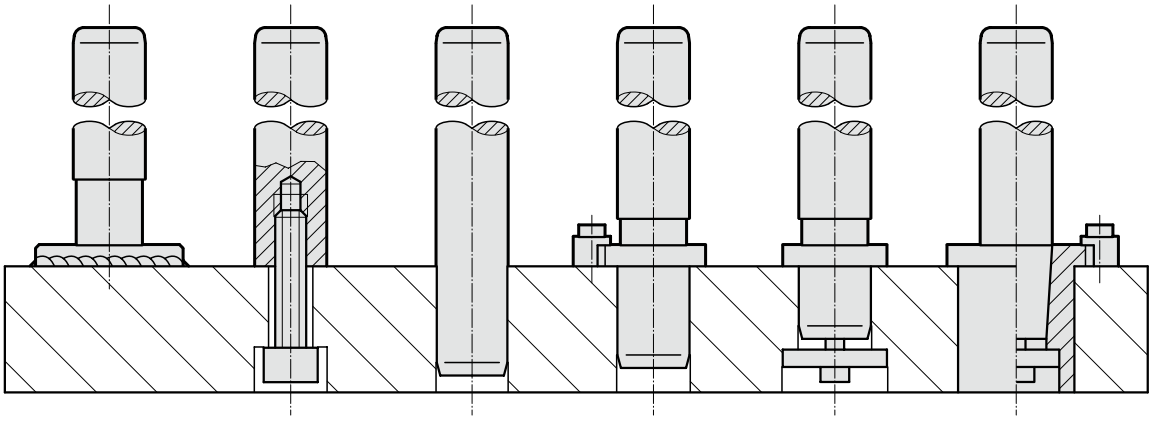

0	1	2	3	3/1	4
	202.21.	202.19.	2021.46.	2021.46. 2021.43.	2021.50. 2021.39. 210.39.

Deflection of Pillars

The practical applicatoin of these pillars demands a certain amount of re-thinking in regard of tool design. Deflection under radially imposed load is shown in the diagram of the right.

Mounting Instructions:

Coat head and threads of screws with molydenum disulfite.
Tighten and undo screw twice before final tightening with torque wrench.

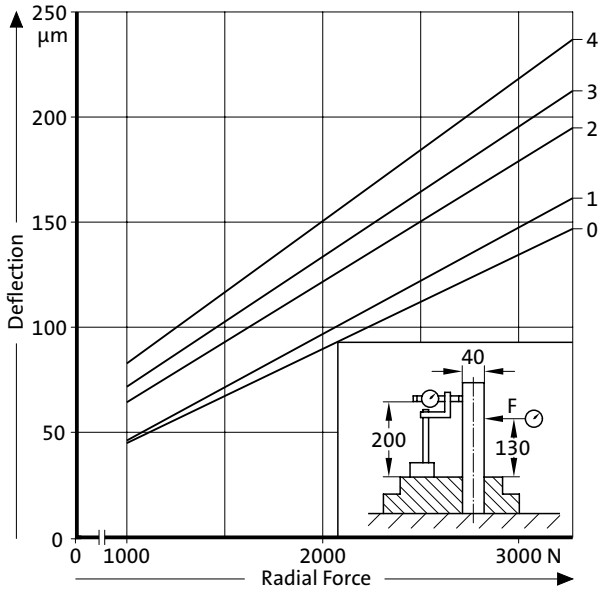

Bending equation

The transverse load resistance to tool guides is greatly influenced by the position of the guide pillar fixing.

For a tool with a spring-mounted die guide plate and pillar fixing at the top or bottom of the tool, the defelction and pillar bending values do not differ when the load is applied at the side since the distance (L) from the point of application of the force is the same.

Significantly better pillar bending values can be achieved by fixing the guide pillars in the guide plate, i.e. in the center of the pillar.

Since the distance (L/2) between the point of application of the force and the fixing surface is thus halved, the load-bearing capacity is increased by eight times.

In order to keep moving mass to a minimum and thereby minimize detrimental forces of inertia, FIBRO Stripper-Mounted Pillars are made with a hollow core. Rigidity of the die set - of paramount importance - remains unaffected by the hollow design.

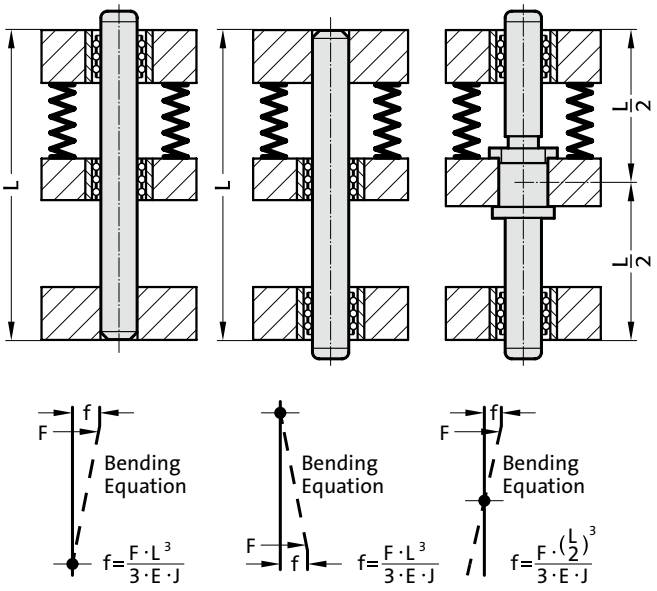

Ball cage, small dimension
Guide bush for ball bearing, small dimension



206.51.

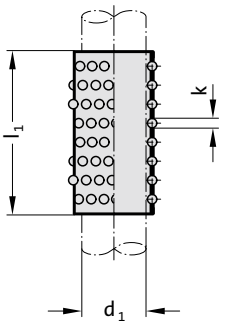

Material:
Cage: Brass
Balls: Steel hardened (DIN 5401)

206.51. Ball cage, small dimension

d_1	3	4	5	6	8
k	1	1	1	1	1
l_1	Total numbers of balls				
10	21	21	29	36	
15	35	35	49	61	61
20	49	49	69	69	69
25		64	89	89	89
30			109	109	109
40					149

Ordering Code (example):

Ball cage, small dimension		=206.51.	
Guide diameter d_1	5 mm	=	005.
Length l_1	30 mm	=	030
Order No		=206.51.	005. 030



206.54.

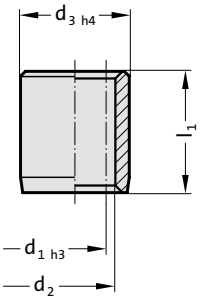

Material:
Roller bearing steel 100 Cr 6
Hardness: hardened to 60 + 4 HRC
Remarks: available in stainless steel on request

Execution:
Guide bush bores d_2 fine-honed to IT3

Note:
Assembly guide lines / Dimensional requirements and tolerances at the end of chapter D.

206.54. Guide bush for ball bearing, small dimension

d_1	3	4	5	6	8
d_2	5	6	7	8	10
d_3	7	8	10	11	14
l_1					
10	●	●	●		
15	●	●	●	●	●
20	●	●	●	●	●
25		●	●	●	●
30			●	●	●
35				●	●
40					●

Ordering Code (example):

Guide bush for ball bearing, small dimension		=206.54.	
Guide diameter d_1	5 mm	=	005.
Length l_1	10 mm	=	010
Order No		=206.54.	005. 010

subject to alterations

Guide pillar DIN 9825/ISO 9182-2

202.19.

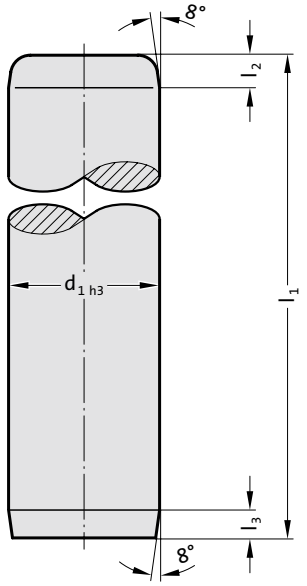

Mounting example

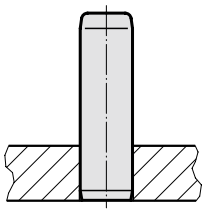



Material:

Steel, (Core strength: ≥ 900 N/mm²) surface hardened
Surface hardness: 60 + 3 HRC, Hardness penetration ≥ 1,8 mm (up to Ø 12, troughhardened)

Execution:

fine-ground and superfinished
Method of manufacturing entails that centre holes are not concentric with O.D.

Note:

Ø3 to Ø8 are not supplied classified.

Ø10 to Ø12 only available in tolerance range yellow = .10
Bearing clearance / Preloading see pairing classification at the beginning of chapter D.
Matching guide combinations, see selection matrix at the beginning of chapter D.
Assembly guide lines / Dimensional requirements and tolerances at the end of chapter D.
Tolerance range:
yellow = .10
green = .20
red = .30

202.19. Guide pillar DIN 9825/ISO 9182-2

d_1	3	4 5	6	8	10	11 12	15 16	19 20	24 25	30 32	38 40	48 50	60 63	80
l_2	2	2	2	3	3	3	4	4	6	6	6	8	8	8
l_3	2	2	2	3	3	3	3	3	3	3	3	3	3	3
l_1														
30	●													
40	●	●	●											
50	●	●	●	●										
60	●	●	●	●										
80	●	●	●	●		●								
90					●	●	●							
100		●	●	●	●	●	●	●	●					
112					●	●	●	●	●					
125			●	●	●	●	●	●	●	●				
140			●	●	●	●	●	●	●	●				
160			●	●		●	●	●	●	●	●			
180							●	●	●	●	●	●		
200							●	●	●	●	●	●		
224							●	●	●	●	●	●		
250							●	●	●	●	●	●	●	
280							●	●	●	●	●	●	●	●
315							●	●	●	●	●	●	●	●
355							●	●	●	●	●	●	●	●
400								●	●	●	●	●	●	●
450									●	●	●	●	●	●
500									●	●	●	●	●	●
550											●	●	●	●
600											●	●	●	●
700											●	●	●	●
800											●	●	●	●

Ordering Code (example):

Guide pillar DIN 9825/ISO 9182-2		=202.19.
Guide diameter d_1	25 mm	= 025.
Length l_1	224 mm	= 224.
Classification TOL	yellow	= 10
Order No		=202.19. 025.224.10

FIBRO

Guide Pillar with ball cage retainer



Mounting example

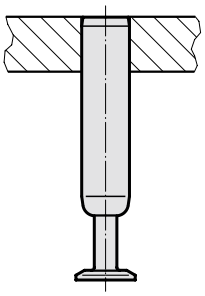

202.17.

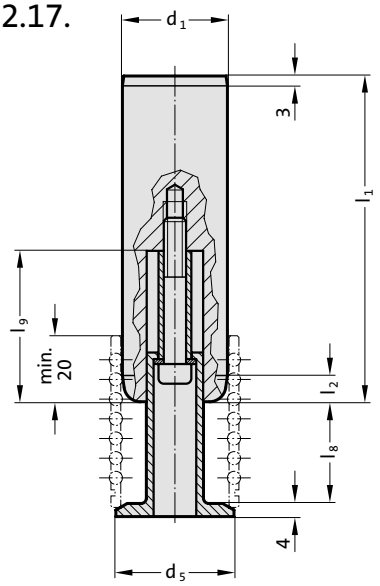

Material:

Steel, (Core strength: ≥ 900 N/mm²) surface hardened
Surface hardness: 60 + 3 HRC, Hardness penetration ≥ 1,8 mm

Execution:

fine-ground and superfinished

Note:

Preloading see pairing classification at the beginning of chapter D
Matching guide combinations, see selection matrix at the beginning of chapter D.
Assembly guide lines / Dimensional requirements and tolerances at the end of chapter D.
Dimensions of ball cage retainer see 202.91.
Tolerance range:
yellow = .10
green = .20
red = .30

202.17. Guide Pillar with ball cage retainer

d_1	38	40	48	50	60	63
d_5	42	44	52	54	64	67
l_2	6	6	8	8	8	8
KG (l_8 / l_9)						
1 (31 / 46)	●	●	●	●	●	●
2 (41 / 56)	●	●	●	●	●	●
3 (51 / 66)	●	●	●	●	●	●
4 (61 / 76)	●	●	●	●	●	●
5 (73 / 89)	●	●	●	●	●	●
l_1						
160	●	●				
180	●	●	●	●		
200	●	●	●	●		
224	●	●	●	●		
250	●	●	●	●	●	●
280	●	●	●	●	●	●
315	●	●	●	●	●	●
355	●	●	●	●	●	●
400	●	●	●	●	●	●
450	●	●	●	●	●	●
500	●	●	●	●	●	●
550	●	●	●	●	●	●
600	●	●	●	●	●	●
700	●	●	●	●	●	●
800	●	●	●	●	●	●

Ordering Code (example):

Guide Pillar with ball cage retainer		=202.17.
Guide diameter d_1	48 mm	= 048.
Length l_1	550 mm	= 550.
Cage retainer size KG	1	= 1.
Classification TOL	yellow	= 10
Order No		=202.17. 048.550.1. 10

subject to alterations

Guide pillar with internal thread on both sides, ~DIN 9825/~ISO 9182-2

202.22.

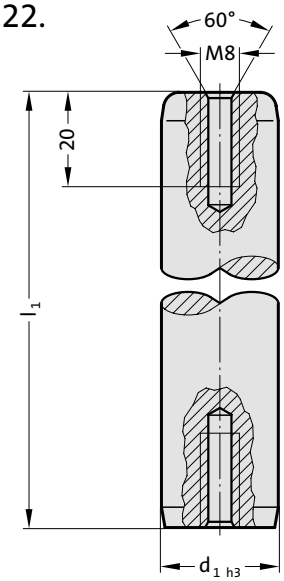

Mounting example

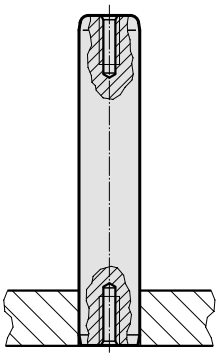



Material:

Steel, (Core strength: ≥ 900 N/mm²) surface hardened
Surface hardness: 60 + 3 HRC, Hardness penetration ≥ 1,8 mm

Execution:

fine-ground and superfinished
Method of manufacturing entails that centre holes are not concentric with O.D.

Note:

Bearing clearance / Preloading see pairing classification at the beginning of chapter D.
Matching guide combinations, see selection matrix at the beginning of chapter D.
Assembly guide lines / Dimensional requirements and tolerances at the end of chapter D.
Tolerance range:
yellow = .10
green = .20
red = .30

202.22. Guide pillar with internal thread on both sides, ~DIN 9825/~ISO 9182-2

d_1	15 16	19 20	24 25	30 32	38 40	48 50	60 63	80
l_2	4	4	6	6	6	8	8	8
l_1								
90	●							
100	●	●	●					
112	●	●	●					
125	●	●	●	●				
140	●	●	●	●				
160	●	●	●	●	●			
180	●	●	●	●	●	●		
200	●	●	●	●	●	●		
224	●	●	●	●	●	●		
250	●	●	●	●	●	●	●	
280	●	●	●	●	●	●	●	●
315	●	●	●	●	●	●	●	●
355	●	●	●	●	●	●	●	●
400		●	●	●	●	●	●	●
450			●	●	●	●	●	●
500			●	●	●	●	●	●
550					●	●	●	●
600					●	●	●	●
700					●	●	●	●
800					●	●	●	●

Ordering Code (example):

Guide pillar with internal thread on both sides, ~DIN 9825/~ISO 9182-2		=202.22.
Guide diameter d_1	32 mm	= 032.
Length l_1	200 mm	= 200.
Classification TOL	yellow	= 10
Order No		=202.22. 032.200.10

Guide pillar with internal thread on bottom, ~DIN 9825/~ISO 9182-2



Mounting example

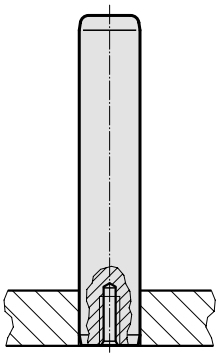

202.23.

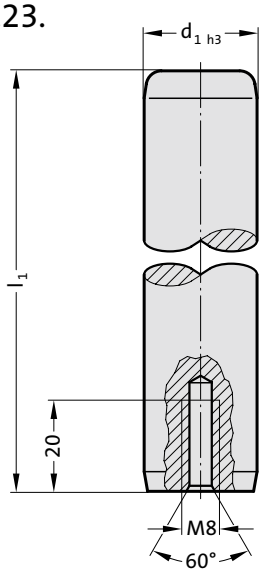

Material:

Steel, (Core strength: ≥ 900 N/mm²) surface hardened
Surface hardness: 60 + 3 HRC, Hardness penetration ≥ 1,8 mm

Execution:

fine-ground and superfinished
Method of manufacturing entails that centre holes are not concentric with O.D.

Note:

Bearing clearance / Preloading see pairing classification at the beginning of chapter D.
Matching guide combinations, see selection matrix at the beginning of chapter D.
Assembly guide lines / Dimensional requirements and tolerances at the end of chapter D.
Tolerance range:
yellow = .10
green = .20
red = .30

202.23. Guide pillar with internal thread on bottom, ~DIN 9825/~ISO 9182-2

d_1	15 16	19 20	24 25	30 32	38 40	48 50	60 63	80
l_2	4	4	6	6	6	8	8	8
l_1								
90	●							
100	●	●	●					
112	●	●	●					
125	●	●	●	●				
140	●	●	●	●				
160	●	●	●	●	●			
180	●	●	●	●	●	●		
200	●	●	●	●	●	●		
224	●	●	●	●	●	●		
250	●	●	●	●	●	●	●	
280	●	●	●	●	●	●	●	●
315	●	●	●	●	●	●	●	●
355	●	●	●	●	●	●	●	●
400		●	●	●	●	●	●	●
450			●	●	●	●	●	●
500			●	●	●	●	●	●
550					●	●	●	●
600					●	●	●	●
700					●	●	●	●
800					●	●	●	●

Ordering Code (example):

Guide pillar with internal thread on bottom, ~DIN 9825/~ISO 9182-2		=202.23.
Guide diameter d_1	32 mm =	032.
Length l_1	200 mm=	200.
Classification TOL	yellow =	10
Order No		=202.23. 032.200.10

subject to alterations

Guide pillar with internal thread on top, ~DIN 9825/~ISO 9182-2

202.24.

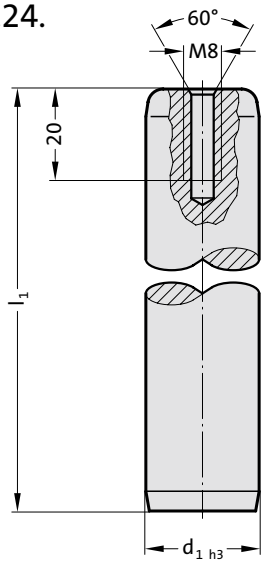

Mounting example

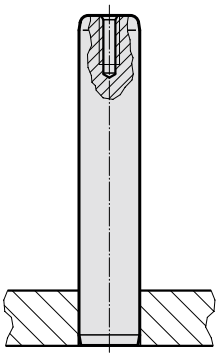



Material:

Steel, (Core strength: ≥ 900 N/mm²) surface hardened
Surface hardness: 60 + 3 HRC, Hardness penetration ≥ 1,8 mm

Execution:

fine-ground and superfinished
Method of manufacturing entails that centre holes are not concentric with O.D.

Note:

Bearing clearance / Preloading see pairing classification at the beginning of chapter D.
Matching guide combinations, see selection matrix at the beginning of chapter D.
Assembly guide lines / Dimensional requirements and tolerances at the end of chapter D.
Tolerance range:
yellow = .10
green = .20
red = .30

202.24. Guide pillar with internal thread on top, ~DIN 9825/~ISO 9182-2

d_1	15 16	19 20	24 25	30 32	38 40	48 50	60 63	80
l_2	4	4	6	6	6	8	8	8
l_1								
90	●							
100	●	●	●					
112	●	●	●					
125	●	●	●	●				
140	●	●	●	●				
160	●	●	●	●	●			
180	●	●	●	●	●	●		
200	●	●	●	●	●	●		
224	●	●	●	●	●	●		
250	●	●	●	●	●	●	●	
280	●	●	●	●	●	●	●	●
315	●	●	●	●	●	●	●	●
355	●	●	●	●	●	●	●	●
400		●	●	●	●	●	●	●
450			●	●	●	●	●	●
500			●	●	●	●	●	●
550					●	●	●	●
600					●	●	●	●
700					●	●	●	●
800					●	●	●	●

Ordering Code (example):

Guide pillar with internal thread on top, ~DIN 9825/~ISO 9182-2		=202.24.	
Guide diameter d_1	32 mm	=	032.
Length l_1	200 mm	=	200.
Classification TOL	yellow	=	10
Order No		=202.24. 032.200.10	

FIBRO

Guide pillar endwise bolt-on type, ~DIN 9825/~ISO 9182-2



Hole pattern for column (pillar) fastening

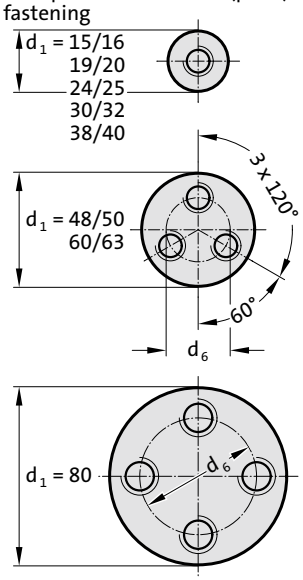

202.21.

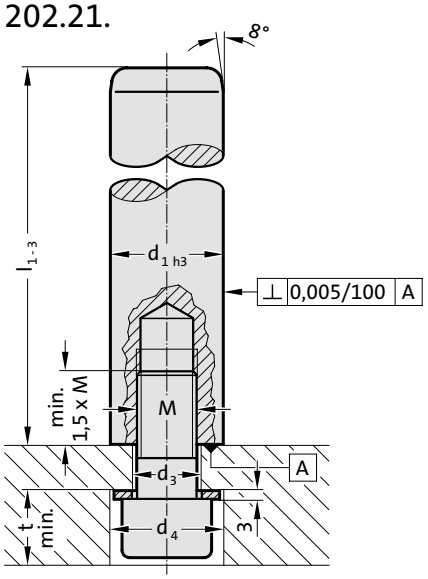

Material:

Steel, (Core strength: ≥ 900 N/mm²) surface hardened
Surface hardness: 60 + 3 HRC, Hardness penetration ≥ 1,8 mm

Execution:

fine precision ground
End face square within 0.005 mm in 100 mm

Note:

Bearing clearance / Preloading see pairing classification at the beginning of chapter D.
Matching guide combinations, see selection matrix at the beginning of chapter D.
Tolerance range:
yellow = .10
green = .20
red = .30

202.21. Guide pillar endwise bolt-on type, ~DIN 9825/~ISO 9182-2

d_1	15 16	19 20	24 25	30 32	38 40	48 50	60 63	80
d_3	9	11	14	18	18	14	18	18
d_4	17	20	22	28	28	22	28	28
d_6	-	-	-	-	-	28	34	54
t	12	14	16	20.5	20.5	16	20.5	20.5
M	8	10	12	16	16	12	16	16
Cap screw	M8x35	M10x40	M12x40	M16x40	M16x40	M12x50	M16x60	M16x60
Tightening torque [Nm]	21	37	85	150	150	85	200	200
l_1								
90	●							
100	●	●	●					
112	●	●	●					
125	●	●	●	●				
140	●	●	●	●				
160	●	●	●	●	●			
180	●	●	●	●	●	●		
200	●	●	●	●	●	●		
224	●	●	●	●	●	●		
250	●	●	●	●	●	●	●	
280	●	●	●	●	●	●	●	●
315	●	●	●	●	●	●	●	●
355	●	●	●	●	●	●	●	●
400		●	●	●	●	●	●	●
450			●	●	●	●	●	●
500			●	●	●	●	●	●
550					●	●	●	●
600					●	●	●	●
700					●	●	●	●
800					●	●	●	●

Ordering Code (example):

Guide pillar endwise bolt-on type, ~DIN 9825/~ISO 9182-2		=202.21.
Guide diameter d_1	32 mm	= 032.
Length l_1	200 mm	= 200.
Classification TOL	yellow	= 10
Order No		=202.21. 032.200.10

subject to alterations

Guide pillar endwise bolt-on type with ball cage, ~DIN 9825/~ISO 9182-2



202.55.

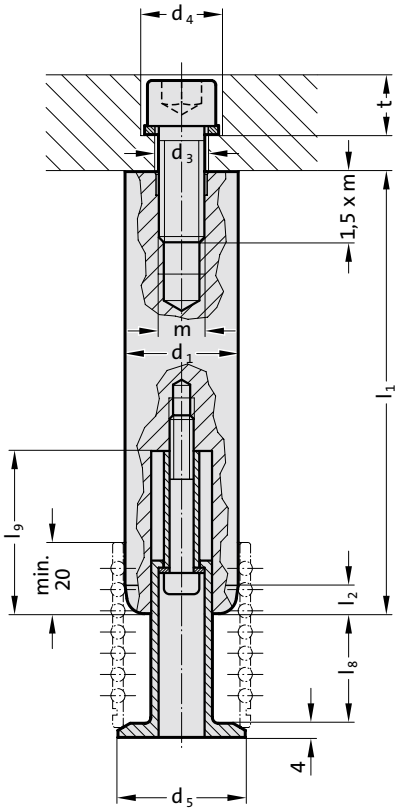

Material:

Steel, (Core strength: ≥ 900 N/mm²) surface hardened
Surface hardness: 60 + 3 HRC, Hardness penetration ≥ 1,8 mm

Execution:

fine precision ground
End face square within 0.005 mm in 100 mm

Note:

Preloading see pairing classification at the beginning of chapter D
Matching guide combinations, see selection matrix at the beginning of chapter D.
Dimensions of ball cage retainer see 202.91.
Tolerance range:
yellow = .10
green = .20
red = .30

Hole pattern for column (pillar) fastening

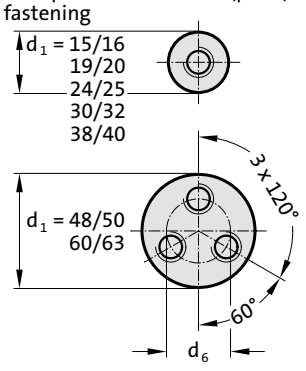

subject to alterations

Guide pillar endwise bolt-on type with ball cage, ~DIN 9825/~ISO 9182-2

202.55. Guide pillar endwise bolt-on type with ball cage, ~DIN 9825/~ISO 9182-2

d_1	38	40	48	50	60	63
d_3	18	18	14	14	18	18
d_4	28	28	22	22	28	28
d_5	42	44	52	54	64	67
d_6	-	-	28	28	34	34
t	20.5	20.5	16	16	20.5	20.5
m	16	16	12	12	16	16
Cap screw	M16x40	M16x40	M12x50	M12x50	M16x60	M16x60
Tightening torque [Nm]	150	150	85	85	200	200
KG (l_8 / l_9)						
1 (31 / 46)	●	●	●	●	●	●
2 (41 / 56)	●	●	●	●	●	●
3 (51 / 66)	●	●	●	●	●	●
4 (61 / 76)	●	●	●	●	●	●
5 (73 / 89)	●	●	●	●	●	●
l_1						
160	●	●				
180	●	●	●	●		
200	●	●	●	●		
224	●	●	●	●		
250	●	●	●	●	●	●
280	●	●	●	●	●	●
315	●	●	●	●	●	●
355	●	●	●	●	●	●
400	●	●	●	●	●	●
450	●	●	●	●	●	●
500	●	●	●	●	●	●
550	●	●	●	●	●	●
600	●	●	●	●	●	●
700	●	●	●	●	●	●
800	●	●	●	●	●	●



Ordering Code (example):

Guide pillar endwise bolt-on type with ball cage, ~DIN 9825/~ISO 9182-2		=202.55.	
Guide diameter d_1	48 mm	=	048.
Length l_1	550 mm	=	550.
Cage retainer size KG	1	=	1.
Classification TOL	yellow	=	10
Order No		=202.55. 048.550.1. 10	

Guide pillar "ECO-Line", ~DIN 9825/~ISO 9182-2



Mounting example

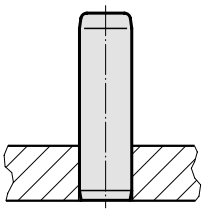

202.29.

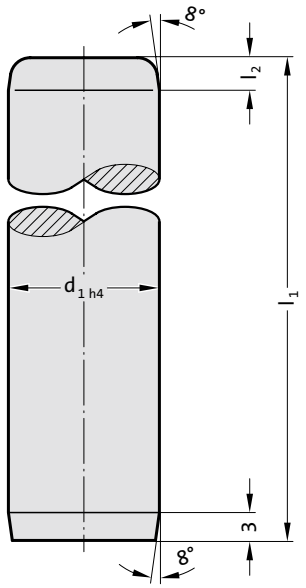

Material:

Steel, surface hardened
Surface hardness: 60 + 3 HRC, Hardness penetration ≥ 1,8 mm

Execution:

ground
Method of manufacturing entails that centre holes are not concentric with O.D.

Note:

Guide pillars only recommended for use with sliding guides!
Matching guide combinations, see selection matrix at the beginning of chapter D.
Assembly guide lines / Dimensional requirements and tolerances at the end of chapter D.

202.29. Guide pillar "ECO-Line", ~DIN 9825/~ISO 9182-2

d_1	15 16	19 20	24 25	30 32	38 40	48 50	60 63	80
l_2	4	4	6	6	6	8	8	8
l_1								
90	●							
100	●	●	●					
112	●	●	●					
125	●	●	●	●				
140	●	●	●	●				
160	●	●	●	●	●			
180	●	●	●	●	●	●		
200	●	●	●	●	●	●		
224	●	●	●	●	●	●		
250	●	●	●	●	●	●	●	
280	●	●	●	●	●	●	●	●
315	●	●	●	●	●	●	●	●
355	●	●	●	●	●	●	●	●
400		●	●	●	●	●	●	●
450			●	●	●	●	●	●
500			●	●	●	●	●	●
550					●	●	●	●
600					●	●	●	●
700					●	●	●	●
800					●	●	●	●

Ordering Code (example):

Guide pillar "ECO-Line", ~DIN 9825/~ISO 9182-2		=	202.29.
Guide diameter d_1	32 mm	=	032.
Length l_1	125 mm	=	125
Order No		=	202.29. 032.125

subject to alterations

Guide pillar "ECO-Line" endwise bolt-on type, ~DIN 9825/~ISO 9182-2



202.31.

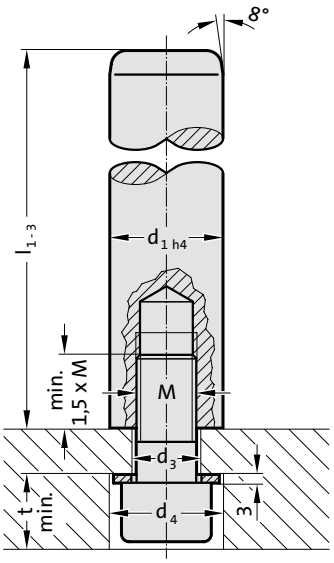

Material:

Steel, surface hardened
Surface hardness: 60 + 3 HRC, Hardness penetration ≥ 1,8 mm

Execution:

ground

Note:

Guide pillars only recommended for use with sliding guides!
Matching guide combinations, see selection matrix at the beginning of chapter D.

Hole pattern for column (pillar) fastening

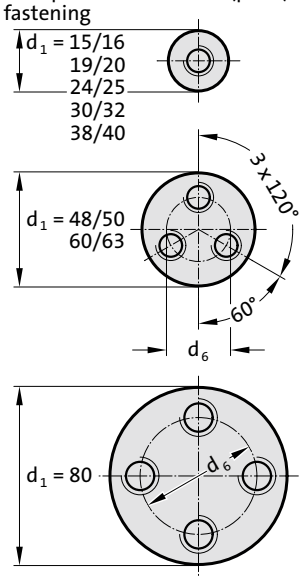

subject to alterations

Guide pillar "ECO-Line" endwise bolt-on type, ~DIN 9825/~ISO 9182-2

202.31. Guide pillar "ECO-Line" endwise bolt-on type, ~DIN 9825/~ISO 9182-2

d_1	15 16	19 20	24 25	30 32	38 40	48 50	60 63	80
d_3	9	11	14	18	18	14	18	18
d_4	17	20	22	28	28	22	28	28
d_6	-	-	-	-	-	28	34	54
t	12	14	16	20.5	20.5	16	20.5	20.5
M	8	10	12	16	16	12	16	16
Cap screw	M8x35	M10x40	M12x40	M16x40	M16x40	M12x50	M16x60	M16x60
Tightening torque [Nm]	21	37	85	150	150	85	200	200
l_1								
90	●							
100	●	●	●					
112	●	●	●					
125	●	●	●	●				
140	●	●	●	●				
160	●	●	●	●	●			
180	●	●	●	●	●	●		
200	●	●	●	●	●	●		
224	●	●	●	●	●	●		
250	●	●	●	●	●	●	●	
280	●	●	●	●	●	●	●	●
315	●	●	●	●	●	●	●	●
355	●	●	●	●	●	●	●	●
400		●	●	●	●	●	●	●
450			●	●	●	●	●	●
500			●	●	●	●	●	●
550					●	●	●	●
600					●	●	●	●
700					●	●	●	●
800					●	●	●	●



Ordering Code (example):

Guide pillar "ECO-Line" endwise bolt-on type, ~DIN 9825/~ISO 9182-2		=202.31.	
Guide diameter d_1	32 mm	=	032.
Length l_1	125 mm	=	125
Order No		=202.31. 032.125	

Guide pillar, conical, DIN 9825/ISO 9182-4/AFNOR



2021.50.

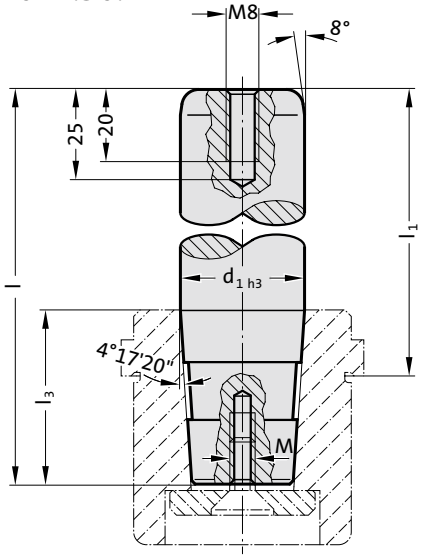

Description:

FIBRO demountable pillars with conical shaft 2021.50. are recommended where die sharpening etc. demands frequent demounting and re-fitting.

Material:

Steel, (Core strength: ≥ 900 N/mm²) surface hardened
Surface hardness: 60 + 3 HRC, Hardness penetration ≥ 1,8 mm

Execution:

fine-ground and superfinished
Method of manufacturing entails that centre holes are not concentric with O.D.

Note:

Matching retaining bushes 2021.39./210.39. and retaining discs 2021.53./202.53. to be ordered separately.
Preloading see pairing classification at the beginning of chapter D
Matching guide combinations, see selection matrix at the beginning of chapter D.
Tolerance range:
yellow = .10
green = .20
red = .30

Mounting example

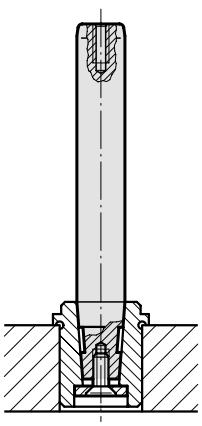

subject to alterations

Guide pillar, conical, DIN 9825/ISO 9182-4/AFNOR

2021.50. Guide pillar, conical, DIN 9825/ISO 9182-4/AFNOR

d_1	16	19 20	24 25	25	30 32	32	38 40	40	48 50	50	60 63	63	63
d_5	22	22	25	25	32	32	40	40	50	50	63	63	63
M	6	6	8	8	8	8	8	8	10	10	12	12	12
l_3	28	38	35	45	48	61	48	61	58	78	69	77	97
l_1	l												
82	100												
95	113												
100		126	123										
112	130	138	135		145								
125	143	151	148	158	158		158						
140		166	163		173	186	173		180				
160		186	183	193	193	206	193	206	200		211		
180		206	203	213	213	226	213	226	220		231	237	
200		226	223	233	233		233		240	260	251	257	
224			247		257	270	257	270	264		275		
250			273		283		283	296	290	310	301	307	327
280					313		313		320	340	331	337	
315							348		355	375	366	372	392
355									395		406		432
400													477

Ordering Code (example):

Guide pillar, conical, DIN 9825/ISO 9182-4/AFNOR		=	2021.50.
Guide diameter d_1	38 mm	=	038.
Guide length l_1	180 mm	=	180.
Cone length l_3	48 mm	=	048.
Classification TOL	yellow	=	10
Order No		=	2021.50.038.180.048.10

Demountable guide pillar, conical, with ball cage retainer, DIN 9825/ISO 9182-4/AFNOR



2021.58.

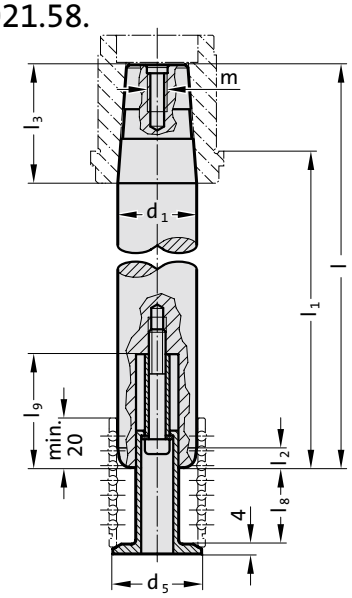

Description:

FIBRO demountable pillars with conical shaft 2021.58. are recommended where die sharpening etc. demands frequent demounting and re-fitting.

Material:

Steel, (Core strength: ≥ 900 N/mm²) surface hardened
Surface hardness: 60 + 3 HRC, Hardness penetration ≥ 1,8 mm

Execution:

fine-ground and superfinished

Note:

Dimensions of ball cage retainer see 202.91.
Matching retaining bushes 2021.39./210.39. and retaining discs 2021.53./202.53. to be ordered separately.
Preloading see pairing classification at the beginning of chapter D
Matching guide combinations, see selection matrix at the beginning of chapter D.
Tolerance range:
yellow = .10
green = .20
red = .30

Mounting example

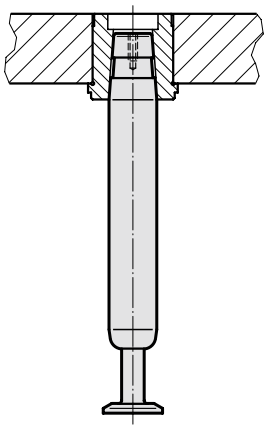

subject to alterations

Demountable guide pillar, conical, with ball cage retainer, DIN 9825/ISO 9182-4/AFNOR

2021.58. Demountable guide pillar, conical, with ball cage retainer, DIN 9825/ISO 9182-4/AFNOR

d_1	38	38	40	40	48	50	50	60	63	63	63
d_5	42	42	44	44	52	54	54	64	67	67	67
m	8	8	8	8	10	10	8	12	12	12	12
l_3	48	48	48	61	58	58	78	69	69	77	97
KG (l_8 / l_9)											
1 (31 / 46)	●		●	●	●	●	●	●	●	●	●
2 (41 / 56)		●	●	●	●	●	●	●	●	●	●
3 (51 / 66)		●	●	●	●	●	●	●	●	●	●
4 (61 / 76)		●	●	●	●	●	●	●	●	●	●
5 (73 / 89)		●	●	●	●	●	●	●	●	●	●
l_1	l										
125	158	158	158								
140	173	173	173		180	180					
160	193	193	193	206	200	200		211	211		
180	213	213	213	226	220	220		231	231	237	
200	233	233	233		240	240	260	251	251	257	
224	257	257	257	270	264	264		275	275		
250	283	283	283	296	290	290	310	301	301	307	327
280	313	313	313		320	320	340	331	331	337	
315	348	348	348		355	355	375	366	366	372	392
355					395	395		406	406		432
400											477

Ordering Code (example):

Demountable guide pillar, conical, with ball cage retainer, DIN 9825/ISO 9182-4/AFNOR		=	2021.58.
Guide diameter d_1	50 mm	=	050.
Guide length l_1	200 mm	=	200.
Cone length l_3	58 mm	=	058.
Cage retainer size KG	1	=	1
Classification TOL	yellow	=	1
Order No		=	2021.58.050.200.058.11

Retaining disc with countersunk head cap screw, DIN 9825/ISO 9182-4
Retaining disc with socket cap screw, ~ AFNOR



Mounting example

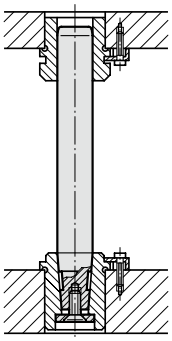

2021.53.

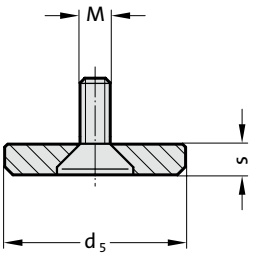

Material:
Retaining disc: Steel, burnished
Countersunk head cap screw DIN 7991/ISO 10642

Note:
Has to be ordered separately to guide pillar, conical according to DIN 9825 / ISO 9182-4 2021.50. or 2021.58.

2021.53. Retaining disc with countersunk head cap screw, DIN 9825/ISO 9182-4

Order No	Nominal-ø	Pillar-ø	d_5	s	M
2021.53.020	20	19/20	22	3	M6
2021.53.025	25	24/25	25	3	M8
2021.53.032	32	30/32	32	3	M8
2021.53.040	40	38/40	40	5	M8
2021.53.050	50	48/50	50	5	M10
2021.53.063	63	60/63	63	6	M12



Mounting example

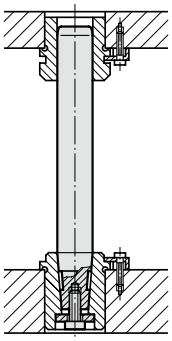

202.53.

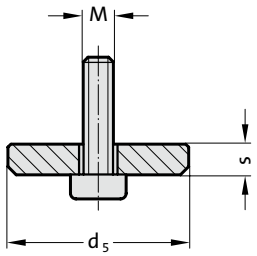

Material:
Retaining disc: Steel, burnished
Socket head cap screw DIN 6912

Note:
Has to be ordered separately to guide pillar, conical according to AFNOR 2021.50. or 2021.58.

202.53. Retaining disc with socket cap screw, ~ AFNOR

Order No	Pillar-ø	d_5	s	M
202.53.016	16	18	3	M6
202.53.020	20	22	3	M6
202.53.025	25	25	4	M8
202.53.032	32	32	4	M8
202.53.040	40	40	4	M8
202.53.050	50	50	5	M10
202.53.063	63	63	6	M12

Retaining bush for guide pillar conical 2021.50., DIN 9825/ISO 9182-4

2021.39.

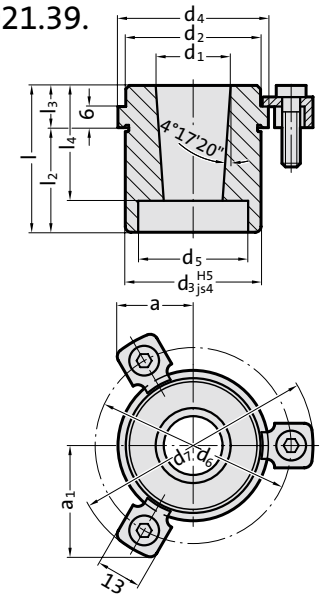

Mounting example

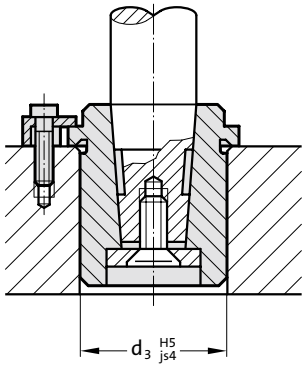



Material:

16 MnCr5,
case hardened 58 ± 2 HRC
Hardness penetration: ≥ 0,8 mm

Execution:

Retaining bore, outside diameter and shoulder precision ground.

Note:

Outside diameter d_3 same as that of guide bushes 2081. and 2091.
The attachment is with 3 Screw clamp, from Ø d_1 = 38 with 4 Screw clamp , which are included in delivery (Order No: 207.45 - Screw clamp incl. socket cap screw DIN 6912, Head Ø 13).
Assembly guide lines / Dimensional requirements and tolerances at the end of chapter D.

2021.39. Retaining bush for guide pillar conical 2021.50., DIN 9825/ISO 9182-4

d_1	19 20	24 25	30 32	38 40	48 50	60 63
d_2	32	40	48	58	70	85
d_3	32	40	48	58	70	85
d_4	40	48	56	66	80	95
d_5	23	26	33	41	51	64
d_6	53	60	67	77	91	106
d_7	65.7	72.7	79.7	89.7	103.7	118.7
a	20.9	22.65	24.4	35.3	40.2	45.5
a_1	30.3	33.4	36.4	35.3	40.2	45.5
l	42 49	49 59	52 62	62 75	65 78	78 95
l_2	30 37	37 47	37 47	47 60	47 60	60 77
l_3	12	12	15	15	18	18
l_4	39	36	49	49	59	70

Ordering Code (example):

Retaining bush for guide pillar conical 2021.50., DIN 9825/ISO 9182-4		=2021.39.
Nominal diameter d_1	38 mm=	038.
Installation length l_2	47 mm=	047
Order No		=2021.39.038.047

Retaining bush for guide pillar conical 2021.50.,~ AFNOR



Mounting example

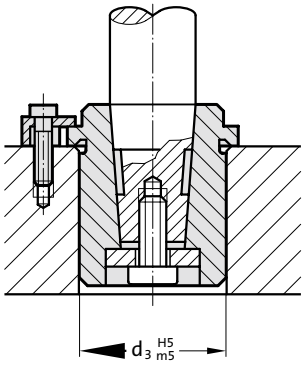

210.39.

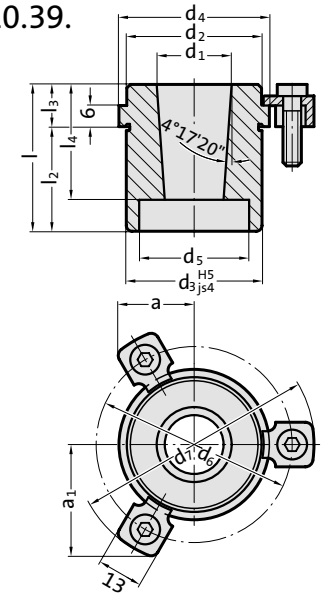

Material:

16 MnCr5,
case hardened 58 ± 2 HRC
Hardness penetration: ≥ 0,8 mm

Execution:

Retaining bore, outside diameter and shoulder precision ground.

Note:

Outside diameter d_3 same as that of guide bushes 210.
The attachment is with 3 Screw clamp, from Ø d_1 = 38 with 4 Screw clamp , which are included in delivery (Order No: 207.45 - Screw clamp incl. socket cap screw DIN 6912, Head Ø 13).
Assembly guide lines / Dimensional requirements and tolerances at the end of chapter D.

210.39. Retaining bush for guide pillar conical 2021.50.,~ AFNOR

d_1	16	20	25	32	40	50	63
d_2	29	32	41	51	65	84	100
d_3	28	32	40	50	63	80	90
d_4	32	36	45	56	70	90	110
d_5	19	23	26	33	41	51	64
d_6	45	49	57	67	81	101	121
d_7	57.7	61.7	69.7	79.7	93.7	113.7	133.7
a	18.9	19.9	21.9	24.4	36	43	50.1
a_1	26.9	28.6	32.1	36.4	36	43	50.1
l	40	50	50 60	63 76	63 76	79 96	98 118
l_2	30	38	38 48	48 61	48 61	61 78	78 98
l_3	10	12	12	15	15	18	20
l_4	30	40	37 47	50 63	50 63	63 80	79 99

Ordering Code (example):

Retaining bush for guide pillar conical 2021.50.,~ AFNOR		=210.39.
Nominal diameter d_1	40 mm=	040.
Installation length l_2	48 mm=	048
Order No		=210.39. 040.048

subject to alterations

Guide pillar for large tools, DIN 9833/ISO 9182-3

2022.19.



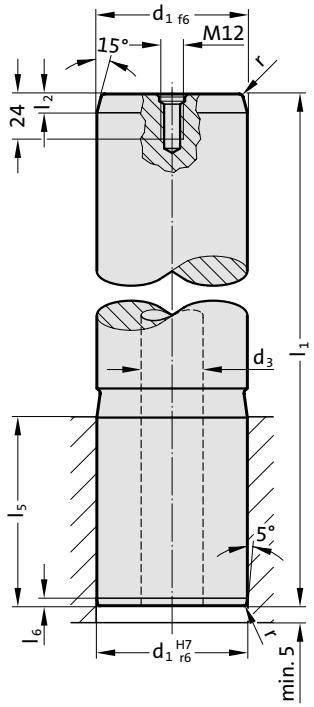

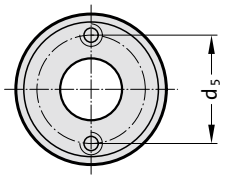

Material:

Steel, surface hardened
Surface hardness: 60 + 4 HRC, Hardness penetration 1,5 + 1 mm

Execution:

ground
up to Ø d_1 = 80 without central hole
by Ø d_1 = 80 with 1 lifting thread M12
from Ø d_1 = 100 with central hole (through) and with 2 lifting threads M12

Note:

The guide pillar is only recommended for use with solid lubricants.
Matching guide combinations, see selection matrix at the beginning of chapter D.
Assembly guide lines / Dimensional requirements and tolerances at the end of chapter D.

2022.19. Guide pillar for large tools, DIN 9833/ISO 9182-3

d_1	25	32	40	50	63	80	100	125	160
d_3	-	-	-	-	-	-	50	65	95
d_5	-	-	-	-	-	-	72	90	132
r	2	2	2	2.5	2.5	3	3	4	4
l_2	8	8	8	10	10	10	10	12	12
l_5	40	45	56	70	80	100	125	140	180
l_6	4	4	4	4	4	4	4	5	5
l_1									
125	●	●							
140	●	●	●						
160	●	●	●	●					
180	●	●	●	●	●				
200	●	●	●	●	●				
224	●	●	●	●	●	●			
250		●	●	●	●	●	●		
280			●	●	●	●	●		
315				●	●	●	●	●	
355				●	●	●	●	●	
400					●	●	●	●	●
450						●	●	●	●
500						●	●	●	●
560									●

Ordering Code (example):

Guide pillar for large tools, DIN 9833/ISO 9182-3		=2022.19.
Guide diameter d_1	63 mm	= 063.
Length l_1	180 mm	= 180
Order No		=2022.19.063.180

Guide pillar with 5° pilot taper, to VW-Standard



Mounting example

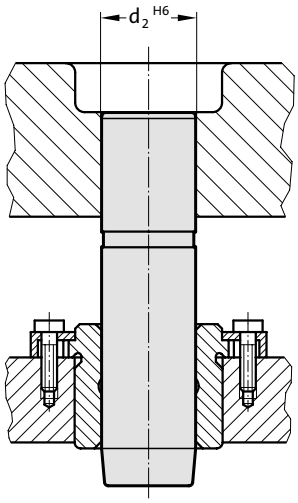

2022.13.

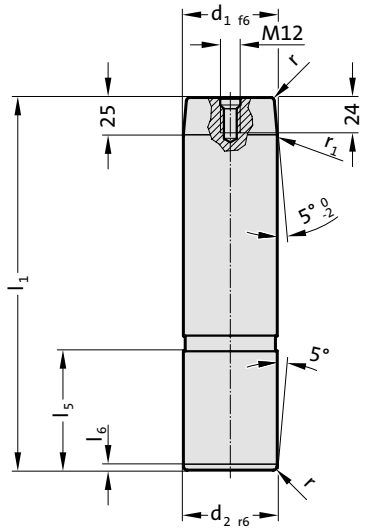

Material:

Steel, surface hardened
Surface hardness: 60 + 4 HRC, Hardness penetration 1,5 + 1 mm

Execution:

precision ground
by Ø d_1 = 80 with 1 lifting thread M12

Note:

The guide pillar is only recommended for use with solid lubricants.
Matching guide combinations, see selection matrix at the beginning of chapter D.
Assembly guide lines / Dimensional requirements and tolerances at the end of chapter D.

Application:

Floating support in upper half of trimming tools.

2022.13. Guide pillar with 5° pilot taper, to VW-Standard

d_1	40	50	63	80
d_2	40	50	63	80
l_5	56	70	80	100
l_6	4	4	4	4
r	2	2.5	2.5	3
r_1	3	5	6	8
l_1				
140	●			
160	●	●		
180	●	●	●	
200	●	●	●	
224	●	●	●	●
250	●	●	●	●
280	●	●	●	●
315		●	●	●
355		●	●	●
400			●	●

Ordering Code (example):

Guide pillar with 5° pilot taper, to VW-Standard		=	2022.13.
Guide diameter d_1	63 mm	=	063.
Length l_1	180 mm	=	180
Order No		=	2022.13.063.180

subject to alterations

Guide pillar with pilot taper, VDI 3356

2022.15.



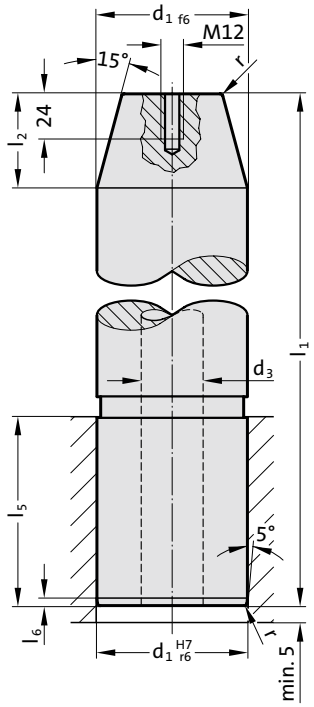

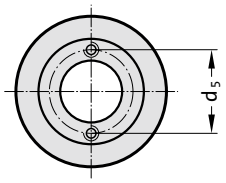

Material:
Steel, surface hardened
Surface hardness: 60 + 4 HRC, Hardness penetration 1,5 + 1 mm

Execution:
ground
Ø d_1 = 80 without central hole with 1 lifting thread M12
from Ø d_1 = 100 with central hole (through) and with 2 lifting threads M8

Note:
The guide pillar is only recommended for use with solid lubricants.
Matching guide combinations, see selection matrix at the beginning of chapter D.
Assembly guide lines / Dimensional requirements and tolerances at the end of chapter D.

2022.15. Guide pillar with pilot taper, VDI 3356

d_1	80	100	125	160
d_3	-	50	65	95
d_5	-	62	82	119
r	3	3	4	4
l_2	50	50	50	50
l_5	4	4	5	5
l_6	100	125	140	180
l_1				
280	●			
315	●	●		
355	●	●	●	
400	●	●	●	
450	●	●	●	●
500			●	●
560				●

Ordering Code (example):

Guide pillar with pilot taper, VDI 3356		=2022.15.
Guide diameter d_1	125 mm =	125.
Length l_1	355 mm =	355
Order No		=2022.15.125.355

Guide pillar with groove, to VW



2022.17.

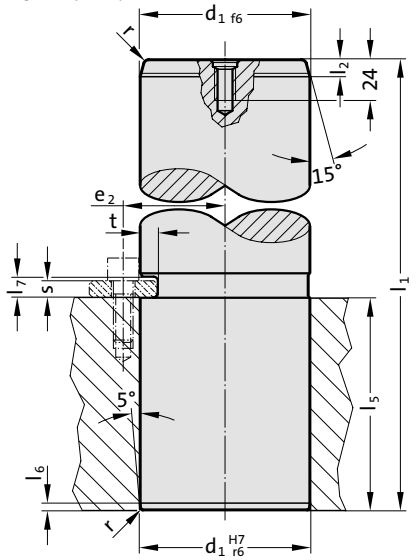

Material:

Steel, surface hardened
Surface hardness: 60 + 4 HRC, Hardness penetration 1,5 + 1 mm

Execution:

ground
by Ø d_1 = 80 with 1 lifting thread M12

Note:

Secure with locating plate 2022.40.1.
The guide pillar is only recommended for use with solid lubricants.
Matching guide combinations, see selection matrix at the beginning of chapter D.
Assembly guide lines / Dimensional requirements and tolerances at the end of chapter D.

2022.17. Guide pillar with groove, to VW

d_1	25	32	40	50	63	80
l_2	8	8	8	10	10	10
l_5	40	45	56	70	80	100
l_6	4	4	4	4	4	4
l_7	7	7	10	10	12	12
r	2	2	2	2.5	2.5	3
e_2	20.5	24	29.5	33.5	43	50
t	3	3	4	4	6.5	8
l_1						
125	●	●				
140	●	●	●			
160	●	●	●	●		
180	●	●	●	●	●	
200	●	●	●	●	●	
224	●	●	●	●	●	●
250		●	●	●	●	●
280			●	●	●	●
315				●	●	●
355				●	●	●
400					●	●
450						●
500						●

Ordering Code (example):

Guide pillar with groove, to VW		=2022.17.	
Guide diameter d_1	50 mm	=	050.
Length l_1	160 mm	=	160
Order No		=2022.17.050.160	

subject to alterations

Locating plate for guide pillar, to VW

2022.40.1.

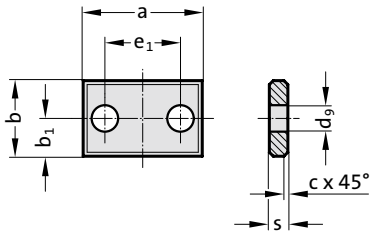



2022.40.1. Locating plate for guide pillar, to VW

Order No	Pillar-ø	a	b	s	c	b_1	e_1	d_9
2022.40.1.02	25 u. 32	40	20	5	1	10	20	9
2022.40.1.04	40 u. 50	48	25	8	2	12.5	24	11
2022.40.1.06	63 u. 80	60	34	10	2	17	30	14

Material:
Steel

Note:
Screws not included!

Fixing:
Use socket cap screws DIN EN ISO 4762.

Ordering Code (example):

Locating plate for guide pillar, to VW	=2022.40.1.	
Nominal size NENN	04 =	04
Order No	=2022.40.1.	04

FIBRO

Guide pillar with retaining ring groove, ~AFNOR



2022.25.

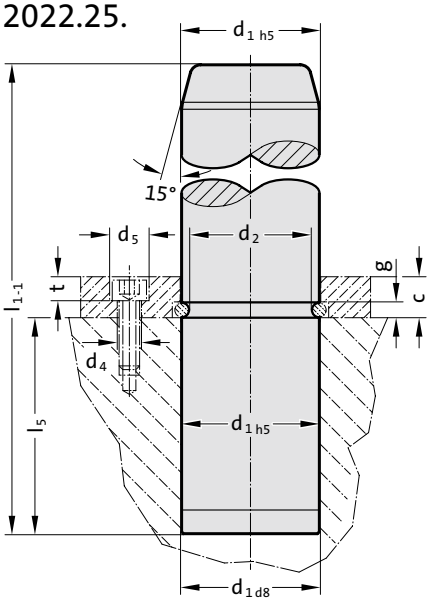

Material:

Steel, surface hardened
Surface hardness: 60 + 4 HRC, Hardness penetration 1,5 + 1 mm

Execution:

ground

Note:

The guide pillar is only recommended for use with solid lubricants.
Matching guide combinations, see selection matrix at the beginning of chapter D.
Assembly guide lines / Dimensional requirements and tolerances at the end of chapter D.

Fixing:

Clamping flange with retaining ring, without screws, 2073.46.□□□ order separately.

2022.25. Guide pillar with retaining ring groove, ~AFNOR

d_1	25	32	40	50	63	80	100
d_2	25	32	40	50	63	80	80
g	2.7	4.2	4.2	4.2	6.2	6.2	6.2
l_5	25	32	63	80	100	125	160
l_1							
100	●						
125	●	●					
140	●	●					
160	●	●					
180	●	●	●				
200	●	●	●	●			
220	●	●	●	●			
250		●	●	●	●		
280			●	●	●		
315			●	●	●	●	
355				●	●	●	●
400				●	●	●	●
450					●	●	●
500					●	●	●

Ordering Code (example):

Guide pillar with retaining ring groove, ~AFNOR		=2022.25.
Guide diameter d_1	50 mm	= 050.
Length l_1	220 mm	= 220
Order No		=2022.25.050.220

subject to alterations

Clamping flange with retaining ring, ~AFNOR

2073.46.

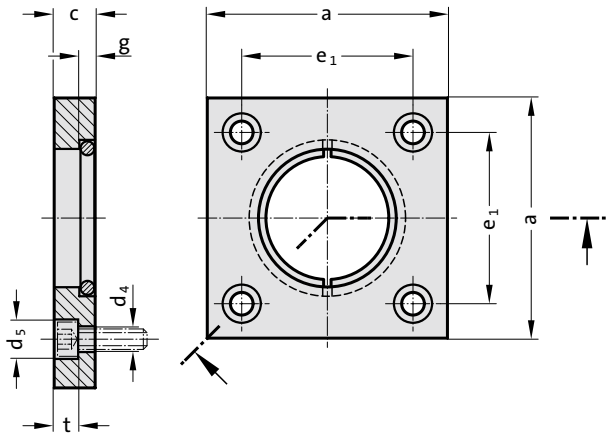



2073.46. Clamping flange with retaining ring, ~AFNOR

Order No	d_1	d_2	d_4	d_5	a	c	g	e_1	t
2073.46.025	25	22.3	6.6	11	45	10	2.7	31	7
2073.46.032	32	27.8	6.6	11	56	10	4.2	36	7
2073.46.040	40	35.8	6.6	11	70	12	4.2	50	7
2073.46.050	50	45.8	9	15	80	14	4.2	55	9
2073.46.063	63	56.8	11	18	100	18	6.2	70	11
2073.46.080	80	73.8	13.5	20	110	20	6.2	80	13
2073.46.100	100	93.8	13.5	20	140	20	6.2	100	13

Material:

Clamping flange: Steel
Retaining ring: Spring steel wire

Note:

For fixing the guide pillar 2022.25.

Order No. for reordering retaining ring: 2073.46.□□□.2

Guide pillar with snap ring groove, to Mercedes-Benz Standard

2022.16.



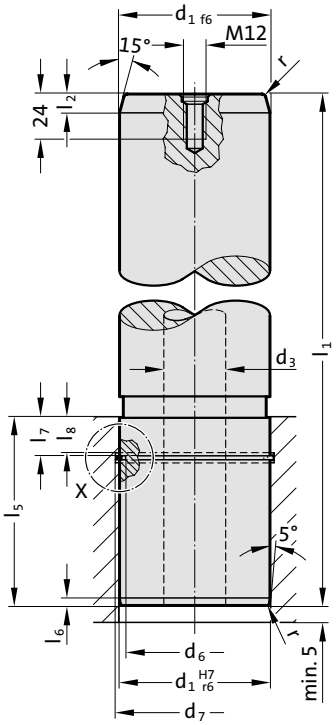

Material:

Steel, surface hardened
Surface hardness: 60 + 4 HRC, Hardness penetration 1,5 + 1 mm

Execution:

ground
up to Ø d_1 = 80 without central hole
by Ø d_1 = 80 with 1 lifting thread M12
from Ø d_1 = 100 with central hole (through) and with 2 lifting threads M12

Note:

Secure with snap ring 2061.48.
The guide pillar is only recommended for use with solid lubricants.
Matching guide combinations, see selection matrix at the beginning of chapter D.
Assembly guide lines / Dimensional requirements and tolerances at the end of chapter D.

Mounting example

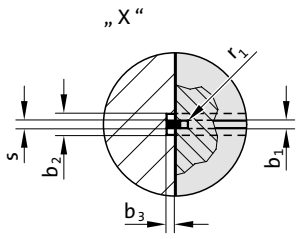

subject to alterations

Guide pillar with snap ring groove, to Mercedes-Benz Standard

2022.16. Guide pillar with snap ring groove, to Mercedes-Benz Standard

d_1	40	50	63	80	100	125	160
d_3	-	-	-	-	50	65	95
d_5	-	-	-	-	72	90	132
d_6	33	43	55.7	71.4	89.9	114.9	148.9
r	2	2.5	2.5	3	3	4	4
r_1	1	1	1	1.05	1.3	1.3	1.3
l_2	8	10	10	10	10	12	12
l_5	56	70	80	100	125	140	180
l_6	4	4	4	4	4	5	5
l_7	15	15	15	21	31	31	31
l_8	14	14	14	20	30	30	30
b_1	2	2	2	2.1	2.6	2.6	2.6
b_2	3.2	3.2	3.2	4.2	5.2	5.2	5.2
l_1							
140	●						
160	●	●					
180	●	●	●				
200	●	●	●				
224	●	●	●	●			
250	●	●	●	●	●		
280	●	●	●	●	●		
315		●	●	●	●	●	
355		●	●	●	●	●	
400			●	●	●	●	●
450				●	●	●	●
500				●	●	●	●
560							●



Ordering Code (example):

Guide pillar with snap ring groove, to Mercedes-Benz Standard		=2022.16.
Guide diameter d_1	80 mm	= 080.
Length l_1	224 mm	= 224
Order No		=2022.16.080.224

Guide pillar with pilot tapper and groove, to Mercedes-Benz Standard



Mounting example

2022.12.

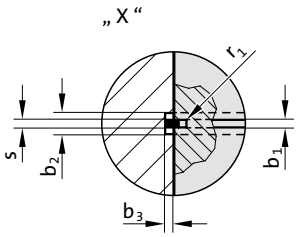

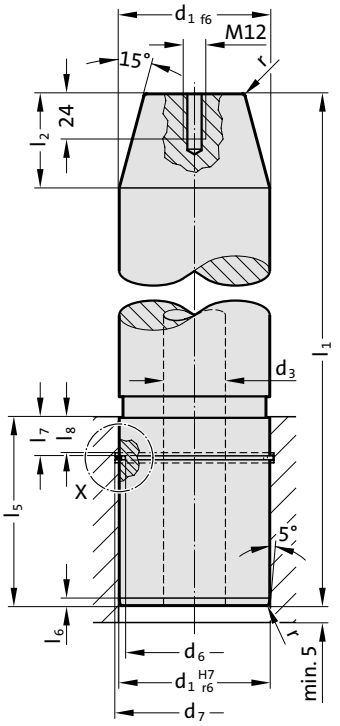

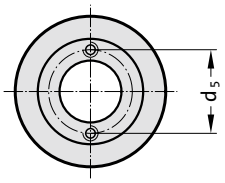

Material:

Steel, surface hardened
Surface hardness: 60 + 4 HRC, Hardness penetration 1,5 + 1 mm

Execution:

ground
Ø d_1 = 80 without central hole with 1 lifting thread M12
from Ø d_1 = 100 with central hole (through) and
with 2 lifting threads M8

Note:

Secure with snap ring 2061.48.
The guide pillar is only recommended for use with solid lubricants.
Matching guide combinations, see selection matrix at the beginning of chapter D.
Assembly guide lines / Dimensional requirements and tolerances at the end of chapter D.

2022.12. Guide pillar with pilot tapper and groove, to Mercedes-Benz Standard

d_1	80	100	125	160
d_3	-	50	65	95
d_5	-	62	82	119
d_6	71.4	89.9	114.9	148.9
r	3	3	4	4
r_1	1.05	1.3	1.3	1.3
l_2	50	50	50	50
l_5	100	125	140	180
l_6	4	4	5	5
l_7	21	31	31	31
l_8	20	30	30	30
b_1	2.1	2.6	2.6	2.6
b_2	4.2	5.2	5.2	5.2
l_1				
280	●			
315	●	●		
355	●	●	●	
400	●	●	●	
450	●	●	●	●
500			●	●
560				●

Ordering Code (example):

Guide pillar with pilot tapper and groove, to Mercedes-Benz Standard		=	2022.12.
Guide diameter d_1	125 mm	=	125.
Length l_1	355 mm	=	355
Order No		=	2022.12. 125. 355

subject to alterations

Snap ring

2061.48.

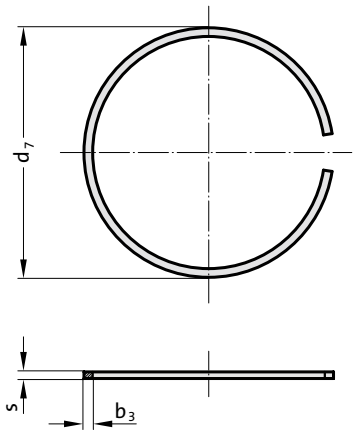

Mounting example

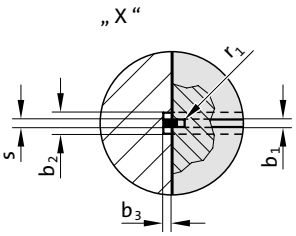



2061.48. Snap ring

Order No	Pillar-ø	b_1	b_3	d_7	s
2061.48.040	40	1.7	2.3	43	1.5
2061.48.050	50	1.7	2.3	53	1.5
2061.48.063	63	1.7	2.3	66	1.5
2061.48.080	80	2.1	2.8	83.2	2
2061.48.100	100	2.6	3.4	103.8	2.5
2061.48.125	125	2.6	3.4	128.8	2.5
2061.48.160	160	2.6	4	164.3	2.5

Material:

Spring strip steel

Note:

For securing guide pillars 2022.12. and 2022.16.

Guide pillar with groove, to CNOMO



Mounting example

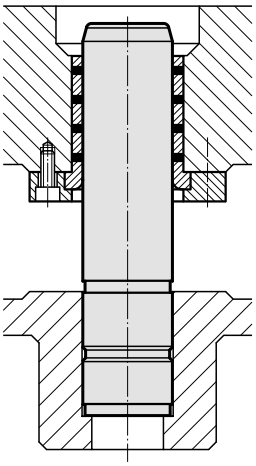

2022.16.45.

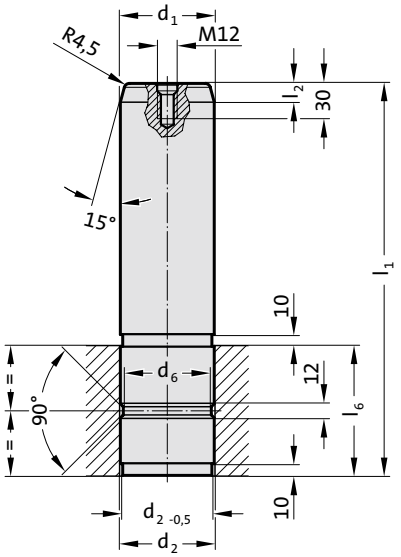

Material:

Steel, surface hardened
Surface hardness: 60 + 3 HRC, Hardness penetration 2 + 1,6 mm

Execution:

precision ground

Note:

Fit for receiving bore H7.
The guide pillar is only recommended for use with solid lubricants.
Matching guide combinations, see selection matrix at the beginning of chapter D.

2022.16.45. Guide pillar with groove, to CNOMO

d_1	80	100
Tolerance	-0,010/-0,025	-0,010/-0,025
d_2	80	100
Tolerance	+0,04/+0,05	+0,045/+0,055
d_6	75	95
l_2	16	16
l_6	110	140
l_1		
350	●	
400	●	●
450		●

Ordering Code (example):

Guide pillar with groove, to CNOMO		=	2022.16.45.
Guide diameter d_1	100 mm	=	100.
Length l_1	400 mm	=	400
Order No		=	2022.16.45. 100.400

subject to alterations

Guide pillar with groove

2022.16.48.

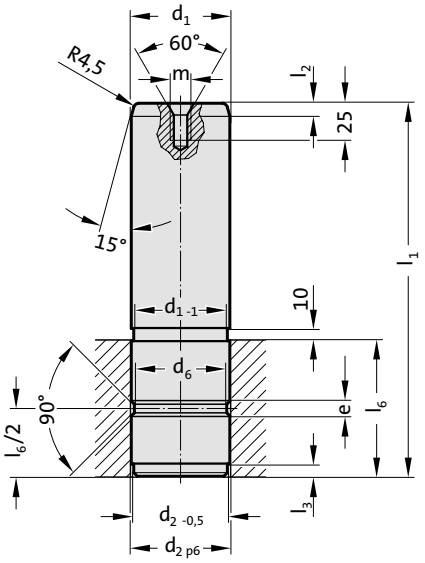

Mounting example

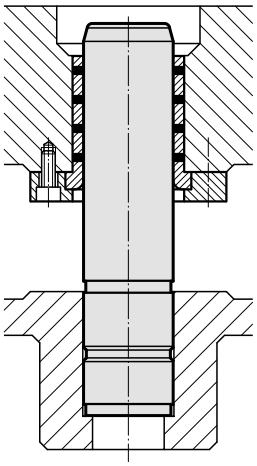



Material:

Steel, surface hardened
Surface hardness: 60 + 3 HRC, Hardness penetration 2 + 1,6 mm

Execution:

precision ground

Note:

Fit for receiving bore H7.
Guide pillar is recommended to be used only with guide elements withsolid lubricant.
Matching guide combinations, see selection matrix at the beginning of chapter D.

2022.16.48. Guide pillar with groove

d_1	25	30	40	50	60	65	80	100
Tolerance	-0,005/-0,015	-0,005/-0,015	-0,005/-0,015	-0,005/-0,015	-0,01/-0,02	-0,01/-0,025	-0,01/-0,025	-0,01/-0,025
d_2	25	30	40	50	60	65	80	100
Tolerance	+0,022/+0,035	+0,022/+0,035	+0,026/+0,042	+0,026/+0,042	+0,032/+0.051	+0,032/+0.051	+0,032/+0.051	+0,037/+0,059
d_6	21	26	36	45	55	60	75	95
l_2	5	5	5	10	10	10	10	10
l_3	5	5	5	10	10	10	10	10
l_6	30	40	50	70	90	100	120	150
m	M8	M8	M8	M12	M12	M12	M12	M12
l_1								
80	●							
100	●	●						
120	●	●	●					
140		●	●					
160		●	●	●				
180		●	●	●				
200			●	●	●			
220					●			
250				●	●	●	●	
300				●	●	●	●	●
350					●	●	●	●
400							●	●

Ordering Code (example):

Guide pillar with groove		=2022.16.48.	
Guide diameter d_1	60 mm	=	060.
Length l_1	200 mm	=	200
Order No		=2022.16.48.	060.200

Guide pillar with collar, to WDX



Mounting example

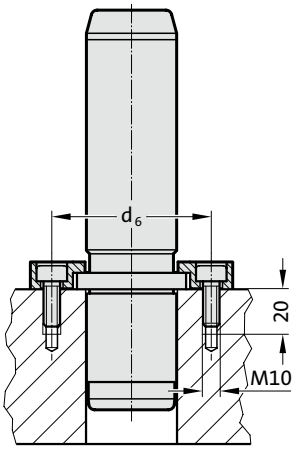

2022.29.

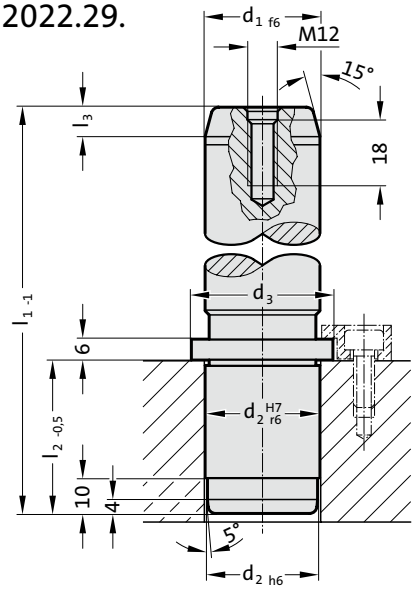

Material:

Steel, surface hardened
Surface hardness: 60 + 4 HRC, Hardness penetration 1,5 + 1 mm

Execution:

precision ground
Method of manufacturing entails that centre holes are not concentric with O.D.

Note:

Guide pillar is recommended to be used only with guide elements with solid lubricant.

Matching guide combinations, see selection matrix at the beginning of chapter D.
Assembly guide lines / Dimensional requirements and tolerances at the end of chapter D.
Order No. for guide pillar with collar, to WDX, with screw clamps 2022.29.□□□.□□□.A

Fixing:

(to be ordered separately)
Screw clamps with screws 2072.46 (M10 x 20 DIN EN ISO 4762)
up to Ø d_1 = 50 - 2 screw clamps
from Ø d_1 = 63 - 3 screw clamps

2022.29. Guide pillar with collar, to WDX

d_1	25	32	40	50	63	80	100
d_2	25	32	40	50	63	80	100
d_3	32	40	50	60	80	90	110
d_6	68	75	83	93	106	123	143
l_2	40	42	56	70	80	100	125
l_3	6	8	8	10	10	10	10
l_1							
125	●						
140	●	●					
160	●	●	●	●			
180	●	●	●	●			
200	●	●	●	●	●		
224	●	●	●	●	●	●	
250		●	●	●	●	●	
280			●	●	●	●	●
315				●	●	●	●
355					●	●	●
400					●	●	●
500						●	●

Ordering Code (example):

Guide pillar with collar, to WDX		=2022.29.	
Guide diameter d_1	50 mm	=	050.
Length l_1	160 mm	=	160
Order No		=2022.29.	050. 160

Guide pillar with collar, screw clamp retention, DIN 9825/~ISO 9182-5



2021.46.

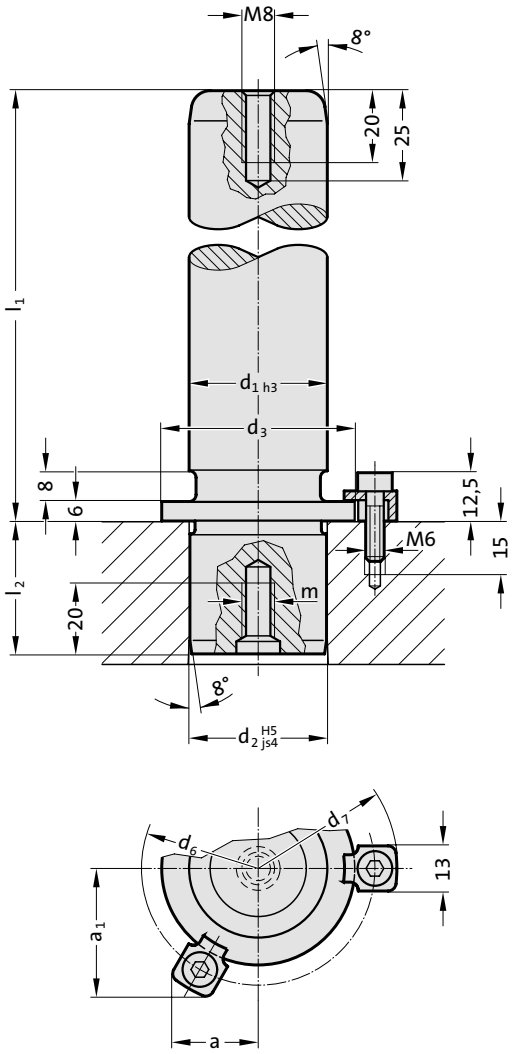

Description:

Demountable pillars with shoulder are suited to applications where die sharpening requires dismantling and re-fitting.

Material:

Steel, (Core strength: ≥ 900 N/mm²) surface hardened
Surface hardness: 60 + 3 HRC, Hardness penetration ≥ 1,8 mm

Execution:

fine precision ground
Method of manufacturing entails that centre holes are not concentric with O.D.

Note:

The attachment is with 3 Screw clamp, from Ø d_1 = 38 with 4 Screw clamp , which are included in delivery (Order No: 207.45 - Screw clamp incl. socket cap screw DIN 6912, Head Ø 13).
Bearing clearance / Preloading see pairing classification at the beginning of chapter D.
Matching guide combinations, see selection matrix at the beginning of chapter D.
Assembly guide lines / Dimensional requirements and tolerances at the end of chapter D.
Tolerance range:
yellow = .10
green = .20
red = .30

Mounting example

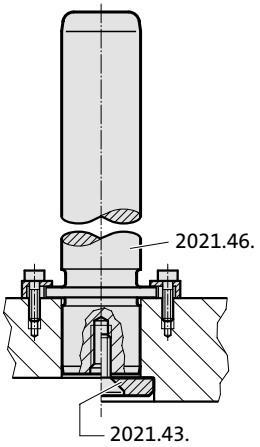

subject to alterations

Guide pillar with collar, screw clamp retention, DIN 9825/~ISO 9182-5

2021.46. Guide pillar with collar, screw clamp retention, DIN 9825/~ISO 9182-5

d_1	15 16	19 20	24 25	30 32	38 40	48 50	60 63	80
d_2	15 16	19 20	24 25	30 32	38 40	48 50	60 63	80
d_3	22	25	32	40	50	63	80	95
d_6	33	36	43	51	61	74	91	106
d_7	45.7	48.7	55.7	63.7	73.7	86.7	103.7	118.7
a	15.9	16.6	18.4	20.4	29.2	33.8	39.8	46.2
a_1	21.7	23	26	29.5	29.2	33.8	39.8	46.2
m	M8	M8	M8	M8	M8	M8	M8	M12
l_2	20	23	30	37	37	47	47	60
l_1								
100	●	●	●					
112	●	●	●	●				
125	●	●	●	●	●			
140	●	●	●	●	●	●		
160	●	●	●	●	●	●	●	
180	●	●	●	●	●	●	●	
200	●	●	●	●	●	●	●	●
224			●	●	●	●	●	●
250			●	●	●	●	●	●
280				●	●	●	●	●
315				●	●	●	●	●
355					●	●	●	●
400						●	●	●



Ordering Code (example):

Guide pillar with collar, screw clamp retention, DIN 9825/~ISO 9182-5		=2021.46.
Guide diameter d_1	32 mm	= 032.
Length l_1	315 mm	= 315.
Classification TOL	yellow	= 10
Order No		=2021.46.032.315.10

Guide pillar with collar and ball cage retainer



Description:
Demountable pillars with shoulder are suited to applications where die sharpening requires dismantling and re-fitting.

Material:
Steel, (Core strength: ≥ 900 N/mm²) surface hardened
Surface hardness: 60 + 3 HRC, Hardness penetration ≥ 1,8 mm

Execution:
fine precision ground

Note:
The attachment is with 3 Screw clamp, from ∅ d_1 = 38 with 4 Screw clamp , which are included in delivery (Order No: 207.45 - Screw clamp incl. socket cap screw DIN 6912, Head ∅ 13).
Bearing clearance / Preloading see pairing classification at the beginning of chapter D.
Matching guide combinations, see selection matrix at the beginning of chapter D.
Assembly guide lines / Dimensional requirements and tolerances at the end of chapter D.
Tolerance range:
yellow = .10
green = .20
red = .30

2021.44.

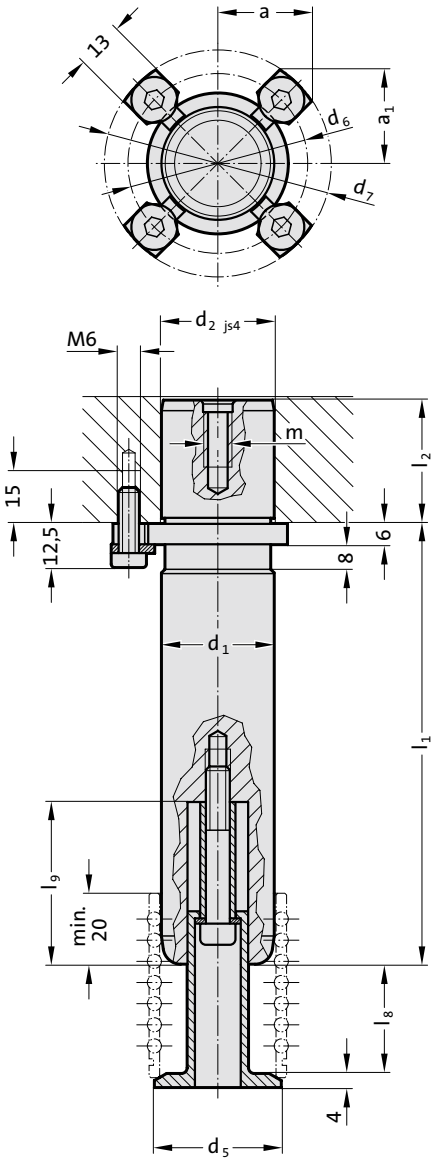

Mounting example

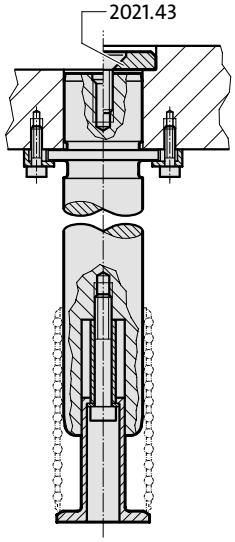

subject to alterations

Guide pillar with collar and ball cage retainer

2021.44. Guide pillar with collar and ball cage retainer

d_1	38	40	48	50	60	63
d_2	38	40	48	50	60	63
d_3	50	50	63	63	80	80
d_5	42	44	52	54	64	67
d_6	61	61	74	74	91	91
d_7	73.7	73.7	86.7	86.7	103.7	103.7
a	29.2	29.2	33.8	33.8	39.8	39.8
a_1	29.2	29.2	33.8	33.8	39.8	39.8
m	M8	M8	M8	M8	M8	M8
l_2	37	37	47	47	47	47
KG (l_8 / l_9)						
1 (31 / 46)	●	●	●	●	●	●
2 (41 / 56)	●	●	●	●	●	●
3 (51 / 66)	●	●	●	●	●	●
4 (61 / 76)	●	●	●	●	●	●
5 (73 / 89)	●	●	●	●	●	●
l_1						
125	●	●				
140	●	●	●	●		
160	●	●	●	●	●	●
180	●	●	●	●	●	●
200	●	●	●	●	●	●
224	●	●	●	●	●	●
250	●	●	●	●	●	●
280	●	●	●	●	●	●
315	●	●	●	●	●	●
355	●	●	●	●	●	●
400			●	●	●	●

Ordering Code (example):

Guide pillar with collar and ball cage retainer		=2021.44.	
Guide diameter d_1	48 mm	=	048.
Length l_1	400 mm	=	400.
Cage retainer size KG	1	=	1.
Classification TOL	yellow	=	10
Order No		=2021.44.048.400.1.10	

Retaining disc with screw



2021.43.

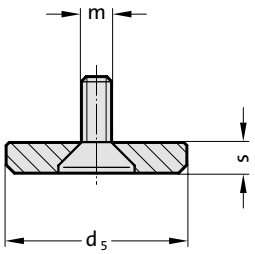

Material:

Retaining disc: Steel
Countersunk head cap screw DIN 7991/ISO 10642

Note:

For fixing the guide pillars 2021.44., 2021.46. and 2021.29.

2021.43. Retaining disc with screw

Order No	Nominal-ø	Pillar-ø	d_5	s	m
2021.43.016	16	15/16	22	6	8
2021.43.020	20	19/20	25	6	8
2021.43.025	25	24/25	32	6	8
2021.43.032	32	30/32	40	6	8
2021.43.040	40	38/40	50	6	8
2021.43.050	50	48/50	60	6	8
2021.43.063	63	60/63	70	6	8
2021.43.080	80	80	93	12	12

subject to alterations

Ball guide unit to Mercedes-Benz Standard

2025.94.

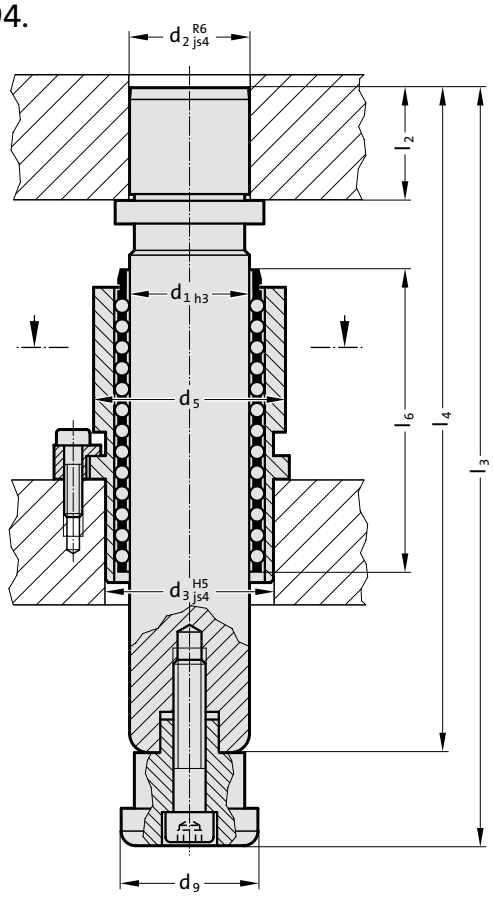

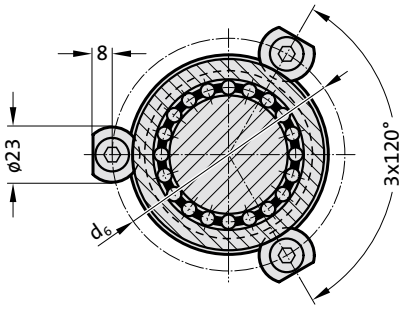



Material:

Demountable guide pillar: Steel, surface hardened
Guide bush: Tooling steel
Cage retainer: Steel
Ball cage: Brass

Execution:

Ball guide unit 2025.94. consisting of: Demountable guide pillar, guide bush, ball cage, cage retainer, clamps and socket cap screws to DIN EN ISO 4762.

2025.94. Ball guide unit to Mercedes-Benz Standard

Pillar diameter d_1	50	80
d_2	50	80
d_3	70	105
d_5	80	118
d_6	97	135
d_9	57	91
l_2	47	75
l_3	316	450
l_4	271	400
l_6	128	160

Ordering Code (example):

Ball guide unit to Mercedes-Benz Standard	=2025.94.	
Pillar diameter d_1	80 mm=	080
Order No	=2025.94.080	

FIBRO

Guide pillar with collar "ECO-LINE"

2021.29.



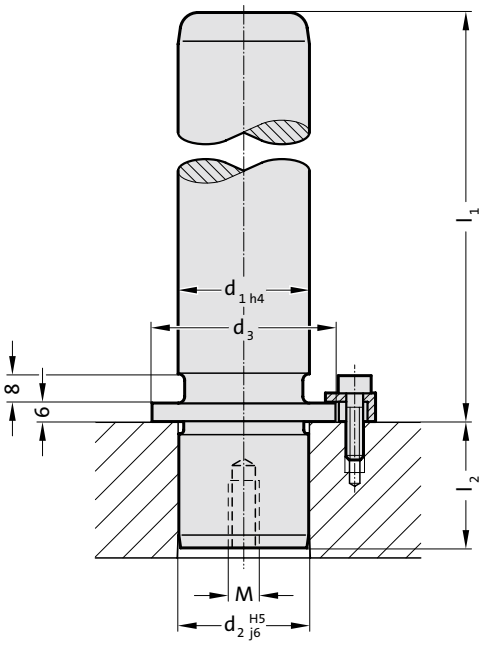

Material:

Steel, surface hardened
Surface hardness: 60 + 4 HRC, Hardness penetration 1,5 + 1 mm

Execution:

ground
Method of manufacturing entails that centre holes are not concentric with O.D.

Note:

Guide pillars only recommended for use with sliding guides!
The attachment is with 3 Screw clamp, from Ø d_1 = 38 with 4 Screw clamp , which are included in delivery (Order No: 207.45 - Screw clamp incl. socket cap screw DIN 6912, Head Ø 13).
Matching guide combinations, see selection matrix at the beginning of chapter D.
Assembly guide lines / Dimensional requirements and tolerances at the end of chapter D.

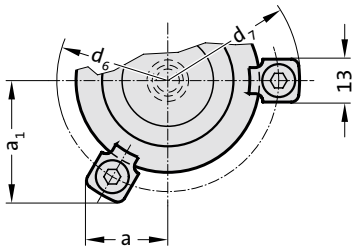

2021.29. Guide pillar with collar "ECO-LINE"

d_1	15 16	19 20	24 25	30 32	38 40	48 50	60 63	80
d_2	15 16	19 20	24 25	30 32	38 40	48 50	60 63	80
d_3	22	25	32	40	50	63	80	95
d_6	33	36	43	51	61	74	91	106
d_7	45.7	48.7	55.7	63.7	73.7	86.7	103.7	118.7
a	15.9	16.6	18.4	20.4	29.2	33.8	39.8	46.2
a_1	21.7	23	26	29.5	29.2	33.8	39.8	46.2
M	M8	M8	M8	M8	M8	M8	M8	M12
l_2	20	23	30	37	37	47	47	60
l_1								
100	●	●	●					
112	●	●	●	●				
125	●	●	●	●	●			
140	●	●	●	●	●	●		
160	●	●	●	●	●	●	●	
180	●	●	●	●	●	●	●	
200	●	●	●	●	●	●	●	●
224			●	●	●	●	●	●
250			●	●	●	●	●	●
280				●	●	●	●	●
315				●	●	●	●	●
355					●	●	●	●
400						●	●	●

Ordering Code (example):

Guide pillar with collar "ECO-LINE"		=	2021.29.
Guide diameter d_1	32 mm	=	032.
Length l_1	112	=	112
Order No		=	2021.29.032.112

subject to alterations

Guide pillar with collar

202.61.

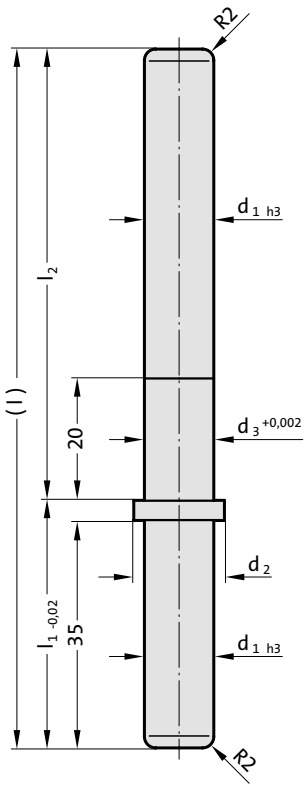



Description:
On small modular die sets the combination plastic ball cage 206.41./ collared guide pillar 202.61. has indeed been successful for several years.

Material:
Steel, surface hardened
Surface hardness: 60 + 4 HRC, Hardness penetration 1 ± 0,2 mm

Execution:
precision ground

Note:
For use with ball cage 206.41. and guide bushes 2062.44.012. or 2061.44.15.

202.61. Guide pillar with collar

Order No	d_1	d_2	d_3	l	l_1	l_2
202.61.012.041.074	12	15.9	12.02	115	41	74
202.61.015.044.080	15	23.5	15.02	124	44	80

Guide bush for ball bearing, for highest stroking speed
Guide bush for ball bearing, ISO 9448-3



2062.44.012.

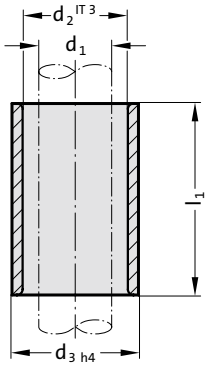

Material:
Tool steel, hardened 62 ± 2 HRC

Execution:
Bearing surfaces honed,
outside diameter precision ground.

Note:
For use with ball cage 206.41. and guide pillar 202.61.

2062.44.012. Guide bush for ball bearing, for highest stroking speed

Order No	d_1	d_2	d_3	l_1	for ball Ø
2062.44.012.016.032	12	16	20	32	2
2062.44.012.017.032	12	17	20	32	2.5



2061.44.015.

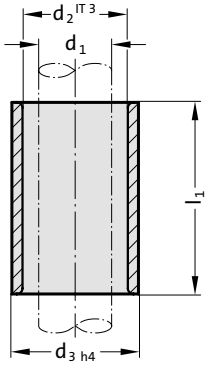

Material:
Tool steel, hardened 62 ± 2 HRC

Execution:
Bearing surfaces honed,
outside diameter precision ground.

Note:
For use with ball cage 206.41. and guide pillar 202.61.
Tolerance range:
yellow = .10
green = .20

2061.44. Guide bush for ball bearing, ISO 9448-3

Order No	d_1	d_2	d_3	l_1
2061.44.015.023.10	15	21	28	23
2061.44.015.023.20	15	21	28	23
2061.44.015.023.30	15	21	28	23
2061.44.015.030.10	15	21	28	30
2061.44.015.030.20	15	21	28	30
2061.44.015.030.30	15	21	28	30
2061.44.015.037.10	15	21	28	37
2061.44.015.037.20	15	21	28	37
2061.44.015.037.30	15	21	28	37
2061.44.015.047.10	15	21	28	47
2061.44.015.047.20	15	21	28	47
2061.44.015.047.30	15	21	28	47
2061.44.015.060.10	15	21	28	60
2061.44.015.060.20	15	21	28	60
2061.44.015.060.30	15	21	28	60

subject to alterations

Ball cage, plastic, for highest stroking speed

206.41.

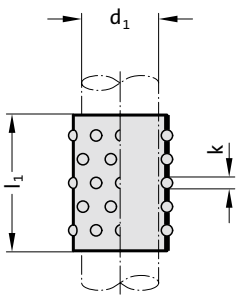



206.41. Ball cage, plastic, for highest stroking speed

Order No	d_1	l_1	k
206.41.012.020.021	12	21	2
206.41.012.020.042	12	42	2
206.41.012.025.021	12	21	2.5
206.41.012.025.042	12	42	2.5
206.41.015.030.045	15	45	3
206.41.015.030.056	15	56	3
206.41.015.030.063	15	63	3
206.41.015.030.071	15	71	3

Description:

Owing to its much lower inertia, the plastic ball cage of particular advantage in die sets operating at stroking speed of 1000 SPM and more.
The phenomenon of ball-drag at the reversal point of cage travel, set up by thecage inertia, no longer occurs. The negative influence of this drag is eliminated – and so are the wear symptoms associated with it.
On small modular die sets the combination plastic ball cage 206.41./ collared guide pillar 202.61. has indeed been successful for several years.

Material:

Cage: Polyacetal tubing
Balls: Steel hardened DIN 5401- Quality Class 1

Demountable guide pillar with centre fixing



Mounting example

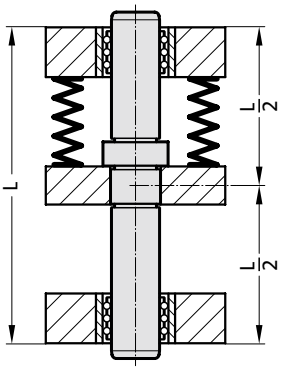

2020.63.

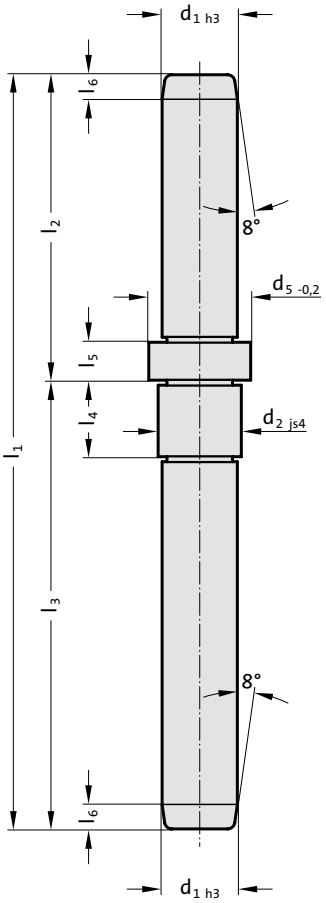

Material:
Steel, surface hardened
Surface hardness: 62 + 2 HRC, Hardness penetration 1 ± 0,2 mm

Execution:
precision ground

Note:
For press fit into register bore N5.
Bending equation see at the beginning of chapter D.
Matching guide combinations, see selection matrix at the beginning of chapter D.

2020.63. Demountable guide pillar with centre fixing

Order No	d_1	d_2	d_5	l_1	l_2	l_3	l_4	l_5	l_6
2020.63.012.042.074	12	13	15.9	116	42	74	12.5	5	3
2020.63.016.064.094	16	18	21.9	158	64	94	16	8	5

subject to alterations

Demountable guide pillar with centre fixing



2020.62.

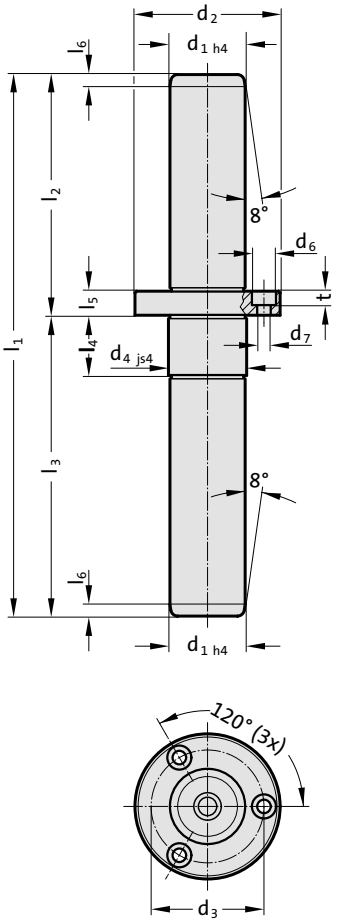

Material:

Steel, (Core strength: ≥ 900 N/mm²) surface hardened
Surface hardness: 60 + 3 HRC, Hardness penetration ≥ 2,0 + 1,6 mm

Execution:

precision ground

Note:

Use socket cap screws DIN EN ISO 4762 12.9.
Bearing clearance / Preloading see pairing classification at the beginning of chapter D.
Matching guide combinations, see selection matrix at the beginning of chapter D.
Bending equation see at the beginning of chapter D.
Ø 12 only available in tolerance range yellow = .10
Tolerance range:
yellow = .10
green = .20
red = .30

Mounting example

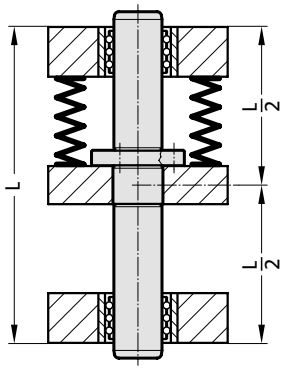

subject to alterations

Demountable guide pillar with centre fixing

2020.62. Demountable guide pillar with centre fixing

d_1	d_2	d_3	d_4	d_6	d_7	t	l_1	l_2	l_3	l_4	l_5	l_6
12	28	20	13	6	3.4	3.4	90	40	50	12	6	3
12	28	20	13	6	3.4	3.4	100	40	60	12	6	3
12	28	20	13	6	3.4	3.4	110	50	60	12	6	3
12	28	20	13	6	3.4	3.4	120	50	70	12	6	3
12	28	20	13	6	3.4	3.4	130	60	70	12	6	3
12	28	20	13	6	3.4	3.4	140	70	70	12	6	3
16	38	28	18	8	4.5	4.6	140	60	80	16	8	4
16	38	28	18	8	4.5	4.6	150	60	90	16	8	4
16	38	28	18	8	4.5	4.6	160	70	90	16	8	4
16	38	28	18	8	4.5	4.6	170	70	100	16	8	4
16	38	28	18	8	4.5	4.6	180	80	100	16	8	4
16	38	28	18	8	4.5	4.6	190	90	100	16	8	4
19	42	32	22	8	4.5	4.6	160	70	90	20	8	4
19	42	32	22	8	4.5	4.6	170	70	100	20	8	4
19	42	32	22	8	4.5	4.6	180	80	100	20	8	4
19	42	32	22	8	4.5	4.6	190	80	110	20	8	4
19	42	32	22	8	4.5	4.6	200	90	110	20	8	4
19	42	32	22	8	4.5	4.6	210	100	110	20	8	4
25	48	38	26	8	4.5	4.6	180	80	100	22	8	6
25	48	38	26	8	4.5	4.6	190	80	110	22	8	6
25	48	38	26	8	4.5	4.6	200	90	110	22	8	6
25	48	38	26	8	4.5	4.6	210	90	120	22	8	6
25	48	38	26	8	4.5	4.6	220	100	120	22	8	6
25	48	38	26	8	4.5	4.6	230	110	120	22	8	6
32	60	48	34	10	5.5	5.7	180	80	100	25	10	7
32	60	48	34	10	5.5	5.7	190	80	110	25	10	7
32	60	48	34	10	5.5	5.7	200	90	110	25	10	7
32	60	48	34	10	5.5	5.7	210	90	120	25	10	7
32	60	48	34	10	5.5	5.7	220	100	120	25	10	7
32	60	48	34	10	5.5	5.7	230	100	130	25	10	7
32	60	48	34	10	5.5	5.7	240	110	130	25	10	7
32	60	48	34	10	5.5	5.7	250	110	140	25	10	7
40	70	56	42	11	6.6	6.8	200	90	110	27	12	7
40	70	56	42	11	6.6	6.8	210	90	120	27	12	7
40	70	56	42	11	6.6	6.8	220	100	120	27	12	7
40	70	56	42	11	6.6	6.8	230	100	130	27	12	7
40	70	56	42	11	6.6	6.8	240	110	130	27	12	7
40	70	56	42	11	6.6	6.8	250	110	140	27	12	7
40	70	56	42	11	6.6	6.8	260	120	140	27	12	7

Ordering Code (example):

Demountable guide pillar with centre fixing		=	2020.62.
Guide diameter d_1	25 mm	=	025.
Length with collar (short) l_2	80 mm	=	080.
Length up to collar (long) l_3	110 mm	=	110.
Classification TOL	yellow	=	10
Order No		=	2020.62.025.080.110.10

Demountable guide pillar with centre fixing and ring nut



Mounting example

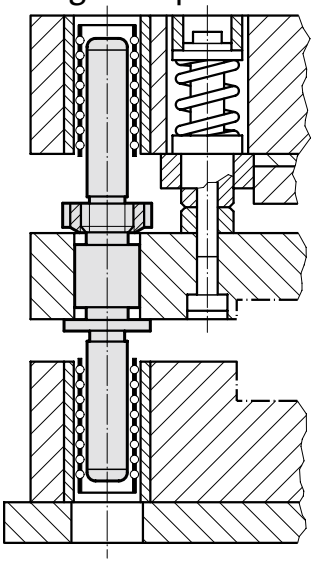

202.60.

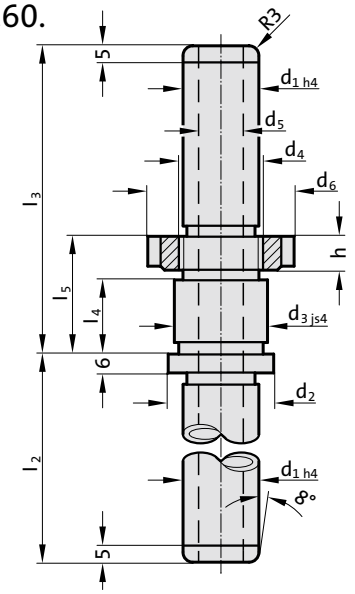

Material:

Steel, (Core strength: ≥ 900 N/mm²) surface hardened
Surface hardness: 60 + 3 HRC, Hardness penetration ≥ 1,8 mm

Execution:

precision ground

Note:

Bearing clearance / Preloading see pairing classification at the beginning of chapter D.
Matching guide combinations, see selection matrix at the beginning of chapter D.
Bending equation see at the beginning of chapter D.
Assembly guide lines / Dimensional requirements and tolerances at the end of chapter D.
Tolerance range:
yellow = .10
green = .20
red = .30

202.60 Demountable guide pillar with centre fixing and ring nut

d_1	19	25	32	40
d_2	32	38	46	56
d_3	25	30	36	46
d_4	M22 x 1.5	M28 x 1.5	M35 x 1.5	M45 x 1.5
d_5	8	12	20	28
d_6	40	50	55	68
h	9	10	11	12
l_2	80	80	100	100
l_3	120	120	140	140
l_4	29	29	34	34
l_5	45	45	50	50

Ordering Code (example):

Demountable guide pillar with centre fixing and ring nut		=202.60.	
Guide diameter d_1	32 mm	=	032.
Length with collar l_2	100 mm	=	100.
Length up to collar l_3	140 mm	=	140.
Classification TOL	yellow	=	10
Order No		=202.60.032.100.140.10	

subject to alterations

Demountable guide pillar with conical centre fixing

2020.64.

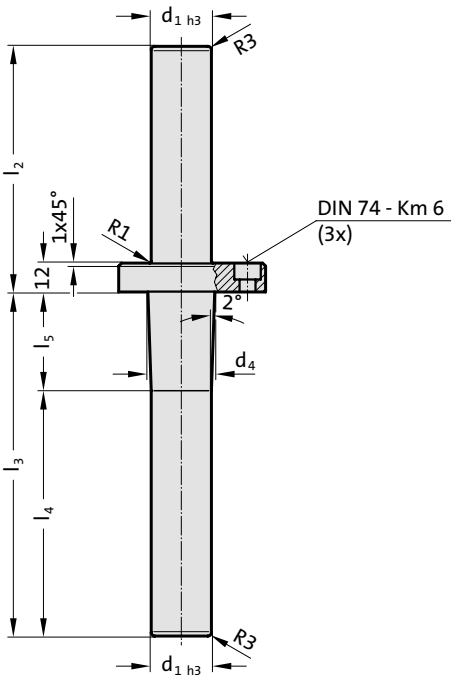

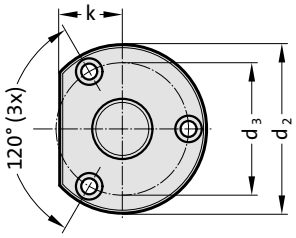

Mounting example

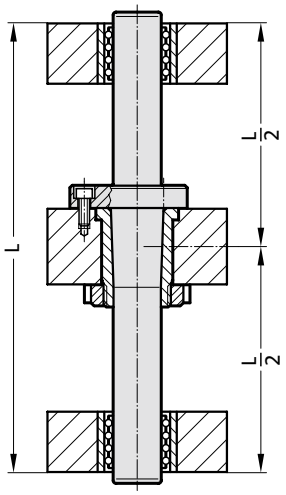



Material:
Steel, hardened 62 ± 2 HRC

Execution:
precision ground

Note:
Matching retaining bush 2021.64.
Use socket cap screws DIN EN ISO 4762 12.9.
Bearing clearance / Preloading see pairing classification at the beginning of chapter D.
Matching guide combinations, see selection matrix at the beginning of chapter D.
Bending equation see at the beginning of chapter D.

Tolerance range:
yellow = .10
green = .20

2020.64. Demountable guide pillar with conical centre fixing

d_1	25	25	32	32	32	32	32	32
d_2	70	70	76	76	76	76	76	76
d_3	55	55	62	62	62	62	62	62
d_4	27.86	27.86	34.86	34.86	34.86	34.86	34.86	34.86
k	26	26	30	30	30	30	30	30
l_2	102	122	102	122	122	137	142	162
l_3	143	143	143	143	153	153	153	153
l_4	102	102	102	102	112	112	112	112
l_5	41	41	41	41	41	41	41	41

Ordering Code (example):

Demountable guide pillar with conical centre fixing		=	2020.64.
Guide diameter d_1	32 mm	=	032.
Length with collar (short) l_2	122 mm	=	122.
Length up to collar (long) l_3	153 mm	=	153.
Classification TOL	yellow	=	10
Order No		=	2020.64.032.122.153.10

Retaining bush for guide pillar conical 2020.64.



Mounting example

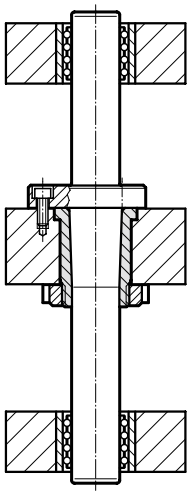

2021.64.

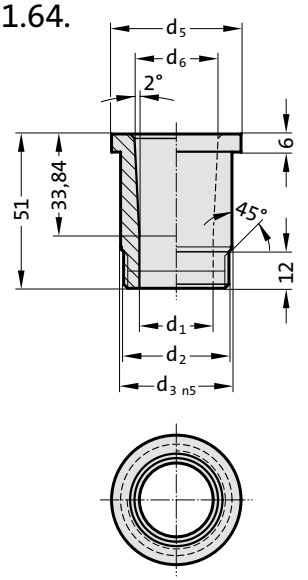

Material:

16 MnCr5
Surface hardness: 60 ± 2 HRC, Hardness penetration 0,8–1 mm

Execution:

Thread not hardenend

Fixing:

Ring nut 2073.48.□□15 order separately.

2021.64. Retaining bush for guide pillar conical 2020.64.

Order No	D1xx	d_2	d_3	d_5	d_6
2021.64.025	25.5	M35x1,5	37	43	27.86
2021.64.032	32.5	M40x1,5	44	50	34.86

subject to alterations

Ring nut DIN 1804

2073.48.

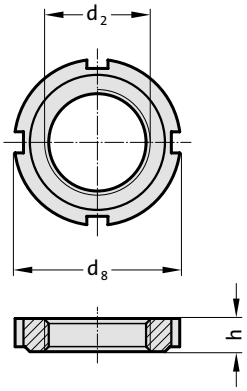



2073.48. Ring nut DIN 1804

Order No	d_2	d_8	h
2073.48.35.15	M35x1,5	48	11
2073.48.40.15	M40x1,5	54	12

Material:
Steel, hardened

Note:
For fixing the retaining bush 2021.64.

FIBRO

Guide unit with collar MILLION GUIDE



2024.94.

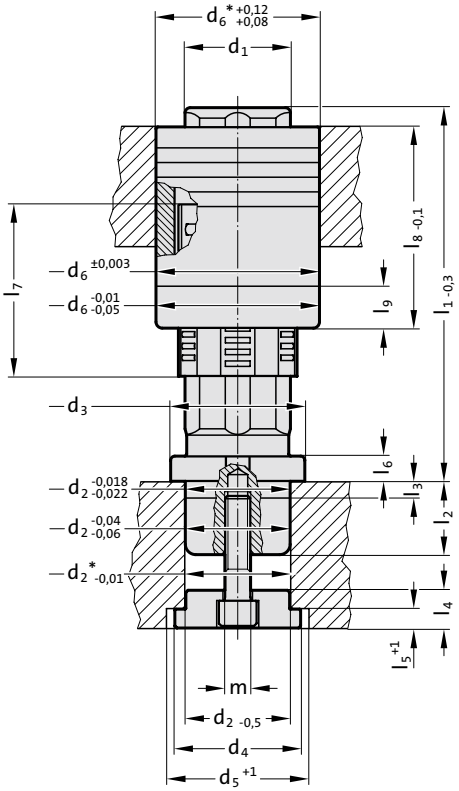

Description:

FIBRO Million Guide guide units are used wherever rigidity, robustness and a precision guide function is required.
The large supporting surface of the needle rollers ensures these properties.
For stroke speeds up to 50 m/min and temperatures up to 80°C.

Material:

Needle roller cage: Plastic
Needle rollers: Steel, hardened
Guide bush: Tool steel alloy, hardened, 60 ± 2 HRC
Guide pillar: Tool steel alloy, hardened, 60 ± 2 HRC
Disk: Steel

Execution:

Guide unit consisting of paired guide pillar and guide bush, needle roller cage and disk for fixing the guide column. The fixing screw is ordered separately as the screw required depends on the thickness of the base plate.

Guide pillar and bushes are executed at:
Ø 16 with 4 running surfaces
Ø 12, Ø 20 - Ø 60 with 6 running surfaces
Ø 80 with 8 running surfaces

Note:

Guide unit must be installed in accordance with the instructions!
Guide bush must be bonded!

* Mounting bore

Cross section of guide unit

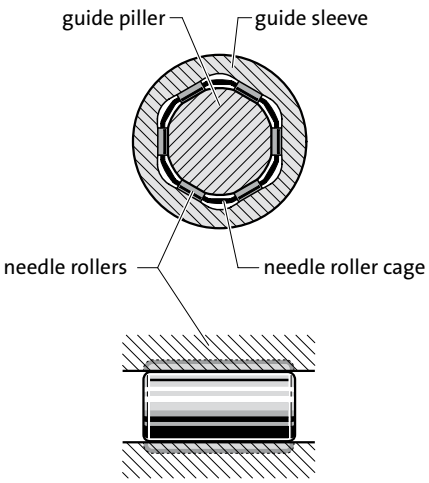

subject to alterations

Guide unit with collar MILLION GUIDE

2024.94. Guide unit with collar MILLION GUIDE

d_1	12	16	20	25	30	32	40	50	60	80
d_2	12	16	20	25	30	32	40	50	60	80
d_3	18	24	29	35	40	42	54	64	74	98
d_4	16	22	26	32	38	40	50	60	72	105
d_5	18	24	28	34	38	40	50	60	72	105
d_6	23	30	37	44	50	54	68	78	95	120
m	M5x8	M6x10	M8x20	M8x20	M10x25	M10x25	M12x30	M12x30	M14x30	M16x30
l_2	12	16	20	25	30	30	35	35	42	45
l_3	6	6	8	8	8	8	8	8	15	15
l_4	7	10	13	13	16	16	18	18	20	26
l_5	3	4	5	5	7	7	9	9	12	13
l_6	5	6	8	8	9	9	10	12	15	15
l_7	29.8	30	52	62	68	68	78	82	116	132
l_8	40	40	60	70	78	78	92	96	120	145
l_9	0	0	20	20	20	20	20	20	20	25
l_1										
50	●									
60	●									
70	●									
80	●	●	●							
90	●	●	●							
100	●	●	●	●	●	●				
110	●	●	●	●	●	●				
120	●	●	●	●	●	●	●			
130		●	●	●	●	●	●			
140				●	●	●	●			
150				●	●	●	●	●	●	
160				●	●	●	●	●	●	
170					●	●	●	●	●	
180					●	●	●	●	●	●
190					●	●	●	●	●	●
200					●	●	●	●	●	●
210							●	●	●	●
220							●	●	●	●
230								●	●	●
240								●	●	●
250								●	●	●
260										●
270										●
280										●

Ordering Code (example):

Guide unit with collar MILLION GUIDE		=2024.94.
Guide diameter d_1	32 mm	= 032.
Guide length l_1	100 mm	= 100
Order No		=2024.94.032. 100

Guide unit with center fixing MILLION GUIDE



2024.96.

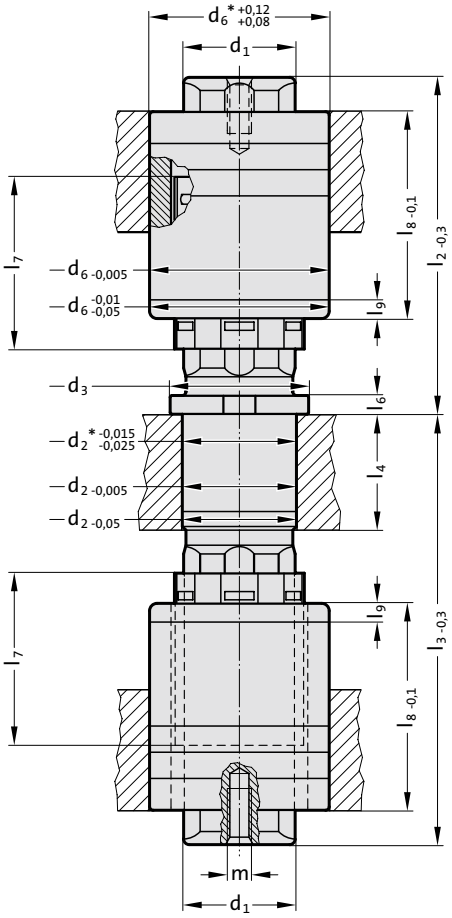

Description:

FIBRO Million Guide guide units are used wherever rigidity, robustness and a precision guide function is required.
The large supporting surface of the needle rollers ensures these properties.
For stroke speeds up to 50 m/min and temperatures up to 80°C.

Material:

Needle roller cages: Plastic
Needle rollers: Steel, hardened
Guide bushes: Tool steel alloy, hardened, 60 ± 2 HRC
Guide pillar: Tool steel alloy, hardened, 60 ± 2 HRC
Disk: Steel

Execution:

Guide unit consisting of a paired guide pillar, guide bushes and needleroller cages.

Guide pillar and bushes are executed at:
Ø 16 with 4 running surfaces
Ø 12, Ø 20 - Ø 30 with 6 running surfaces

Note:

Guide unit must be installed in accordance with the instructions!
Guide bushes must be bonded!

* Mounting bore

Cross section of guide unit

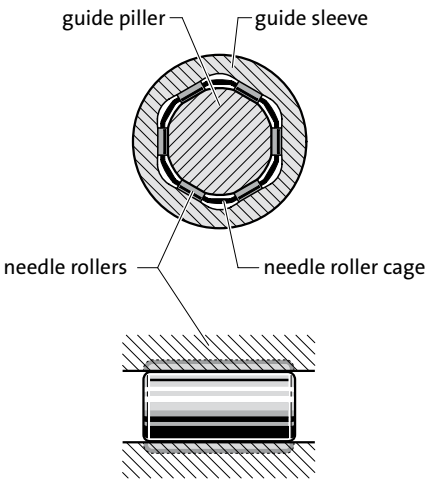

subject to alterations

Guide unit with center fixing MILLION GUIDE

2024.96. Guide unit with center fixing MILLION GUIDE

d_1	12	16	20	25	30
d_2	12.5	16.5	20.5	25.5	30.5
d_3	19	23	27	32	37
d_6	22	28	34	40	48
m	M5x8	M6x10	M8x20	M8x20	M8x20
l_4	12	16	20	25	30
l_6	4	5	5	5	5
l_7	29.8	30	46	56	68
l_8	30	40	50	60	70
l_9	-	-	20	20	20
l_3	l_2				
50	40 50 60				
60	40 50 60				
70	40 50 60	40 50 60			
80		40 50 60 70	40 50 60 70		
90		40 50 60 70	40 50 60 70	40 50 60 70	40 50 60 70
100			40 50 60 70	40 50 60 70	40 50 60 70
110				40 50 60 70	40 50 60 70

Ordering Code (example):

Guide unit with center fixing MILLION GUIDE		=2024.96.
Guide diameter d_1	20 mm=	020.
Length up to collar l_3	80 mm=	080.
Length with collar l_2	40 mm=	040
Order No		=2024.96.020.080.040

FIBRO

Guide bearing with solid lubricant

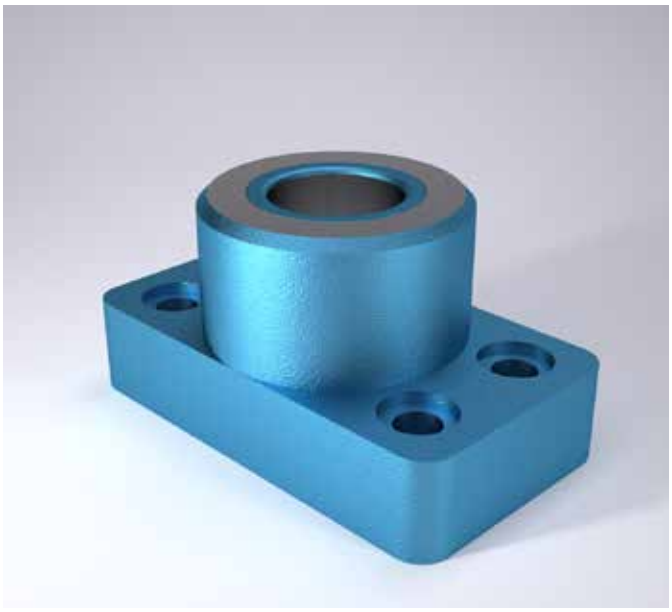

2031.70.

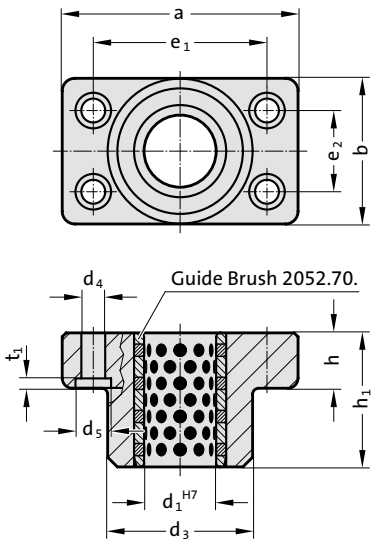

Mounting example

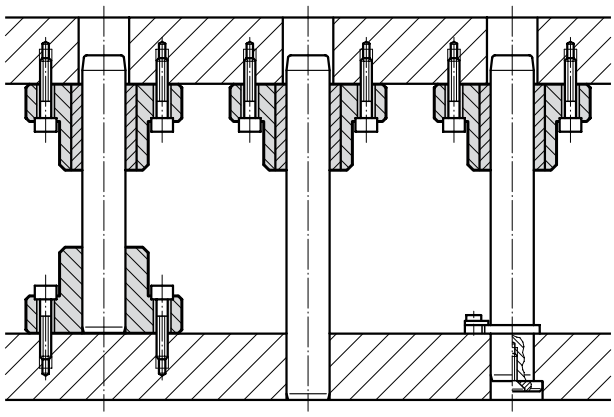

Material:

Basic body: Special cast iron
Guide bush 2052.70.: Bronze with solid lubricant, oilless lubricating

Execution:

Face and top machined.

Note:

Notes on sliding type guides at the beginning of chapter D.
Matching guide combinations, see selection matrix at the beginning of chapter D.

2031.70. Guide bearing with solid lubricant

d_1	19 20	24 25	30 32	38 40	50	63	80
d_3	45	50	65	80	96	110	130
d_4	9	9	11	13.5	17.5	17.5	22
a	85	90	115	130	160	180	215
b	45	50	65	80	96	110	130
e_1	64	68	83	95	118	132	160
e_2	24	28	34	45	55	62	75
h	18	22	25	30	35	35	40
h_1	37	47	60	77	95	120	120
t_1	3	3	3	3	4	4	10

Ordering Code (example):

Guide bearing with solid lubricant		=2031.70.
Guide diameter d_1	32 mm	= 032
Order No		=2031.70.032

subject to alterations

Retention bearing

2031.01.

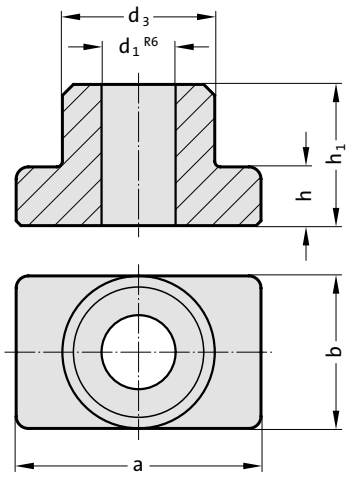

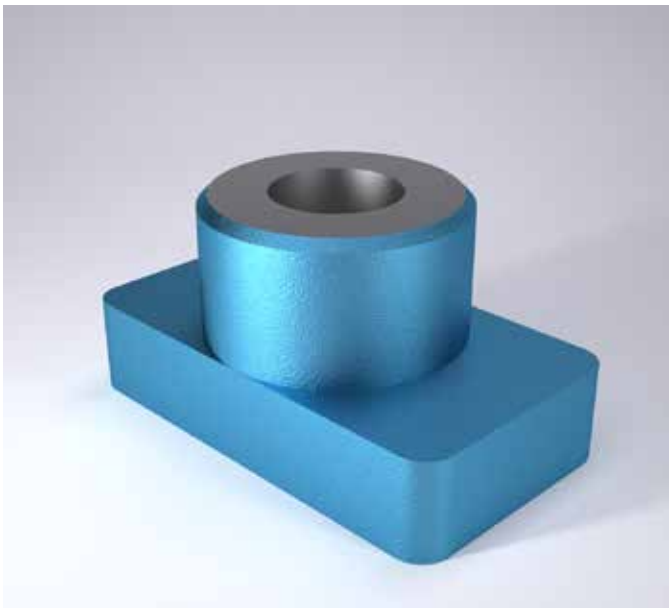

Material:
Special cast iron

Execution:
Face and top machined. Hole fine bored to d_1^{R6} fit.

Note:
Check squareness of pillars after press-fitting.

Mounting example

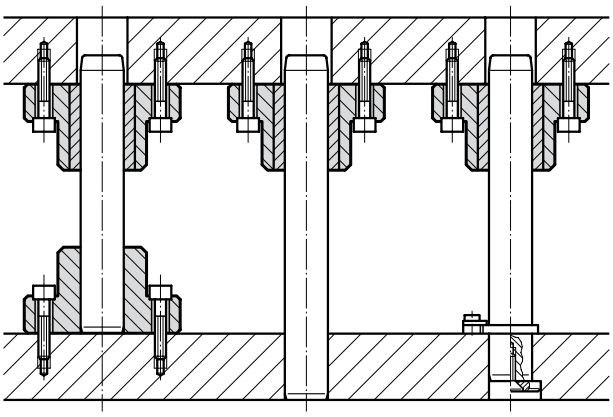

2031.01. Retention bearing

d_1	15 16	19 20	24 25	30 32	38 40	48 50	60 63	80
d_3	35	45	50	65	80	96	110	130
a	70	85	90	115	130	160	180	215
b	35	45	50	65	80	96	110	130
h	18	18	22	25	30	35	35	40
h_1	30	37	47	60	77	95	120	120

Ordering Code (example):

Retention bearing		=2031.01.
Guide diameter d_1	32 mm =	032
Order No		=2031.01.032

FIBRO

Guide bearing, sintered guide

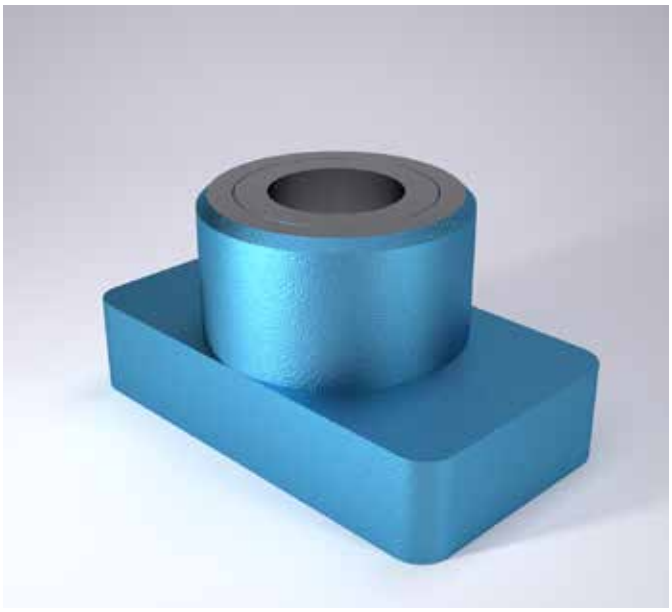

2031.31.

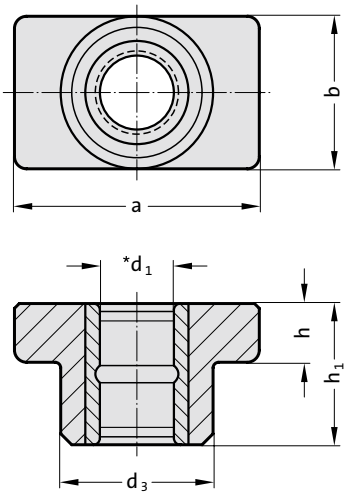

Mounting example

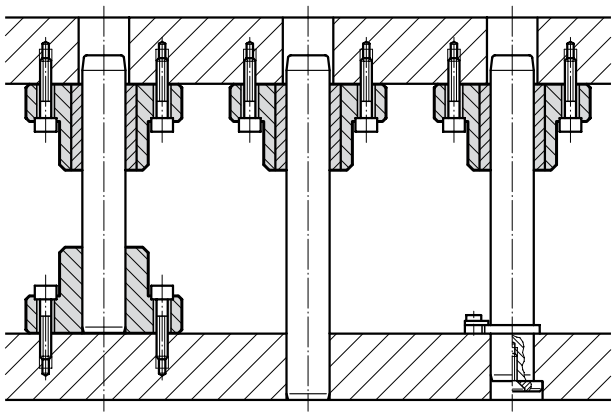

Material:

Basic body: Special cast iron
Guide bush 2051.32.: Sintered ferrite of high purity, carbonitrided, long-term lubrication

Execution:

Face and top machined. Bores honed.

Note:

Notes on sliding type guides at the beginning of chapter D.
Bearing clearance see pairing classification at the beginning of chapter D.
Matching guide combinations, see selection matrix at the beginning of chapter D.

Tolerance range:
yellow = .10
green = .20
red = .30

2031.31. Guide bearing, sintered guide

d_1	15 16	19 20	24 25	30 32	38 40	48 50	60 63	80
d_3	35	45	50	65	80	96	110	130
a	70	85	90	115	130	160	180	215
b	35	45	50	65	80	96	110	130
h	18	18	22	25	30	35	35	40
h_1	30	37	47	60	77	95	120	120

Ordering Code (example):

Guide bearing, sintered guide		=	2031.31.
Guide diameter d_1	32 mm	=	032.
Classification TOL	yellow	=	10
Order No		=	2031.31.032.10

subject to alterations

Guide bearing for ball bearing guide

2031.41.

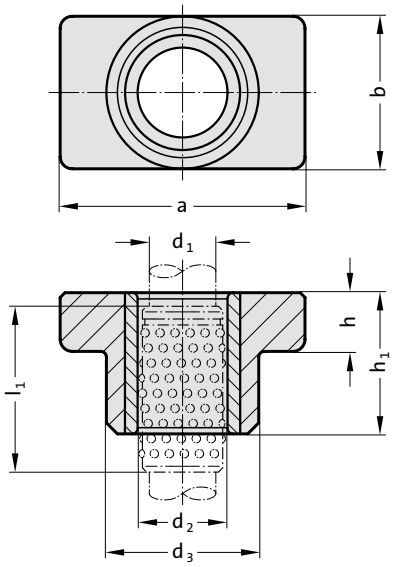

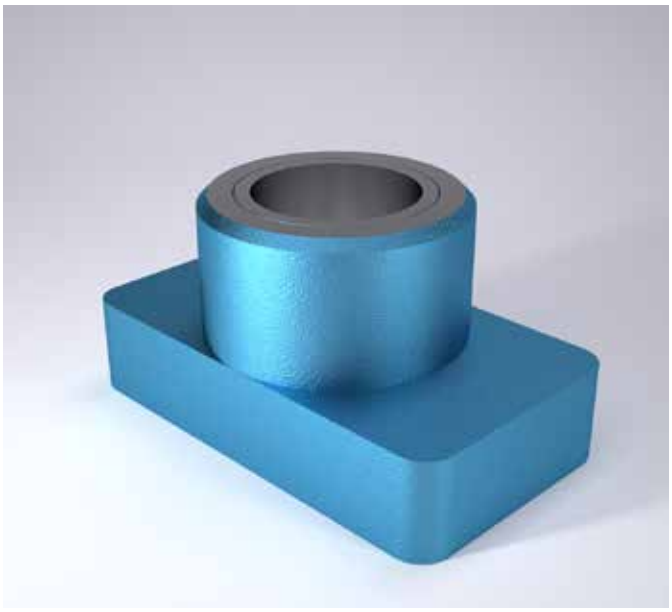

Material:

Basic body: Special cast iron
Guide bush 2061.44.: Tool steel, Hardness: 62 ± 2 HRC

Execution:

Face and top machined. Bores honed.

Note:

Notes on ball bearing type guides at the beginning of chapter D.
Preloading see pairing classification at the beginning of chapter D
Matching guide combinations, see selection matrix at the beginning of chapter D.

Tolerance range:
yellow = .10
green = .20
red = .30

Mounting example

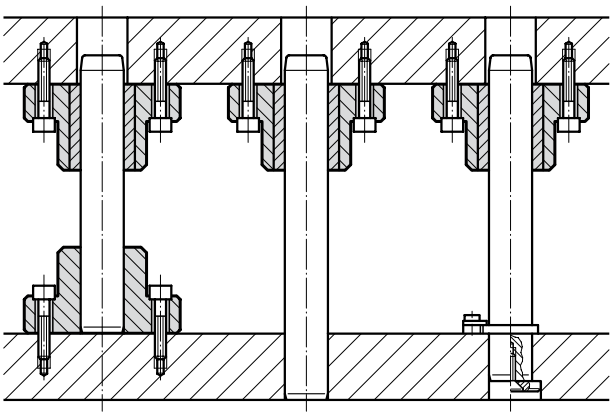

2031.41. Guide bearing for ball bearing guide

d_1	15	16	19	20	24	25	30	32	38	40	48	50	60	63
d_2	21	22	25	26	30	31	38	40	46	48	56	58	68	71
d_3	35	35	45	45	50	50	65	65	80	80	96	96	110	110
a	70	70	85	85	90	90	115	115	130	130	160	160	180	180
b	35	35	45	45	50	50	65	65	80	80	96	96	110	110
h	18	18	18	18	22	22	25	25	30	30	35	35	35	35
h_1	30	30	37	37	47	47	60	60	77	77	95	95	120	120
l_1	4	4	4	4	56	56	71	71	95	95	120	120	140	140
l*	45	45	45	45	56	56	71	71	95	95	120	120	140	140

*l = Nominal ordering length of ball cage - prefered length

Ordering Code (example):

Guide bearing for ball bearing guide		=2031.41.
Guide diameter d_1	32 mm =	032.
Classification TOL	yellow =	10
Order No		=2031.41.032.10

FIBRO

Retention bearing with screw holes

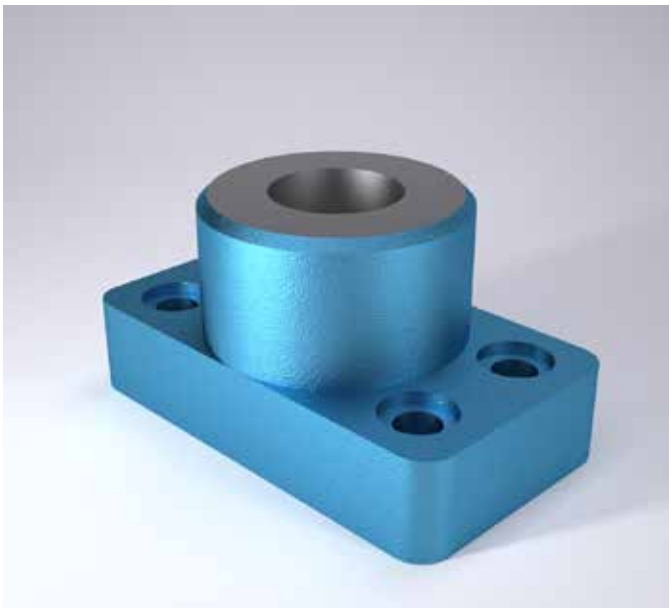

2031.02.

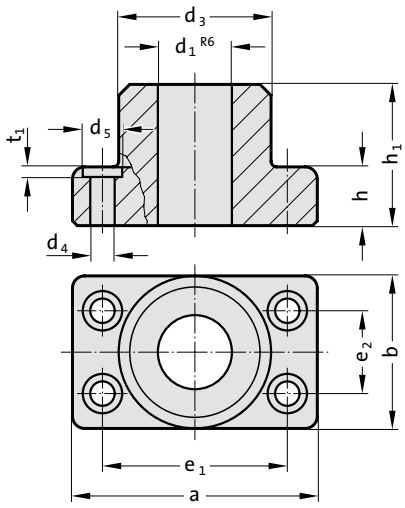

Mounting example

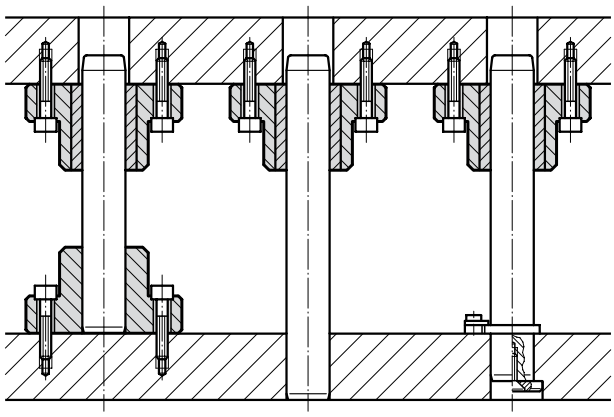

Material:

Special cast iron

Execution:

Face and top machined. Hole fine bored to d_1^{R6} fit.

Note:

Check squareness of pillars after press-fitting.

2031.02. Retention bearing with screw holes

d_1	15 16	19 20	24 25	30 32	38 40	48 50	60 63	80
d_3	35	45	50	65	80	96	110	130
d_4	6.6	9	9	11	14	18	18	22
d_5	11	15	15	18	20	26	26	33
t_1	3	3	3	3	3	4	4	4
a	70	85	90	115	130	160	180	215
b	35	45	50	65	80	96	110	130
e_1	53	64	68	83	95	118	132	160
e_2	19	24	28	34	45	55	62	75
h	18	18	22	25	30	35	35	40
h_1	30	37	47	60	77	95	120	120

Ordering Code (example):

Retention bearing with screw holes		=2031.02.
Guide diameter d_1	32 mm =	032
Order No		=2031.02.032

subject to alterations

Guide bearing with screw holes, sintered guide

2031.34.

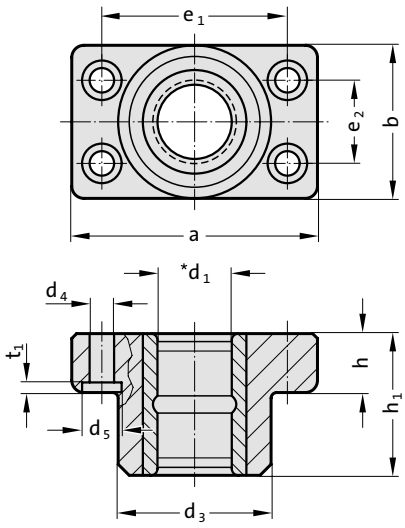

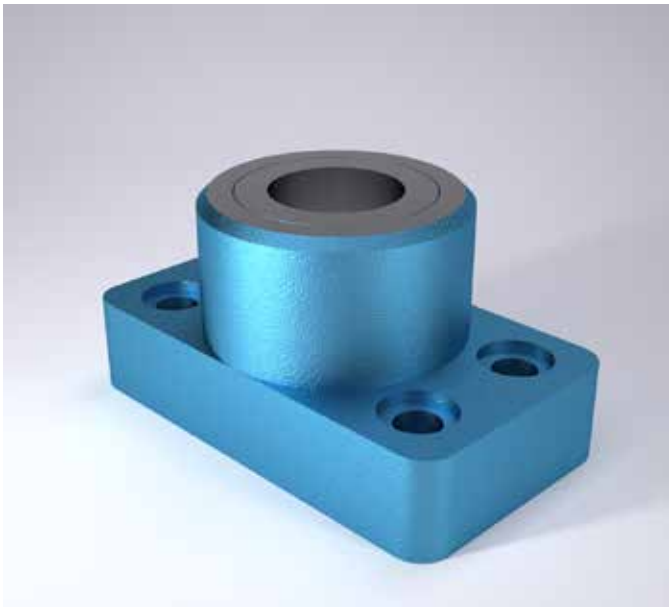

Material:

Basic body: Special cast iron
Guide bush 2051.32.: Sintered ferrite of high purity, carbonitrided, long-term lubrication

Execution:

Face and top machined. Bores honed.

Note:

Notes on sliding type guides at the beginning of chapter D.
Bearing clearance see pairing classification at the beginning of chapter D.
Matching guide combinations, see selection matrix at the beginning of chapter D.

Tolerance range:
yellow = .10
green = .20
red = .30

Mounting example

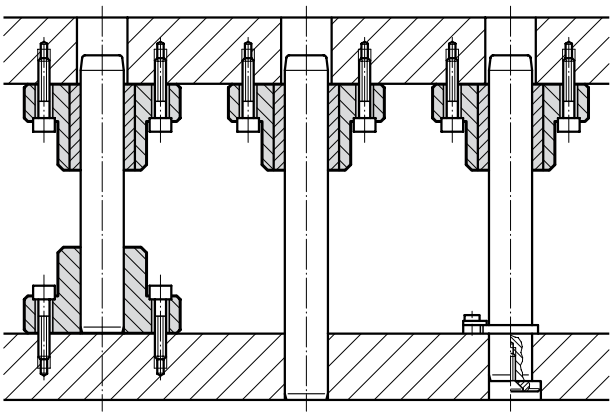

2031.34. Guide bearing with screw holes, sintered guide

d_1	15 16	19 20	24 25	30 32	38 40	48 50	60 63	80
d_3	35	45	50	65	80	96	110	130
d_4	6.6	9	9	11	14	18	18	22
d_5	11	15	15	18	20	26	26	33
t_1	3	3	3	3	3	4	4	4
a	70	85	90	115	130	160	180	215
b	35	45	50	65	80	96	110	130
e_1	53	64	68	83	95	118	132	160
e_2	19	24	28	34	45	55	62	75
h	18	18	22	25	30	35	35	40
h_1	30	37	47	60	77	95	120	120

Ordering Code (example):

Guide bearing with screw holes, sintered guide		=2031.34.
Guide diameter d_1	32 mm =	032.
Classification TOL	yellow =	10
Order No		=2031.34.032.10

FIBRO

Guide bearing with screw holes, for ball bearing guide

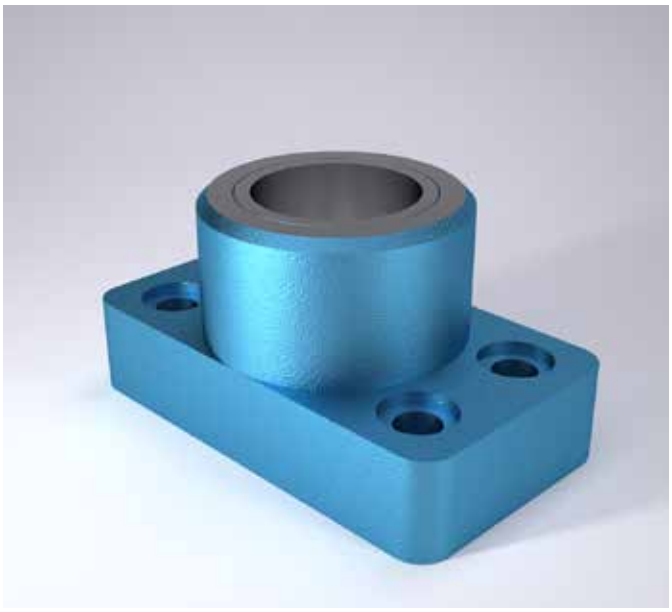

2031.42.

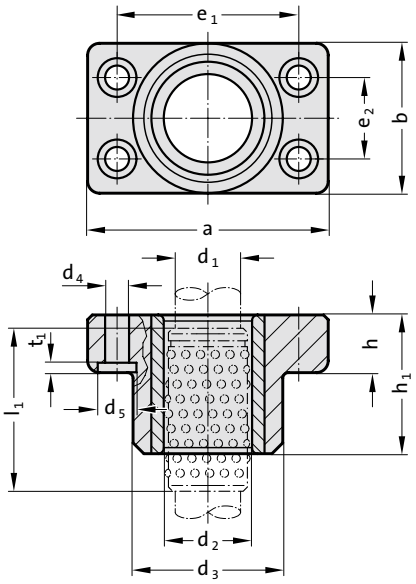

Mounting example

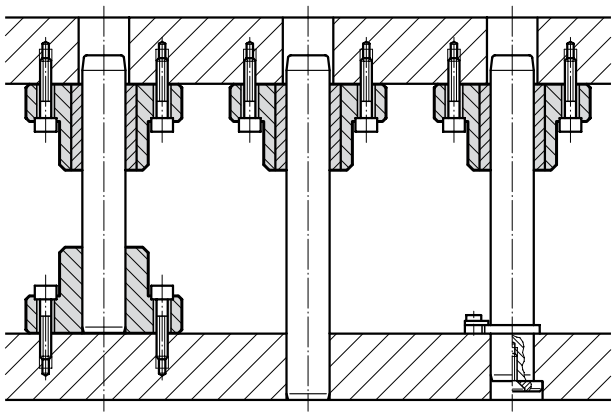

Material:

Basic body: Special cast iron
Guide bush 2061.44.: Tool steel, Hardness: 62 ± 2 HRC

Execution:

Face and top machined. Bores honed.

Note:

Notes on ball bearing type guides at the beginning of chapter D.
Preloading see pairing classification at the beginning of chapter D
Matching guide combinations, see selection matrix at the beginning of chapter D.

Tolerance range:
yellow = .10
green = .20
red = .30

2031.42. Guide bearing with screw holes, for ball bearing guide

d_1	15 16	19 20	24 25	30 32	38 40	48 50	60 63
d_2	21 22	25 26	30 31	38 40	46 48	56 58	68 71
d_3	35	45	50	65	80	96	110
d_4	6.6	9	9	11	14	18	18
d_5	11	15	15	18	20	26	26
t_1	3	3	3	3	3	4	4
a	70	85	90	115	130	160	180
b	35	45	50	65	80	96	110
e_1	53	64	68	83	95	118	132
e_2	19	24	28	34	45	55	62
h	18	18	22	25	30	35	35
h_1	30	37	47	60	77	95	120
l_1	44	44	56	70	95	120	140
l*	45	45	56	71	95	120	140

*l = Nominal ordering length of ball cage - prefered length

Ordering Code (example):

Guide bearing with screw holes, for ball bearing guide		=2031.42.
Guide diameter d_1	32 mm =	032.
Classification TOL	yellow =	10
Order No		=2031.42.032.10

subject to alterations

Retention bearing, low build height

2031.04.

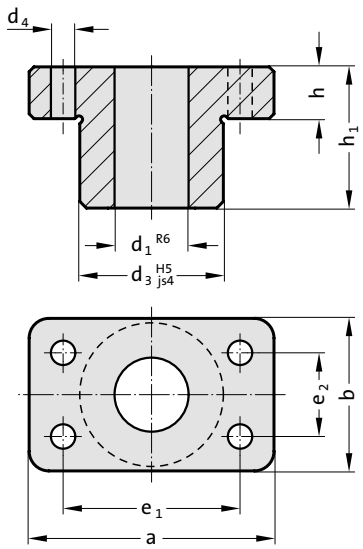

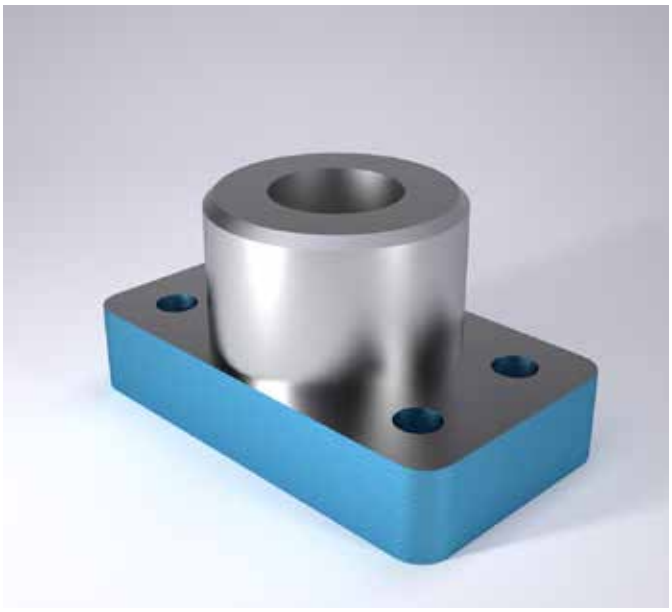

Material:
Special cast iron

Execution:
Both faces machined to dims. h; O. D. d_3 turned.
Hole fine bored to d_1 R6 - fit.

Note:
Check squareness of pillars after press-fitting.

Mounting example

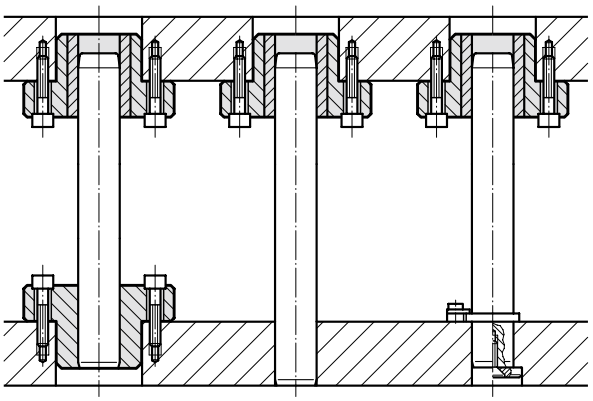

2031.04. Retention bearing, low build height

d_1	15 16	19 20	24 25	30 32	38 40	48 50	60 63	80
d_3	32	42	47	62	77	93	107	127
d_4	7	9	9	11	14	18	18	22
a	70	85	90	115	130	160	180	215
b	35	45	50	65	80	96	110	130
e_1	53	64	68	83	95	118	132	160
e_2	19	24	28	34	45	55	62	75
h	16	16	20	23	28	33	33	38
h_1	30	37	47	60	77	95	120	120

Ordering Code (example):

Retention bearing, low build height		=2031.04.
Guide diameter d_1	32 mm =	032
Order No		=2031.04.032

Guide bearing, low build height, sintered guide

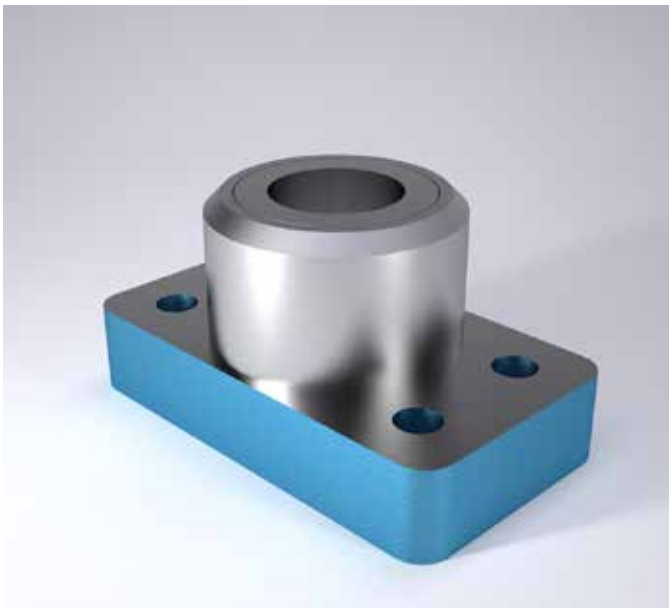

2031.38.

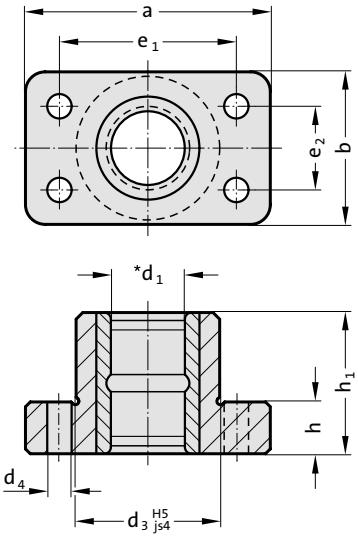

Mounting example

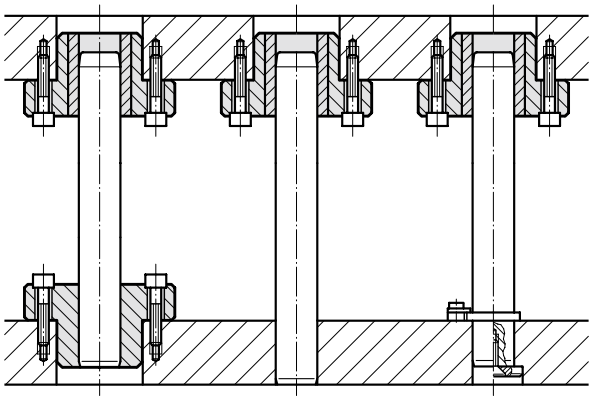

Material:

Basic body: Special cast iron
Guide bush 2051.32.: Sintered ferrite of high purity, carbonitrided, long-term lubrication

Execution:

Both faces machined to dims. h; O. D. d_3 turned.
Bores honed.

Note:

Notes on sliding type guides at the beginning of chapter D.
Bearing clearance see pairing classification at the beginning of chapter D.
Matching guide combinations, see selection matrix at the beginning of chapter D.

Tolerance range:
yellow = .10
green = .20
red = .30

2031.38. Guide bearing, low build height, sintered guide

d_1	15 16	19 20	24 25	30 32	38 40	48 50	60 63	80
d_3	32	42	47	62	77	93	107	127
d_4	7	9	9	11	14	18	18	22
a	70	85	90	115	130	160	180	215
b	35	45	50	65	80	96	110	130
e_1	53	64	68	83	95	118	132	160
e_2	19	24	28	34	45	55	62	75
h	16	16	20	23	28	33	33	38
h_1	30	37	47	60	77	95	120	120

Ordering Code (example):

Guide bearing, low build height, sintered guide		=2031.38.
Guide diameter d_1	32 mm	= 032.
Classification TOL	yellow	= 10
Order No		=2031.38.032.10

subject to alterations

Guide bearing low build height, for ball bearing guide

2031.44.

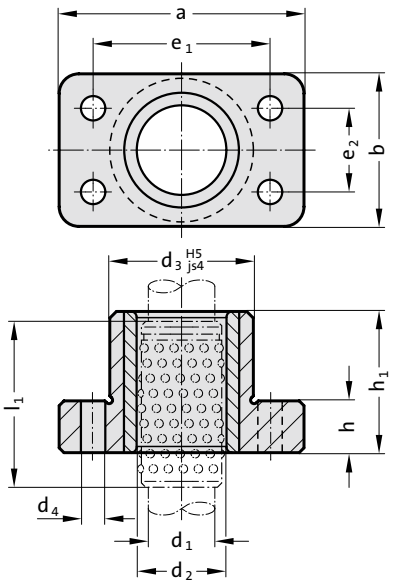

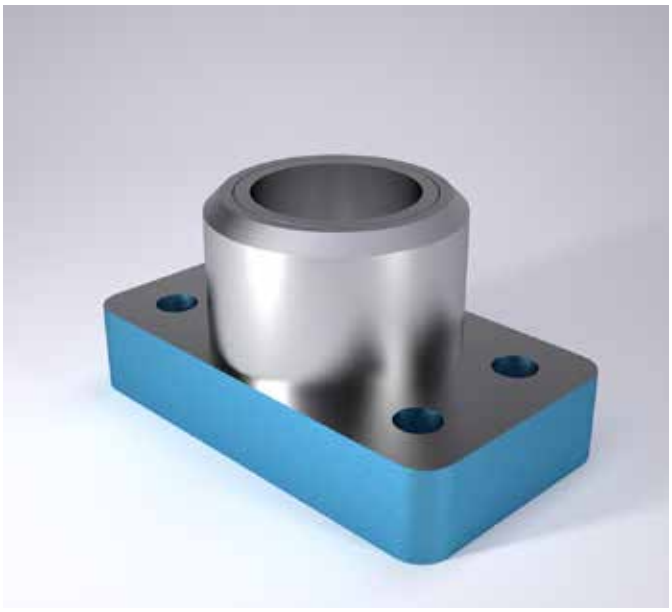

Material:

Basic body: Special cast iron
Guide bush 2061.44.: Tool steel, Hardness: 62 ± 2 HRC

Execution:

Both faces machined to dims. h; O. D. d_3 turned.
Bores honed.

Note:

Notes on ball bearing type guides at the beginning of chapter D.
Preloading see pairing classification at the beginning of chapter D
Matching guide combinations, see selection matrix at the beginning of chapter D.

Tolerance range:
yellow = .10
green = .20
red = .30

Mounting example

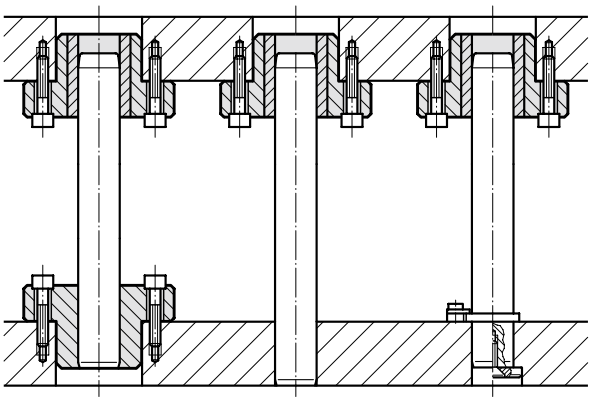

2031.44. Guide bearing low build height, for ball bearing guide

d_1	19 20	24 25	30 32	38 40	48	50
d_2	25 26	30 31	38 40	46 48	56	58
d_3	42	47	62	77	93	93
d_4	9	9	11	14	18	18
a	85	90	115	130	160	160
b	45	50	65	80	96	96
e_1	64	68	83	95	118	118
e_2	24	28	34	45	55	55
h	16	20	23	28	33	33
h_1	37	47	60	77	95	95
l_1	44	56	70	95	120	120
l*	45	56	71	95	120	10

*l = Nominal ordering length of ball cage - prefered length

Ordering Code (example):

Guide bearing low build height, for ball bearing guide		=2031.44.
Guide diameter d_1	32 mm =	032.
Classification TOL	yellow =	10
Order No		=2031.44.032.10

Guide bearing with headed guide bush with solid lubricant

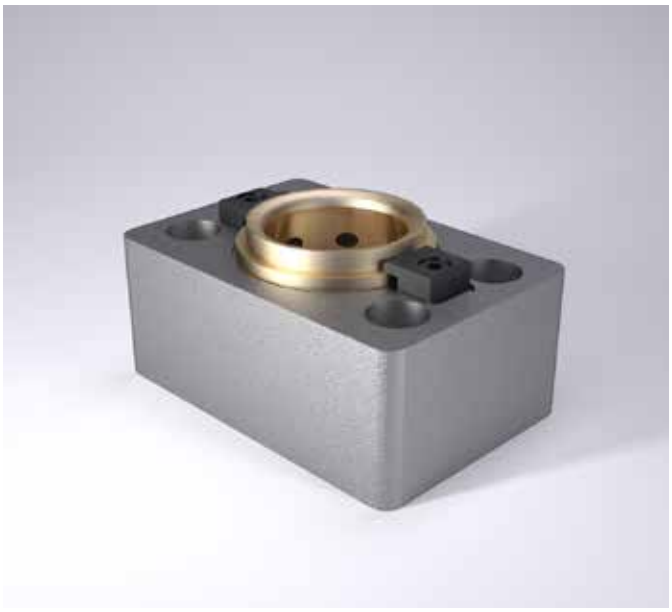

2032.70.

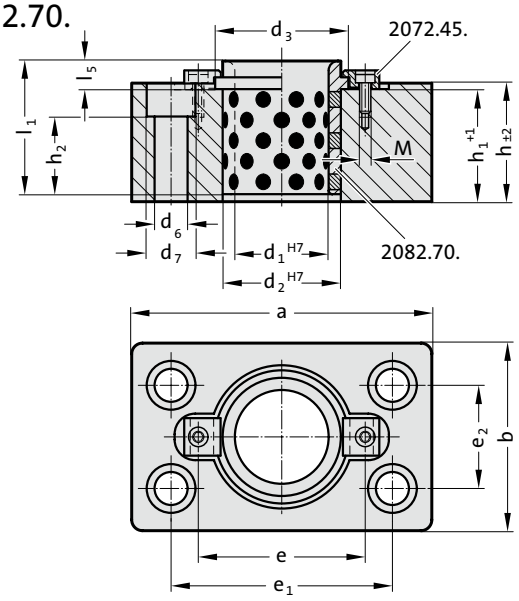

Mounting example

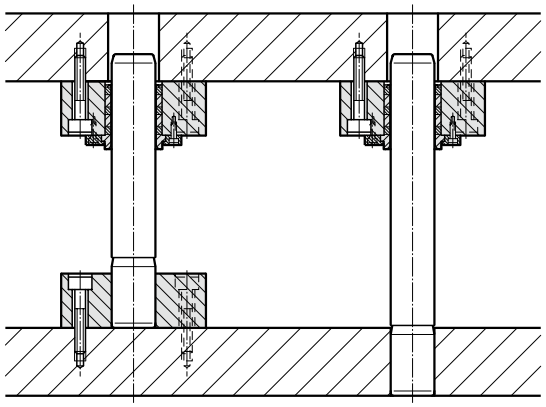

Material:

Basic body: Steel, St 37
Guide bush 2082.70.: Bronze with solid lubricant, oilless lubricating

Execution:

Face machined.

Note:

Notes on sliding type guides at the beginning of chapter D.
Matching guide combinations, see selection matrix at the beginning of chapter D.

2032.70. Guide bearing with headed guide bush with solid lubricant

Order No	d_1	a	b	h	H1	d_2	d_3	l_1	L5	d_6	d_7	h_2	e	e_1	e_2	M
2032.70.050	50	160	100	60	57	63	71	71	17	17.5	26	40	89	118	55	M6
2032.70.063	63	180	125	70	67	80	90	80	19	17.5	26	50	123	132	62	M10
2032.70.080	80	215	145	90	87	100	112	100	22	22	33	66	143	160	75	M10
2032.70.100	100	230	170	110	107	125	140	125	21	22	33	86	168	168	110	M10
2032.70.125	125	270	205	140	137	160	180	160	30	26	40	112	203	203	142	M10
2032.70.160	160	315	250	180	177	200	220	200	32	26	40	152	243	243	170	M10

Retention bearing for guide pillars for large tools

2032.02.

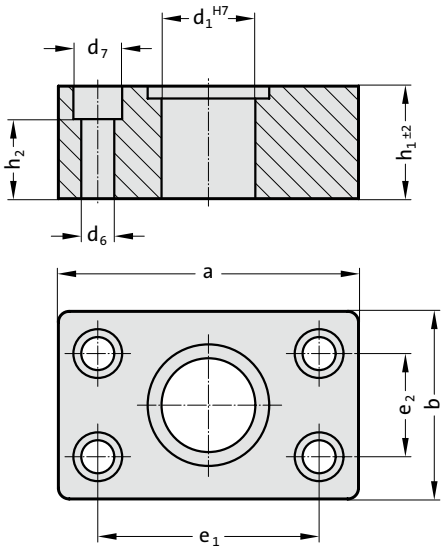



Material:
Steel, St 37

Execution:
Face machined. Hole fine bored to d_1^{H7} fit.

Note:
For guide pillars with mounting diameter r6.
Check squareness of pillars after press-fitting.

Mounting example

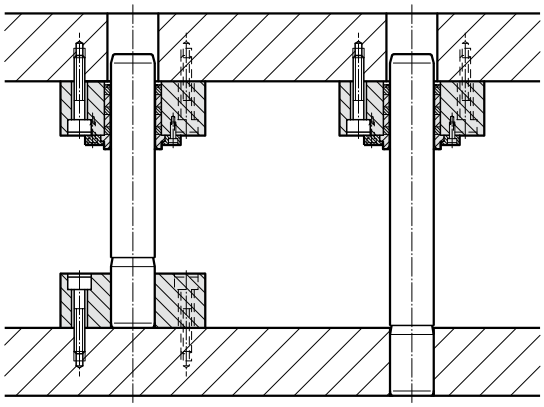

2032.02. Retention bearing for guide pillars for large tools

Order No	d_1	a	b	h_1	d_6	d_7	h_2	e_1	e_2
2032.02.050	50	160	100	70	17.5	26	40	118	55
2032.02.063	63	180	125	80	17.5	26	50	132	62
2032.02.080	80	215	145	100	22	33	66	160	75
2032.02.100	100	230	170	125	22	33	86	168	110
2032.02.125	125	270	205	140	26	40	112	203	142
2032.02.160	160	315	250	180	26	40	152	243	170

Guide bush, sintered ferrite carbonitrided with long-term lubrication, ISO 9448-2



2051.32.

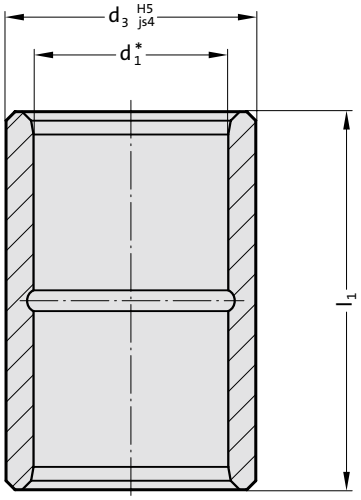

Material:
Sintered ferrite of high purity, carbonitrided, long-term lubrication

Execution:
Bearing surfaces and outside diameter precision ground.

Slip-Fit Bonding:
The position of the bearing is given by push fit holes tolerance H5. The adhesive (order no. 281.648) provides optimum push retention whilst offering the following **advantages:**
- high accuracy and stiffness
- no problems to find position when changing bushings

We do not recommend to press fit for the same reasons mentioned above.

Note:
Notes on sliding type guides at the beginning of chapter D.
* Bearing clearance see pairing classification at the beginning of chapter D.
Matching guide combinations, see selection matrix at the beginning of chapter D.
Assembly guide lines / Dimensional requirements and tolerances at the end of chapter D.
Ø 8 - Ø 12 not available in tolerance range red = .30.

Tolerance range:
yellow = .10
green = .20
red = .30

2051.32. Guide bush, sintered ferrite carbonitrided with long-term lubrication, ISO 9448-2

d_1	8	11 12	15 16	19 20	24 25	30 32	38 40	48 50	60 63	80
d_3	13.7	22	28	32	40	48	58	70	85	95.7
l_1										
15	●									
23		●	●	●	●					
30		●	●	●	●	●	●			
37		●	●	●	●	●	●	●		
47			●	●	●	●	●	●		
60			●	●	●	●	●	●	●	●
77				●	●	●	●	●	●	
95						●	●	●	●	
110										●
120							●	●	●	●

Ordering Code (example):

Guide bush, sintered ferrite carbonitrided with long-term lubrication, ISO 9448-2		=2051.32.
Guide diameter d_1	30 mm=	030.
Length l_1	30 mm=	030.
Classification TOL	yellow =	10
Order No		=2051.32.030.030.10

subject to alterations

Guide bush "ECO-LINE", bronzeplated, ISO 9448-2

2051.92.

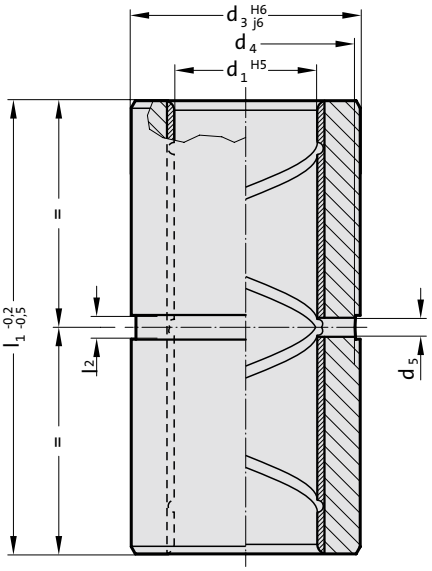



Material:
Steel, d_3 induction hardened

Execution:
Bronze coated internal bore
Outside diameter fine-ground

Slip-Fit Bonding:
The position of the bearing is given by push fit holes tolerance H5. The adhesive (order no. 281.648) provides optimum push retention whilst offering the following **advantages:**
- high accuracy and stiffness
- no problems to find position when changing bushings

We do not recommend to press fit for the same reasons mentioned above.

Note:
Notes on sliding type guides at the beginning of chapter D.
Matching guide combinations, see selection matrix at the beginning of chapter D.
Assembly guide lines / Dimensional requirements and tolerances at the end of chapter D.

2051.92. Guide bush "ECO-LINE", bronzeplated, ISO 9448-2

d_1	15 16	19 20	24 25	30 32	38 40	48 50	60 63	80
d_3	28	32	40	48	58	70	85	105
d_4	26	30	38	46	56	67	82	101
d_5	4	4	4	4	4	5	5	8
l_2	5	5	5	5	5	6	6	9
l_1								
23	●	●	●					
30	●	●	●	●	●			
37	●	●	●	●	●	●		
47	●	●	●	●	●	●		
60	●	●	●	●	●	●	●	
77		●	●	●	●	●	●	
95				●	●	●	●	
120					●	●	●	●
135								●

Ordering Code (example):

Guide bush "ECO-LINE", bronzeplated, ISO 9448-2		=2051.92.
Guide diameter d_1	32 mm=	032.
Length l_1	30 mm=	030
Order No		=2051.92.032.030

Guide bush "ECO-LINE", Bronze with solid lubrication rings, ISO 9448-2



2051.72.

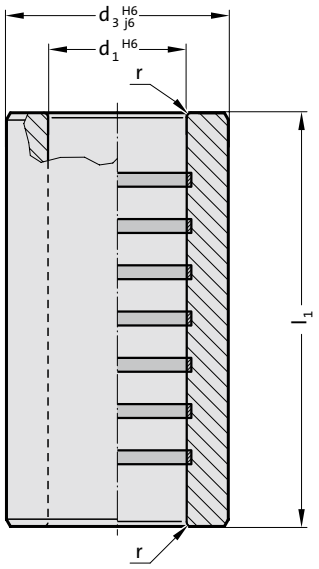

Material:
Bronze with solid lubricant, oilless lubricating

Execution:
Contact surface with solid lubricant rings
Outside diameter precision ground

Slip-Fit Bonding:
The position of the bearing is given by push fit holes tolerance H5. The adhesive (order no. 281.648) provides optimum push retention whilst offering the following **advantages:**
- high accuracy and stiffness
- no problems to find position when changing bushings

We do not recommend to press fit for the same reasons mentioned above.

Note:
Notes on sliding type guides at the beginning of chapter D.
Matching guide combinations, see selection matrix at the beginning of chapter D.
Assembly guide lines / Dimensional requirements and tolerances at the end of chapter D.

2051.72. Guide bush "ECO-LINE", Bronze with solid lubrication rings, ISO 9448-2

d_1	15 16	19 20	24 25	30 32	38 40	48 50	60 63	80
d_3	28	32	40	48	58	70	85	105
r	2	2	2.5	2.5	3	3	3.5	4
l_1								
23	●	●	●					
30	●	●	●	●	●			
37	●	●	●	●	●	●		
47	●	●	●	●	●	●		
60		●	●	●	●	●	●	
77			●	●	●	●	●	
95				●	●	●	●	
120						●	●	●
135								●

Ordering Code (example):

Guide bush "ECO-LINE", Bronze with solid lubrication rings, ISO 9448-2		=2051.72.
Guide diameter d_1	32 mm=	032.
Length l_1	30 mm=	030
Order No		=2051.72.032.030

subject to alterations

Guide bush for ball bearing, ISO 9448-3

2061.44.

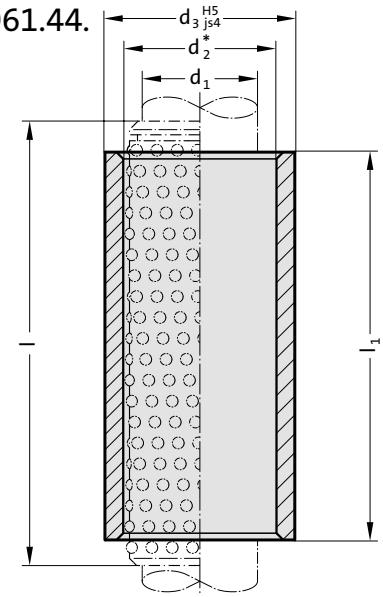



Material:
Tool steel, hardened 62 ± 2 HRC

Execution:
Bearing surfaces honed,
outside diameter precision ground.

Slip-Fit Bonding:
The position of the bearing is given by push fit holes tolerance H5. The adhesive (order no. 281.648) provides optimum push retention whilst offering the following **advantages:**
- high accuracy and stiffness
- no problems to find position when changing bushings

We do not recommend to press fit for the same reasons mentioned above.

Note:
Notes on ball bearing type guides at the beginning of chapter D.
* Preloading see pairing classification at the beginning of chapter D
Matching guide combinations, see selection matrix at the beginning of chapter D.
Assembly guide lines / Dimensional requirements and tolerances at the end of chapter D.
Ø 8 - Ø 12 not available in tolerance range red = .30.

Tolerance range:
yellow = .10
green = .20
red = .30

2061.44. Guide bush for ball bearing, ISO 9448-3

d_1	8	10	11	12	15	16	19	20	24	25	30	32	38	40	48	50	60	63	80
d_2	11	14	15	16	21	22	25	26	30	31	38	40	46	48	56	58	68	71	92
d_3	18	22	22	22	28	28	32	32	40	40	48	48	58	58	70	70	85	85	105
l_1 / l*																			
30 / 40	●	●	●	●															
23 / 40		●	●	●															
37 / 40		●	●	●															
23 / 45					●	●	●	●	●	●									
30 / 45					●	●	●	●	●	●	●	●	●	●					
37 / 45					●	●	●	●	●	●									
47 / 56					●	●	●	●	●	●	●	●							
60 / 71					●	●	●	●	●	●	●	●							
77 / 95							●	●	●	●	●	●	●	●	●	●	●	●	
37 / 50											●	●	●	●	●	●			
95 / 120											●	●	●	●	●	●	●	●	
47 / 63													●	●	●	●			
60 / 80													●	●	●	●			
120 / 140													●	●	●	●	●	●	●
60 / 95																	●	●	

*l = Nominal ordering length of ball cage - prefered length

Ordering Code (example):

Guide bush for ball bearing, ISO 9448-3		=2061.44.
Guide diameter d_1	25 mm	= 025.
Installation length l_1	23 mm	= 023.
Classification TOL	yellow	= 10
Order No		=2061.44.025.023.10

FIBRO

Guide bush for ball bearing, AFNOR



Mounting example

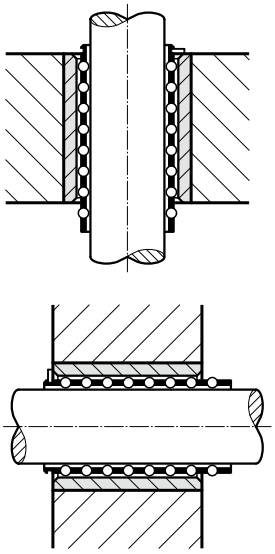

206.49.

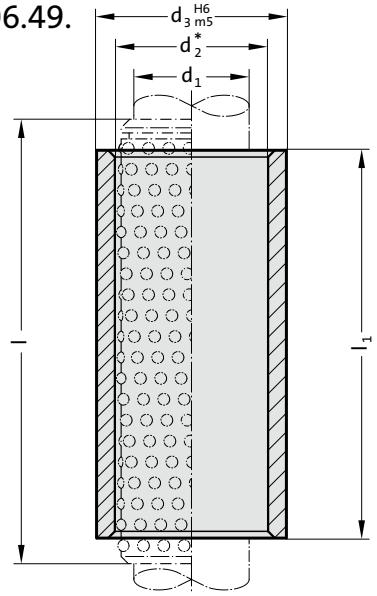

Material:
Tool steel, hardened 62 ± 2 HRC

Execution:
Bearing surfaces honed,
outside diameter precision ground.

Slip-Fit Bonding:
The position of the bearing is given by push fit holes tolerance H6. The adhesive (order no. 281.648) provides optimum push retention whilst offering the following **advantages:**
- high accuracy and stiffness
- no problems to find position when changing bushings

We do not recommend to press fit for the same reasons mentioned above.

Note:
Notes on ball bearing type guides at the beginning of chapter D.
*Preloading see pairing classification at the beginning of chapter D
Matching guide combinations, see selection matrix at the beginning of chapter D.
Assembly guide lines / Dimensional requirements and tolerances at the end of chapter D.
Tolerance range:
yellow = .10
green = .20
red = .30

206.49. Guide bush for ball bearing, AFNOR

d_1	16	20	25	32	40	50
d_2	22	26	31	40	48	58
d_3	28	32	40	50	63	80
l_1 / l*						
35 / 45	●	●				
40 / 45	●	●	●			
50 / 56	●	●	●			
60 / 71	●	●	●	●		
70 / 80		●	●	●	●	●
80 / 95		●	●	●	●	●
90 / 95			●			
45 / 56				●		
90 / 105				●	●	●
100 / 120				●	●	●
55 / 63					●	
120 / 140					●	●

*l = Nominal ordering length of ball cage - prefered length

Ordering Code (example):

Guide bush for ball bearing, AFNOR		=206.49.	
Guide diameter d_1	32 mm	=	032.
Installation length l_1	45 mm	=	045.
Classification TOL	yellow	=	10
Order No		=206.49.	032. 045. 10

Guide bush for ball bearing, with stroke limitation

2061.47.

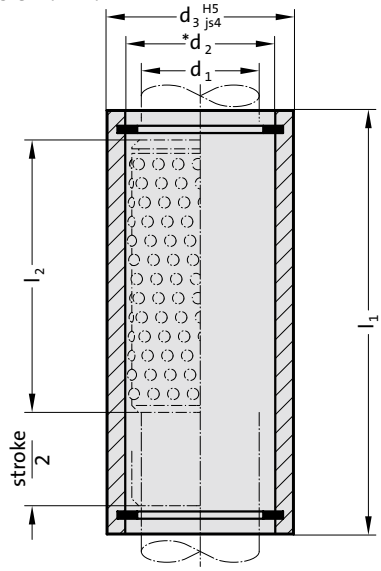



Material:
Tool steel, hardened 62 ± 2 HRC

Execution:
Bearing surfaces honed,
outside diameter precision ground.

Slip-Fit Bonding:
The position of the bearing is given by push fit holes tolerance H5. The adhesive (order no. 281.648) provides optimum push retention whilst offering the following **advantages:**
- high accuracy and stiffness
- no problems to find position when changing bushings

We do not recommend to press fit for the same reasons mentioned above.

Note:
Notes on ball bearing type guides at the beginning of chapter D.
* Preloading see pairing classification at the beginning of chapter D
Matching guide combinations, see selection matrix at the beginning of chapter D.
Assembly guide lines / Dimensional requirements and tolerances at the end of chapter D.

Tolerance range:
yellow = .10
green = .20
red = .30

2061.47. Guide bush for ball bearing, with stroke limitation

d_1	15 16	19 20	24 25	30 32	38 40	48 50	60 63
d_2	21 22	25 26	30 31	38 40	46 48	56 58	68 71
d_3	28	32	40	48	58	70	85
l_1 / l_2*							
60 / 44	●						
77 / 44		●	●				
95 / 50				●			
120 / 65					●		
120 / 80						●	
120 / 95							●

*l_2 = Manufacturing length of ball cage

Ordering Code (example):

Guide bush for ball bearing, with stroke limitation		=2061.47.
Guide diameter d_1	32 mm	=032.
Installation length l_1	95 mm	=095.
Classification TOL	yellow	=10
Order No		=2061.47.032.095.10

FIBRO

Ball cage with circlip groove, Brass



206.71.

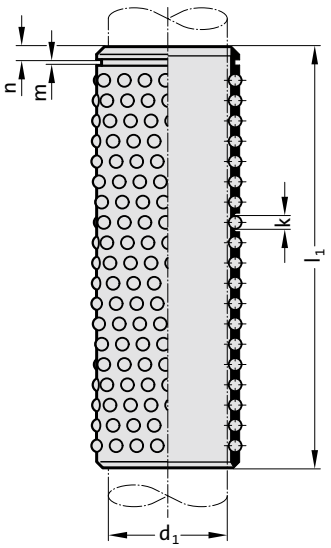

Material:

Cage: Brass
Balls: Steel hardened (DIN 5401)

Note:

Ball cages from Ø 10 has a groove for circlip to DIN 471.
Notes on ball bearing type guides at the beginning of chapter D.
Bearing life and dynamic load indexes see at the end of chapter D.
l = Nominal ordering length
l_1 = Manufacturing length

206.71. Ball cage with circlip groove, Brass

d_1	8	10 11 12	15	16	19	20	24 25	30	32	38 40	48	50	60 63	80
k	1.5	2	3	3	3	3	3	4	4	4	4	4	4	6
n	-	1.1	1.6	1.6	1.6	1.6	1.6	2.1	2.1	2.1	2.1	2.1	2.1	3
l / l_1	Total number of balls													
40 / 39	80	176												
56 / 57		272												
45 / 44			144	144	180	180	180							
56 / 56			192	192	240	240	240							
63 / 64			224	224										
71 / 72			256	256	320	320	320							
24 / 24				64		80								
28 / 28				80		100								
31 / 32					120	120	120							
80 / 80					360	360	360	280	280	336	392	392		
95 / 96					440	440	440							
40 / 40							160	120	120					
120 / 120							560	440	440	528	616	616	704	
45 / 45								140	140	168				
50 / 50								160	160	192	224	224		
56 / 55								180	180	216				
71 / 70								240	240					
75 / 75								260						
95 / 95								340	340	408	476	476	544	
105 / 105								380	380	456	532	532	608	
140 / 140								520	520	624	728	728	832	648
160 / 160								600	600	720	840	840	960	
63 / 65										264	308	308		
180 / 180										816	952	952	1088	
200 / 200										912	1064	1064	1216	
240 / 240										1104	1288	1288	1472	
128 / 128												616		
120 / 119														540
160 / 161														756
180 / 182														864
200 / 203														972
240 / 238														1152

Ordering Code (example):

Ball cage with circlip groove, Brass	=206.71.	
Guide diameter d_1	38 mm=	038.
Nominal ordering length l	45 mm=	045
Order No	=206.71.	038.045

subject to alterations

Ball cage with circlip groove, Aluminium

Material:

Cage: Aluminium
Balls: Steel hardened (DIN 5401)

Note:

Ball cages from ø 10 has a groove for circlip to DIN 471.
Notes on ball bearing type guides at the beginning of chapter D.
Bearing life and dynamic load indexes see at the end of chapter D.
l = Nominal ordering length
l_1 = Manufacturing length

2060.61.

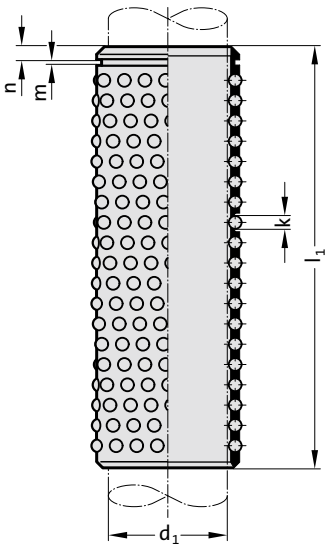



2060.61. Ball cage with circlip groove, Aluminium

d_1	10	11 12	15	16	19	20	24 25	30 32	38 40	48 50	60 63	80
k	2	2	3	3	3	3	3	4	4	4	4	6
n	1.1	1.1	1.6	1.6	1.6	1.6	1.6	2.1	2.1	2.1	2.1	3
l / l_1	Total number of balls											
40 / 39	176	176										
56 / 57	272	272										
45 / 44			144	144	180	180	180					
56 / 56			192	192	240	240	240					
63 / 64			224	224								
71 / 72			256	256	320	320	320					
24 / 24				64		80						
28 / 28				80		100						
31 / 32					120	120	120					
80 / 80					360	360	360	280	336	392		
95 / 96					440	440	440					
40 / 40							160	120				
120 / 120							560	440	528	616	704	
45 / 45								140	168			
50 / 50								160	192	224		
56 / 55								180	216			
71 / 70								240				
95 / 95								340	408	476	544	
105 / 105								380	456	532	608	
140 / 140								520	624	728	832	648
160 / 160								600	720	840	960	
63 / 65									264	308		
180 / 180									816	952	1088	
200 / 200									912	1064	1216	
240 / 240									1104	1288	1472	
120 / 119												540
160 / 161												756
180 / 182												864
200 / 203												972
240 / 238												1152

Ordering Code (example):

Ball cage with circlip groove, Aluminium		=2060.61.
Guide diameter d_1	38 mm=	038.
Nominal ordering length l	50 mm=	050
Order No		=2060.61.038.050

FIBRO

Ball cage with assembly aid, Brass



206.73.

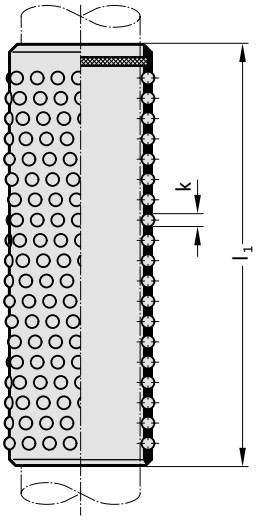

Material:

Cage: Brass
Balls: Steel hardened (DIN 5401)

Note:

No assistant is needed for their assembly. These cages are equipped with a suitably positioned brake ring insert. That ensures equal cage spacing especially on die sets with multiple pillars.
Notes on ball bearing type guides at the beginning of chapter D.
Bearing life and dynamic load indexes see at the end of chapter D.
Nominal ordering length
l_1 = Manufacturing length

206.73. Ball cage with assembly aid, Brass

d_1	10	11 12	15	16	19	20	24 25	30 32	38 40	48 50	60 63	80
k	2	2	3	3	3	3	3	4	4	4	4	6
l / l_1	Total number of balls											
40 / 39	176	176										
56 / 57	272	272										
45 / 44			144	144	180	180	180					
56 / 56			192	192	240	240	240					
63 / 64			224	224								
71 / 72			256	256	320	320	320					
24 / 24				64		80						
28 / 28				80		100						
31 / 32					120	120	120					
80 / 80					360	360	360	280	336	392		
95 / 96					440	440	440					
40 / 40							160	120				
120 / 120							560	440	528	616	704	
45 / 45								140	168			
50 / 50								160	192	224		
56 / 55								180	216			
71 / 70								240				
95 / 95								340	408	476	544	
105 / 105								380	456	532	608	
140 / 140								520	624	728	832	648
160 / 160								600	720	840	960	
63 / 65									264	308		
180 / 180									816	952	1088	
200 / 200									912	1064	1216	
240 / 240									1104	1288	1472	
120 / 119												540
160 / 161												756
180 / 182												864
200 / 203												972
240 / 238												1152

Ordering Code (example):

Ball cage with assembly aid, Brass		=206.73.
Guide diameter d_1	38 mm=	038.
Nominal ordering length l	50 mm=	050
Order No		=206.73. 038.050

subject to alterations

Ball cage with assembly aid, Aluminium

Material:

Cage: Aluminium
Balls: Steel hardened (DIN 5401)

Note:

No assistant is needed for their assembly.
These cages are equipped with a suitably positioned brake ring insert. That ensures equal cage spacing especially on die sets with multiple pillars.
Notes on ball bearing type guides at the beginning of chapter D.
Bearing life and dynamic load indexes see at the end of chapter D.
Nominal ordering length
l_1 = Manufacturing length

2060.63.

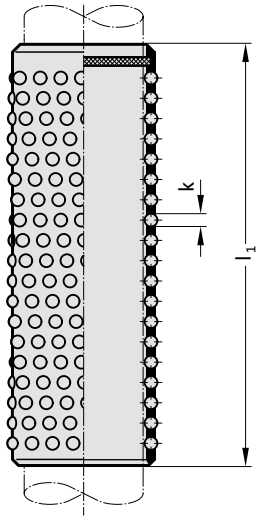



2060.63. Ball cage with assembly aid, Aluminium

d_1	10	11 12	15	16	19	20	24 25	30 32	38 40	48 50	60 63	80
k	2	2	3	3	3	3	3	4	4	4	4	6
l / l_1	Total number of balls											
40 / 39	176	176										
56 / 57	272	272										
45 / 44			144	144	180	180	180					
56 / 56			192	192	240	240	240					
63 / 64			224	224								
71 / 72			256	256	320	320	320					
24 / 24				64		80						
28 / 28				80		100						
31 / 32					120	120	120					
80 / 80					360	360	360	280	336	392		
95 / 96					440	440	440					
40 / 40							160	120				
120 / 120							560	440	528	616	704	
45 / 45								140	168			
50 / 50								160	192	224		
56 / 55								180	216			
71 / 70								240				
95 / 95								340	408	476	544	
105 / 105								380	456	532	608	
140 / 140								520	624	728	832	648
160 / 160								600	720	840	960	
63 / 65									264	308		
180 / 180									816	952	1088	
200 / 200									912	1064	1216	
240 / 240									1104	1288	1472	
120 / 119												540
160 / 161												756
180 / 182												864
200 / 203												972
240 / 238												1152

Ordering Code (example):

Ball cage with assembly aid, Aluminium		=2060.63.
Guide diameter d_1	38 mm=	038.
Nominal ordering length l	50 mm=	050
Order No		=2060.63.038.050

FIBRO

Ball cage with circlip and fastening ring groove, Brass



206.75.

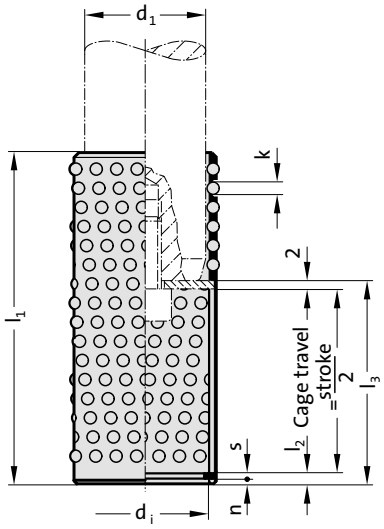

Material:

Cage: Brass
Balls: Steel hardened (DIN 5401)

Note:

Notes on ball bearing type guides at the beginning of chapter D.
Bearing life and dynamic load indexes see at the end of chapter D.
l = Nominal ordering length
l_1 = Manufacturing length

206.75. Ball cage with circlip and fastening ring groove, Brass

d_1	19	20	24	25	30	32	38	40	48	50	60	63
d_i x s	20 x 1	21 x 1	25 x 1.2	26 x 1.2	31 x 1.2	33 x 1.2	39 x 1.5	41 x 1.75	50 x 2	51 x 2	60 x 2	63 x 2
k	3	3	3	3	4	4	4	4	4	4	4	4
l_2	2.6	2.6	2.6	2.6	2.6	2.6	3.45	3.45	4.3	4.3	4.3	4.3
n	1.3	1.3	1.3	1.3	1.3	1.3	1.85	1.6	2.15	2.15	2.15	2.15
l / l_1	l_3											
56 / 56	31	31	31	31								
72 / 72	41	41	41	41								
80 / 80	51	51	51	51	51	51	51	51	51	51		
70 / 70					41	41						
95 / 95					61	61	61	61	61	61	61	61
105 / 105					61	61	61	61				
120 / 120							73	73	73	73	73	73
140 / 140											83	83

Ordering Code (example):

Ball cage with circlip and fastening ring groove, Brass		=206.75.
Guide diameter d_1	38 mm=	038.
Nominal ordering length l	80 mm=	080.
Groove length l_3	51 mm=	051
Order No		=206.75. 038.080.051

subject to alterations

Ball cage with circlip and fastening ring groove, Aluminium

Material:

Cage: Aluminium
Balls: Steel hardened (DIN 5401)

Note:

Notes on ball bearing type guides at the beginning of chapter D.
Bearing life and dynamic load indexes see at the end of chapter D.
l = Nominal ordering length
l_1 = Manufacturing length

2060.65.

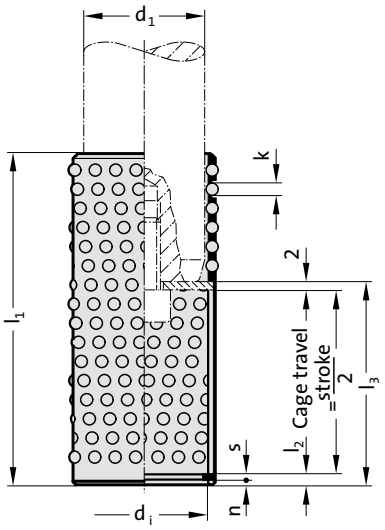



2060.65. Ball cage with circlip and fastening ring groove, Aluminium

d_1	19	20	24	25	30	32	38	40	48	50	60	63
d_i x s	20 x 1	21 x 1	25 x 1.2	26 x 1.2	31 x 1.2	33 x 1.2	39 x 1.5	41 x 1.75	50 x 2	51 x 2	60 x 2	63 x 2
k	3	3	3	3	4	4	4	4	4	4	4	4
l_2	2.6	2.6	2.6	2.6	2.6	2.6	3.45	3.45	4.3	4.3	4.3	4.3
n	1.3	1.3	1.3	1.3	1.3	1.3	1.85	1.6	2.15	2.15	2.15	2.15
l / l_1	l_3											
56 / 56	31	31	31	31								
72 / 72	41	41	41	41								
80 / 80	51	51	51	51	51	51	51	51	51	51		
70 / 70					41	41						
95 / 95					61	61	61	61	61	61	61	61
105 / 105					61	61	61	61				
120 / 120							73	73	73	73	73	73
140 / 140											83	83

Ordering Code (example):

Ball cage with circlip and fastening ring groove, Aluminium		=2060.65.
Guide diameter d_1	38 mm=	038.
Nominal ordering length l	80 mm=	080.
Groove length l_3	51 mm=	051
Order No		=2060.65.038.080.051

FIBRO

Headed guide bush with ball cage retainer



2081.67.

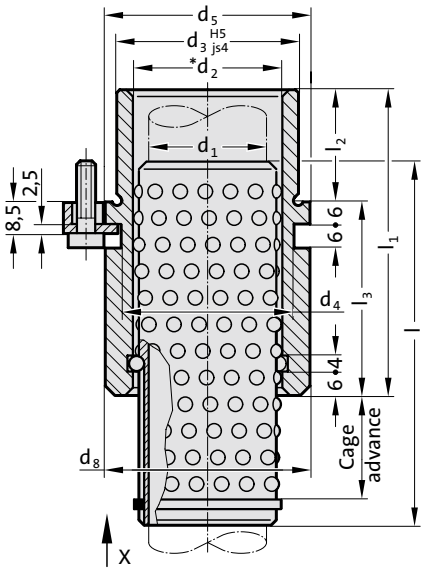

Material:

Bush: Tool steel
Hardness: 62 ± 2 HRC
Cage: Brass
Balls: Steel hardened (DIN 5401)

Note:

Ball cage position - please specify the required cage advance with order.
FIBRO Ball Cage Retainers ensure optimum starting position of ball cages on inverted die sets - even if pillars retract from guide bushes. The application determines the cage advance. Note that cage travel is half the stroke length.
In this context it is of importance to note the minimum constructional length.
The cage advance should be chosen so that during normal operation of the tool, optimum position is achieved.
*Preloading see pairing classification at the beginning of chapter D
Matching guide combinations, see selection matrix at the beginning of chapter D.
Price and delivery on request!

Tolerance range:
yellow = .10
green = .20
red = .30

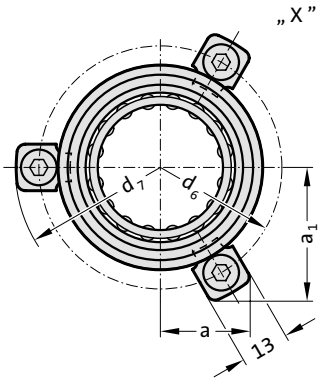

2081.67. Headed guide bush with ball cage retainer

d_1	19 20	24 25	30 32	38 40	48 50	60 63
d_2	25 26	30 31	38 40	46 48	56 58	68 71
d_3	32	40	48	58	70	85
d_4	32	40	48	58	70	85
d_5	40	48	56	66	80	95
d_6	52	60	67	77	91	106
d_7	64.7	72.7	79.7	89.7	103.7	118.7
d_8	38.9	46	53	63	77	92
l_1	59	79	93	108	127	150
l_2	23	23	30	37	47	60
l_3	36	56	63	71	80	90
l	72	96	120	140	140	160
a	20.7	22.65	24.4	35.3	40.2	45.5
a_1	30	33.4	36.4	35.3	40.2	45.5

Ordering Code (example):

Headed guide bush with ball cage retainer		=2081.67.
Guide diameter d_1	38 mm=	038.
Cage advance VL	5 mm =	005.
Classification TOL	yellow=	10
Order No		=2081.67.038.005.10

subject to alterations

Headed guide bush with ball cage retainer

2081.68.

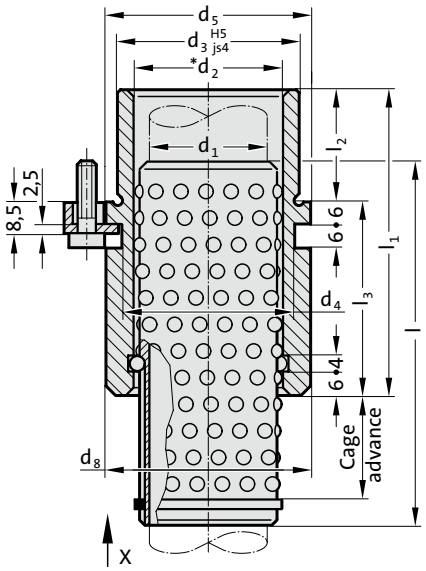



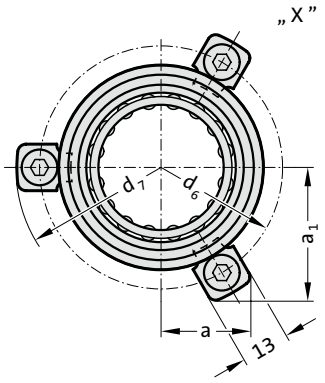

Material:

Bush: Tool steel
Hardness: 62 ± 2 HRC
Cage: Aluminium
Balls: Steel hardened (DIN 5401)

Note:

Ball cage position - please specify the required cage advance with order.
FIBRO Ball Cage Retainers ensure optimum starting position of ball cages on inverted die sets - even if pillars retract from guide bushes. The application determines the cage advance. Note that cage travel is half the stroke length.
In this context it is of importance to note the minimum constructional length.
The cage advance should be chosen so that during normal operation of the tool, optimum position is achieved.
The attachment is with 3 Screw clamp, from Ø d_1 = 38 with 4 Screw clamp , which are included in delivery (Order No: 207.45 - Screw clamp incl. socket cap screw DIN 6912, Head Ø 13).
*Preloading see pairing classification at the beginning of chapter D
Matching guide combinations, see selection matrix at the beginning of chapter D.
Price and delivery on request!
Tolerance range:
yellow = .10; green = .20; red = .30

2081.68. Headed guide bush with ball cage retainer

d_1	19 20	24 25	30 32	38 40	48 50	60 63
d_2	25 26	30 31	38 40	46 48	56 58	68 71
d_3	32	40	48	58	70	85
d_4	32	40	48	58	70	85
d_5	40	48	56	66	80	95
d_6	52	60	67	77	91	106
d_7	64.7	72.7	79.7	89.7	103.7	118.7
d_8	38.9	46	53	63	77	92
l_1	59	79	93	108	127	150
l_2	23	23	30	37	47	60
l_3	36	56	63	71	80	90
l	72	96	120	140	140	160
a	20.7	22.65	24.4	35.3	40.2	45.5
a_1	30	33.4	36.4	35.3	40.2	45.5

Headed guide bush with ball cage retainer		=	2081.68.
Guide diameter d_1	38 mm	=	038.
Cage advance VL	5 mm	=	005.
Classification TOL	yellow mm	=	10
Order No		=	2081.68. 038. 005. 10

FIBRO

Flanged guide bush with ball cage retainer



2091.67.

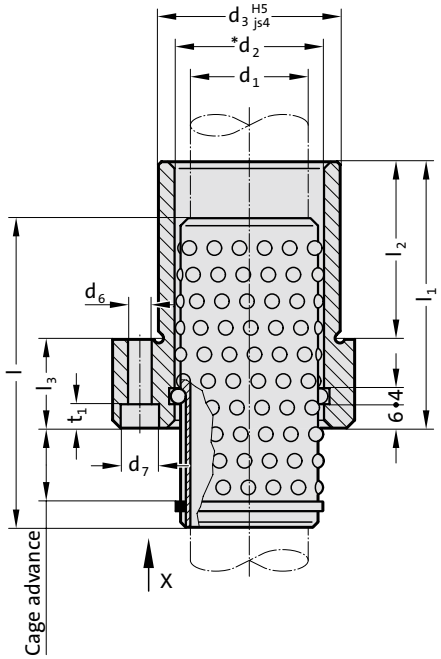

Material:

Bush: Tool steel
Hardness: 62 ± 2 HRC
Cage: Brass
Balls: Steel hardened (DIN 5401)

Note:

Ball cage position - please specify the required cage advance with order.
FIBRO Ball Cage Retainers ensure optimum starting position of ball cages on inverted die sets - even if pillars retract from guide bushes. The application determines the cage advance. Note that cage travel is half the stroke length.
In this context it is of importance to note the minimum constructional length.
The cage advance should be chosen so that during normal operation of the tool, optimum position is achieved.
*Preloading see pairing classification at the beginning of chapter D
Matching guide combinations, see selection matrix at the beginning of chapter D.
Price and delivery on request!

„ X ”

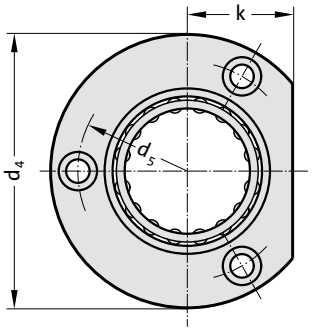

Tolerance range:
yellow = .10
green = .20
red = .30

2091.67. Flanged guide bush with ball cage retainer

d_1	19 20	24 25	30 32	38 40	48 50	60 63	80
d_2	25 26	30 31	38 40	46 48	56 58	68 71	92
d_3	32	40	48	58	70	85	105
d_4	50	63	72	85	104	120	148
d_5	40	50	58	70	86	100	125
d_6	4.5	5.5	5.5	6.6	9	9	11
d_7	8	10	10	11	15	15	18
t_1	4.6	5.7	5.7	6.8	9	9	11
k	18	23	28	33	38	46	56
l_1	52	62	72	77	102	102	125
l_2	37	37	47	47	60	60	75
l_3	15	25	25	30	42	42	50
l	72	72	80	95	105	120	140

Ordering Code (example):

Flanged guide bush with ball cage retainer		=2091.67.
Guide diameter d_1	38 mm=	038.
Cage advance VL	5 mm =	005.
Classification TOL	yellow =	10
Order No		=2091.67.038.005.10

subject to alterations

Flanged guide bush with ball cage retainer

2091.68.

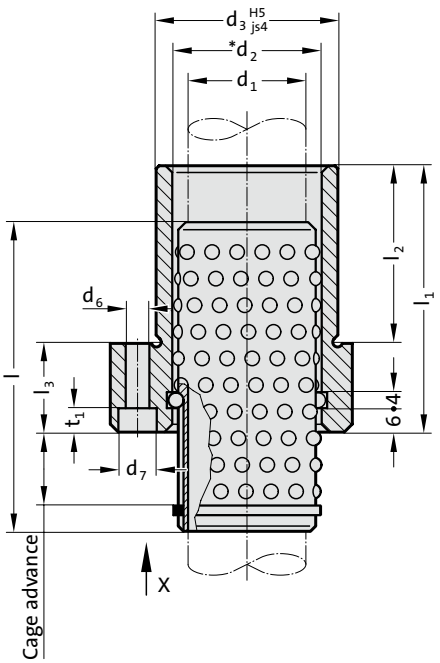

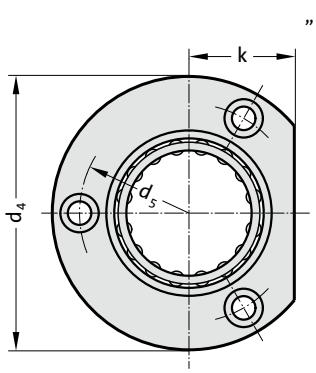



Material:

Bush: Tool steel
Hardness: 62 ± 2 HRC
Cage: Aluminium
Balls: Steel hardened (DIN 5401)

Note:

Ball cage position - please specify the required cage advance with order.
FIBRO Ball Cage Retainers ensure optimum starting position of ball cages on inverted die sets - even if pillars retract from guide bushes. The application determines the cage advance. Note that cage travel is half the stroke length.
In this context it is of importance to note the minimum constructional length.
The cage advance should be chosen so that during normal operation of the tool, optimum position is achieved.
*Preloading see pairing classification at the beginning of chapter D
Matching guide combinations, see selection matrix at the beginning of chapter D.
Price and delivery on request!
Tolerance range:
yellow = .10
green = .20
red = .30

2091.68. Flanged guide bush with ball cage retainer

d_1	19 20	24 25	30 32	38 40	48 50	60 63	80
d_2	25 26	30 31	38 40	46 48	56 58	68 71	92
d_3	32	40	48	58	70	85	105
d_4	50	63	72	85	104	120	148
d_5	40	50	58	70	86	100	125
d_6	4.5	5.5	5.5	6.6	9	9	11
d_7	8	10	10	11	15	15	18
t_1	4.6	5.7	5.7	6.8	9	9	11
k	18	23	28	33	38	46	56
l_1	52	62	72	77	102	102	125
l_2	37	37	47	47	60	60	75
l_3	15	25	25	30	42	42	50
l	72	72	80	95	105	120	140

Flanged guide bush with ball cage retainer		=	2091.68.
Guide diameter d_1	38 mm	=	038.
Cage advance VL	5 mm	=	005.
Classification TOL	yellow mm	=	10
Order No		=	2091.68. 038. 005. 10

FIBRO

Roller cage with circlip groove, Brass



2061.82.

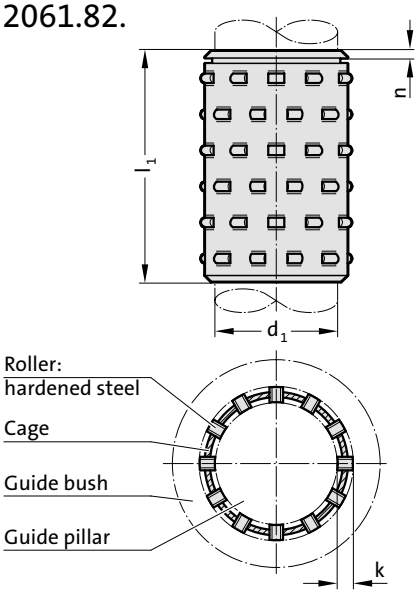

Description:

Roller cages make linear contact with the guide bush and the guide pillar. This results in a load carrying capacity for each individual roller which is many times that of a ball of the same diameter. Roller bearings feature a FIBRO specific seal, similar to the ball bearings. The profile rollers are arranged in a spiral layout axially, so that every roller has its own path. The cages are grooved to accept a DIN 471 circlip.

Material:

Roller Cage: Brass
Rollers: Steel hardened, 100 Cr6, DIN 5402

Note:

Preloading see at the beginning of Chapter D
For roller cages use only pairing class guide pillar red = .30 and guide sleeve yellow = .10.

2061.82. Roller cage with circlip groove, Brass

d_1	19	20	24 25	30 32	38 40	48 50	63
k	3	3	3	4	4	4	4
n	1.6	1.6	1.6	2.1	2.1	2.1	2.1
l_1	Total number of rollers						
45	32	32	40	48			
55	40	40	50	60	70		
65	48	48	60	72	84	108	
75	56	56	70	84	98	126	154
85	64	64	80	96	112	144	176
95	72	72	90	108	126	162	198
105	80	80	100	120	140	180	220
115			110	132	154	198	242
125			120	144	168	216	264
135				156	182	234	286
145				168	196	252	308
155				180	210	270	330
165				192	224	288	352
175					238	306	374
185					252	324	396
205					280	360	440

Ordering Code (example):

Roller cage with circlip groove, Brass		=2061.82.	
Guide diameter d_1	38 mm	=	038.
Length l_1	115 mm	=	115
Order No		=2061.82.038.115	

subject to alterations

Circlip DIN 471

206.72.

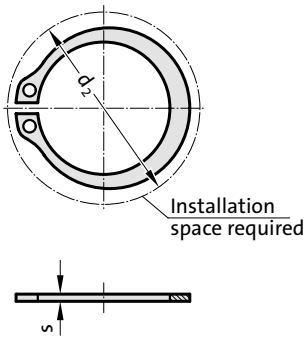

Mounting example

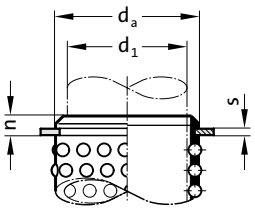



206.72. Circlip DIN 471

d_1	d_a x s	d_2	d_1	d_a x s	d_2
10	13 x 1	20.2	30	37 x 1.5	49
11	14 x 1	21.4	32	38 x 1.75	51.4
12	15 x 1	22.6	38	45 x 1.75	59.1
15	20 x 1.2	28.4	40	47 x 1.75	60.8
16	21 x 1.2	29.6	48	55 x 2	70.2
18	23 x 1.2	32.2	50	57 x 2	72.6
19	24 x 1.2	33.2	60	67 x 2.5	83.1
20	25 x 1.2	34.2	63	70 x 2.5	87
24	29 x 1.5	39.1	80	90 x 3	108.5
25	30 x 1.5	40.5			

Description:

For securing the ball and roller cages

Execution:

to DIN 471

Ordering Code (example):

Circlip DIN 471		=206.72.	
Guide diameter d_1	25 mm	=	025
Order No		=206.72.	025

Roller cage with assembly aid, Brass



2061.84.

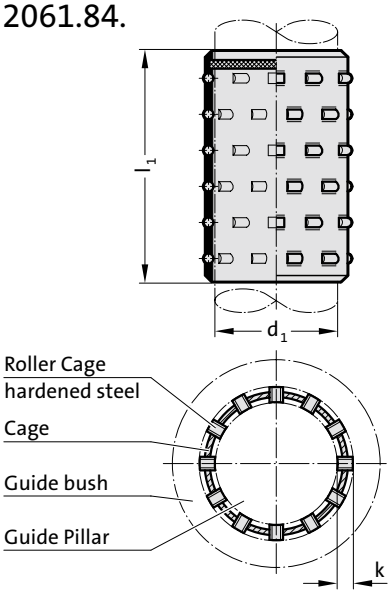

Description:

Roller cages make linear contact with the guide bush and the guide pillar. This results in a load carrying capacity for each individual roller which is many times that of a ball of the same diameter. Roller bearings feature a FIBRO specific seal, similar to the ball bearings. The profile rollers are arranged in a spiral layout axially, so that every roller has its own path.

Material:

Roller Cage: Brass
Rollers: Steel hardened, 100 Cr6, DIN 5402

Note:

No assistant is needed for their assembly. These cages are equipped with a suitably positioned brake ring insert. That ensures equal cage spacing especially on die sets with multiple pillars.
Preloading see at the beginning of Chapter D
For roller cages use only pairing class guide pillar red = .30 and guide sleeve yellow = .10.

2061.84. Roller cage with assembly aid, Brass

d_1	19	20	24 25	30 32	38 40	48 50	63
k	3	3	3	4	4	4	4
l_1	Total number of rollers						
45	32	32	40	48			
55	40	40	50	60	70		
65	48	48	60	72	84	108	
75	56	56	70	84	98	126	154
85	64	64	80	96	112	144	176
95	72	72	90	108	126	162	198
105	80	80	100	120	140	180	220
115			110	132	154	198	242
125			120	144	168	216	264
135				156	182	234	286
145				168	196	252	308
155				180	210	270	330
165				192	224	288	352
175					238	306	374
185					252	324	396
205					280	360	440

Ordering Code (example):

Roller cage with assembly aid, Brass		=2061.84.
Guide diameter d_1	38 mm	= 038.
Length l_1	115 mm	= 115
Order No		=2061.84.038.115

subject to alterations

Headed guide bush, bronze coated, ISO 9448-6

2081.81.

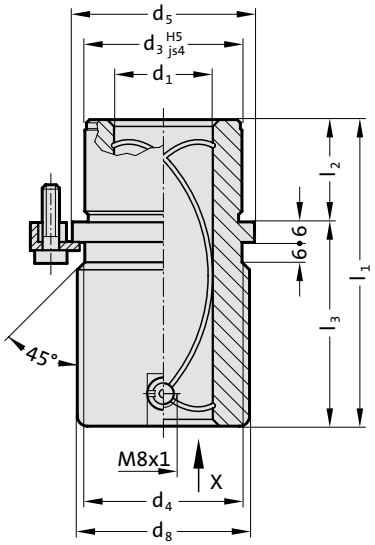

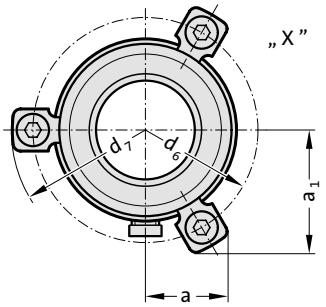

Mounting example

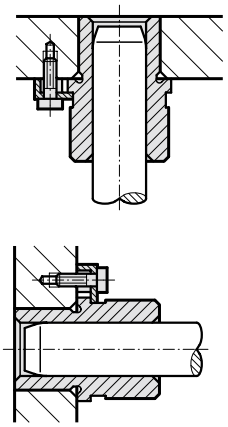



Material:

1.0503
Ø d_3 and d_8 induction hardened to 500+100 HV 10.

Execution:

Bronze coated internal bore.
Diameter d_3 and collar face precision ground.

Note:

The attachment is with 3 Screw clamp, from Ø d_1 = 38 with 4 Screw clamp , which are included in delivery (Order No: 207.45 - Screw clamp incl. socket cap screw DIN 6912, Head Ø 13).
Notes on sliding type guides at the beginning of chapter D.
Matching guide combinations, see selection matrix at the beginning of chapter D.
Assembly guide lines / Dimensional requirements and tolerances at the end of chapter D.

2081.81. Headed guide bush, bronze coated, ISO 9448-6

d_1	19 20	24 25	30 32	38 40	48 50	60 63	80
Tolerance	+0.003/+0.012	+0.003/+0.012	+0.004/+0.015	+0.004/+0.015	+0.004/+0.015	+0.005/+0.018	+0.005/+0.018
d_3	32	40	48	58	70	85	105
d_4	32	40	48	58	70	85	105
d_5	40	48	56	66	80	95	118
d_6	52	60	67	77	91	106	129
d_7	64.7	72.7	79.7	89.7	103.7	118.7	141
d_8	39	46	53	63	77	92	115
a	20.9	22.7	24.4	35.3	40.2	45.5	54.5
a_1	30.3	33.4	36.4	35.3	40.2	45.5	54.5
l_1	59	79	93	108	127	150	150
l_2	23	23	30	37	47	60	60
l_3	36	56	63	71	80	90	90

Ordering Code (example):

Headed guide bush, bronze coated, ISO 9448-6		=2081.81.
Guide diameter d_1	38 mm=	038
Order No		=2081.81.038

Headed guide bush, bronze coated, ISO 9448-6



Mounting example 2081.84.

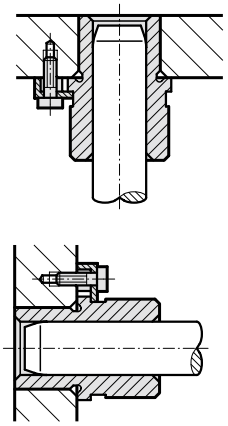

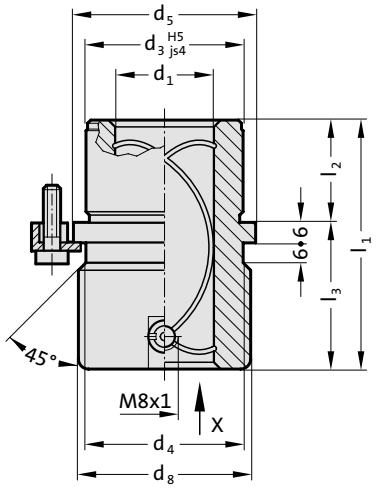

Material:

1.0503
Ø d_3 and d_8 induction hardened to 500+100 HV 10.

Execution:

Bronze coated internal bore.
Diameter d_3 and collar face precision ground.

Note:

The attachment is with 3 Screw clamp, from Ø d_1 = 38 with 4 Screw clamp , which are included in delivery (Order No: 207.45 - Screw clamp incl. socket cap screw DIN 6912, Head Ø 13).
Notes on sliding type guides at the beginning of chapter D.
Matching guide combinations, see selection matrix at the beginning of chapter D.
Assembly guide lines / Dimensional requirements and tolerances at the end of chapter D.

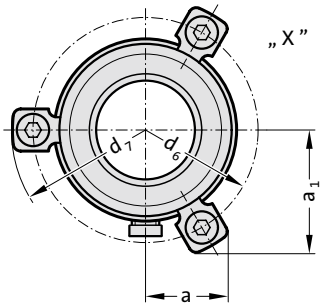

2081.84. Headed guide bush, bronze coated, ISO 9448-6

d_1	19 20	24 25	30 32	38 40	48 50	60 63	80
Tolerance	+0.003/+0.012	+0.003/+0.012	+0.004/+0.015	+0.004/+0.015	+0.004/+0.015	+0.005/+0.018	+0.005/+0.018
d_3	32	40	48	58	70	85	105
d_4	32	40	48	58	70	85	105
d_5	40	48	56	66	80	95	118
d_6	52	60	67	77	91	106	129
d_7	65.7	72.7	79.7	89.7	103.7	118.7	141
d_8	39	46	53	63	77	92	115
a	20.9	22.7	24.4	35.3	40.2	45.5	54.5
a_1	30.3	33.4	36.4	35.3	40.2	45.5	54.5
l_1	43	59	75	82	97	116	120
l_2	23	23	30	37	47	60	60
l_3	20	36	45	45	50	56	60

Ordering Code (example):

Headed guide bush, bronze coated, ISO 9448-6		=2081.84.
Guide diameter d_1	38 mm=	038
Order No		=2081.84.038

subject to alterations

Headed guide bush, bronze coated, ISO 9448-6

2081.85.

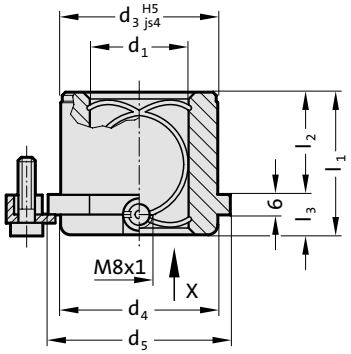

Mounting example

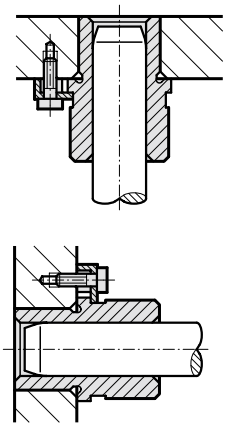



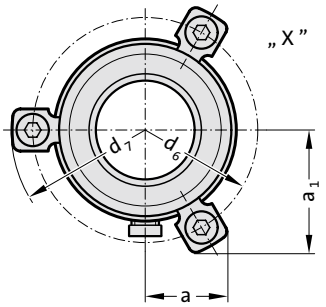

Material:

1.0503
Ø d_3 and d_8 induction hardened to 500+100 HV 10.

Execution:

Bronze coated internal bore.
Diameter d_3 and collar face precision ground.

Note:

The attachment is with 3 Screw clamp, from Ø d_1 = 38 with 4 Screw clamp , which are included in delivery (Order No: 207.45 - Screw clamp incl. socket cap screw DIN 6912, Head Ø 13).
Notes on sliding type guides at the beginning of chapter D.
Matching guide combinations, see selection matrix at the beginning of chapter D.
Assembly guide lines / Dimensional requirements and tolerances at the end of chapter D.

2081.85. Headed guide bush, bronze coated, ISO 9448-6

d_1	19 20	24 25	30 32	38 40	48 50	60 63	80
Tolerance	+0.003/+0.012	+0.003/+0.012	+0.004/+0.015	+0.004/+0.015	+0.004/+0.015	+0.005/+0.018	+0.005/+0.018
d_3	32	40	48	58	70	85	105
d_4	32	40	48	58	70	85	105
d_5	40	48	56	66	80	95	118
d_6	52	60	67	77	91	106	129
d_7	65.7	72.7	79.7	89.7	103.7	118.7	141
a	20.9	22.7	24.4	35.3	40.2	45.5	54.4
a_1	30.3	33.4	36.4	35.3	40.2	45.5	54.4
l_1	35	35	42	52	65	80	80
l_2	23	23	30	37	47	60	60
l_3	12	12	12	15	18	20	20

Ordering Code (example):

Headed guide bush, bronze coated, ISO 9448-6		=2081.85.
Guide diameter d_1	38 mm=	038
Order No		=2081.85.038

Headed guide bush, sintered ferrite carbonitrided with long-term lubrication, ISO 9448-6



Mounting example

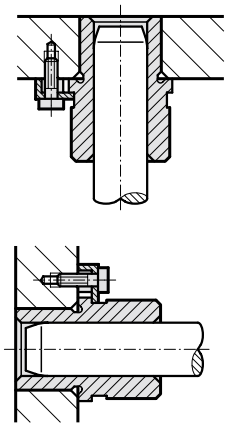

2081.31.

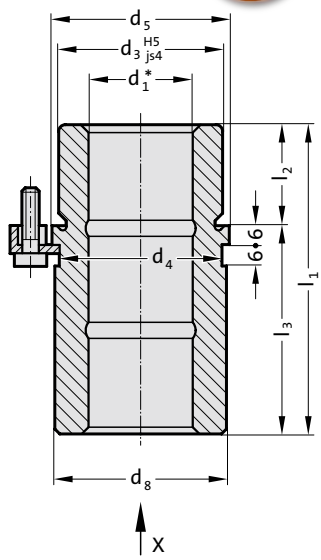

Material:
Sintered ferrite of high purity, carbonitrided, long-term lubrication

Execution:
Bearing surfaces, diameter d_3 and collar face precision ground.

Note:
The attachment is with 3 Screw clamp, from Ø d_1 = 38 with 4 Screw clamp , which are included in delivery (Order No: 207.45 - Screw clamp incl. socket cap screw DIN 6912, Head Ø 13).
Notes on sliding type guides at the beginning of chapter D.
Bearing clearance see pairing classification at the beginning of chapter D.
Matching guide combinations, see selection matrix at the beginning of chapter D.
Assembly guide lines / Dimensional requirements and tolerances at the end of chapter D.

Tolerance range:
yellow = .10
green = .20
red = .30

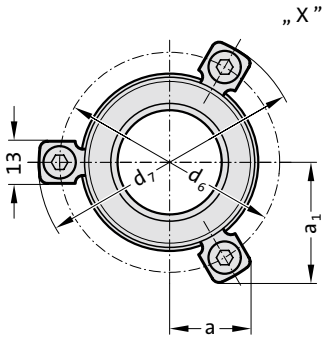

2081.31. Headed guide bush, sintered ferrite carbonitrided with long-term lubrication, ISO 9448-6

d_1	19 20	24 25	30 32	38 40	48 50	60 63
d_3	32	40	48	58	70	85
d_4	32	40	48	58	70	85
d_5	40	48	56	66	80	95
d_6	52	60	67	77	91	106
d_7	64.7	72.7	79.7	89.7	103.7	118.7
d_8	39	46	53	63	77	92
a	20.7	22.65	24.4	35.3	40.2	45.5
a_1	30	33.4	36.4	35.3	40.2	45.5
l_1	59	79	93	108	127	150
l_2	23	23	30	37	47	60
l_3	36	56	63	71	80	90

Ordering Code (example):

Headed guide bush, sintered ferrite carbonitrided with long-term lubrication, ISO 9448-6		=2081.31.
Guide diameter d_1	38 mm=	038.
Classification TOL	yellow=	10
Order No		=2081.31.038.10

subject to alterations

Headed guide bush, sintered ferrite carbonitrided with long-term lubrication, ISO 9448-6

2081.32.

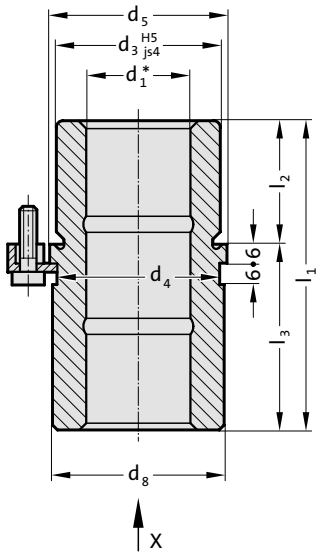

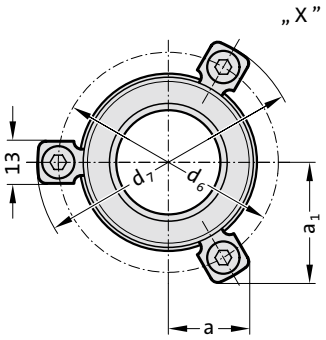

Mounting example

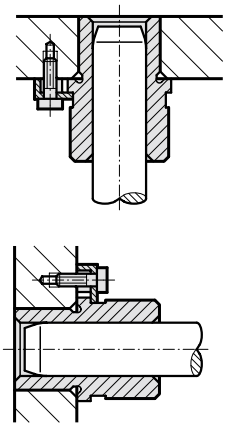



Material:
Sintered ferrite of high purity, carbonitrided, long-term lubrication

Execution:
Bearing surfaces, diameter d_3 and collar face precision ground.

Note:
The attachment is with 3 Screw clamp, from Ø d_1 = 38 with 4 Screw clamp , which are included in delivery (Order No: 207.45 - Screw clamp incl. socket cap screw DIN 6912, Head Ø 13).
Notes on sliding type guides at the beginning of chapter D.
Bearing clearance see pairing classification at the beginning of chapter D.
Matching guide combinations, see selection matrix at the beginning of chapter D.
Assembly guide lines / Dimensional requirements and tolerances at the end of chapter D.

Tolerance range:
yellow = .10
green = .20
red = .30

2081.32. Headed guide bush, sintered ferrite carbonitrided with long-term lubrication, ISO 9448-6

d_1	24 25	30 32	38 40	48 50
d_3	40	48	58	70
d_4	40	48	58	70
d_5	48	56	66	80
d_6	60	67	77	91
d_7	72.7	79.7	89.7	103.7
d_8	46	53	63	77
a	22.65	24.4	35.3	40.2
a_1	33.4	36.4	35.3	40.2
l_1	80	93	110	131
l_2	30	37	47	60
l_3	50	56	63	71

Ordering Code (example):

Headed guide bush, sintered ferrite carbonitrided with long-term lubrication, ISO 9448-6		=2081.32.
Guide diameter d_1	38 mm=	038.
Classification TOL	yellow =	10
Order No		=2081.32. 038.10

FIBRO

Headed guide bush, sintered ferrite carbonitrided with long-term lubrication, ISO 9448-6



Mounting example

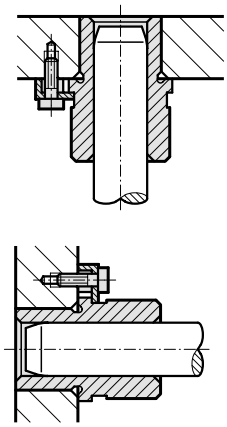

2081.33.

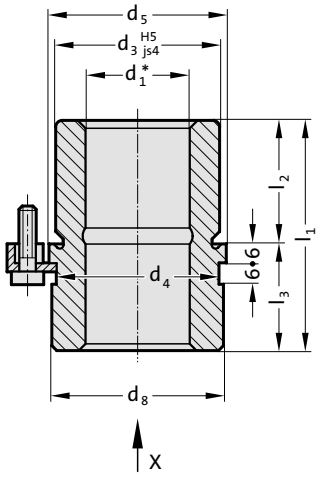

Material:

Sintered ferrite of high purity, carbonitrided, long-term lubrication

Execution:

Bearing surfaces, diameter d_3 and collar face precision ground.

Note:

The attachment is with 3 Screw clamp, from Ø d_1 = 38 with 4 Screw clamp , which are included in delivery (Order No: 207.45 - Screw clamp incl. socket cap screw DIN 6912, Head Ø 13).
Notes on sliding type guides at the beginning of chapter D.
Bearing clearance see pairing classification at the beginning of chapter D.
Matching guide combinations, see selection matrix at the beginning of chapter D.
Assembly guide lines / Dimensional requirements and tolerances at the end of chapter D.

Tolerance range:
yellow = .10
green = .20
red = .30

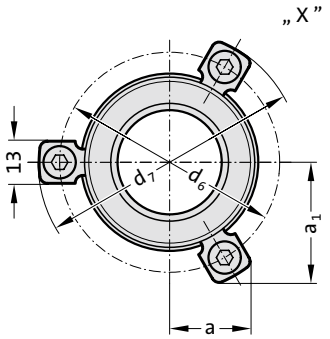

2081.33. Headed guide bush, sintered ferrite carbonitrided with long-term lubrication, ISO 9448-6

d_1	24 25	30 32	38 40	48 50
d_3	40	48	58	70
d_4	40	48	58	70
d_5	48	56	66	80
d_6	60	67	77	91
d_7	72.7	79.7	89.7	103.7
d_8	46	53	63	77
a	22.65	24.4	35.3	40.2
a_1	33.4	36.4	35.3	40.2
l_1	55	69	79	96
l_2	30	37	47	60
l_3	25	32	32	36

Ordering Code (example):

Headed guide bush, sintered ferrite carbonitrided with long-term lubrication, ISO 9448-6		=2081.33.
Guide diameter d_1	38 mm=	038.
Classification TOL	yellow =	10
Order No		=2081.33.038.10

subject to alterations

Headed guide bush, sintered ferrite carbonitrided with long-term lubrication, ISO 9448-6

2081.34.

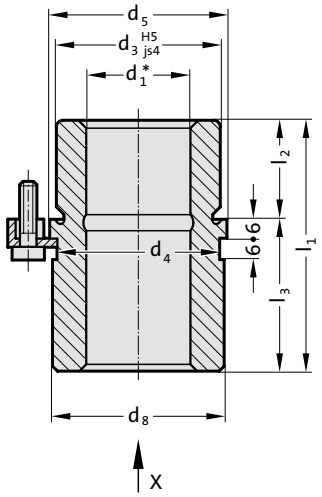

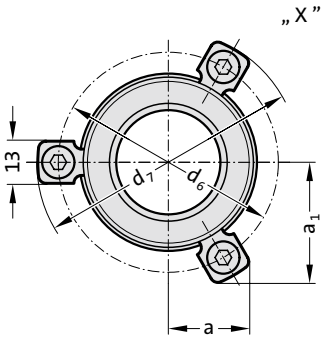

Mounting example

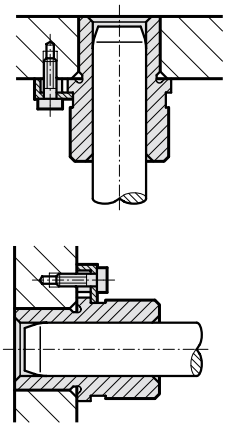



Material:

Sintered ferrite of high purity, carbonitrided, long-term lubrication

Execution:

Bearing surfaces, diameter d_3 and collar face precision ground.

Note:

The attachment is with 3 Screw clamp, from Ø d_1 = 38 with 4 Screw clamp , which are included in delivery (Order No: 207.45 - Screw clamp incl. socket cap screw DIN 6912, Head Ø 13).
Notes on sliding type guides at the beginning of chapter D.
Bearing clearance see pairing classification at the beginning of chapter D.
Matching guide combinations, see selection matrix at the beginning of chapter D.
Assembly guide lines / Dimensional requirements and tolerances at the end of chapter D.

Tolerance range:
yellow = .10
green = .20
red = .30

2081.34. Headed guide bush, sintered ferrite carbonitrided with long-term lubrication, ISO 9448-6

d_1	19 20	24 25	30 32	38 40	48 50	60 63
d_3	32	40	48	58	70	85
d_4	32	40	48	58	70	85
d_5	40	48	56	66	80	95
d_6	52	60	67	77	91	106
d_7	64.7	72.7	79.7	89.7	103.7	118.7
d_8	39	46	53	63	77	92
a	20.7	22.65	24.4	35.3	40.2	45.5
a_1	30	33.4	36.4	35.3	40.2	45.5
l_1	43	59	75	82	97	116
l_2	23	23	30	37	47	60
l_3	20	36	45	45	50	56

Ordering Code (example):

Headed guide bush, sintered ferrite carbonitrided with long-term lubrication, ISO 9448-6		=2081.34.
Guide diameter d_1	38 mm=	038.
Classification TOL	yellow =	10
Order No		=2081.34.038.10

Headed guide bush, sintered ferrite carbonitrided with long-term lubrication, ISO 9448-6



Mounting example

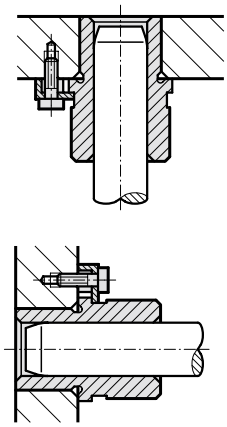

2081.35.

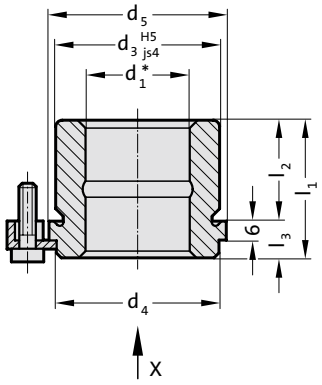

Material:
Sintered ferrite of high purity, carbonitrided, long-term lubrication

Execution:
Bearing surfaces, diameter d_3 and collar face precision ground.

Note:
The attachment is with 3 Screw clamp, from Ø d_1 = 38 with 4 Screw clamp , which are included in delivery (Order No: 207.45 - Screw clamp incl. socket cap screw DIN 6912, Head Ø 13).
Notes on sliding type guides at the beginning of chapter D.
Bearing clearance see pairing classification at the beginning of chapter D.
Matching guide combinations, see selection matrix at the beginning of chapter D.
Assembly guide lines / Dimensional requirements and tolerances at the end of chapter D.

Tolerance range:
yellow = .10
green = .20
red = .30

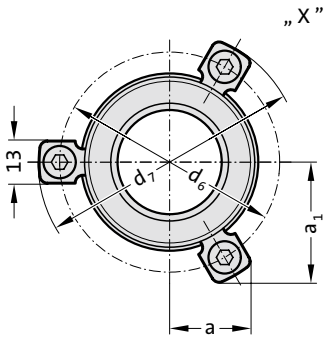

2081.35. Headed guide bush, sintered ferrite carbonitrided with long-term lubrication, ISO 9448-6

d_1	19 20	24 25	30 32	38 40	48 50	60 63
d_3	32	40	48	58	70	85
d_4	32	40	48	58	70	85
d_5	40	48	56	66	80	95
d_6	52	60	67	77	91	106
d_7	64.7	72.7	79.7	89.7	103.7	118.7
a	20.7	22.65	24.4	35.3	40.2	45.5
a_1	30	33.4	36.4	35.3	40.2	45.5
l_1	35	35	42	52	65	80
l_2	23	23	30	37	47	60
l_3	12	12	12	15	18	20

Ordering Code (example):

Headed guide bush, sintered ferrite carbonitrided with long-term lubrication, ISO 9448-6		=2081.35.
Guide diameter d_1	38 mm=	038.
Classification TOL	yellow =	10
Order No		=2081.35.038.10

subject to alterations

Headed guide bush "ECO-LINE", bronzeplated, ISO 9448-6

2081.91.

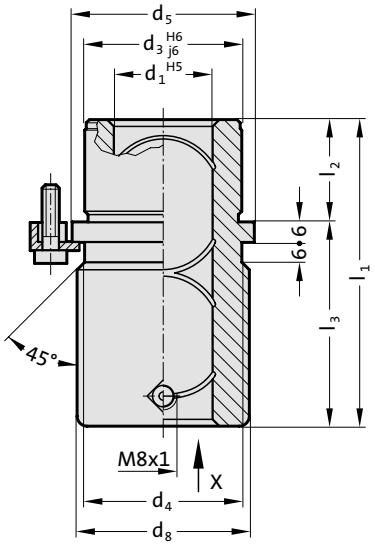

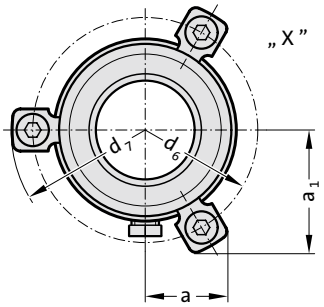

Mounting example

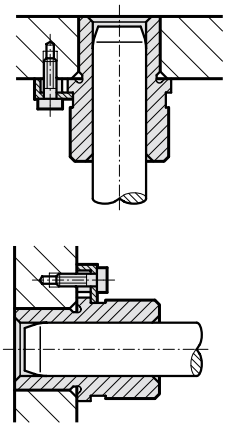



Material:

Steel, d_3 induction hardened

Execution:

Bronze plated internal bore.
Diameter d_3 and collar face precision ground.

Note:

The attachment is with 3 Screw clamp, from Ø d_1 = 38 with 4 Screw clamp , which are included in delivery (Order No: 207.45 - Screw clamp incl. socket cap screw DIN 6912, Head Ø 13).
Matching guide combinations, see selection matrix at the beginning of chapter D.
Assembly guide lines / Dimensional requirements and tolerances at the end of chapter D.

2081.91. Headed guide bush "ECO-LINE", bronzeplated, ISO 9448-6

d_1	19 20	24 25	30 32	38 40	48 50	60 63	80
d_3	32	40	48	58	70	85	105
d_4	32	40	48	58	70	85	105
d_5	40	48	56	66	80	95	118
d_6	52	60	67	77	91	106	129
d_7	64.7	72.7	79.7	89.7	103.7	118.7	141
d_8	39	46	53	63	77	92	115
a	20.7	22.7	24.4	35.3	40.2	45.5	54.5
a_1	30.3	33.4	36.4	35.3	40.2	45.5	54.5
l_1	59	79	93	108	127	150	150
l_2	23	23	30	37	47	60	60
l_3	36	56	63	71	80	90	90

Ordering Code (example):

Headed guide bush "ECO-LINE", bronzeplated, ISO 9448-6		=2081.91.
Guide diameter d_1	38 mm=	038
Order No		=2081.91.038

Headed guide bush "ECO-LINE", bronzeplated, ISO 9448-6



Mounting example

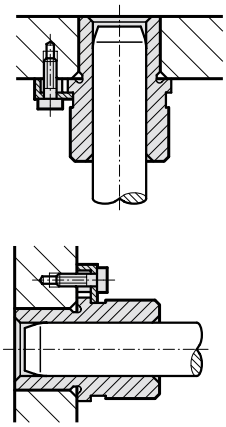

2081.94.

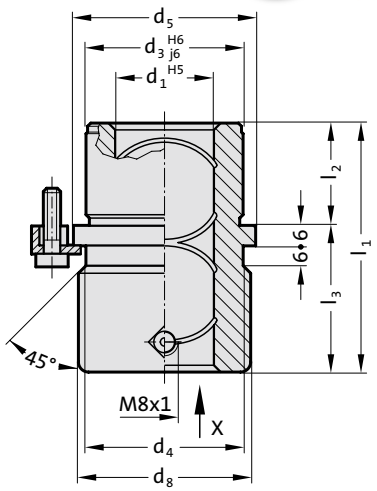

Material:

Steel, d_3 induction hardened

Execution:

Bronze plated internal bore.
Diameter d_3 and collar face precision ground.

Note:

The attachment is with 3 Screw clamp, from Ø d_1 = 38 with 4 Screw clamp , which are included in delivery (Order No: 207.45 - Screw clamp incl. socket cap screw DIN 6912, Head Ø 13).
Matching guide combinations, see selection matrix at the beginning of chapter D.
Assembly guide lines / Dimensional requirements and tolerances at the end of chapter D.

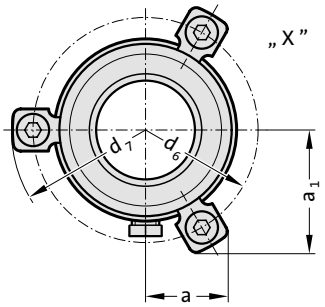

2081.94. Headed guide bush "ECO-LINE", bronzeplated, ISO 9448-6

d_1	19 20	24 25	30 32	38 40	48 50	60 63	80
d_3	32	40	48	58	70	85	105
d_4	32	40	48	58	70	85	105
d_5	40	48	56	66	80	95	118
d_6	52	60	67	77	91	106	129
d_7	64.7	72.7	79.7	89.7	103.7	118.7	141
d_8	39	46	53	63	77	92	115
a	20.7	22.7	24.4	35.3	40.2	45.5	54.5
a_1	30.3	33.4	36.4	35.3	40.2	45.5	54.5
l_1	43	59	75	82	97	116	120
l_2	23	23	30	37	47	60	60
l_3	20	36	45	45	50	56	60

Ordering Code (example):

Headed guide bush "ECO-LINE", bronzeplated, ISO 9448-6		=2081.94.
Guide diameter d_1	38 mm=	038
Order No		=2081.94.038

subject to alterations

Headed guide bush "ECO-LINE", bronzeplated, ISO 9448-6

2081.95.

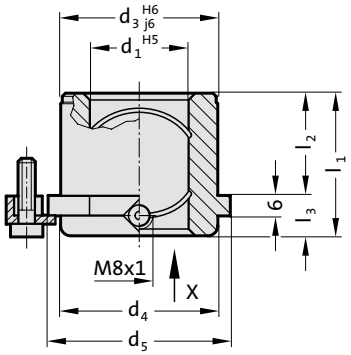

Mounting example

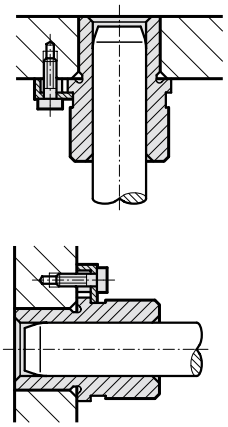



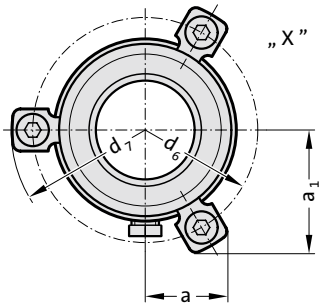

Material:

Steel, d_3 induction hardened

Execution:

Bronze plated internal bore.
Diameter d_3 and collar face precision ground.

Note:

The attachment is with 3 Screw clamp, from Ø d_1 = 38 with 4 Screw clamp , which are included in delivery (Order No: 207.45 - Screw clamp incl. socket cap screw DIN 6912, Head Ø 13).
Matching guide combinations, see selection matrix at the beginning of chapter D.
Assembly guide lines / Dimensional requirements and tolerances at the end of chapter D.

2081.95. Headed guide bush "ECO-LINE", bronzeplated, ISO 9448-6

d_1	19 20	24 25	30 32	38 40	48 50	60 63	80
d_3	32	40	48	58	70	85	105
d_4	32	40	48	58	70	85	105
d_5	40	48	56	66	80	95	118
d_6	52	60	67	77	91	106	129
d_7	64.7	72.7	79.7	89.7	103.7	118.7	141
a	20.7	22.65	24.4	35.3	40.2	45.5	54.4
a_1	30	33.4	36.4	35.3	40.2	45.5	54.4
l_1	35	35	42	52	65	80	80
l_2	23	23	30	37	47	60	60
l_3	12	12	12	15	18	20	20

Ordering Code (example):

Headed guide bush "ECO-LINE", bronzeplated, ISO 9448-6		=2081.95.
Guide diameter d_1	38 mm=	038
Order No		=2081.95.038

FIBRO

Headed guide bush "ECO-LINE", Bronze with solid lubricant rings, ISO 9448-6



Mounting example

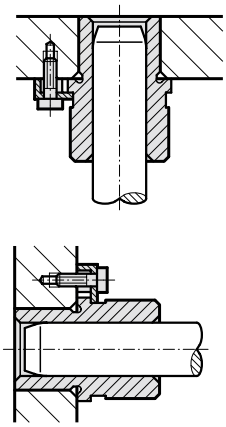

2081.71.

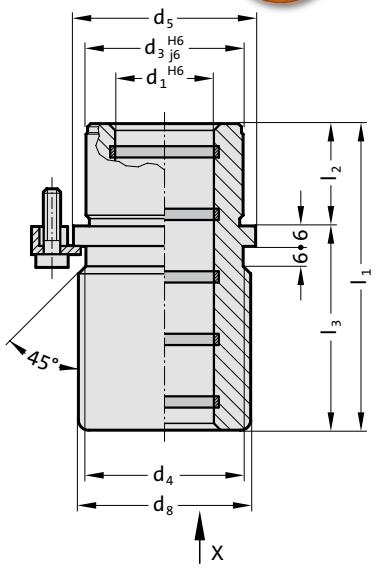

Material:

Bronze with solid lubricant, oilless lubricating

Execution:

Note:

The attachment is with 3 Screw clamp, from Ø d_1 = 38 with 4 Screw clamp , which are included in delivery (Order No: 207.45 - Screw clamp incl. socket cap screw DIN 6912, Head Ø 13).
Notes on sliding type guides at the beginning of chapter D.
Matching guide combinations, see selection matrix at the beginning of chapter D.
Assembly guide lines / Dimensional requirements and tolerances at the end of chapter D.

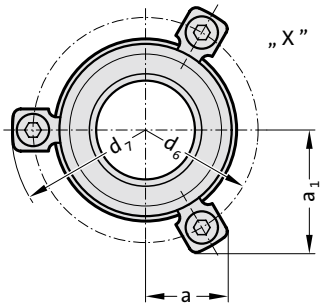

2081.71. Headed guide bush "ECO-LINE", Bronze with solid lubricant rings, ISO 9448-6

d_1	19 20	24 25	30 32	38 40	48 50	60 63	80
d_3	32	40	48	58	70	85	105
d_4	32	40	48	58	70	85	105
d_5	40	48	56	66	80	95	118
d_6	52	60	67	77	91	106	129
d_7	64.7	72.7	79.7	89.7	103.7	118.7	141
d_8	39	46	53	63	77	92	115
a	20.7	22.65	24.4	35.3	40.2	45.5	54.5
a_1	30	33.4	36.4	35.3	40.2	45.5	54.5
l_1	59	79	93	108	127	150	150
l_2	23	23	30	37	47	60	60
l_3	36	56	63	71	80	90	90

Ordering Code (example):

Headed guide bush "ECO-LINE", Bronze with solid lubricant rings, ISO 9448-6		=2081.71.
Guide diameter d_1	38 mm=	038
Order No		=2081.71.038

subject to alterations

Headed guide bush "ECO-LINE", Bronze with solid lubricant rings, ISO 9448-6

2081.74.

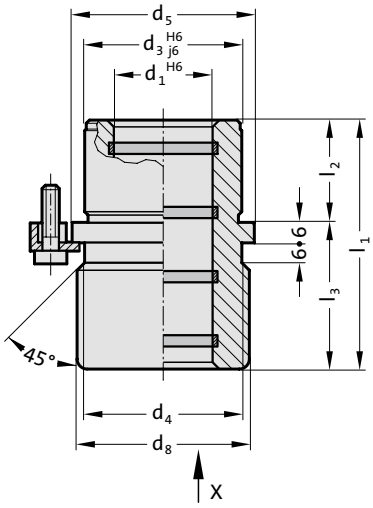

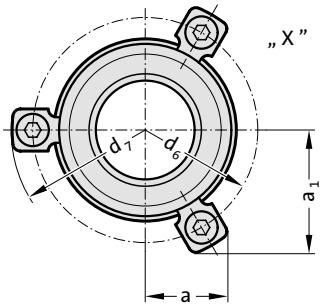

Mounting example

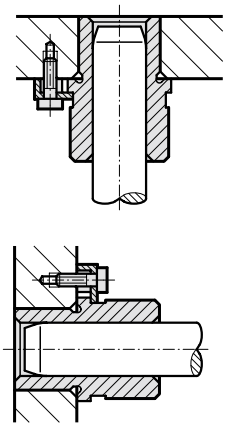



Material:

Bronze with solid lubricant, oilless lubricating

Execution:

Note:

The attachment is with 3 Screw clamp, from Ø d_1 = 38 with 4 Screw clamp , which are included in delivery (Order No: 207.45 - Screw clamp incl. socket cap screw DIN 6912, Head Ø 13).
Notes on sliding type guides at the beginning of chapter D.
Matching guide combinations, see selection matrix at the beginning of chapter D.
Assembly guide lines / Dimensional requirements and tolerances at the end of chapter D.

2081.74. Headed guide bush "ECO-LINE", Bronze with solid lubricant rings, ISO 9448-6

d_1	19 20	24 25	30 32	38 40	48 50	60 63	80
d_3	32	40	48	58	70	85	105
d_4	32	40	48	58	70	85	105
d_5	40	48	56	66	80	95	118
d_6	52	60	67	77	91	106	129
d_7	64.7	72.7	79.7	89.7	103.7	118.7	141
d_8	39	46	53	63	77	92	115
a	20.7	22.65	24.4	35.3	40.2	45.5	54.5
a_1	30	33.4	36.4	35.3	40.2	45.5	54.5
l_1	43	59	75	82	97	116	120
l_2	23	23	30	37	47	60	60
l_3	20	36	45	45	50	56	60

Ordering Code (example):

Headed guide bush "ECO-LINE", Bronze with solid lubricant rings, ISO 9448-6	=2081.74.	
Guide diameter d_1	38 mm=	038
Order No	=2081.74.038	

Headed guide bush "ECO-LINE", Bronze with solid lubricant rings, ISO 9448-6

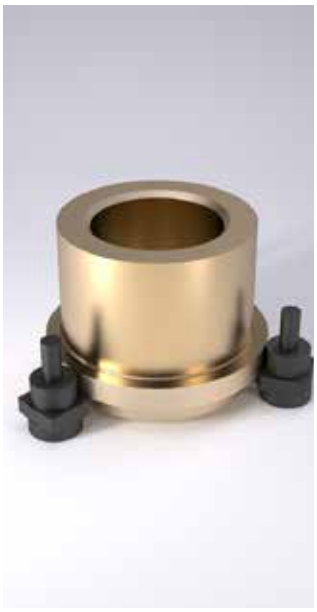

Mounting example

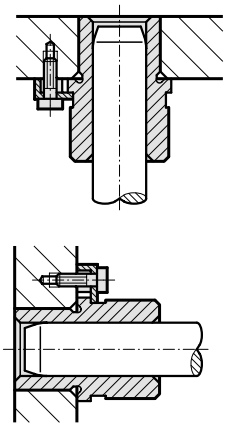

2081.75.

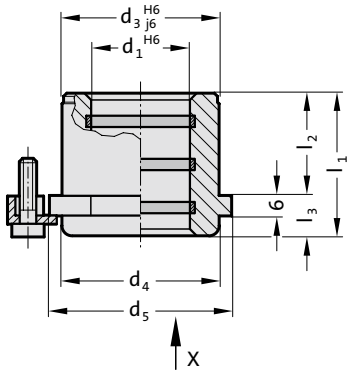

Material:

Bronze with solid lubricant, oilless lubricating

Execution:

Note:

The attachment is with 3 Screw clamp, from ∅ d_1 = 38 with 4 Screw clamp , which are included in delivery (Order No: 207.45 - Screw clamp incl. socket cap screw DIN 6912, Head ∅ 13).
Notes on sliding type guides at the beginning of chapter D.
Matching guide combinations, see selection matrix at the beginning of chapter D.
Assembly guide lines / Dimensional requirements and tolerances at the end of chapter D.

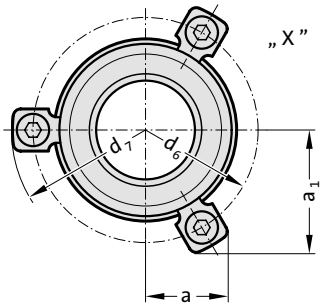

2081.75. Headed guide bush "ECO-LINE", Bronze with solid lubricant rings, ISO 9448-6

d_1	19 20	24 25	30 32	38 40	48 50	60 63	80
d_3	32	40	48	58	70	85	105
d_4	32	40	48	58	70	85	105
d_5	40	48	56	66	80	95	118
d_6	52	60	67	77	91	106	129
d_7	64.7	72.7	79.7	89.7	103.7	118.7	141
a	20.7	22.65	24.4	35.3	40.2	45.5	54.4
a_1	30	33.4	36.4	35.3	40.2	45.5	54.4
l_1	35	35	42	52	65	80	80
l_2	23	23	30	37	47	60	60
l_3	12	12	12	15	18	20	20

Ordering Code (example):

Headed guide bush "ECO-LINE", Bronze with solid lubricant rings, ISO 9448-6		=2081.75.
Guide diameter d_1	38 mm=	038
Order No		=2081.75.038

subject to alterations

Headed guide bush for ball bearing, ISO 9448-7

2081.44.

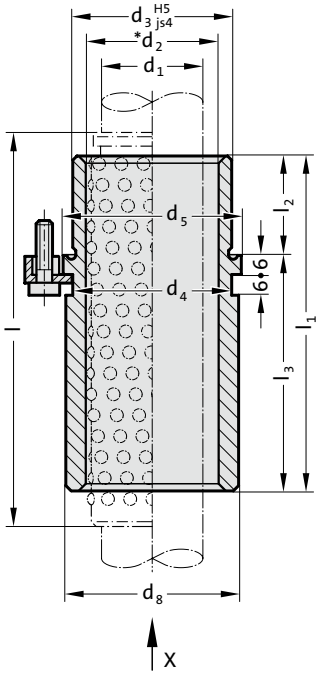

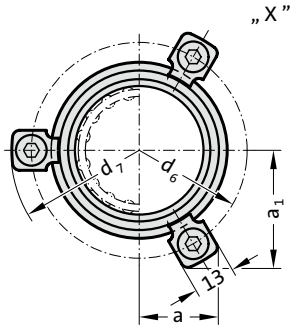

Mounting example

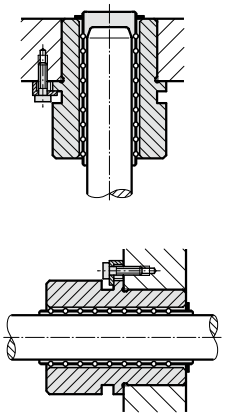



Material:

Tool steel, hardened 62 ± 2 HRC

Execution:

Bearing surfaces honed,
outside diameter precision ground.

Note:

The attachment is with 3 Screw clamp, from Ø d_1 = 38 with 4 Screw clamp , which are included in delivery (Order No: 207.45 - Screw clamp incl. socket cap screw DIN 6912, Head Ø 13).
Notes on ball bearing type guides at the beginning of chapter D.
*Preloading see pairing classification at the beginning of chapter D
Matching guide combinations, see selection matrix at the beginning of chapter D.
Ball guide capacity calculations at the end of chapter D.
Assembly guide lines / Dimensional requirements and tolerances at the end of chapter D.
Tolerance range:
yellow = .10
green = .20
red = .30

2081.44. Headed guide bush for ball bearing, ISO 9448-7

d_1	19 20	24 25	30 32	38 40	48 50	60 63	80
d_2	25 26	30 31	38 40	46 48	56 58	68 71	92
d_3	32	40	48	58	70	85	105
d_4	32	40	48	58	70	85	105
d_5	40	48	56	66	80	95	118
d_6	52	60	67	77	91	106	129
d_7	64.7	72.7	79.7	89.7	103.7	118.7	141.7
d_8	39	46	53	63	77	92	115
a	20.7	22.65	24.4	35.3	40.2	45.5	54.5
a_1	30	33.4	36.4	35.3	40.2	45.5	54.5
l_1	59	79	93	108	127	150	150
l_2	23	23	30	37	47	60	60
l_3	36	56	63	71	80	90	90
l*	71	95	120	120	140	160	160

*l = Nominal ordering length of ball cage - prefered length

Ordering Code (example):

Headed guide bush for ball bearing, ISO 9448-7		=2081.44.
Guide diameter d_1	38 mm =	038.
Classification TOL	yellow =	10
Order No		=2081.44. 038. 10

FIBRO

Headed guide bush for ball bearing, ISO 9448-7



Mounting example

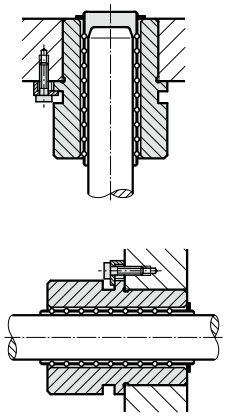

2081.45.

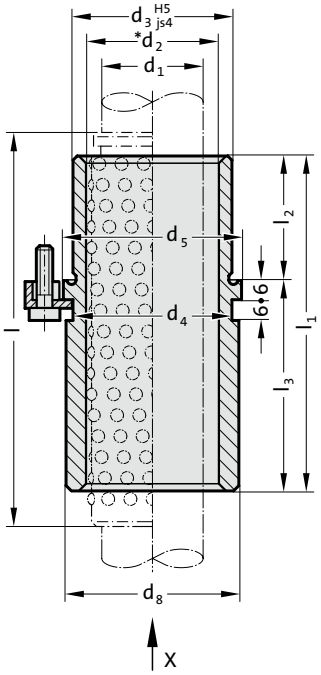

Material:

Tool steel, hardened 62 ± 2 HRC

Execution:

Bearing surfaces honed,
outside diameter precision ground.

Note:

The attachment is with 3 Screw clamp, from Ø d_1 = 38 with 4 Screw clamp , which are included in delivery (Order No: 207.45 - Screw clamp incl. socket cap screw DIN 6912, Head Ø 13).
Notes on ball bearing type guides at the beginning of chapter D.
*Preloading see pairing classification at the beginning of chapter D
Matching guide combinations, see selection matrix at the beginning of chapter D.
Ball guide capacity calculations at the end of chapter D.
Assembly guide lines / Dimensional requirements and tolerances at the end of chapter D.
Tolerance range:
yellow = .10
green = .20
red = .30

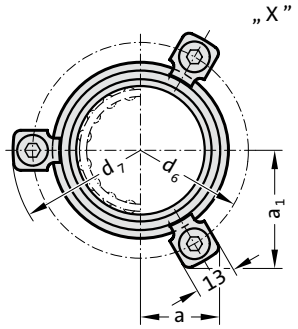

2081.45. Headed guide bush for ball bearing, ISO 9448-7

d_1	24 25	30 32	38 40	48 50
d_2	30 31	38 40	46 48	56 58
d_3	40	48	58	70
d_4	40	48	58	70
d_5	48	56	66	80
d_6	60	67	77	91
d_7	72.7	79.7	89.7	103.7
d_8	46	53	63	77
a	22.65	24.4	35.3	40.2
a_1	33.4	36.4	35.3	40.2
l_1	80	93	110	131
l_2	30	37	47	60
l_3	50	56	63	71
l*	95	120	140	160

*l = Nominal ordering length of ball cage - prefered length

Ordering Code (example):

Headed guide bush for ball bearing, ISO 9448-7		=	2081.45.
Guide diameter d_1	38 mm	=	038.
Classification TOL	yellow	=	10
Order No		=	2081.45. 038. 10

Headed guide bush for ball bearing, ISO 9448-7

2081.46.

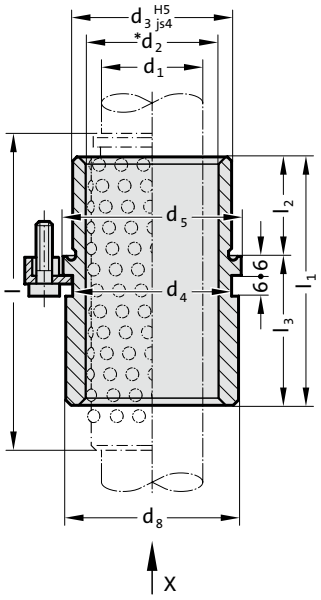

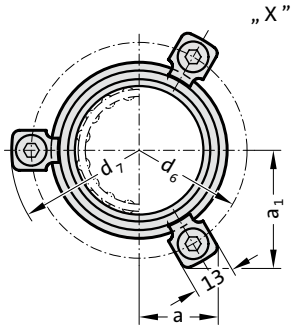

Mounting example

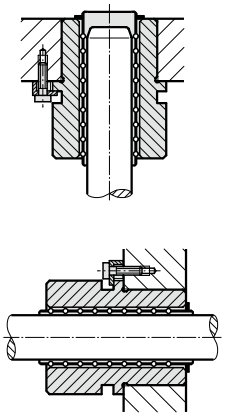



Material:

Tool steel, hardened 62 ± 2 HRC

Execution:

Bearing surfaces honed,
outside diameter precision ground.

Note:

The attachment is with 3 Screw clamp, from Ø d_1 = 38 with 4 Screw clamp , which are included in delivery (Order No: 207.45 - Screw clamp incl. socket cap screw DIN 6912, Head Ø 13).
Notes on ball bearing type guides at the beginning of chapter D.
*Preloading see pairing classification at the beginning of chapter D
Matching guide combinations, see selection matrix at the beginning of chapter D.
Ball guide capacity calculations at the end of chapter D.
Assembly guide lines / Dimensional requirements and tolerances at the end of chapter D.
Tolerance range:
yellow = .10
green = .20
red = .30

2081.46. Headed guide bush for ball bearing, ISO 9448-7

d_1	19 20	24 25	30 32	38 40	48 50	60 63	80
d_2	25 26	30 31	38 40	46 48	56 58	68 71	92
d_3	32	40	48	58	70	85	105
d_4	32	40	48	58	70	85	105
d_5	40	48	56	66	80	95	118
d_6	52	60	67	77	91	106	129
d_7	64.7	72.7	79.7	89.7	103.7	118.7	141.7
d_8	39	46	53	63	77	92	115
a	20.7	22.65	24.4	35.3	40.2	45.5	54.5
a_1	30	33.4	36.4	35.3	40.2	45.5	54.5
l_1	43	59	75	82	97	116	120
l_2	23	23	30	37	47	60	60
l_3	20	36	45	45	50	56	60
l*	56	71	95	105	120	140	140

*l = Nominal ordering length of ball cage - prefered length

Ordering Code (example):

Headed guide bush for ball bearing, ISO 9448-7		=2081.46.
Guide diameter d_1	38 mm =	038.
Classification TOL	yellow =	10
Order No		=2081.46. 038. 10

FIBRO

Headed guide bush for ball bearing, ISO 9448-7



Mounting example 2081.47.

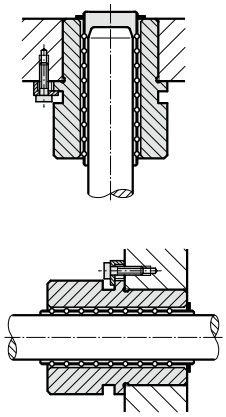

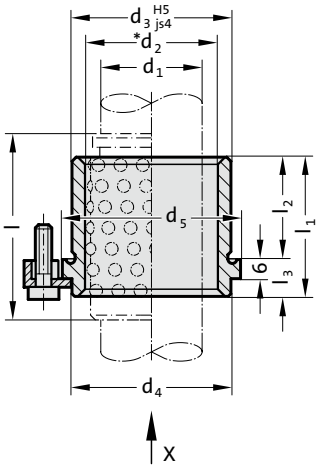

Material:

Tool steel, hardened 62 ± 2 HRC

Execution:

Bearing surfaces honed,
outside diameter precision ground.

Note:

The attachment is with 3 Screw clamp, from Ø d_1 = 38 with 4 Screw clamp , which are included in delivery (Order No: 207.45 - Screw clamp incl. socket cap screw DIN 6912, Head Ø 13).
Notes on ball bearing type guides at the beginning of chapter D.
*Preloading see pairing classification at the beginning of chapter D
Matching guide combinations, see selection matrix at the beginning of chapter D.
Ball guide capacity calculations at the end of chapter D.
Assembly guide lines / Dimensional requirements and tolerances at the end of chapter D.
Tolerance range:
yellow = .10
green = .20
red = .30

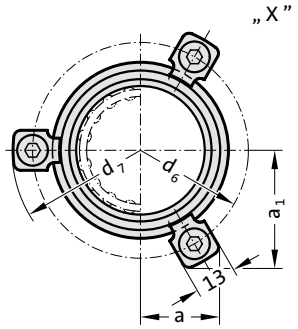

2081.47. Headed guide bush for ball bearing, ISO 9448-7

d_1	19 20	24 25	30 32	38 40	48 50	60 63	80
d_2	25 26	30 31	38 40	46 48	56 58	68 71	92
d_3	32	40	48	58	70	85	105
d_4	32	40	48	58	70	85	105
d_5	40	48	56	66	80	95	118
d_6	52	60	67	77	91	106	129
d_7	64.7	72.7	79.7	89.7	103.7	118.7	141.7
a	20.7	22.65	24.4	35.3	40.2	45.5	54.5
a_1	30	33.4	36.4	35.3	40.2	45.5	54.5
l_1	35	35	42	52	65	80	80
l_2	23	23	30	37	47	60	60
l_3	12	12	12	15	18	20	20
l*	45	45	56	63	80	95	120

*l = Nominal ordering length of ball cage - prefered length

Ordering Code (example):

Headed guide bush for ball bearing, ISO 9448-7		=	2081.47.
Guide diameter d_1	38 mm	=	038.
Classification TOL	yellow	=	10
Order No		=	2081.47. 038. 10

subject to alterations

Headed guide bush for ball bearing, ISO 9448-7

2081.49.

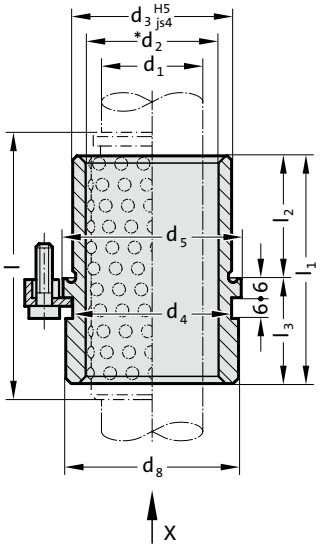

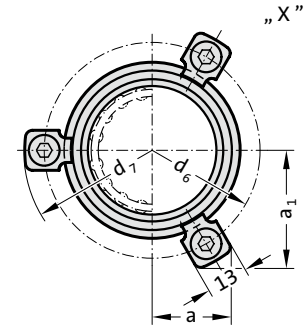

Mounting example

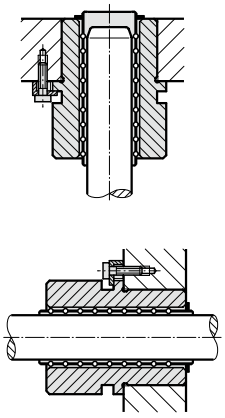



Material:

Tool steel, hardened 62 ± 2 HRC

Execution:

Bearing surfaces honed,
outside diameter precision ground.

Note:

The attachment is with 3 Screw clamp, from Ø d_1 = 38 with 4 Screw clamp , which are included in delivery (Order No: 207.45 - Screw clamp incl. socket cap screw DIN 6912, Head Ø 13).
Notes on ball bearing type guides at the beginning of chapter D.
*Preloading see pairing classification at the beginning of chapter D
Matching guide combinations, see selection matrix at the beginning of chapter D.
Ball guide capacity calculations at the end of chapter D.
Assembly guide lines / Dimensional requirements and tolerances at the end of chapter D.
Tolerance range:
yellow = .10
green = .20
red = .30

2081.49. Headed guide bush for ball bearing, ISO 9448-7

d_1	24 25	30 32	38 40	48 50
d_2	30 31	38 40	46 48	56 58
d_3	40	48	58	70
d_4	40	48	58	70
d_5	48	56	66	80
d_6	60	67	77	91
d_7	72.7	79.7	89.7	103.7
d_8	46	53	63	77
a	22.65	24.4	35.3	40.2
a_1	33.4	36.4	35.3	40.2
l_1	55	69	79	96
l_2	30	37	47	60
l_3	25	32	32	36
l*	71	80	95	120

*l = Nominal ordering length of ball cage - prefered length

Ordering Code (example):

Headed guide bush for ball bearing, ISO 9448-7		=2081.49.
Guide diameter d_1	38 mm =	038.
Classification TOL	yellow =	10
Order No		=2081.49. 038. 10

Flanged guide bush, sintered ferrite carbonitrided with long-term lubrication, ISO 9448-4



Mounting example

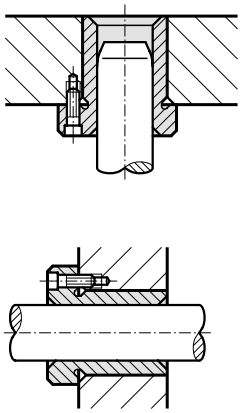

2091.31.

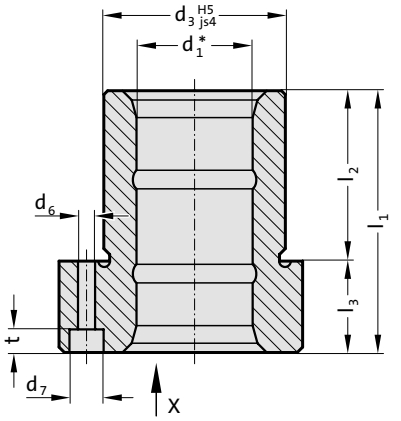

Material:
Sintered ferrite of high purity, carbonitrided, long-term lubrication

Execution:
Bearing surfaces, diameter d_3 and collar face precision ground.

Note:
The guide bush is fixed by means of 3 screws to DIN EN ISO 4762.
The screws are not contained in the scope of delivery.
Notes on sliding type guides at the beginning of chapter D.
Bearing clearance see pairing classification at the beginning of chapter D.
Matching guide combinations, see selection matrix at the beginning of chapter D.
Assembly guide lines / Dimensional requirements and tolerances at the end of chapter D.

Tolerance range:
yellow = .10
green = .20
red = .30

„ X ”

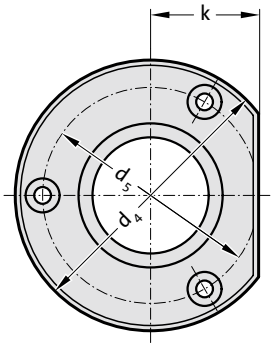

2091.31. Flanged guide bush, sintered ferrite carbonitrided with long-term lubrication, ISO 9448-4

d_1	19 20	24 25	30 32	38 40	48 50	60 63	80
d_3	32	40	48	58	70	85	105
d_4	50	63	72	85	104	120	148
d_5	40	50	58	70	86	100	125
d_6	4.5	5.5	5.5	6.6	9	9	11
d_7	8	10	10	11	15	15	18
k	18	23	28	33	38	46	56
l_1	52	62	72	77	102	102	125
l_2	37	37	47	47	60	60	75
l_3	15	25	25	30	42	42	50
t	4.6	5.7	5.7	6.8	9	9	11

Ordering Code (example):

Flanged guide bush, sintered ferrite carbonitrided with long-term lubrication, ISO 9448-4		=2091.31.
Guide diameter d_1	38 mm=	038.
Classification TOL	yellow =	10
Order No		=2091.31.038.10

subject to alterations

Flanged guide bush, sintered ferrite carbonitrided with long-term lubrication, ISO 9448-4

2091.32.

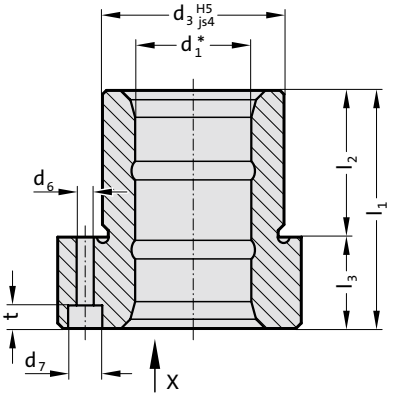

Mounting example

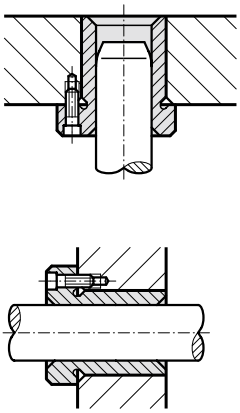



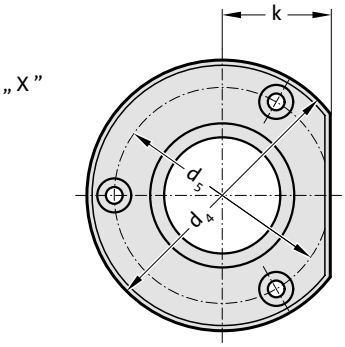

Material:
Sintered ferrite of high purity, carbonitrided, long-term lubrication

Execution:
Bearing surfaces, diameter d_3 and collar face precision ground.

Note:
The guide bush is fixed by means of 3 srews up to ø 16: with screws to DIN 6912, from ø 19: with screws to DIN EN ISO 4762.
The screws are not contained in the scope of delivery.
Notes on sliding type guides at the beginning of chapter D.
Bearing clearance see pairing classification at the beginning of chapter D.
Matching guide combinations, see selection matrix at the beginning of chapter D.
Assembly guide lines / Dimensional requirements and tolerances at the end of chapter D.

Tolerance range:
yellow = .10
green = .20
red = .30

2091.32. Flanged guide bush, sintered ferrite carbonitrided with long-term lubrication, ISO 9448-4

d_1	15 16	19 20	24 25	30 32	38 40	48 50	60 63
d_3	28	32	40	48	58	70	85
d_4	45	50	63	72	85	104	120
d_5	35	40	50	58	70	86	100
d_6	4.5	4.5	5.5	5.5	6.6	9	9
d_7	8	8	10	10	11	15	15
k	15	18	23	28	33	38	46
l_1	36	45	55	62	67	89	89
l_2	30	30	30	37	37	47	47
l_3	6	15	25	25	30	42	42
t	3.4	4.6	5.7	5.7	6.8	9	9

Ordering Code (example):

Flanged guide bush, sintered ferrite carbonitrided with long-term lubrication, ISO 9448-4		=2091.32.
Guide diameter d_1	32 mm =	032.
Classification TOL	yellow =	10
Order No		=2091.32.032.10

Flanged guide bush, sintered ferrite carbonitrided with long-term lubrication, ISO 9448-4



Mounting example

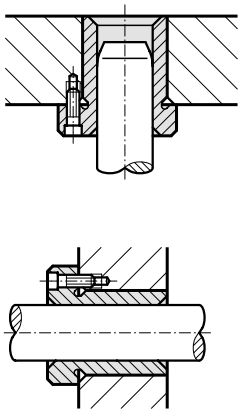

2091.34.

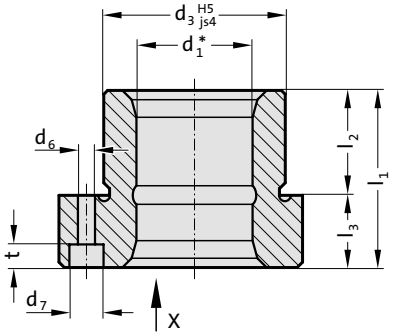

Material:
Sintered ferrite of high purity, carbonitrided, long-term lubrication

Execution:
Bearing surfaces, diameter d_3 and collar face precision ground.

Note:
The guide bush is fixed by means of 3 srews up to ø 16: with screws to DIN 6912, from ø 19: with screws to DIN EN ISO 4762.
The screws are not contained in the scope of delivery.
Notes on sliding type guides at the beginning of chapter D.
Bearing clearance see pairing classification at the beginning of chapter D.
Matching guide combinations, see selection matrix at the beginning of chapter D.
Assembly guide lines / Dimensional requirements and tolerances at the end of chapter D.

Tolerance range:
yellow = .10
green = .20
red = .30

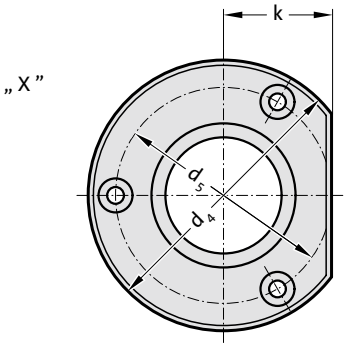

2091.34. Flanged guide bush, sintered ferrite carbonitrided with long-term lubrication, ISO 9448-4

d_1	15 16	19 20	24 25	30 32	38 40	48 50
d_3	28	32	40	48	58	70
d_4	45	50	63	72	85	104
d_5	35	40	50	58	70	86
d_6	4.5	4.5	5.5	5.5	6.6	9
d_7	8	8	10	10	11	15
k	15	18	23	28	33	38
l_1	29	38	38	45	55	62
l_2	23	23	23	30	30	37
l_3	6	15	15	15	25	25
t	3.4	4.6	5.7	5.7	6.8	9

Ordering Code (example):

Flanged guide bush, sintered ferrite carbonitrided with long-term lubrication, ISO 9448-4		=2091.34.
Guide diameter d_1	30 mm=	030.
Classification TOL	yellow =	10
Order No		=2091.34.030.10

subject to alterations

Flanged guide bush "ECO-LINE", bronzeplated, ISO 9448-4

2091.91.

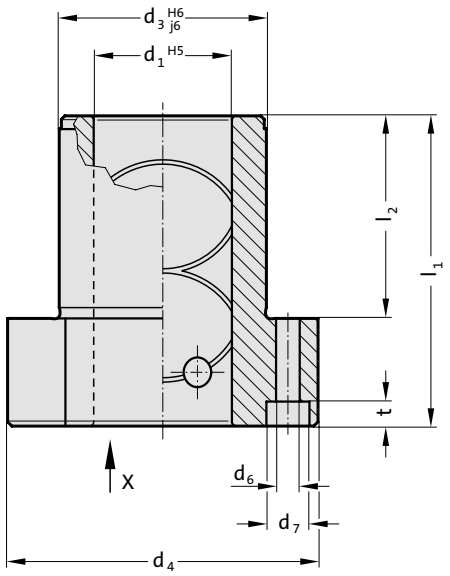

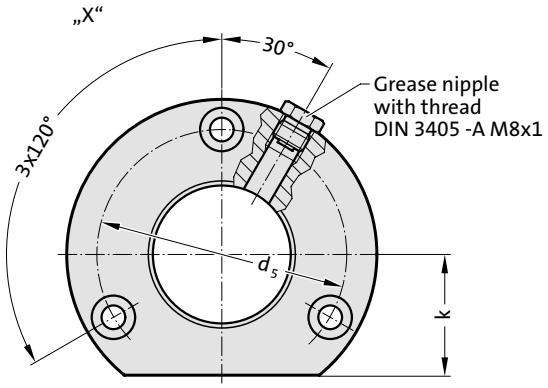

Mounting example

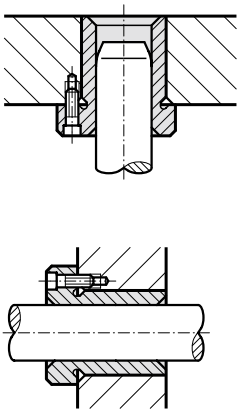



Material:

Steel, d_3 induction hardened

Execution:

Bronze plated internal bore.
Diameter d_3 and collar face precision ground.

Note:

The guide bush is fixed by means of 3 screws to DIN EN ISO 4762.
The screws are not contained in the scope of delivery.
Notes on sliding type guides at the beginning of chapter D.
Matching guide combinations, see selection matrix at the beginning of chapter D.
Assembly guide lines / Dimensional requirements and tolerances at the end of chapter D.

2091.91. Flanged guide bush "ECO-LINE", bronzeplated, ISO 9448-4

d_1	19 20	24 25	30 32	38 40	48 50	60 63	80
d_3	32	40	48	58	70	85	105
d_4	50	63	72	85	104	120	146
d_5	40	50	58	70	86	100	125
d_6	4.5	5.5	5.5	6.6	9	9	11
d_7	8	10	10	11	15	15	18
k	18	23	28	33	38	46	56
l_1	52	62	72	77	102	102	125
l_2	36	37	47	47	60	60	75
t	4.6	5.7	5.7	6.8	9	9	11

Ordering Code (example):

Flanged guide bush "ECO-LINE", bronzeplated, ISO 9448-4		=2091.91.
Guide diameter d_1	38 mm=	038
Order No		=2091.91.038

FIBRO

Flanged guide bush "ECO-LINE", bronzeplated, ISO 9448-4



Mounting example

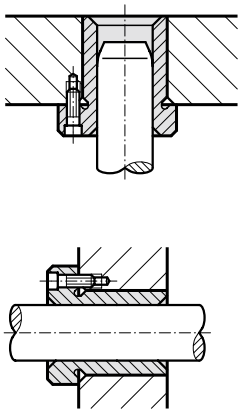

2091.92.

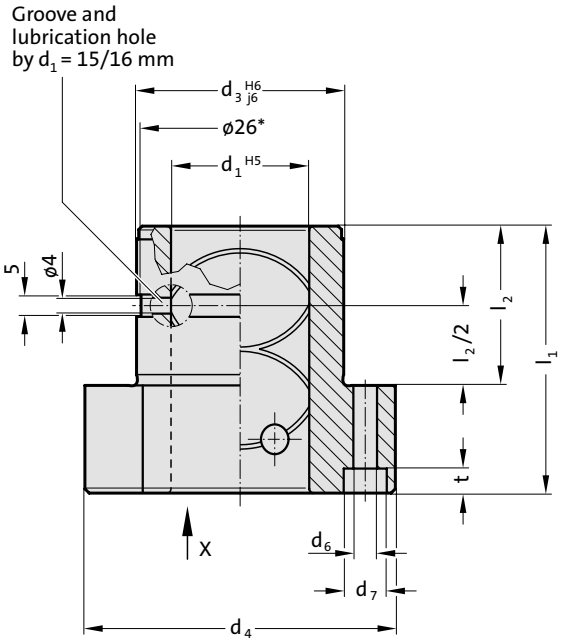

Material:

Steel, d_3 induction hardened

Execution:

Bronze plated internal bore.
Diameter d_3 and collar face precision ground.

Note:

The guide bush is fixed by means of 3 srews up to ø 16: with screws to DIN 6912, from ø 19: with screws to DIN EN ISO 4762.
The screws are not contained in the scope of delivery.
Notes on sliding type guides at the beginning of chapter D.
Matching guide combinations, see selection matrix at the beginning of chapter D.
Assembly guide lines / Dimensional requirements and tolerances at the end of chapter D.

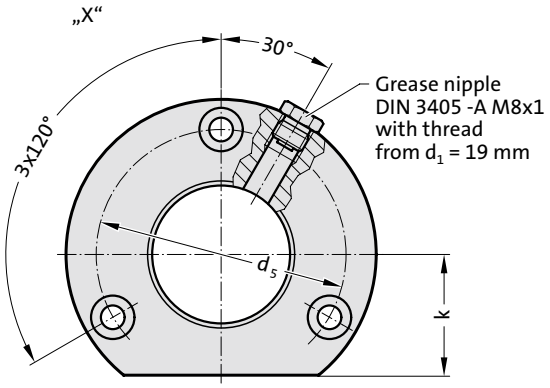

2091.92. Flanged guide bush "ECO-LINE", bronzeplated, ISO 9448-4

d_1	15 16	19 20	24 25	30 32	38 40	48 50	60 63
d_3	28	32	40	48	58	70	85
d_4	45	50	63	72	85	104	120
d_5	35	40	50	58	70	86	100
d_6	4.5	4.5	5.5	5.5	6.6	9	9
d_7	8	8	10	10	11	15	15
k	15	18	23	28	33	38	46
l_1	36	45	55	62	67	89	89
l_2	30	30	30	37	37	47	47
t	3.4	4.6	5.7	5.7	6.8	9	9

Ordering Code (example):

Flanged guide bush "ECO-LINE", bronzeplated, ISO 9448-4		=2091.92.
Guide diameter d_1	32 mm =	032
Order No		=2091.92.032

subject to alterations

Flanged guide bush "ECO-LINE", bronzeplated, ISO 9448-4

2091.94.

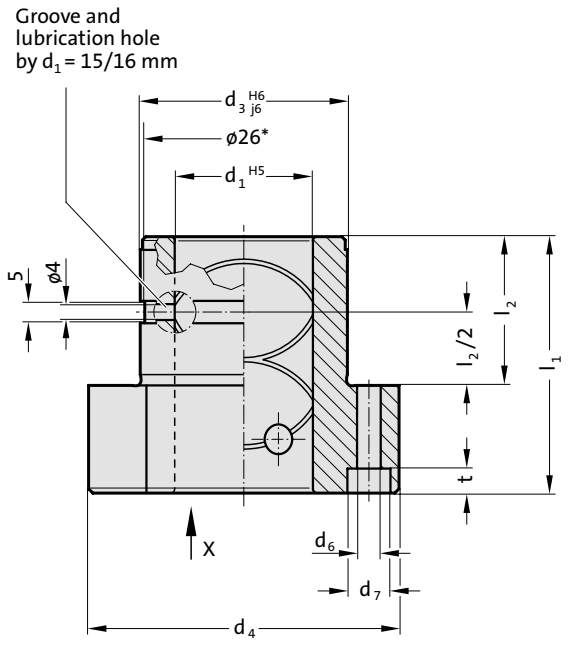

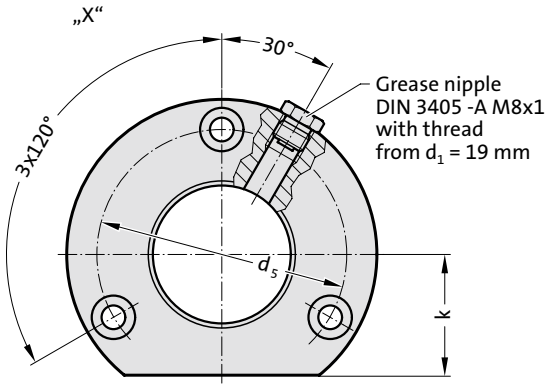

Mounting example

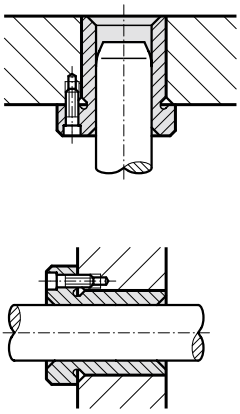



Material:

Steel, d_3 induction hardened

Execution:

Bronze plated internal bore.
Diameter d_3 and collar face precision ground.

Note:

The guide bush is fixed by means of 3 srews up to ø 16: with screws to DIN 6912, from ø 19: with screws to DIN EN ISO 4762.
The screws are not contained in the scope of delivery.
Notes on sliding type guides at the beginning of chapter D.
Matching guide combinations, see selection matrix at the beginning of chapter D.
Assembly guide lines / Dimensional requirements and tolerances at the end of chapter D.

2091.94. Flanged guide bush "ECO-LINE", bronzeplated, ISO 9448-4

d_1	15 16	19 20	24 25	30 32	38 40	48 50
d_3	28	32	40	48	58	70
d_4	45	50	63	72	85	104
d_5	35	40	50	58	70	86
d_6	4.5	4.5	5.5	5.5	6.6	9
d_7	8	8	10	10	11	15
k	15	18	23	28	33	38
l_1	29	38	38	45	55	62
l_2	23	23	23	30	30	37
t	3.4	4.6	5.7	5.7	6.8	9

Ordering Code (example):

Flanged guide bush "ECO-LINE", bronzeplated, ISO 9448-4		=2091.94.
Guide diameter d_1	30 mm=	030
Order No		=2091.94.030

Flanged guide bush "ECO-LINE", Bronze with solid lubricant rings, ISO 9448-4



Mounting example

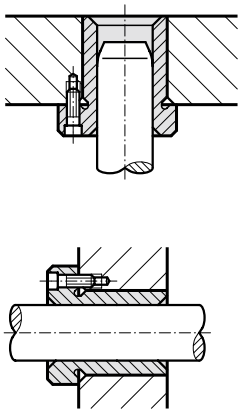

2091.71.

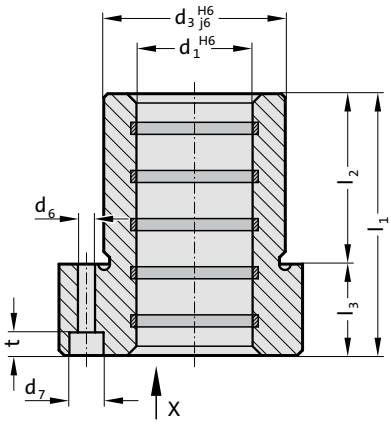

Material:

Bronze with solid lubricant, oilless lubricating

Execution:

Contact surface with solid lubricant rings
Diameter d_3 and collar face precision ground.

Note:

The guide bush is fixed by means of 3 screws to DIN EN ISO 4762.
The screws are not contained in the scope of delivery.
Notes on sliding type guides at the beginning of chapter D.
Matching guide combinations, see selection matrix at the beginning of chapter D.
Assembly guide lines / Dimensional requirements and tolerances at the end of chapter D.

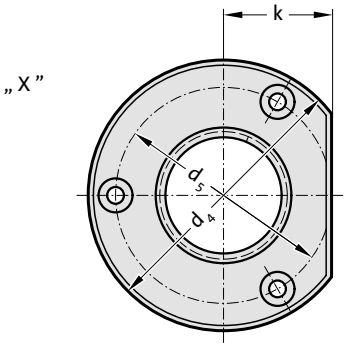

2091.71. Flanged guide bush "ECO-LINE", Bronze with solid lubricant rings, ISO 9448-4

d_1	19 20	24 25	30 32	38 40	48 50	60 63	80
d_3	32	40	48	58	70	85	105
d_4	50	63	72	85	104	120	148
d_5	40	50	58	70	86	100	125
d_6	4.5	5.5	5.5	6.6	9	9	11
d_7	8	10	10	11	15	15	18
k	18	23	28	33	38	46	56
l_1	52	62	72	77	102	102	125
l_2	37	37	47	47	60	60	75
l_3	15	25	25	30	42	42	50
t	4.6	5.7	5.7	6.8	9	9	11

Ordering Code (example):

Flanged guide bush "ECO-LINE", Bronze with solid lubricant rings, ISO 9448-4	=2091.71.	
Guide diameter d_1	38 mm=	038
Order No	=2091.71.038	

subject to alterations

Flanged guide bush "ECO-LINE", Bronze with solid lubricant rings, ISO 9448-4

2091.72.

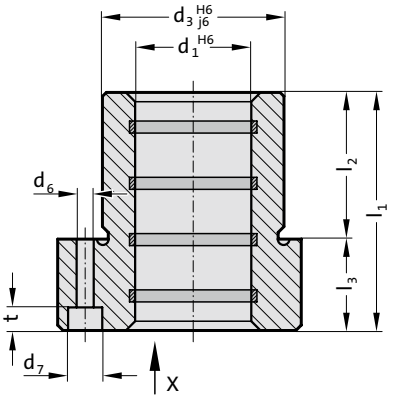

Mounting example

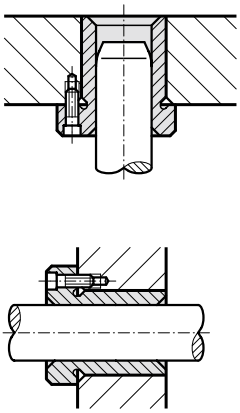



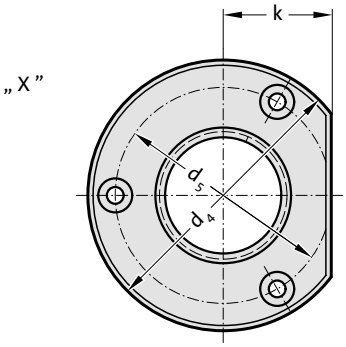

Material:

Bronze with solid lubricant, oilless lubricating

Execution:

Contact surface with solid lubricant rings
Diameter d_3 and collar face precision ground.

Note:

The guide bush is fixed by means of 3 srews up to ø 16: with screws to DIN 6912, from ø 19: with screws to DIN EN ISO 4762.
The screws are not contained in the scope of delivery.
Notes on sliding type guides at the beginning of chapter D.
Matching guide combinations, see selection matrix at the beginning of chapter D.
Assembly guide lines / Dimensional requirements and tolerances at the end of chapter D.

2091.72. Flanged guide bush "ECO-LINE", Bronze with solid lubricant rings, ISO 9448-4

d_1	15 16	19 20	24 25	30 32	38 40	48 50	60 63
d_3	28	32	40	48	58	70	85
d_4	45	50	63	72	85	104	120
d_5	35	40	50	58	70	86	100
d_6	4.5	4.5	5.5	5.5	6.6	9	9
d_7	8	8	10	10	11	15	15
k	15	18	23	28	33	38	46
l_1	36	45	55	62	67	89	89
l_2	30	30	30	37	37	47	47
l_3	6	15	25	25	30	42	42
t	3.4	4.6	5.7	5.7	6.8	9	9

Ordering Code (example):

Flanged guide bush "ECO-LINE", Bronze with solid lubricant rings, ISO 9448-4	=2091.72.	
Guide diameter d_1	32 mm =	032
Order No	=2091.72.032	

FIBRO

Flanged guide bush "ECO-LINE", Bronze with solid lubricant rings, ISO 9448-4



Mounting example

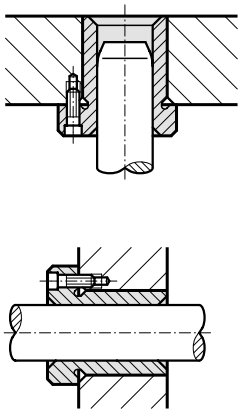

2091.74.

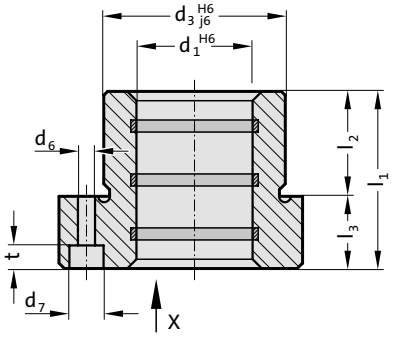

Material:

Bronze with solid lubricant, oilless lubricating

Execution:

Contact surface with solid lubricant rings
Diameter d_3 and collar face precision ground.

Note:

The guide bush is fixed by means of 3 srews up to ø 16: with screws to DIN 6912, from ø 19: with screws to DIN EN ISO 4762.
The screws are not contained in the scope of delivery.
Notes on sliding type guides at the beginning of chapter D.
Matching guide combinations, see selection matrix at the beginning of chapter D.
Assembly guide lines / Dimensional requirements and tolerances at the end of chapter D.

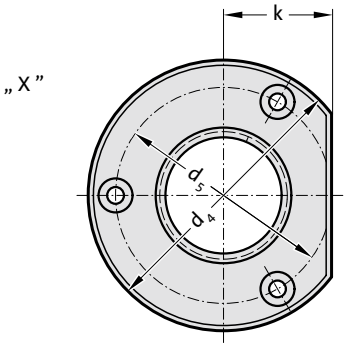

2091.74. Flanged guide bush "ECO-LINE", Bronze with solid lubricant rings, ISO 9448-4

d_1	15 16	19 20	24 25	30 32	38 40	48 50
d_3	28	32	40	48	58	70
d_4	45	50	63	72	85	104
d_5	35	40	50	58	70	86
d_6	4.5	4.5	5.5	5.5	6.6	9
d_7	8	8	10	10	11	15
k	15	18	23	28	33	38
l_1	29	38	38	45	55	62
l_2	23	23	23	30	30	37
l_3	6	15	15	15	25	25
t	3.4	4.6	5.7	5.7	6.8	9

Ordering Code (example):

Flanged guide bush "ECO-LINE", Bronze with solid lubricant rings, ISO 9448-4		=2091.74.
Guide diameter d_1	30 mm=	030
Order No		=2091.74.030

subject to alterations

Flanged guide bush for ball bearing, ISO 9448-5

2091.44.

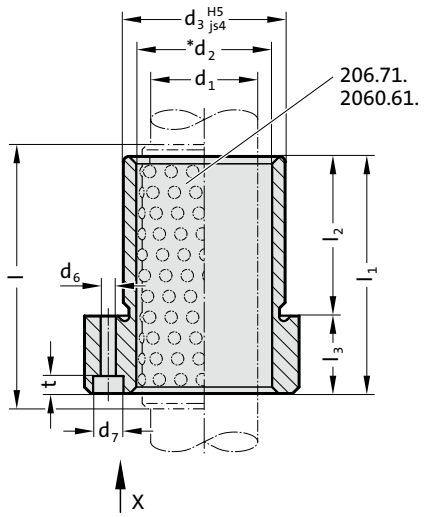

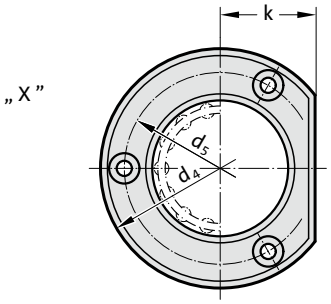

Mounting example

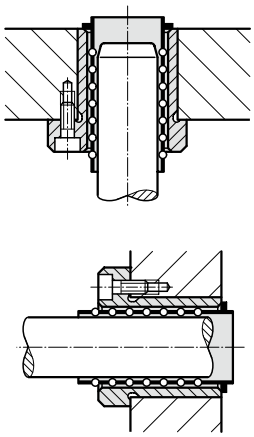



Material:
Tool steel, hardened 62 ± 2 HRC

Execution:
Bearing surfaces honed,
outside diameter precision ground.

Note:
The guide bush is fixed by means of 3 screws to DIN EN ISO 4762.
The screws are not contained in the scope of delivery.
Notes on ball bearing type guides at the beginning of chapter D.
*Preloading see pairing classification at the beginning of chapter D
Matching guide combinations, see selection matrix at the beginning of chapter D.
Ball guide capacity calculations at the end of chapter D.
Assembly guide lines / Dimensional requirements and tolerances at the end of chapter D.
Tolerance range:
yellow = .10
green = .20
red = .30

2091.44. Flanged guide bush for ball bearing, ISO 9448-5

d_1	19 20	24 25	30 32	38 40	48 50	60 63	80
d_2	25 26	30 31	38 40	46 48	56 58	68 71	92
d_3	32	40	48	58	70	85	105
d_4	50	63	72	85	104	120	148
d_5	40	50	58	70	86	100	125
d_6	4.5	5.5	5.5	6.6	9	9	11
d_7	8	10	10	11	15	15	18
k	18	23	28	33	38	46	56
l_1	52	62	72	77	102	102	125
l_2	37	37	47	47	60	60	75
l_3	15	25	25	30	42	42	50
t	3.4	5.7	5.7	6.8	9	9	11
l*	71	71	80	95	120	120	140

*l = Nominal ordering length of ball cage - prefered length

Ordering Code (example):

Flanged guide bush for ball bearing, ISO 9448-5		=2091.44.
Guide diameter d_1	38 mm =	038.
Classification TOL	yellow =	10
Order No		=2091.44. 038. 10

Flanged guide bush for ball bearing, ISO 9448-5



Mounting example

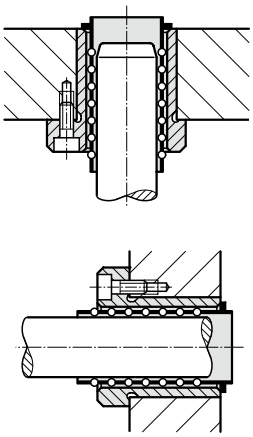

2091.45.

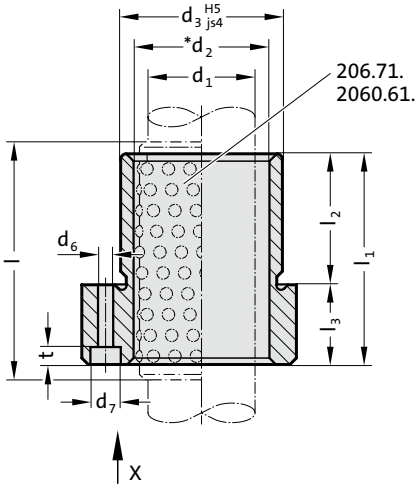

Material:

Tool steel, hardened 62 ± 2 HRC

Execution:

Bearing surfaces honed,
outside diameter precision ground.

Note:

The guide bush is fixed by means of 3 srews up to ø 16: with screws to DIN 6912, from ø 19: with screws to DIN EN ISO 4762.
The screws are not contained in the scope of delivery.
Notes on ball bearing type guides at the beginning of chapter D.
*Preloading see pairing classification at the beginning of chapter D
Matching guide combinations, see selection matrix at the beginning of chapter D.
Ball guide capacity calculations at the end of chapter D.
Assembly guide lines / Dimensional requirements and tolerances at the end of chapter D.
Tolerance range:
yellow = .10
green = .20
red = .30

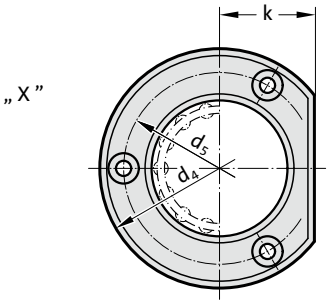

2091.45. Flanged guide bush for ball bearing, ISO 9448-5

d_1	15 16	19 20	24 25	30 32	38 40	48 50	60 63
d_2	21 22	25 26	30 31	38 40	46 48	56 58	68 71
d_3	28	32	40	48	58	70	85
d_4	45	50	63	72	85	104	120
d_5	35	40	50	58	70	86	100
d_6	4.5	4.5	5.5	5.5	6.6	9	9
d_7	8	8	10	10	11	15	15
k	15	18	23	28	33	38	46
l_1	36	45	55	62	67	89	89
l_2	30	30	30	37	37	47	47
l_3	6	15	25	25	30	42	42
t	3.4	4.6	5.7	5.7	6.8	9	9
l*	45	56	71	71	80	95	95

*l = Nominal ordering length of ball cage - prefered length

Ordering Code (example):

Flanged guide bush for ball bearing, ISO 9448-5		=2091.45.
Guide diameter d_1	32 mm	= 032.
Classification TOL	yellow	= 10
Order No		=2091.45. 032. 10

subject to alterations

Flanged guide bush for ball bearing, ISO 9448-5

2091.46.

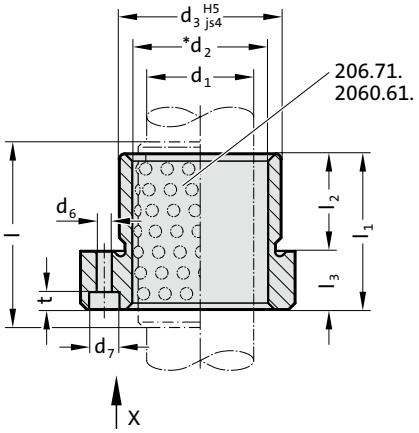

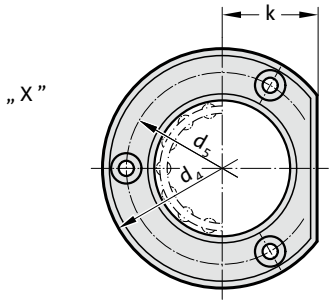

Mounting example

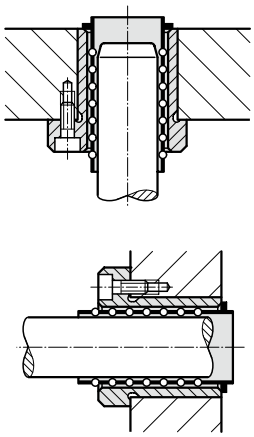



Material:

Tool steel, hardened 62 ± 2 HRC

Execution:

Bearing surfaces honed,
outside diameter precision ground.

Note:

The guide bush is fixed by means of 3 srews up to ø 16: with screws to DIN 6912, from ø 19: with screws to DIN EN ISO 4762.
The screws are not contained in the scope of delivery.
Notes on ball bearing type guides at the beginning of chapter D.
*Preloading see pairing classification at the beginning of chapter D
Matching guide combinations, see selection matrix at the beginning of chapter D.
Ball guide capacity calculations at the end of chapter D.
Assembly guide lines / Dimensional requirements and tolerances at the end of chapter D.
Tolerance range:
yellow = .10
green = .20
red = .30

2091.46. Flanged guide bush for ball bearing, ISO 9448-5

d_1	12	15 16	19 20	24 25	30 32	38 40	48 50
d_2	16	21 22	25 26	30 31	38 40	46 48	56 58
d_3	26	28	32	40	48	58	70
d_4	43	45	50	63	72	85	104
d_5	33	35	40	50	58	70	86
d_6	4.5	4.5	4.5	5.5	5.5	6.6	9
d_7	8	8	8	10	10	11	15
k	13	15	18	23	28	33	38
l_1	25	29	38	38	45	55	62
l_2	16	23	23	23	30	30	37
l_3	9	6	15	15	15	25	25
t	4.6	3.4	4.6	5.7	5.7	6.8	9
l*	40	45	45	45	56	63	80

*l = Nominal ordering length of ball cage - prefered length

Ordering Code (example):

Flanged guide bush for ball bearing, ISO 9448-5		=2091.46.
Guide diameter d_1	25 mm =	025.
Classification TOL	yellow =	10
Order No		=2091.46. 025.10

FIBRO

Headed guide bush, sintered ferrite carbonitrided with long-term lubrication, ~AFNOR



Mounting example

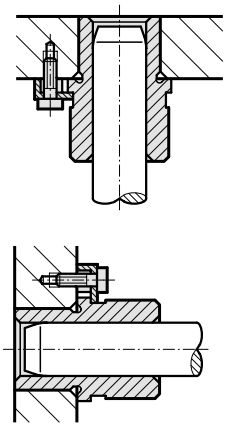

210.31.

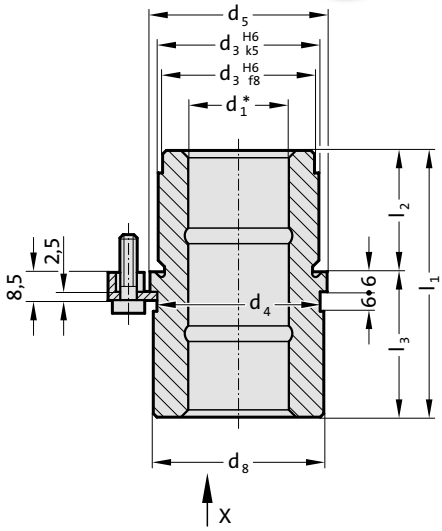

Material:

Sintered ferrite of high purity, carbonitrided, long-term lubrication

Execution:

Bearing surfaces, diameter d_3 and collar face precision ground.

Note:

The attachment is with 3 Screw clamp, from Ø d_1 = 38 with 4 Screw clamp , which are included in delivery (Order No: 207.45 - Screw clamp incl. socket cap screw DIN 6912, Head Ø 13).
Notes on sliding type guides at the beginning of chapter D.
Bearing clearance see pairing classification at the beginning of chapter D.
Matching guide combinations, see selection matrix at the beginning of chapter D.
Assembly guide lines / Dimensional requirements and tolerances at the end of chapter D.

Tolerance range:
yellow = .10
green = .20
red = .30

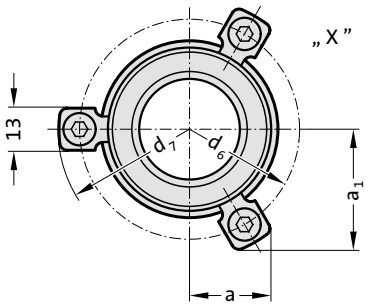

210.31. Headed guide bush, sintered ferrite carbonitrided with long-term lubrication, ~AFNOR

d_1	19 20	25	32	40	50
d_3	32	40	50	63	80
d_4	32	40	50	63	80
d_5	36	45	56	70	90
d_6	49	57	67	81	101
d_7	61.7	69.7	79.7	93.7	113.7
d_8	35	43.5	53	67	87
a	19.9	21.9	24.4	36	43
a_1	28.6	32.1	36.4	36	43
l_1	66	70	83	98	120
l_2	30	30	38	48	61
l_3	36	40	45	50	59

Ordering Code (example):

Headed guide bush, sintered ferrite carbonitrided with long-term lubrication, ~AFNOR		=210.31.
Guide diameter d_1	32 mm	= 032.
Classification TOL	yellow	= 10
Order No		=210.31. 032.10

subject to alterations

Headed guide bush, sintered ferrite carbonitrided with long-term lubrication, ~AFNOR

210.34.

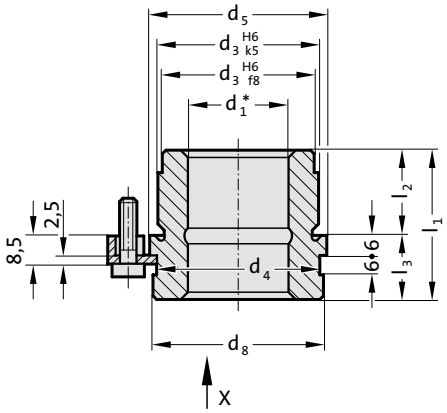

Mounting example

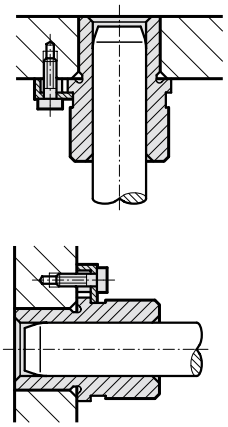



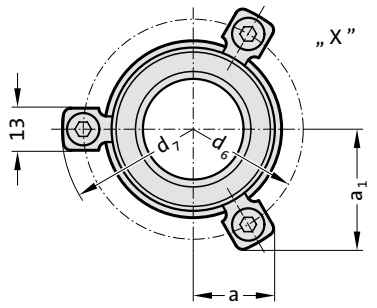

Material:

Sintered ferrite of high purity, carbonitrided, long-term lubrication

Execution:

Bearing surfaces, diameter d_3 and collar face precision ground.

Note:

The attachment is with 3 Screw clamp, from Ø d_1 = 38 with 4 Screw clamp , which are included in delivery (Order No: 207.45 - Screw clamp incl. socket cap screw DIN 6912, Head Ø 13).
Notes on sliding type guides at the beginning of chapter D.
Bearing clearance see pairing classification at the beginning of chapter D.
Matching guide combinations, see selection matrix at the beginning of chapter D.
Assembly guide lines / Dimensional requirements and tolerances at the end of chapter D.

Tolerance range:
yellow = .10
green = .20
red = .30

210.34. Headed guide bush, sintered ferrite carbonitrided with long-term lubrication, ~AFNOR

d_1	19 20	25	32	40	50
d_3	32	40	50	63	80
d_4	32	40	50	63	80
d_5	36	45	56	70	90
d_6	49	57	67	81	101
d_7	61.7	69.7	79.7	93.7	113.7
d_8	35	43.5	53	67	87
a	19.9	21.9	24.4	36	43
a_1	28.6	32.1	36.4	36	43
l_1	42	50	63	76	96
l_2	30	38	48	61	78
l_3	12	12	15	15	18

Ordering Code (example):

Headed guide bush, sintered ferrite carbonitrided with long-term lubrication, ~AFNOR		=210.34.
Guide diameter d_1	32 mm =	032.
Classification TOL	yellow =	10
Order No		=210.34. 032.10

Headed guide bush, sintered ferrite carbonitrided with long-term lubrication, ~AFNOR



Mounting example

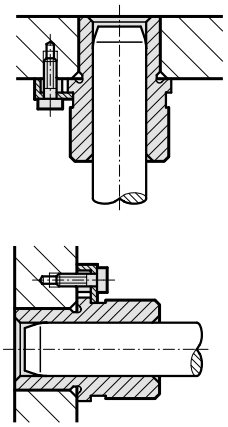

210.35.

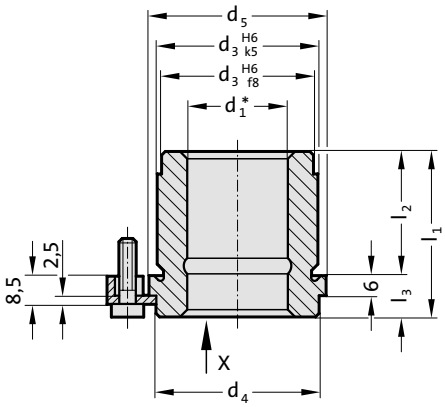

Material:

Sintered ferrite of high purity, carbonitrided, long-term lubrication

Execution:

Bearing surfaces, diameter d_3 and collar face precision ground.

Note:

The attachment is with 3 Screw clamp, from Ø d_1 = 38 with 4 Screw clamp , which are included in delivery (Order No: 207.45 - Screw clamp incl. socket cap screw DIN 6912, Head Ø 13).
Notes on sliding type guides at the beginning of chapter D.
Bearing clearance see pairing classification at the beginning of chapter D.
Matching guide combinations, see selection matrix at the beginning of chapter D.
Assembly guide lines / Dimensional requirements and tolerances at the end of chapter D.

Tolerance range:
yellow = .10
green = .20
red = .30

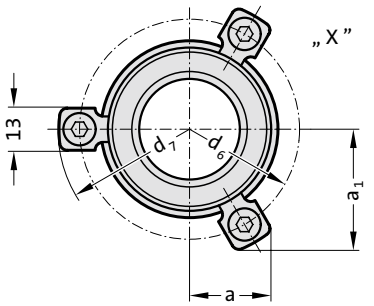

210.35. Headed guide bush, sintered ferrite carbonitrided with long-term lubrication, ~AFNOR

d_1	19 20	25	32	40	50
d_3	32	40	50	63	80
d_4	32	40	50	63	80
d_5	36	45	56	70	90
d_6	49	57	67	81	101
d_7	61.7	69.7	79.7	93.7	113.7
a	19.9	21.9	24.4	36	43
a_1	28.6	32.1	36.4	36	43
l_1	28	32	37	44	44
l_2	16	20	25	32	32
l_3	12	12	12	12	12

Ordering Code (example):

Headed guide bush, sintered ferrite carbonitrided with long-term lubrication, ~AFNOR		=210.35.
Guide diameter d_1	32 mm	= 032.
Classification TOL	yellow	= 10
Order No		=210.35. 032.10

subject to alterations

Headed guide bush for ball bearing, ~AFNOR



210.44.

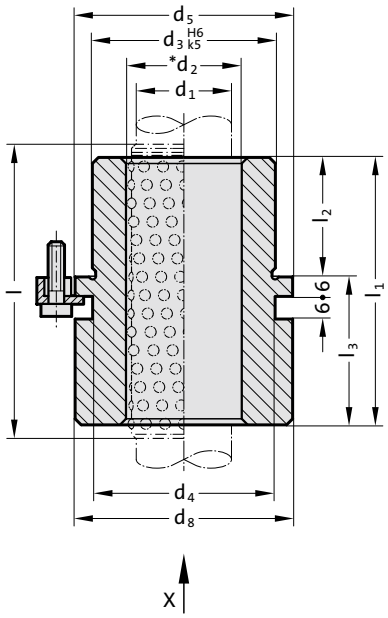

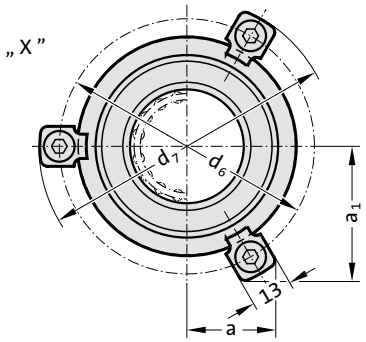

Material:

Tool steel, hardened 62 ± 2 HRC

Execution:

Bearing surfaces honed.
Diameter d_3 and collar face precision ground.

Note:

The attachment is with 3 Screw clamp, from Ø d_1 = 38 with 4 Screw clamp , which are included in delivery (Order No: 207.45 - Screw clamp incl. socket cap screw DIN 6912, Head Ø 13).
Notes on ball bearing type guides at the beginning of chapter D.
*Preloading see pairing classification at the beginning of chapter D
Matching guide combinations, see selection matrix at the beginning of chapter D.
Ball guide capacity calculations at the end of chapter D.
Assembly guide lines / Dimensional requirements and tolerances at the end of chapter D.

Tolerance range:
yellow = .10
green = .20
red = .30

Mounting example

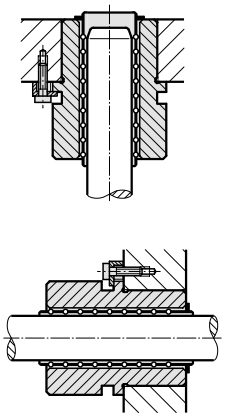

subject to alterations

Headed guide bush for ball bearing, ~AFNOR

210.44. Headed guide bush for ball bearing, ~AFNOR

d_1	16	20	25	32	40	50	63
d_2	22	26	31	40	48	58	71
d_3	28	32	40	50	63	80	90
d_4	29	32	40	50	63	80	90
d_5	32	36	45	56	70	90	110
d_6	45	49	57	67	81	101	121
d_7	57.7	61.7	69.7	79.7	93.7	113.7	131.7
d_8	31	35	43.5	53.5	67	87	107
a	18.9	19.9	21.9	24.4	36	43	50.1
a_1	26.9	28.6	32.1	36.4	36	43	50.1
l_3	32	36	40	45	50	63	63
l_2*	l_1/l						
23	55/63		63/71	68/80			
30	62/71	66/71	70/80	75/80	80/95		
38	70/71	74/80	78/95	83/95	88/95	101/120	
48			88/100	93/105	98/105	111/120	
61			101/120	106/120	111/120	124/140	
78				123/120	128/140	141/160	
98					148/160	161/180	161/180
123							186/200

*l = Nominal ordering length of ball cage - prefered length

Ordering Code (example):

Headed guide bush for ball bearing, ~AFNOR		=210.44.
Guide diameter d_1	32 mm	= 032.
Installation length l_2	61 mm	= 061.
Classification TOL	yellow	= 10
Order No		=210.44. 032.061.10

Headed guide bush for ball bearing, ~AFNOR



210.46.

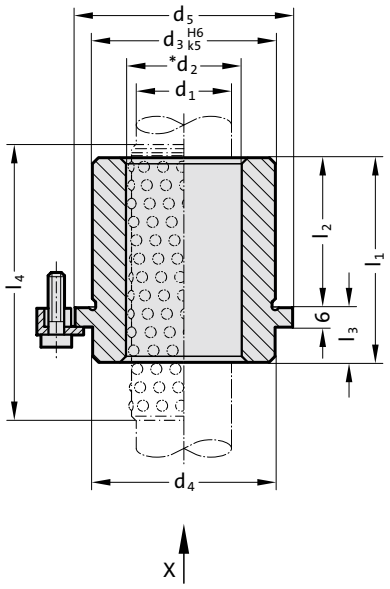

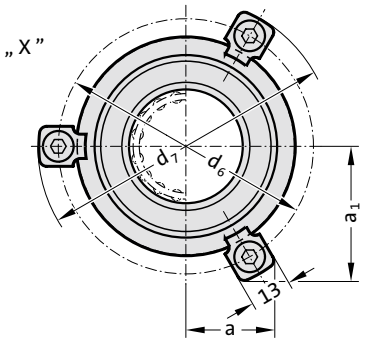

Material:

Bush: tool steel
Hardness: 62 ± 2HRC
Ball Cage: brass
Balls: hardened steel
DIN 5401

Execution:

Bearing surfaces honed.
Outside diameter fine-ground.

Note:

The attachment is with 3 Screw clamp, from Ø d_1 = 38 with 4 Screw clamp , which are included in delivery (Order No: 207.45 - Screw clamp incl. socket cap screw DIN 6912, Head Ø 13).
Notes on ball bearing type guides at the beginning of chapter D.
Preloading see pairing classification at the beginning of chapter D
Matching guide combinations, see selection matrix at the beginning of chapter D.
Ball guide capacity calculations at the end of chapter D.
Assembly guide lines / Dimensional requirements and tolerances at the end of chapter D.

Tolerance range:
yellow = .10
green = .20
red = .30

Mounting example

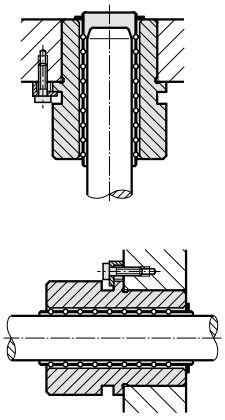

subject to alterations

Headed guide bush for ball bearing, ~AFNOR

210.46. Headed guide bush for ball bearing, ~AFNOR

d_1	16	20	25	32	40	50	63
d_2	22	26	31	40	48	58	71
d_3	28	32	40	50	63	80	90
d_4	29	32	40	50	63	80	90
d_5	32	36	45	56	70	90	110
d_6	45	49	57	67	81	101	121
d_7	57.7	61.7	69.7	79.7	93.7	113.7	131.7
a	18.9	19.9	21.9	24.4	36	43	50.1
a_1	26.9	28.6	32.1	36.4	36	43	50.1
l_3	10	12	12	15	15	18	20
l_2*	l_1/l						
23	33/45						
30	40/45	42/45	42/45	45/56			
38	48/56	50/56	50/56	53/71			
48	58/63	60/71	60/71	63/71	63/80		
61			73/80	76/80	76/95	79/95	
78			90/105	93/105	93/105	96/405	
98				113/120	113/120	116/140	118/120
123							143/160

*l = Nominal ordering length of ball cage - prefered length

Ordering Code (example):

Headed guide bush for ball bearing, ~AFNOR		=210.46.
Guide diameter d_1	32 mm=	032.
Installation length l_2	38 mm=	038.
Classification TOL	yellow =	10
Order No		=210.46. 032.038.10

Guide bush with collar, for ball bearing, ~AFNOR

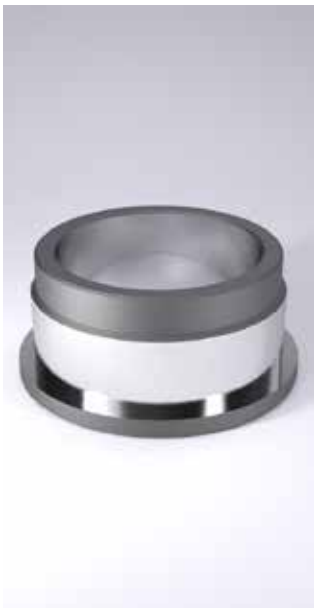

Mounting example

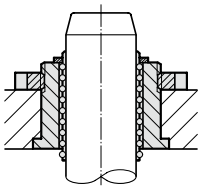

210.45.

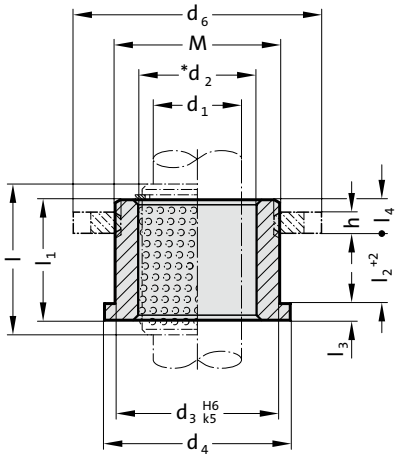

Material:
Tool steel, hardened 62 ± 2 HRC

Execution:
Bearing surfaces honed,
outside diameter precision ground.

Note:
The guide bush is fixed with slotted nut 207.48.
Notes on ball bearing type guides at the beginning of chapter D.
*Preloading see pairing classification at the beginning of chapter D
Matching guide combinations, see selection matrix at the beginning of chapter D.
Ball guide capacity calculations at the end of chapter D.
Assembly guide lines / Dimensional requirements and tolerances at the end of chapter D.
Tolerance range:
yellow = .10
green = .20
red = .30

210.45. Guide bush with collar, for ball bearing, ~AFNOR

d_1	16	16	20	20	20	25	25	25	32	32	32	40	40	40	50	50
d_2	22	22	26	26	26	31	31	31	40	40	40	48	48	48	58	58
d_3	28	28	32	32	32	40	40	40	50	50	50	63	63	63	80	80
d_4	32	32	36	36	36	45	45	45	56	56	56	70	70	70	90	90
d_6	40	40	44	44	44	55	55	55	65	65	65	81	81	81	100	100
M	M27x1	M27x1	M30x1	M30x1	M30x1	M39x1	M39x1	M39x1	M48x1	M48x1	M48x1	M60x1	M60x1	M60x1	M76x1	M76x1
h	3	3	4	4	4	4	4	4	5	5	5	6	6	6	8	8
l_1	16	20	17	21	25	22	26	31	26	31	38	32	39	47	41	49
l_2	8	12	8	12	16	12	16	21	15	20	27	20	27	35	26	34
l_3	3	3	3	3	3	3	3	3	4	4	4	4	4	4	5	5
l_4	5	5	6	6	6	7	7	7	7	7	7	8	8	8	10	10
l*	24	28	24	28	31	31	40	40	40	40	50	50	50	56	50	63

*l = Nominal ordering length of ball cage - prefered length

Guide bush with collar, for ball bearing, ~AFNOR		=	210.45.
Guide diameter d_1	32 mm	=	032.
Total length l_1	26 mm	=	026.
Classification TOL	yellow	=	10
Order No		=	210.45. 032. 026. 10

subject to alterations

Guide bush with collar, bronze coated, ~AFNOR

210.85.

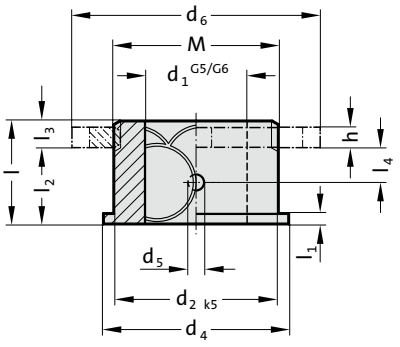

Mounting example

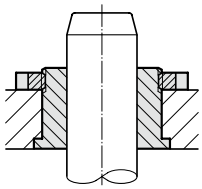

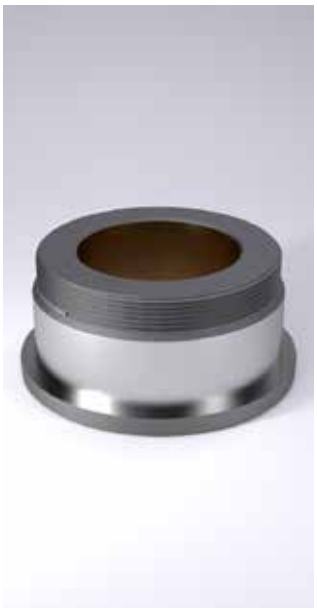

Material:

1.0503
Ø d_2 induction hardened to 500+100 HV 10

Execution:

Bronze coated internal bore.
Diameter d_2 and collar face precision ground.
up to Ø d_1 = 25 tolerance G6
from Ø d_1 = 32 tolerance G5

Note:

The guide bush is fixed with slotted nut 207.48.
Notes on sliding type guides at the beginning of chapter D.
Matching guide combinations, see selection matrix at the beginning of chapter D.
Assembly guide lines / Dimensional requirements and tolerances at the end of chapter D.

210.85. Guide bush with collar, bronze coated, ~AFNOR

d_1	16	16	20	20	25	25	32	32	40	40	50	50
TOL	+0.006/ +0.017	+0.006/ +0.017	+0.007/ +0.020	+0.007/ +0.020	+0.007/ +0.020	+0.007/ +0.020	+0.009/ +0.020	+0.009/ +0.020	+0.009/ +0.020	+0.009/ +0.020	+0.009/ +0.020	+0.009/ +0.020
d_2	28	28	32	32	40	40	50	50	63	63	80	80
d_4	32	32	36	36	45	45	56	56	70	70	90	90
d_5	3	3	4	4	4	4	4	4	7	7	7	7
d_6	40	40	44	44	55	55	65	65	81	81	100	100
h	3	3	4	4	4	4	5	5	6	6	8	8
M	M27x1	M27x1	M30x1	M30x1	M39x1	M39x1	M48x1	M48x1	M60x1	M60x1	M76x1	M76x1
l	16	20	21	25	26	31	31	38	39	47	41	49
l_1	3	3	3	3	3	3	4	4	4	4	5	5
l_2	11	15	15	19	19	24	24	31	31	39	31	39
l_3	5	5	6	6	7	7	7	7	8	8	10	10
l_4	5.5	7.5	5	9.5	9.5	12	12	15.5	15.5	19.5	15.5	19.5

Guide bush with collar, bronze coated, ~AFNOR		=210.85.
Guide diameter d_1	32 mm =	032.
Total length l	31 mm =	031
Order No		=210.85. 032. 031

Slotted nut



207.48.

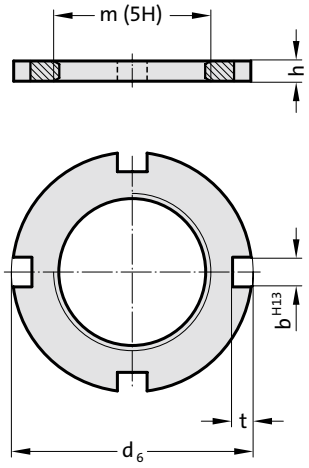

Material:
Steel

Note:
For fixing the guide bushes 210.45. and 210.85.

207.48. Slotted nut

Order No	d_6	b	t	h	m
207.48.016	40	5	3	3	M27 x 1
207.48.020	44	5	4	4	M30 x 1
207.48.025	55	6	4	4	M39 x 1
207.48.032	65	6	5	5	M48 x 1
207.48.040	81	7	6	6	M60 x 1
207.48.050	100	8	8	8	M76 x 1

subject to alterations



Oilless Guide Elements

FIBRO

Oilless guide elements
General description

Oilless Guide Elements with embedded solid lubricants are used in applications of linear or rotary motion in toolmaking, general machine construction and similar engineering uses. The structure of the base material provides closely spaced deposits of solid lubricant – properties and specifications as per table below.

The elements satisfy highest demands in terms of load bearing capacity at low sliding speeds, within an extensive temperature band.

The lubricant deposits are arranged in staggered geometrical patterns, thus ensuring optimal lubrication effect along the sliding motion, especially with counter bearings which are hardened and ground.

The sliding surfaces should be lightly greased with lithium grease emulsion, prior to commissioning.

On flat guideways and pillar guides, from 25 to 30 per cent of the sliding surfaces consist of lubricant deposits. Surfaces of counter bearings must have a ground finish, preferably with a lay parallel with the sliding motion.

Choice of element-type

Standard:

– for general uses at temperatures up to 200°C

Special Types on request

Advantages of oilless guide elements

– good emergency sliding properties
– highest carrying capacity at low speed
– use under water or with chemical solutions
– extremely wide temperature resistance – hot and cold
– damping properties in presence of vibration

Oilless guide elements – Material data

chemical composition	CU 60–66% Al 5,0–7,5% Fe 2,0–4,0% Mn 2,5–5,0% Zn 17,5–31,5%
specific density kg/dm³	8,2
tensile strength Rm N/mm²	770
Brinell hardness HB 10	180–210
shear strength N/mm²	560
yield limit Rp 0,2 N/mm²	450
elongation to fracture A5 %	8
elongation %	12
modulus of elasticity kN/mm²	105–115
stroking velocity m/min	15
co-efficient of friction	0,04–0,10
temperature conductance W/(m × K)	45–55
temperature resistance °C	+300
co-efficient of thermal expansion /°C	$1{,}6–2{,}0 \times 10^{-5}$
co-efficient of shrinkage %	1,8–2,3
electric conductance m/(Ω × mm²)	7–8
alt. flexural strength N/mm²	±150
ratio sliding surface to lubricant deposits (%)	25–30

PV value

The permissible bearing load is determined from the pressure and the PV value, which defines the bearing wear.

The PV value is the product of surface pressure (P) and running velocity (V).

The permissible bearing load is determined from the PV value.

PV = P × V (N/cm² × m/min.)
P = F/A (N/cm²)
F = max. load (N)
A = projected area of the bearing

Surface pressure, temperature, speed and lubrication

Surface pressure max. (N/cm²)	Temp. (C°)	Speed (m/min.)	PV value (N/cm² × m/min)	Lubrication
5000	80	30	10000	Initial
3000	150	60	20000	Pressure lubrication

subject to alterations

Thrust washer, Bronze with solid lubricant

2053.70.

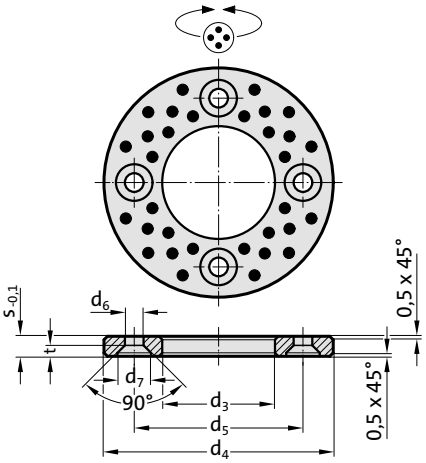



Material:
Bronze with solid lubricant, oilless lubricating

Note:
For combination loads use together with Bushes 2052.70.
Screws not included.

Fixing:
from d_3 = 10,2 2 X M3
from d_3 = 20,2 2 X M5
from d_3 = 40,2 2 X M6
from d_3 = 50,3 4 X M6
from d_3 = 60,3 4 X M8
from d_3 = 90,5 4 X M10

2053.70. Thrust washer, Bronze with solid lubricant

d_1	10	12	13	14	15	16	18	20	25	30	35	40	45	50	55	60	65	70	75	80	90	100	120
d_3	10.2	12.2	13.2	14.2	15.2	16.2	18.2	20.2	25.2	30.2	35.2	40.2	45.3	50.3	55.3	60.3	65.3	70.3	75.3	80.3	90.5	100.5	120.5
d_4	30	40	40	40	50	50	50	50	55	60	70	80	90	100	110	120	125	130	140	150	170	190	200
d_5	20	28	28	28	28	28	35	35	40	45	50	60	67.5	75	85	90	95	100	110	120	140	160	175
d_6	3.4	3.4	3.4	3.4	3.4	3.4	3.4	5.5	5.5	5.5	5.5	6.6	6.6	6.6	6.6	9	9	9	9	9	11	11	11
d_7	6.9	6.9	6.9	6.9	6.9	6.9	6.9	11.5	11.5	11.5	11.5	13.7	13.7	13.7	13.7	18.3	18.3	18.3	18.3	18.3	22.7	22.7	22.7
s	3	3	3	3	3	3	3	5	5	5	5	7	7	8	8	8	8	10	10	10	10	10	10
t	1.8	1.8	1.8	1.8	1.8	1.8	1.8	3	3	3	3	3.6	3.6	3.6	3.6	4.6	4.6	4.6	4.6	4.6	5.9	5.9	5.9

Ordering Code (example):

Thrust washer, Bronze with solid lubricant		=2053.70.
Guide diameter d_1	40 mm=	040
Order No		=2053.70.040

Guide bush, Bronze with solid lubricant



2052.70.

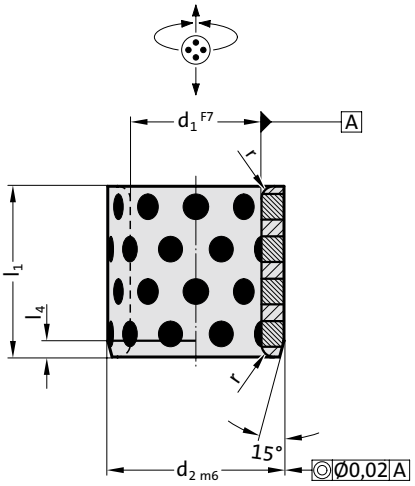

Material:
Bronze with solid lubricant, oilless lubricating

Note:
Bushes can be used with radial or axial motion.
Matching guide combinations, see selection matrix at the beginning of chapter D.
Assembly guide lines / Dimensional requirements and tolerances at the end of chapter D.

Attention:
Note that press fitment reduces inside bush diameter.

2052.70. Guide bush, Bronze with solid lubricant

d_1	8	10	10	12	13	14	15	16	18	19	20	20	20	24	25	25	25	28	30	30	30	31.5	32	35	35	38	40	40
d_2	12	14	15	18	19	20	21	22	24	25	26	28	30	32	32	33	35	38	38	40	42	40	42	44	45	48	50	55
r	0.5	0.5	0.5	0.5	0.5	0.5	0.75	0.75	0.75	0.75	0.75	0.75	0.75	0.75	0.75	0.75	0.75	0.75	0.75	0.75	0.75	0.75	0.75	0.75	0.75	1.5	1.5	1.5
l_4	2	2	2	2	2	2	2	2	2	2	4	4	4	4	4	4	4	4	4	4	4	4	4	4	4	4	4	4
l_1																												
8	●	●																										
10	●	●	●	●	●	●	●	●																				
12	●	●		●		●	●	●																				
15	●	●		●	●	●	●	●	●			●																
16				●	●		●	●	●			●	●			●	●											
20		●		●	●	●	●	●	●			●	●			●	●		●	●					●		●		
25				●		●	●	●	●			●	●			●	●		●	●				●	●		●	●	
30				●		●	●	●	●			●	●			●	●	●	●	●		●	●	●	●	●	●	●	
35								●	●			●	●			●	●		●	●				●	●		●	●	
37										●		●																	
40								●	●		●	●	●			●	●	●	●	●		●	●	●	●	●	●	●	
47														●		●													
50												●			●	●			●	●				●	●		●	●	
60																●			●	●	●		●	●	●		●	●	
70																											●	
77																										●	●	
80																											●	

Ordering Code (example):

Guide bush, Bronze with solid lubricant		=2052.70.
Guide diameter d_1	40 mm	=040.
External diameter d_2	55 mm	=055.
Installation length l_1	25 mm	=025
Order No		=2052.70.040.055.025

subject to alterations

Guide bush, Bronze with solid lubricant

2052.70.

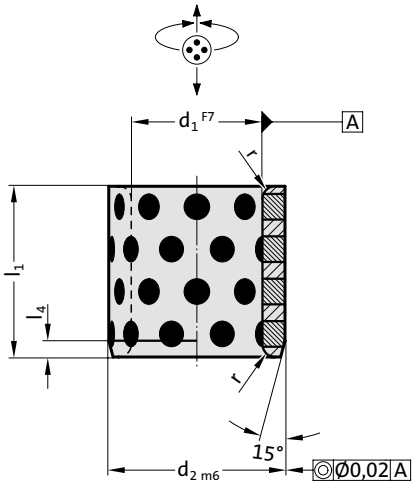



Material:
Bronze with solid lubricant, oilless lubricating

Note:
Bushes can be used with radial or axial motion.
Matching guide combinations, see selection matrix at the beginning of chapter D.
Assembly guide lines / Dimensional requirements and tolerances at the end of chapter D.

Attention:
Note that press fitment reduces inside bush diameter.

2052.70. Guide bush, Bronze with solid lubricant

d_1	45	45	45	50	50	50	55	60	60	63	65	70	70	75	75	80	80	85	90	100	110	120	125	130	140	150	160
d_2	55	56	60	60	62	65	70	74	75	75	80	85	90	90	95	96	100	100	110	120	130	140	145	150	160	170	180
r	1.5	1.5	1.5	1.5	1.5	1.5	2	2	2	2	2	2	2	2	2	2	2	2	2	2	2	2	2	2	2	2	2
l_4	4	4	4	4	4	4	4	4	4	4	4	4	4	4	4	4	4	4	4	4	4	4	4	4	4	4	4
l_1																											
30	●	●	●	●	●	●		●	●																		
35	●	●	●	●	●			●	●			●															
40	●	●	●	●	●	●	●	●	●			●				●	●										
50	●	●	●	●	●	●	●	●	●		●	●	●			●	●										
60	●	●	●	●	●	●	●	●	●	●	●	●	●	●	●	●	●		●	●							
70			●	●	●	●	●	●	●	●	●	●	●	●	●	●	●		●	●							
80			●	●		●		●	●	●	●	●	●	●	●	●	●	●	●	●	●	●					
95				●																							
100						●			●			●		●	●	●	●		●	●	●	●	●	●	●	●	●
120										●						●	●		●	●	●	●	●	●			
130																								●			
140																	●			●		●			●		
150																										●	●

Ordering Code (example):

Guide bush, Bronze with solid lubricant		=2052.70.
Guide diameter d_1	40 mm	=040.
External diameter d_2	55 mm	=055.
Installation length l_1	25 mm	=025
Order No		=2052.70.040.055.025

Guide bush with collar, Bronze with solid lubricant



2085.70.

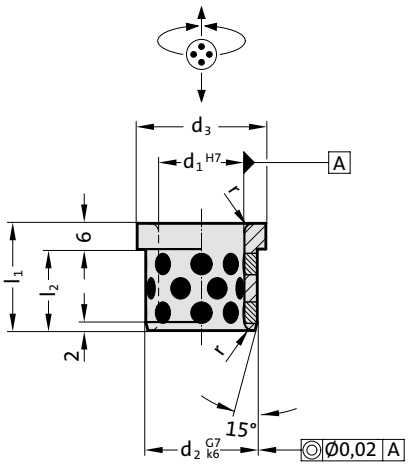

Material:

Bronze with solid lubricant, oilless lubricating

Note:

Bushes can be used with radial or axial motion.
Bushes can also be fitted with Loctite.

Matching guide combinations, see selection matrix at the beginning of chapter D.
Assembly guide lines / Dimensional requirements and tolerances at the end of chapter D.

2085.70. Guide bush with collar, Bronze with solid lubricant

d_1	12	16	20	24
d_2	16	20	26	30
d_3	18	24	28	35
r	2	2	2	4
l_1 l_2				
20 14	●	●	●	●
25 19	●	●	●	●
30 24	●	●	●	●

Ordering Code (example):

Guide bush with collar, Bronze with solid lubricant	=2085.70.	
Guide diameter d_1	20 mm=	020.
Length l_1	20 mm=	020
Order No	=2085.70.020.020	

subject to alterations

Guide bush with collar, Bronze with solid lubricant

2085.71.

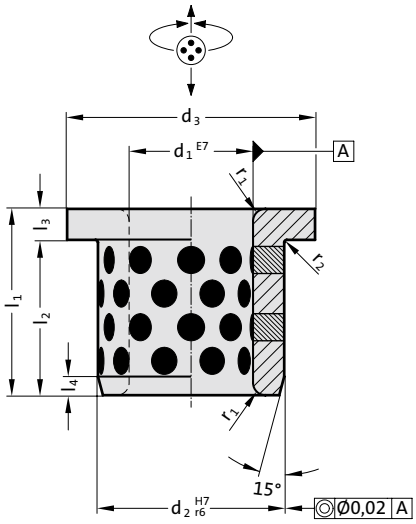



Material:
Bronze with solid lubricant, oilless lubricating

Note:
Bushes can be used with radial or axial motion.
Matching guide combinations, see selection matrix at the beginning of chapter D.
Assembly guide lines / Dimensional requirements and tolerances at the end of chapter D.

Attention:
Note that press fitment reduces inside bush diameter.

2085.71. Guide bush with collar, Bronze with solid lubricant

d_1	10	12	13	14	15	16	20	25	30	31.5	35	40	45	50	55	60	63	70	75	80	90	100	120
d_2	14	18	19	20	21	22	30	35	40	40	45	50	55	60	65	75	75	85	90	100	110	120	140
d_3	22	25	26	27	28	29	40	45	50	50	60	65	70	75	80	90	85	105	110	120	130	150	170
l_3	2	3	3	3	3	3	5	5	5	5	5	5	5	5	5	7.5	7.5	7.5	7.5	10	10	10	10
l_4	2	2	2	2	2	2	3	3	3	3	3	3	3	3	3	4	4	4	4	4	4	4	4
r_1	1	1	1	1	1	1	2	2	2	2	2	2	2	2	2	3	3	3	3	3	3	3	3
r_2	0.4	0.4	0.4	0.4	0.5	0.5	0.5	0.5	0.5	0.6	0.6	0.6	0.6	0.6	0.7	0.7	0.7	0.7	0.7	0.8	0.8	0.8	0.8
l_1	l_2																						
15	13	12	12	12	12	12	10	10															
20	18	17	17	17	17	17	15	15	15	15	15	15											
25					22	22	20	20	20														
30					27	27	25	25	25		25	25	25	25									
35									30	30													
40							35	35	35		35	35	35	35	35	32.5							
50									45		45	45	45	45		42.5		42.5					
60													55	55	55				52.5	50	50		
67.5																	60						
80																72.5		72.5		70	70	70	70
100																				90		90	90

Ordering Code (example):

Guide bush with collar, Bronze with solid lubricant		=2085.71.
Guide diameter d_1	35 mm=	035.
Length l_1	20 mm=	020
Order No		=2085.71.035.020

Guide bush with collar, Bronze with solid lubricant



2086.70.

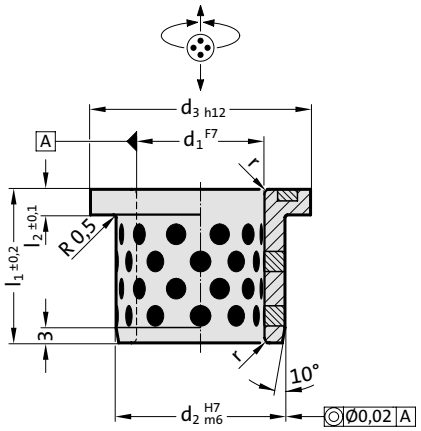

Material:
Bronze with solid lubricant, oilless lubricating

Note:
Bushes can be used with radial or axial motion.
Matching guide combinations, see selection matrix at the beginning of chapter D.
Assembly guide lines / Dimensional requirements and tolerances at the end of chapter D.

Attention:
Note that press fitment reduces inside bush diameter.

2086.70. Guide bush with collar, Bronze with solid lubricant

d_1	12	16	20	25	30	40	50	60
d_2	18	22	28	33	38	50	62	75
d_3	25	30	36	43	48	60	75	90
r	1	1	1	1	1	2	2	3
l_1	15	20	25	30	35	45	55	65
l_2	4	5	5	5	5	5	6	7

Ordering Code (example):

Guide bush with collar, Bronze with solid lubricant		=2086.70.
Guide diameter d_1	30 mm=	030.
Total length l_1	35 mm=	035
Order No		=2086.70.030.035

subject to alterations

Guide bush with collar, Bronze with solid lubricant

2085.72.

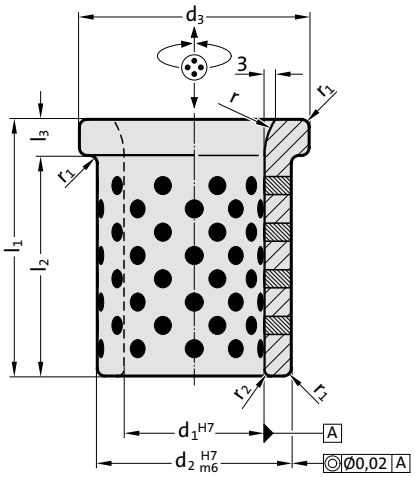



Material:
Bronze with solid lubricant, oilless lubricating

Note:
Bushes can be used with radial or axial motion.
Matching guide combinations, see selection matrix at the beginning of chapter D.
Assembly guide lines / Dimensional requirements and tolerances at the end of chapter D.

Attention:
Note that press fitment reduces inside bush diameter.

2085.72. Guide bush with collar, Bronze with solid lubricant

d_1	25	30	40	50	60	65	65	80	80	100	100
d_2	35	40	55	65	75	80	80	100	100	120	120
d_3	45	50	65	75	85	90	90	110	110	130	130
r	10	20	20	20	20	20	20	20	20	20	20
r_1	1	1	2	2	2	2	2	2	2	2	2
r_2	2	2	2	2	2	2	2	2	2	3	3
l_3	7	10	10	10	10	10	10	10	10	10	10
l_2	33	40	60	70	70	70	110	90	130	90	130
l_1	40	50	70	80	80	80	120	100	140	100	140

Ordering Code (example):

Guide bush with collar, Bronze with solid lubricant		=2085.72.
Guide diameter d_1	60 mm=	060.
Length l_1	80 mm=	080
Order No		=2085.72.060.080

FIBRO

Guide bush with collar, Bronze with solid lubricant, DIN 9834/ISO 9448



2082.70.

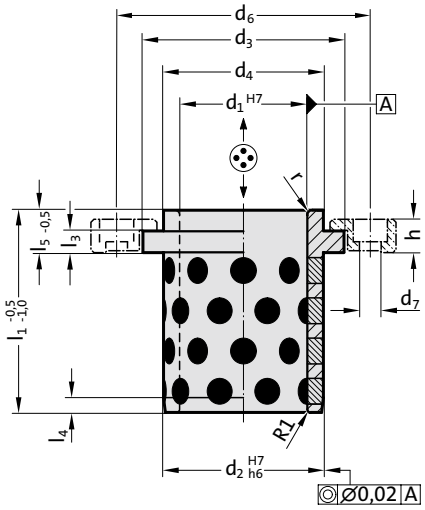

Material:

Bronze with solid lubricant, oilless lubricating

Note:

Matching guide combinations, see selection matrix at the beginning of chapter D.
Assembly guide lines / Dimensional requirements and tolerances at the end of chapter D.

Fixing:

(to be ordered separately)
Screw clamps with screws,
up to Ø d_1 = 50 - 2072.45.10 (M6 X 16 DIN EN ISO 4762)
from Ø d_1 = 60 - 2072.45.16 (M10 X 20 DIN EN ISO 4762)

Attention:

Bushes can only be used with axial motion!

2082.70. Guide bush with collar, Bronze with solid lubricant, DIN 9834/ISO 9448

d_1	24 25	30 32	38 40	48 50	60 63	80	100	125	160
d_2	32	40	50	63	80	100	125	160	200
d_3	40	50	63	71	90	112	140	180	220
d_4	32	40	50	63	80	100	125	160	200
d_6	58	66	79	89	123	143	168	203	243
d_7	7	7	7	7	11.5	11.5	11.5	11.5	11.5
l_1	40	50	63	71	80	100	125	160	200
l_3	6.3	6.3	6.3	6.3	10	10	10	10	10
l_4	3	4	5	6.3	8	10	12.5	16	16
l_5	10	12	15	17	19	22	21	30	32
h	10	10	10	10	16	16	16	16	16
r	3	3	3	5	6	8	10	12	18

Ordering Code (example):

Guide bush with collar, Bronze with solid lubricant, DIN 9834/ISO 9448		=2082.70.
Guide diameter d_1	50 mm=	050
Order No		=2082.70.050

subject to alterations

Guide bush with collar, Bronze with solid lubricant, NAAMS

2082.71.

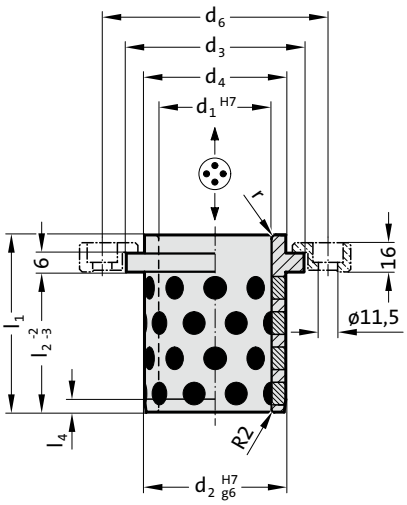



Material:
Bronze with solid lubricant, oilless lubricating

Note:
Matching guide combinations, see selection matrix at the beginning of chapter D.
Assembly guide lines / Dimensional requirements and tolerances at the end of chapter D.

Fixing:
(to be ordered separately)
Screw clamps with screws 2072.46 (M10 x 20 DIN EN ISO 4762)

Attention:
Bushes can only be used with axial motion!

2082.71. Guide bush with collar, Bronze with solid lubricant, NAAMS

d_1	25	32	40	50	63	80	100	125
d_2	32	40	50	63	80	100	125	160
d_3	40	50	63	71	90	112	140	180
d_4	32	40	50	63	80	100	125	160
d_6	75	83	93	106	123	143	168	203
l_1	40	50	63	71	80	100	125	160
l_2	30	40	50	56	63	80	106	132
l_4	3	4	5	6.3	8	10	12.5	16
r	3	3	3	5	6	8	10	12

Ordering Code (example):

Guide bush with collar, Bronze with solid lubricant, NAAMS		=2082.71.
Guide diameter d_1	63 mm	= 063
Order No		=2082.71. 063

FIBRO

Guide bush with collar, Bronze with solid lubricant, NAAMS



2086.71.

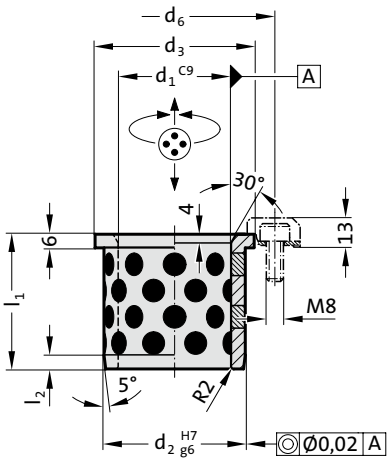

Material:

Bronze with solid lubricant, oilless lubricating

Note:

Bushes can be used with radial or axial motion.
Matching guide combinations, see selection matrix at the beginning of chapter D.
Assembly guide lines / Dimensional requirements and tolerances at the end of chapter D.

Fixing:

(to be ordered separately)
Screw clamps with screws 2072.47 (M8 x 20 DIN EN ISO 4762)

2086.71. Guide bush with collar, Bronze with solid lubricant, NAAMS

d_1	25	32	40	50	63	80	100	125
d_2	32	40	50	63	80	100	125	160
d_3	40	50	63	71	90	112	140	180
d_6	29	34	40.5	44.5	54	65	79	99
l_1	40	50	55	63	75	90	115	138
l_2	4	4	5	6	8	10	12	12

Ordering Code (example):

Guide bush with collar, Bronze with solid lubricant, NAAMS		=2086.71.	
Guide diameter d_1	63 mm	=	063
Order No		=2086.71.	063

Guide bush with collar, Bronze with solid lubricant, CNOMO

2102.70.

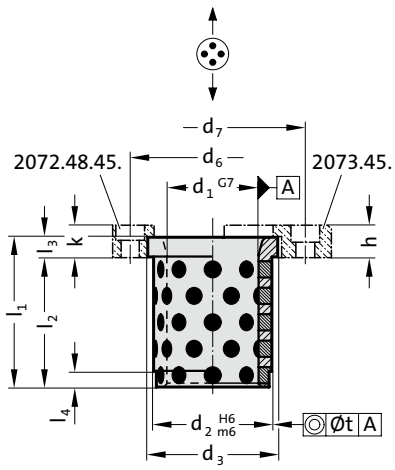



Material:
Bronze with solid lubricant, oilless lubricating

Note:
Matching guide combinations, see selection matrix at the beginning of chapter D.
Assembly guide lines / Dimensional requirements and tolerances at the end of chapter D.

Fixing:
(to be ordered separately)
Screw clamps with screws 2072.48.45. or
Securing flange 2073.45.

Attention:
Bushes can only be used with axial motion!
Note that press fitment reduces inside bush diameter.

2102.70. Guide bush with collar, Bronze with solid lubricant, CNOMO

d_1	20	25	32	40	50	63	80	100
d_2	28	35	44	52	63	80	100	125
d_3	32	40	50	60	71	90	112	140
d_6	-	-	-	75	90	111	133	162
d_7	48	56	65	82	98	115	144	170
l_1	32	40	50	63	80	100	125	160
l_2	28	35	44	55	70	88	109	140
l_3	4	5	6	8	10	12	16	20
l_4	3	5	8	8	8	10	10	10
h	10	10	12	12	16	20	25	32
k	-	-	-	12	16	20	25	32
t	0.01	0.01	0.01	0.02	0.02	0.02	0.02	0.02

Ordering Code (example):

Guide bush with collar, Bronze with solid lubricant, CNOMO		=2102.70.
Guide diameter d_1	50 mm	= 050
Order No		=2102.70. 050

FIBRO

Guide bush with collar, Bronze, CNOMO



2102.71.

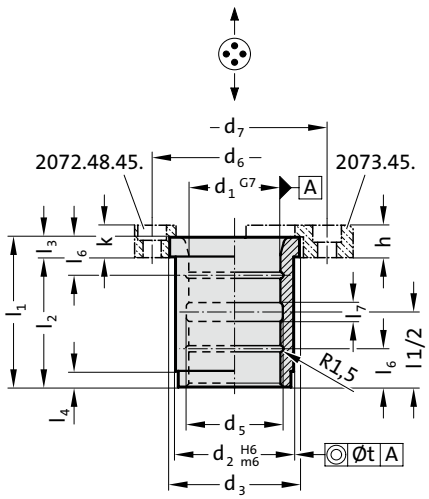

Material:
Bronze

Note:
Matching guide combinations, see selection matrix at the beginning of chapter D.
Assembly guide lines / Dimensional requirements and tolerances at the end of chapter D.

Fixing:
(to be ordered separately)
Screw clamps with screws 2072.48.45. or
Securing flange 2073.45.

Attention:
Bushes can only be used with axial motion!
Note that press fitment reduces inside bush diameter.

2102.71. Guide bush with collar, Bronze, CNOMO

d_1	20	25	32	40	50	63	80	100
d_2	28	35	44	52	63	80	100	125
d_3	32	40	50	60	71	90	112	140
d_5	22	27	34	42	52	65	82	102
d_6	-	-	-	75	90	111	133	162
d_7	48	56	65	82	98	115	144	170
l_1	32	40	50	63	80	100	125	160
l_2	28	35	44	55	70	88	109	140
l_3	4	5	6	8	10	12	16	20
l_4	3	5	8	8	8	10	10	10
l_6	-	-	12	16	20	25	32	40
l_7	5	5	5	8	10	12	16	20
h	10	10	12	12	16	20	25	32
k	-	-	-	12	16	20	25	32
t	0.01	0.01	0.01	0.02	0.02	0.02	0.02	0.02

Ordering Code (example):

Guide bush with collar, Bronze, CNOMO		=2102.71.
Guide diameter d_1	50 mm =	050
Order No		=2102.71. 050

Flat guide bar, Bronze with solid lubricant

2961.71.

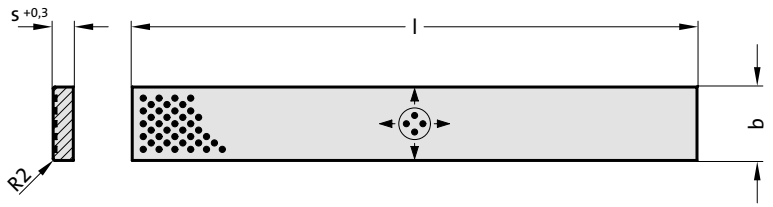



2961.71. Flat guide bar, Bronze with solid lubricant

Order No	b	s	l	l	l
			305	605	1005
2961.71.020.004.0305	20	4	●		
2961.71.025.005.0305	25	5	●		
2961.71.030.004.0305	30	4	●		
2961.71.030.006.0305	30	6	●	●	
2961.71.030.008.0305	30	8	●	●	
2961.71.030.010.0305	30	10	●	●	●
2961.71.030.012.0305	30	12	●	●	●
2961.71.035.010.0305	35	10	●	●	●
2961.71.040.005.0305	40	5	●	●	
2961.71.040.006.0305	40	6	●	●	
2961.71.040.008.0305	40	8	●	●	●
2961.71.040.010.0305	40	10	●	●	●
2961.71.040.012.0605	40	12		●	●
2961.71.040.016.0605	40	16		●	●
2961.71.050.010.0305	50	10	●	●	●
2961.71.050.012.0605	50	12		●	●
2961.71.050.020.0605	50	20		●	●
2961.71.060.012.0605	60	12		●	●
2961.71.060.016.0605	60	16		●	●
2961.71.080.010.0305	80	10	●	●	●
2961.71.080.012.0605	80	12		●	●
2961.71.080.016.0605	80	16		●	●
2961.71.080.020.0605	80	20		●	●
2961.71.080.025.0605	80	25		●	●
2961.71.100.016.0605	100	16		●	●
2961.71.100.020.0605	100	20		●	●
2961.71.100.025.0605	100	25		●	●
2961.71.125.020.0605	125	20		●	●
2961.71.125.025.0605	125	25		●	●
2961.71.160.025.0605	160	25		●	●

Material:

Bronze with solid lubricant, oilless lubricating

Execution:

Sliding faces ground.

Ordering Code (example):

Flat guide bar, Bronze with solid lubricant		=2961.71.			
Width b	50 mm	=	050.		
Thickness s	10 mm	=		010.	
Length l	1005 mm	=			1005
Order No		=2961.71.	050.	010.	1005

Flat guide bar, Bronze with solid lubricant



2961.76.

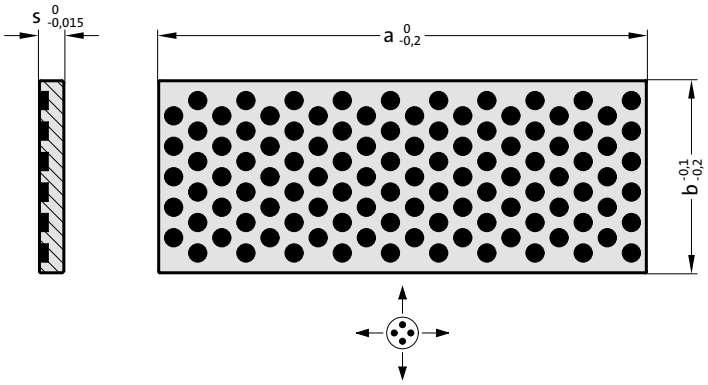

Material:
Bronze with solid lubricant, oilless lubricating

Execution:
Sliding faces ground.

2961.76. Flat guide bar, Bronze with solid lubricant

Order No	b	s	a
2961.76.025.005.050	25	5	50
2961.76.025.005.071	25	5	71
2961.76.025.005.090	25	5	90
2961.76.025.006.050	25	6	50
2961.76.025.006.063	25	6	63
2961.76.025.006.080	25	6	80
2961.76.025.006.100	25	6	100
2961.76.025.006.125	25	6	125
2961.76.040.005.050	40	5	50
2961.76.040.005.071	40	5	71
2961.76.040.005.090	40	5	90
2961.76.040.006.080	40	6	80
2961.76.040.006.100	40	6	100
2961.76.040.006.125	40	6	125
2961.76.040.006.160	40	6	160
2961.76.040.006.200	40	6	200
2961.76.063.006.080	63	6	80
2961.76.063.006.100	63	6	100
2961.76.063.006.125	63	6	125
2961.76.063.006.160	63	6	160
2961.76.063.008.125	63	8	125
2961.76.063.008.160	63	8	160
2961.76.063.008.200	63	8	200
2961.76.063.008.250	63	8	250
2961.76.063.008.315	63	8	315

subject to alterations

Flat guide bar, Bronze with solid lubricant

2961.77.

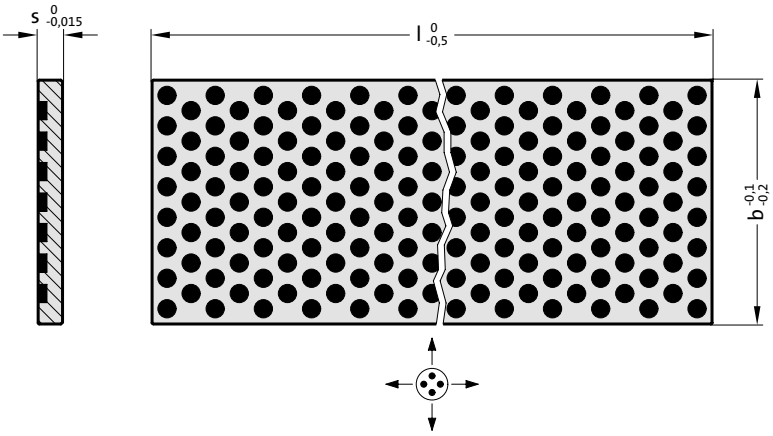



Material:
Bronze with solid lubricant, oilless lubricating

Execution:
Sliding faces ground.

2961.77. Flat guide bar, Bronze with solid lubricant

Order No	b	s	l
2961.77.025.006.500	25	6	500
2961.77.040.006.500	40	6	500
2961.77.063.008.500	63	8	500
2961.77.080.010.500	80	10	500

Flat guide bar with two sliding surfaces, Bronze with solid lubricant



2961.73.

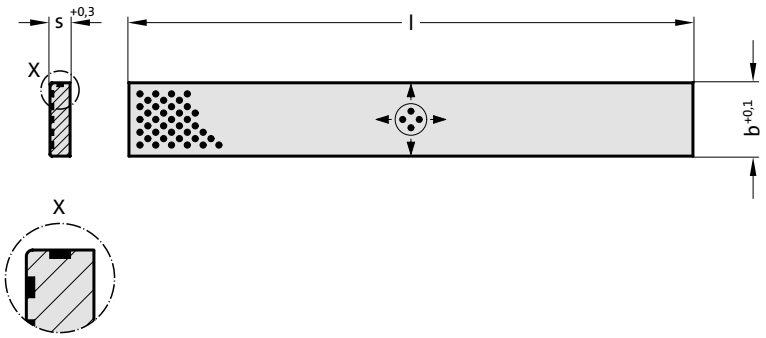

Material:
Bronze with solid lubricant, oilless lubricating

Execution:
Sliding faces ground.

2961.73. Flat guide bar with two sliding surfaces, Bronze with solid lubricant

Order No	b	s	l	l
			305	605
2961.73.025.005.0305	25	5	●	
2961.73.030.006.0305	30	6	●	
2961.73.035.010.0605	35	10		●
2961.73.040.008.0605	40	8		●
2961.73.040.012.0605	40	12		●
2961.73.050.010.0605	50	10		●
2961.73.060.016.0605	60	16		●
2961.73.080.012.0605	80	12		●
2961.73.080.020.0605	80	20		●
2961.73.100.020.0605	100	20		●

subject to alterations

Flat guide bar, Bronze with solid lubricant

2961.70.

A

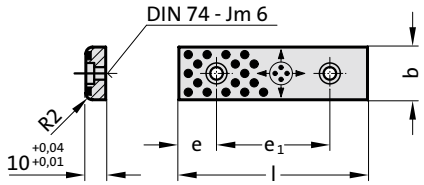

F

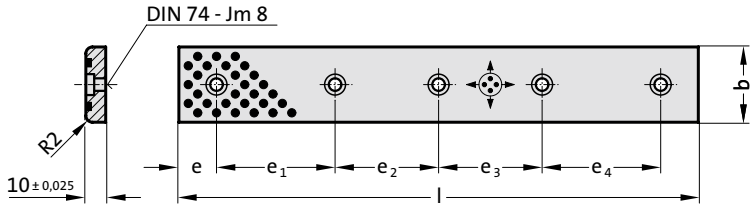

E

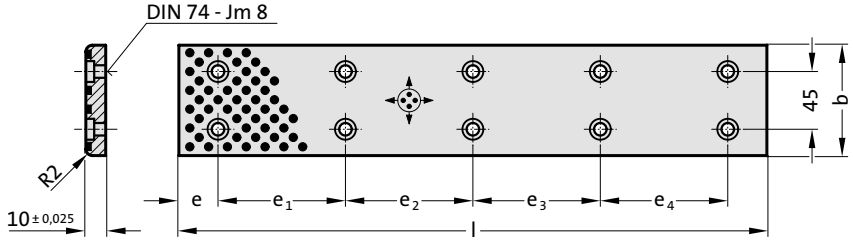



Material:
Bronze with solid lubricant, oilless lubricating

Execution:
Sliding faces ground.

Note:
Screws not included.

Fixing:
Use socket cap screws DIN 7984.

2961.70. Flat guide bar, Bronze with solid lubricant

Order No	Shape	b	l	e	e_1	e_2	e_3	e_4	Number of screw holes
2961.70.018.075	A	18	75	15	45	-	-	-	2
2961.70.018.100	A	18	100	25	50	-	-	-	2
2961.70.018.125	A	18	125	25	75	-	-	-	2
2961.70.018.150	A	18	150	25	100	-	-	-	2
2961.70.028.075	A	28	75	15	45	-	-	-	2
2961.70.028.100	A	28	100	25	50	-	-	-	2
2961.70.028.125	A	28	125	25	75	-	-	-	2
2961.70.028.150	A	28	150	25	100	-	-	-	2
2961.70.035.100	F	35	100	20	60	-	-	-	2
2961.70.035.150	F	35	150	20	55	55	-	-	3
2961.70.035.200	F	35	200	20	55	50	55	-	4
2961.70.035.250	F	35	250	20	70	70	70	-	4
2961.70.035.300	F	35	300	20	65	65	65	65	5
2961.70.035.350	F	35	350	20	80	75	75	80	5
2961.70.038.075	A	38	75	15	45	-	-	-	2
2961.70.038.100	A	38	100	25	50	-	-	-	2
2961.70.038.125	A	38	125	25	75	-	-	-	2
2961.70.038.150	A	38	150	25	100	-	-	-	2
2961.70.048.075	A	48	75	15	45	-	-	-	2
2961.70.048.100	A	48	100	25	50	-	-	-	2
2961.70.048.125	A	48	125	25	75	-	-	-	2
2961.70.048.150	A	48	150	25	100	-	-	-	2
2961.70.050.100	F	50	100	20	60	-	-	-	2
2961.70.050.150	F	50	150	20	55	55	-	-	3
2961.70.050.200	F	50	200	20	55	50	55	-	4
2961.70.050.250	F	50	250	20	70	70	70	-	4
2961.70.050.300	F	50	300	20	65	65	65	65	5
2961.70.050.350	F	50	350	20	80	75	75	80	5
2961.70.050.400	F	50	400	20	90	90	90	90	5
2961.70.075.150	E	75	150	20	110	-	-	-	4
2961.70.075.200	E	75	200	20	80	80	-	-	6
2961.70.075.250	E	75	250	20	105	105	-	-	6
2961.70.075.300	E	75	300	20	85	90	85	-	8
2961.70.075.400	E	75	400	20	120	120	120	-	8
2961.70.075.500	E	75	500	20	115	115	115	115	10

Flat guide bar, Bronze with solid lubricant



2961.75.

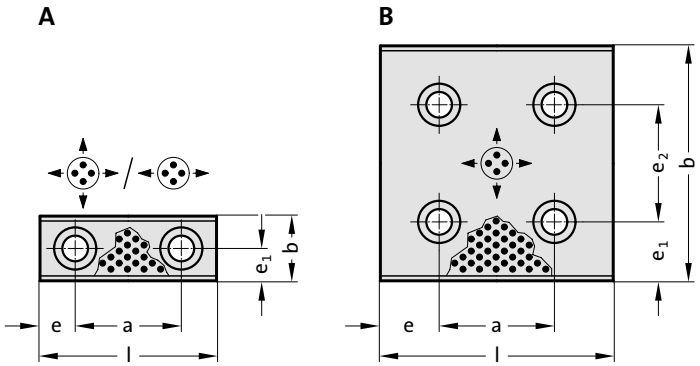

2961.75.

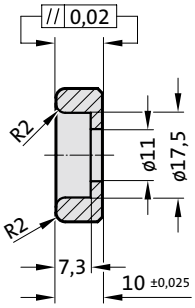

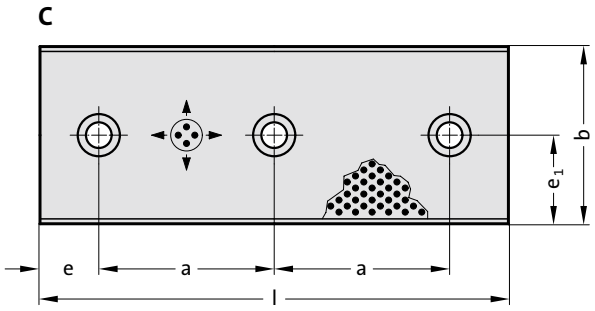

Material:
Bronze with solid lubricant, oilless lubricating

Note:
Screws not included.

Attention:
Direction of motion of flat guide bars with a width of b = 28 and 38 mm only in longitudinal direction.

Fixing:
Use socket cap screws DIN 7984 M10.

2961.75. Flat guide bar, Bronze with solid lubricant

Order No	Shape	b	l	e	a	e_1	e_2	Number of screw holes
2961.75.028.075	A	28	75	15	45	14	-	2
2961.75.028.100	A	28	100	25	50	14	-	2
2961.75.028.125	A	28	125	25	75	14	-	2
2961.75.028.150	A	28	150	25	100	14	-	2
2961.75.038.075	A	38	75	15	45	19	-	2
2961.75.038.100	A	38	100	25	50	19	-	2
2961.75.038.125	A	38	125	25	75	19	-	2
2961.75.038.150	A	38	150	25	100	19	-	2
2961.75.048.075	A	48	75	15	45	24	-	2
2961.75.048.100	A	48	100	25	50	24	-	2
2961.75.048.125	A	48	125	25	75	24	-	2
2961.75.048.150	A	48	150	25	100	24	-	2
2961.75.048.200	A	48	200	50	100	24	-	2
2961.75.058.075	A	58	75	15	45	29	-	2
2961.75.058.100	A	58	100	25	50	29	-	2
2961.75.058.125	A	58	125	25	75	29	-	2
2961.75.058.150	A	58	150	25	100	29	-	2
2961.75.058.200	A	58	200	50	100	29	-	2
2961.75.075.075	A	75	75	15	45	37.5	-	2
2961.75.075.100	A	75	100	25	50	37.5	-	2
2961.75.075.125	A	75	125	25	75	37.5	-	2
2961.75.075.150	A	75	150	25	100	37.5	-	2
2961.75.075.200	C	75	200	25	75	37.5	-	3
2961.75.100.100	B	100	100	25	50	25	50	4
2961.75.100.125	B	100	125	25	75	25	50	4
2961.75.100.150	B	100	150	25	100	25	50	4
2961.75.100.200	B	100	200	25	150	25	50	4
2961.75.100.250	B	100	250	25	200	25	50	4
2961.75.125.150	B	125	150	25	100	37.5	50	4
2961.75.125.200	B	125	200	25	150	37.5	50	4
2961.75.125.250	B	125	250	25	200	37.5	50	4
2961.75.150.150	B	150	150	25	100	25	100	4
2961.75.150.200	B	150	200	25	150	25	100	4

subject to alterations

Retaining plate, Bronze with solid lubricant, VDI 3357

2961.74.

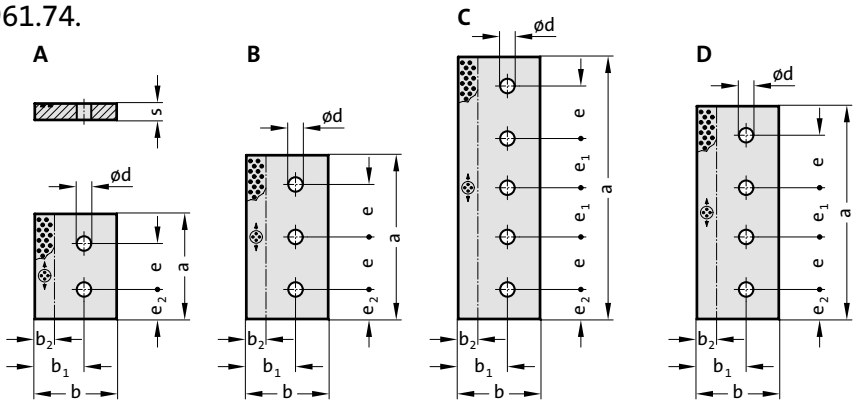



2961.74. Retaining plate, Bronze with solid lubricant, VDI 3357

Order No	Shape	b	s	a	b_2	b_1	d	e	e_1	e_2	Number of screw holes
2961.74.035.10.160	A	35	10	160	10	20	11	70	-	45	2
2961.74.035.10.200	A	35	10	200	10	20	11	110	-	45	2
2961.74.035.10.250	B	35	10	250	10	20	11	80	-	45	3
2961.74.045.15.160	A	45	15	160	15	30	13.5	70	-	45	2
2961.74.045.15.200	A	45	15	200	15	30	13.5	110	-	45	2
2961.74.045.15.250	B	45	15	250	15	30	13.5	80	-	45	3
2961.74.055.15.160	A	55	15	160	20	35	17.5	70	-	45	2
2961.74.055.15.200	A	55	15	200	20	35	17.5	110	-	45	2
2961.74.055.15.250	B	55	15	250	20	35	17.5	80	-	45	3
2961.74.075.25.160	A	75	25	160	25	40	17.5	70	-	45	2
2961.74.075.25.200	A	75	25	200	25	40	17.5	110	-	45	2
2961.74.075.25.250	B	75	25	250	25	40	17.5	80	-	45	3
2961.74.085.28.240	B	85	28	240	30	60	22	95	-	25	3
2961.74.085.28.300	D	85	28	300	30	60	22	85	80	25	4
2961.74.085.28.350	D	85	28	350	30	60	22	100	100	25	4
2961.74.085.28.400	D	85	28	400	30	60	22	115	120	25	4
2961.74.085.28.450	C	85	28	450	30	60	22	100	100	25	5
2961.74.085.30.160	A	85	30	160	30	60	22	70	-	45	2
2961.74.085.30.200	A	85	30	200	30	60	22	110	-	45	2
2961.74.085.30.250	B	85	30	250	30	60	22	80	-	45	3
2961.74.085.30.300	B	85	30	300	30	60	22	105	-	45	3
2961.74.085.30.350	B	85	30	350	30	60	22	130	-	45	3
2961.74.085.30.400	C	85	30	400	30	60	22	80	75	45	5
2961.74.100.25.160	A	100	25	160	30	60	17.5	70	-	45	2
2961.74.100.25.200	A	100	25	200	30	60	17.5	110	-	45	2
2961.74.100.25.250	B	100	25	250	30	60	17.5	80	-	45	3
2961.74.100.25.400	C	100	25	400	30	60	17.5	80	75	45	5
2961.74.100.30.160	A	100	30	160	30	60	22	70	-	45	2
2961.74.100.30.200	A	100	30	200	30	60	22	110	-	45	2
2961.74.100.30.250	B	100	30	250	30	60	22	80	-	45	3
2961.74.100.30.400	C	100	30	400	30	60	22	80	75	45	5
2961.74.125.25.160	A	125	25	160	30	75	17.5	70	-	45	2
2961.74.125.25.200	A	125	25	200	30	75	17.5	110	-	45	2
2961.74.125.25.250	B	125	25	250	30	75	17.5	80	-	45	3
2961.74.125.25.300	D	125	25	300	30	80	26	85	80	25	4
2961.74.125.25.350	D	125	25	350	30	80	26	100	100	25	4
2961.74.125.25.400.1	D	125	25	400	30	80	26	115	120	25	4
2961.74.125.25.400	C	125	25	400	30	75	17.5	80	75	45	5
2961.74.125.25.450	C	125	25	450	30	80	26	100	100	25	5
2961.74.125.25.500	C	125	25	500	30	80	26	110	115	25	5
2961.74.125.30.160	A	125	30	160	30	75	22	70	-	45	2
2961.74.125.30.200	A	125	30	200	30	75	22	110	-	45	2
2961.74.125.30.250	B	125	30	250	30	75	22	80	-	45	3
2961.74.125.30.300	B	125	30	300	30	75	22	105	-	45	3
2961.74.125.30.350	B	125	30	350	30	75	22	130	-	45	3
2961.74.125.30.400	C	125	30	400	30	75	22	80	75	45	5
2961.74.125.30.450	C	125	30	450	30	75	22	80	95	50	5
2961.74.125.30.500	C	125	30	500	30	75	22	80	120	50	5

Mounting example

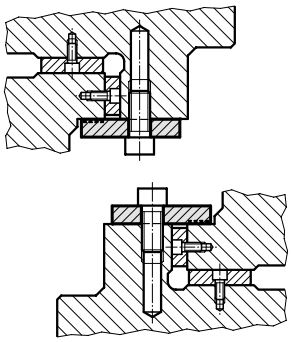

Material:

Bronze with solid lubricant, oilless lubricating

Note:

Screws not included.

Fixing:

Use socket cap screws DIN EN ISO 4762.

Retaining plate, Steel, VDI 3357



2961.79.

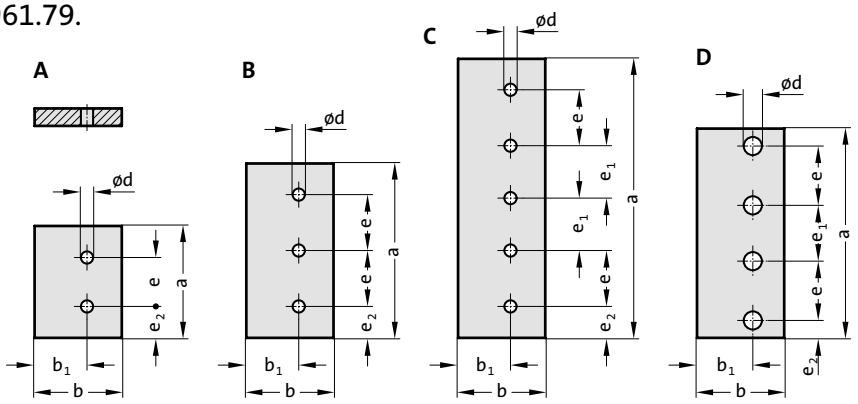

Mounting example

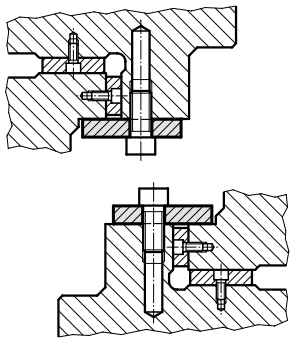

Material:
Steel, surface hardened

Note:
Screws not included.

Fixing:
Use socket cap screws DIN EN ISO 4762.

2961.79. Retaining plate, Steel, VDI 3357

Order No	Shape	b	s	a	b_1	d	e	e_1	e_2	Number of screw holes
2961.79.035.10.160	A	35	10	160	20	11	70	-	45	2
2961.79.035.10.200	A	35	10	200	20	11	110	-	45	2
2961.79.035.10.250	B	35	10	250	20	11	80	-	45	3
2961.79.045.15.160	A	45	15	160	30	13.5	70	-	45	2
2961.79.045.15.200	A	45	15	200	30	13.5	110	-	45	2
2961.79.045.15.250	B	45	15	250	30	13.5	80	-	45	3
2961.79.055.15.160	A	55	15	160	35	17.5	70	-	45	2
2961.79.055.15.200	A	55	15	200	35	17.5	110	-	45	2
2961.79.055.15.250	B	55	15	250	35	17.5	80	-	45	3
2961.79.075.25.160	A	75	25	160	40	17.5	70	-	45	2
2961.79.075.25.200	A	75	25	200	40	17.5	110	-	45	2
2961.79.075.25.250	B	75	25	250	40	17.5	80	-	45	3
2961.79.085.28.240	B	85	28	240	60	22	95	-	25	3
2961.79.085.28.300	D	85	28	300	60	22	85	80	25	4
2961.79.085.28.350	D	85	28	350	60	22	100	100	25	4
2961.79.085.28.400	D	85	28	400	60	22	115	120	25	4
2961.79.085.28.450	C	85	28	450	60	22	100	100	25	5
2961.79.085.30.160	A	85	30	160	60	22	70	-	45	2
2961.79.085.30.200	A	85	30	200	60	22	110	-	45	2
2961.79.085.30.250	B	85	30	250	60	22	80	-	45	3
2961.79.085.30.300	B	85	30	300	60	22	105	-	45	3
2961.79.085.30.350	B	85	30	350	60	22	130	-	45	3
2961.79.085.30.400	C	85	30	400	60	22	80	75	45	5
2961.79.100.25.160	A	100	25	160	60	17.5	70	-	45	2
2961.79.100.25.200	A	100	25	200	60	17.5	110	-	45	2
2961.79.100.25.250	B	100	25	250	60	17.5	80	-	45	3
2961.79.100.25.400	C	100	25	400	60	17.5	80	75	45	5
2961.79.100.30.160	A	100	30	160	60	22	70	-	45	2
2961.79.100.30.200	A	100	30	200	60	22	110	-	45	2
2961.79.100.30.250	B	100	30	250	60	22	80	-	45	3
2961.79.100.30.400	C	100	30	400	60	22	80	75	45	5
2961.79.125.25.160	A	125	25	160	75	17.5	70	-	45	2
2961.79.125.25.200	A	125	25	200	75	17.5	110	-	45	2
2961.79.125.25.250	B	125	25	250	75	17.5	80	-	45	3
2961.79.125.25.400	C	125	25	400	75	17.5	80	75	45	5
2961.79.125.25.300	D	125	25	300	80	26	85	80	25	4
2961.79.125.25.350	D	125	25	350	80	26	100	100	25	4
2961.79.125.25.400.1	D	125	25	400	80	26	115	120	25	4
2961.79.125.25.450	C	125	25	450	80	26	100	100	25	5
2961.79.125.25.500	C	125	25	500	80	26	110	115	25	5
2961.79.125.30.160	A	125	30	160	75	22	70	-	45	2
2961.79.125.30.200	A	125	30	200	75	22	110	-	45	2
2961.79.125.30.250	B	125	30	250	75	22	80	-	45	3
2961.79.125.30.300	B	125	30	300	75	22	105	-	45	3
2961.79.125.30.350	B	125	30	350	75	22	130	-	45	3
2961.79.125.30.400	C	125	30	400	75	22	80	75	45	5
2961.79.125.30.450	C	125	30	450	75	22	80	95	50	5
2961.79.125.30.500	C	125	30	500	75	22	80	120	50	5

subject to alterations

Retaining plate, Steel with solid lubricant, VDI 3357

2961.81.

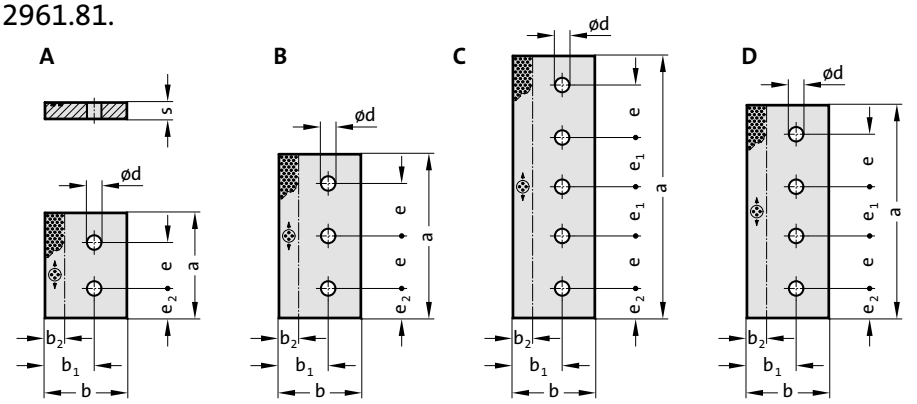



2961.81. Retaining plate, Steel with solid lubricant, VDI 3357

Order No	Shape	b	s	a	b_2	b_1	d	e	e_1	e_2	Number of screw holes
2961.81.035.10.160	A	35	10	160	10	20	11	70	-	45	2
2961.81.035.10.200	A	35	10	200	10	20	11	110	-	45	2
2961.81.035.10.250	B	35	10	250	10	20	11	80	-	45	3
2961.81.045.15.160	A	45	15	160	15	30	13.5	70	-	45	2
2961.81.045.15.200	A	45	15	200	15	30	13.5	110	-	45	2
2961.81.045.15.250	B	45	15	250	15	30	13.5	80	-	45	3
2961.81.055.15.160	A	55	15	160	20	35	17.5	70	-	45	2
2961.81.055.15.200	A	55	15	200	20	35	17.5	110	-	45	2
2961.81.055.15.250	B	55	15	250	20	35	17.5	80	-	45	3
2961.81.075.25.160	A	75	25	160	25	40	17.5	70	-	45	2
2961.81.075.25.200	A	75	25	200	25	40	17.5	110	-	45	2
2961.81.075.25.250	B	75	25	250	25	40	17.5	80	-	45	3
2961.81.085.28.240	B	85	28	240	30	60	22	95	-	25	3
2961.81.085.28.300	D	85	28	300	30	60	22	85	80	25	4
2961.81.085.28.350	D	85	28	350	30	60	22	100	100	25	4
2961.81.085.28.400	D	85	28	400	30	60	22	115	120	25	4
2961.81.085.28.450	C	85	28	450	30	60	22	100	100	25	5
2961.81.085.30.160	A	85	30	160	30	60	22	70	-	45	2
2961.81.085.30.200	A	85	30	200	30	60	22	110	-	45	2
2961.81.085.30.250	B	85	30	250	30	60	22	80	-	45	3
2961.81.085.30.300	B	85	30	300	30	60	22	105	-	45	3
2961.81.085.30.350	B	85	30	350	30	60	22	130	-	45	3
2961.81.085.30.400	C	85	30	400	30	60	22	80	75	45	5
2961.81.100.25.160	A	100	25	160	30	60	17.5	70	-	45	2
2961.81.100.25.200	A	100	25	200	30	60	17.5	110	-	45	2
2961.81.100.25.250	B	100	25	250	30	60	17.5	80	-	45	3
2961.81.100.25.400	C	100	25	400	30	60	17.5	80	75	45	5
2961.81.100.30.160	A	100	30	160	30	60	22	70	-	45	2
2961.81.100.30.200	A	100	30	200	30	60	22	110	-	45	2
2961.81.100.30.250	B	100	30	250	30	60	22	80	-	45	3
2961.81.100.30.400	C	100	30	400	30	60	22	80	75	45	5
2961.81.125.25.160	A	125	25	160	30	75	17.5	70	-	45	2
2961.81.125.25.200	A	125	25	200	30	75	17.5	110	-	45	2
2961.81.125.25.250	B	125	25	250	30	75	17.5	80	-	45	3
2961.81.125.25.300	D	125	25	300	30	80	26	85	80	25	4
2961.81.125.25.350	D	125	25	350	30	80	26	100	100	25	4
2961.81.125.25.400	C	125	25	400	30	75	17.5	80	75	45	5
2961.81.125.25.400.1	D	125	25	400	30	80	26	115	120	25	4
2961.81.125.25.450	C	125	25	450	30	80	26	100	100	25	5
2961.81.125.25.500	C	125	25	500	30	80	26	110	115	25	5
2961.81.125.30.160	A	125	30	160	30	75	22	70	-	45	2
2961.81.125.30.200	A	125	30	200	30	75	22	110	-	45	2
2961.81.125.30.250	B	125	30	250	30	75	22	80	-	45	3
2961.81.125.30.300	B	125	30	300	30	75	22	105	-	45	3
2961.81.125.30.350	B	125	30	350	30	75	22	130	-	45	3
2961.81.125.30.400	C	125	30	400	30	75	22	80	75	45	5
2961.81.125.30.450	C	125	30	450	30	75	22	80	95	50	5
2961.81.125.30.500	C	125	30	500	30	75	22	80	120	50	5

Mounting example

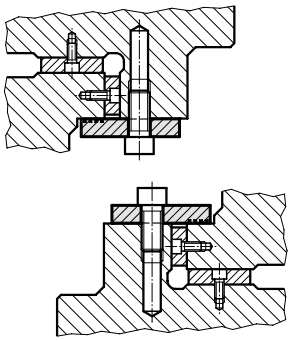

Material:

Steel, surface hardened. Sliding faces with embedded solid lubricant.

Note:

Screws not included.

Fixing:

Use socket cap screws DIN EN ISO 4762.

Retaining plate, Bronze with solid lubricant



Mounting example

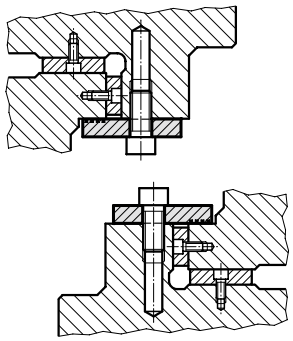

2961.78.

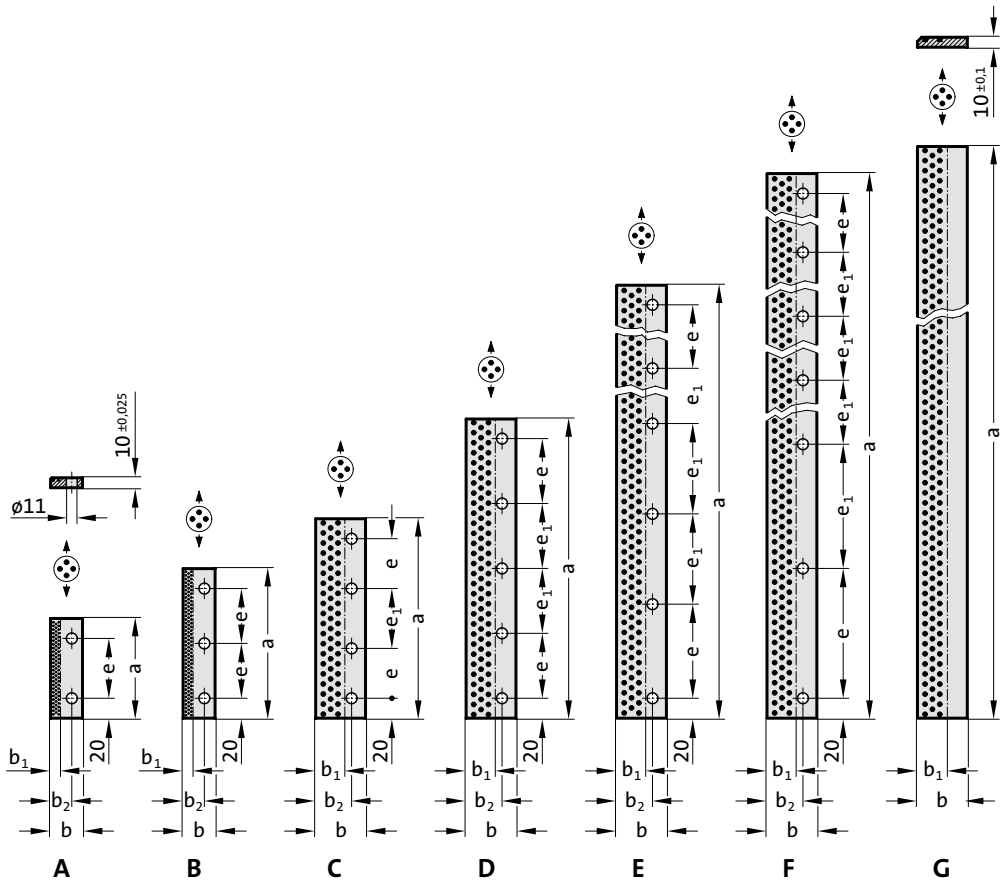

Material:
Bronze with solid lubricant, oilless lubricating

Note:
Screws not included.

Fixing:
Use socket cap screws DIN EN ISO 4762 M10.

2961.78. Retaining plate, Bronze with solid lubricant

Order No	Shape	a	b	b_1	b_2	e	e_1	Number of screw holes
2961.78.032.0100	A	100	32	10	21	60	-	2
2961.78.032.0150	B	150	32	10	21	55	-	3
2961.78.032.0160	B	160	32	10	21	60	-	3
2961.78.050.0200	C	200	50	30	36	50	60	4
2961.78.050.0250	C	250	50	30	36	70	70	4
2961.78.050.0300	D	300	50	30	36	65	65	5
2961.78.050.0350	D	350	50	30	36	80	75	5
2961.78.050.0400	D	400	50	30	36	90	90	5
2961.78.050.0500	E	500	50	30	36	95	90	6
2961.78.050.0600	E	600	50	30	36	115	110	6
2961.78.050.0800	F	800	50	30	36	130	125	7
2961.78.050.0605	G	605	50	30	36	-	-	-
2961.78.050.1005	G	1005	50	30	36	-	-	-

subject to alterations

FIBRO

Retaining plate, Steel with solid lubricant



2961.82.

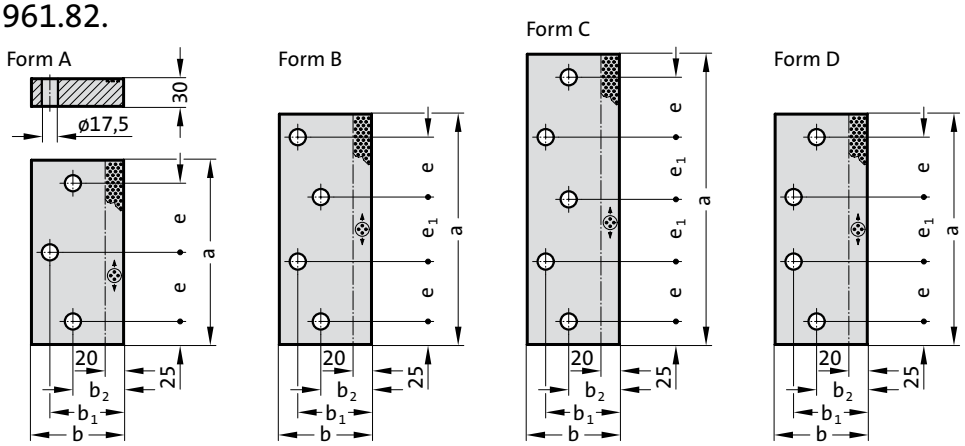

Mounting example

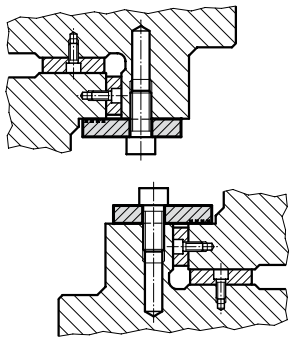

Material:

Steel, surface hardened. Sliding faces with embedded solid lubricant.

Note:

Screws not included.

Fixing:

Use socket cap screws
DIN EN ISO 4762 M16 x 50.

2961.82. Retaining plate, Steel with solid lubricant

Order No	Shape	b	a	b_1	b_2	e	e_1	Number of screw holes
2961.82.075.200	A	75	200	55	40	75	-	3
2961.82.075.250	B	75	250	55	40	65	70	4
2961.82.075.250.1	D	75	250	55	40	65	70	4
2961.82.075.250.2	A	75	250	55	40	100	-	3
2961.82.075.315	C	75	315	55	40	65	67.5	5
2961.82.075.350	C	75	350	55	40	75	75	5
2961.82.075.400	C	75	400	55	40	90	85	5
2961.82.075.450	C	75	450	55	40	100	100	5
2961.82.100.200	A	100	200	80	55	75	-	3
2961.82.100.250	B	100	250	80	55	65	70	4
2961.82.100.250.1	D	100	250	80	55	65	70	4
2961.82.100.250.2	A	100	250	80	55	100	-	3
2961.82.100.315	C	100	315	80	55	65	67.5	5
2961.82.100.350	C	100	350	80	55	75	75	5
2961.82.100.400	C	100	400	80	55	90	85	5
2961.82.100.450	C	100	450	80	55	100	100	5
2961.82.125.200	A	125	200	105	65	75	-	3
2961.82.125.250	B	125	250	105	65	65	70	4
2961.82.125.250.1	D	125	250	105	65	65	70	4
2961.82.125.250.2	A	125	250	105	65	100	-	3
2961.82.125.315	C	125	315	105	65	65	67.5	5
2961.82.125.350	C	125	350	105	65	75	75	5
2961.82.125.400	C	125	400	105	65	90	85	5
2961.82.125.450	C	125	450	105	65	100	100	5
2961.82.150.200	A	150	200	130	65	75	-	3
2961.82.150.250	B	150	250	130	65	65	70	4
2961.82.150.250.1	D	150	250	130	65	65	70	4
2961.82.150.250.2	A	150	250	130	65	100	-	3
2961.82.150.315	C	150	315	130	65	65	67.5	5
2961.82.150.350	C	150	350	130	65	75	75	5
2961.82.150.400	C	150	400	130	65	90	85	5
2961.82.150.450	C	150	450	130	65	100	100	5

Retaining plate, Steel, CNOMO



Mounting example

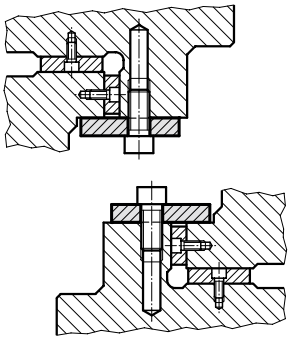

2961.79.45.

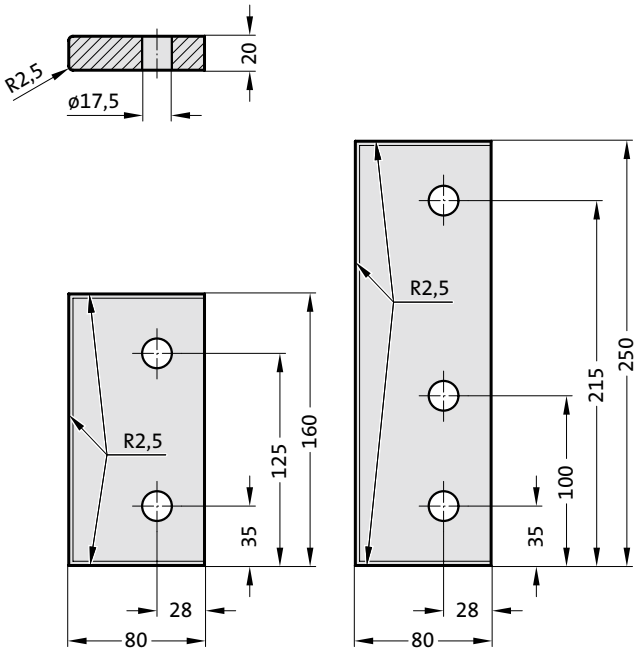

Material:
Steel, surface hardened

Note:
Screws not included.

Fixing:
Use socket cap screws DIN EN ISO 4762 M16.

2961.79.45. Retaining plate, Steel, CNOMO

Order No	Number of screw holes
2961.79.45.080.20.160	2
2961.79.45.080.20.250	3

subject to alterations

Retaining plate, Bronze with solid lubricant, CNOMO

2961.81.45.

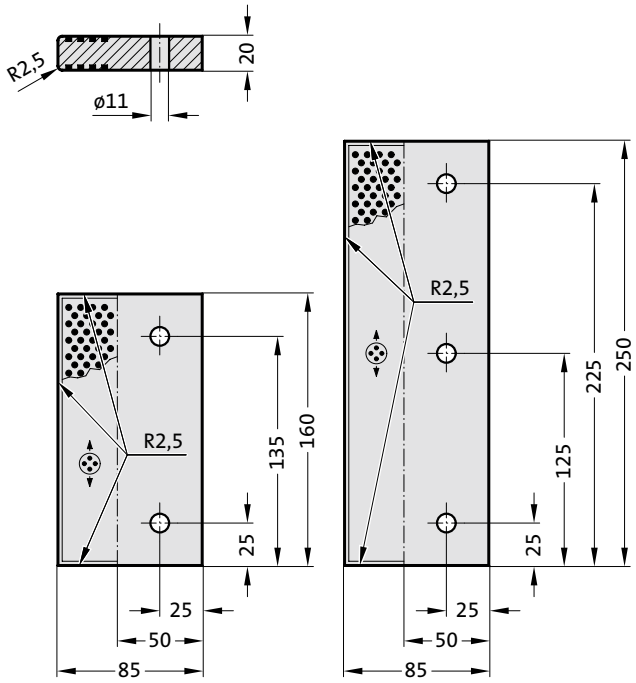

Mounting example

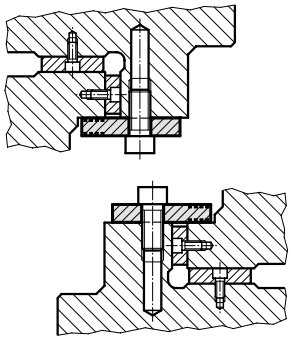



Material:
Bronze with solid lubricant, oilless lubricating

Note:
Screws not included.

Fixing:
Use socket cap screws DIN EN ISO 4762 M10.

2961.81.45. Retaining plate, Bronze with solid lubricant, CNOMO

Order No	Number of screw holes
2961.81.45.085.20.160	2
2961.81.45.085.20.250	3

Sliding pad, small dimension, Bronze with solid lubricant



2960.72.

A

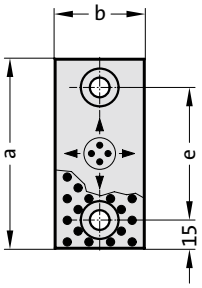

B

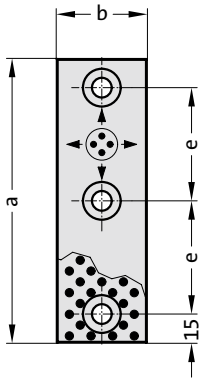

2960.72.

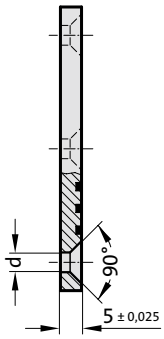

C

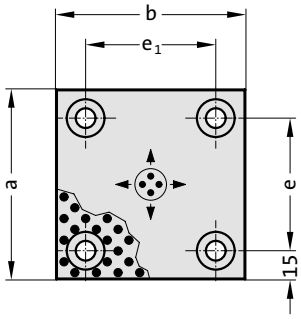

D

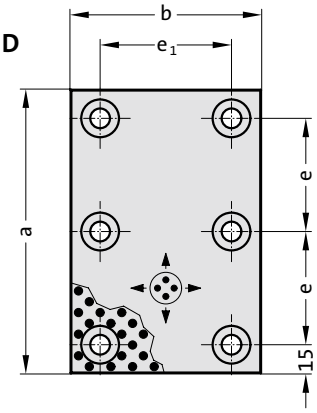

Material:

Bronze with solid lubricant, oilless lubricating

Note:

Screws not included.

Fixing:

Use countersunk cap screws DIN 7991/ISO 10642.

2960.72. Sliding pad, small dimension, Bronze with solid lubricant

Order No	Shape	b	a	e	e_1	d	Number of screw holes
2960.72.018.050	A	18	50	20	-	6.5	2
2960.72.018.075	A	18	75	45	-	6.5	2
2960.72.018.100	A	18	100	70	-	6.5	2
2960.72.018.150	B	18	150	60	-	6.5	3
2960.72.028.050	A	28	50	20	-	9	2
2960.72.028.075	A	28	75	45	-	9	2
2960.72.028.100	A	28	100	70	-	9	2
2960.72.028.150	B	28	150	60	-	9	3
2960.72.038.050	A	38	50	20	-	9	2
2960.72.038.075	A	38	75	45	-	9	2
2960.72.038.100	A	38	100	70	-	9	2
2960.72.038.150	B	38	150	60	-	9	3
2960.72.048.075	A	48	75	45	-	9	2
2960.72.048.100	A	48	100	70	-	9	2
2960.72.048.125	A	48	125	95	-	9	2
2960.72.048.150	B	48	150	60	-	9	3
2960.72.075.075	C	75	75	45	45	9	4
2960.72.075.100	C	75	100	70	45	9	4
2960.72.075.125	C	75	125	95	45	9	4
2960.72.075.150	D	75	150	60	45	9	6
2960.72.100.100	C	100	100	70	70	9	4
2960.72.100.125	C	100	125	95	70	9	4
2960.72.100.150	D	100	150	60	70	9	6

subject to alterations

Sliding pad, Bronze with solid lubricant, VDI 3357



Material:
Bronze with solid lubricant, oilless lubricating

Note:
Screws not included.

Fixing:
Use socket cap screws DIN EN ISO 4762.

2960.71.

D

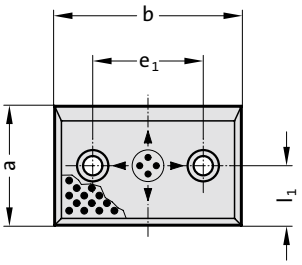

B

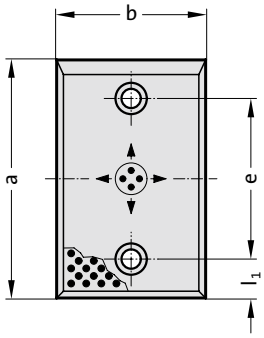

G

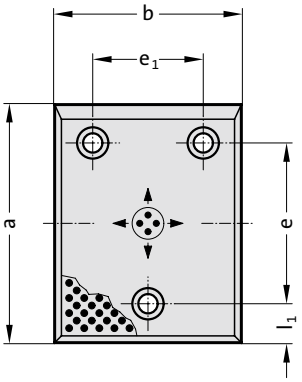

H

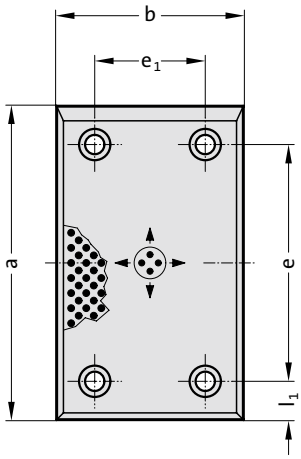

2960.71.

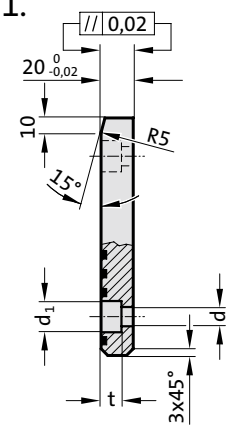

2960.71. Sliding pad, Bronze with solid lubricant, VDI 3357

Order No	Shape	b	a	l_1	e	e_1	d	d_1	t	Number of screw holes
2960.71.050.080	B	50	80	25	30	-	9	15	9	2
2960.71.050.100	B	50	100	25	50	-	13.5	20	13	2
2960.71.050.125	B	50	125	25	75	-	13.5	20	13	2
2960.71.050.160	B	50	160	25	110	-	13.5	20	13	2
2960.71.050.200	B	50	200	25	150	-	13.5	20	13	2
2960.71.080.050	D	80	50	25	-	30	9	15	9	2
2960.71.080.080	B	80	80	25	30	-	13.5	20	13	2
2960.71.080.100	B	80	100	25	50	-	13.5	20	13	2
2960.71.080.125	B	80	125	25	75	-	13.5	20	13	2
2960.71.080.160	B	80	160	25	110	-	13.5	20	13	2
2960.71.080.200	B	80	200	25	150	-	13.5	20	13	2
2960.71.080.250	B	80	250	40	170	-	13.5	20	13	2
2960.71.080.315	B	80	315	40	235	-	13.5	20	13	2
2960.71.100.050	D	100	50	25	-	50	13.5	20	13	2
2960.71.100.080	D	100	80	40	-	50	13.5	20	13	2
2960.71.100.100	B	100	100	25	50	-	13.5	20	13	2
2960.71.100.125	B	100	125	25	75	-	13.5	20	13	2
2960.71.100.160	B	100	160	25	110	-	13.5	20	13	2
2960.71.100.200	B	100	200	25	150	-	13.5	20	13	2
2960.71.100.250	B	100	250	40	170	-	13.5	20	13	2
2960.71.100.315	B	100	315	40	235	-	13.5	20	13	2
2960.71.125.050	D	125	50	25	-	75	13.5	20	13	2
2960.71.125.080	D	125	80	40	-	75	13.5	20	13	2
2960.71.125.100	G	125	100	25	50	75	13.5	20	13	3
2960.71.125.125	G	125	125	25	75	75	13.5	20	13	3
2960.71.125.160	G	125	160	25	110	75	13.5	20	13	3
2960.71.125.200	G	125	200	25	150	75	13.5	20	13	3
2960.71.125.250	G	125	250	40	170	75	13.5	20	13	3
2960.71.125.315	G	125	315	40	235	75	13.5	20	13	3
2960.71.160.050	D	160	50	25	-	110	13.5	20	13	2
2960.71.160.080	D	160	80	40	-	110	13.5	20	13	2
2960.71.160.100	G	160	100	25	50	110	13.5	20	13	3
2960.71.160.125	G	160	125	25	75	110	13.5	20	13	3
2960.71.160.160	G	160	160	25	110	110	13.5	20	13	3
2960.71.160.200	G	160	200	25	150	110	13.5	20	13	3
2960.71.160.250	H	160	250	40	170	110	13.5	20	13	4
2960.71.160.315	H	160	315	40	235	110	13.5	20	13	4

Sliding pad, Steel, VDI 3357



2960.87.

D

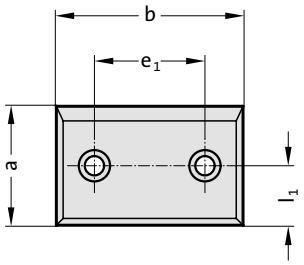

B

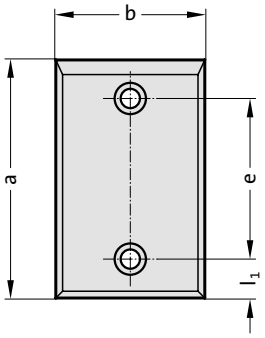

G

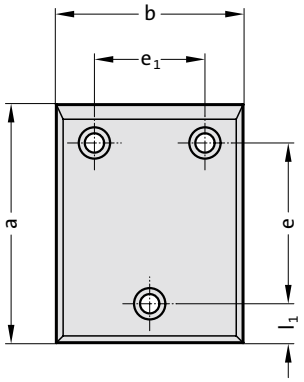

H

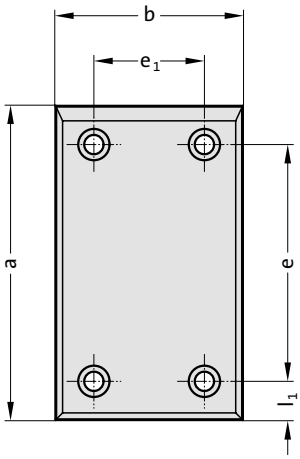

Material:
Steel, surface hardened

Note:
Screws not included.

Fixing:
Use socket cap screws DIN EN ISO 4762.

2960.87.

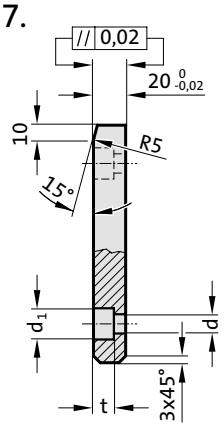

subject to alterations

Sliding pad, Steel, VDI 3357

2960.87. Sliding pad, Steel, VDI 3357

Order No	Shape	b	a	l_1	e	e_1	d	d_1	t	Number of screw holes
2960.87.050.080	B	50	80	25	30	-	9	15	9	2
2960.87.050.100	B	50	100	25	50	-	13.5	20	13	2
2960.87.050.125	B	50	125	25	75	-	13.5	20	13	2
2960.87.050.160	B	50	160	25	110	-	13.5	20	13	2
2960.87.050.200	B	50	200	25	150	-	13.5	20	13	2
2960.87.080.050	D	80	50	25	-	30	9	15	9	2
2960.87.080.080	B	80	80	25	30	-	13.5	20	13	2
2960.87.080.100	B	80	100	25	50	-	13.5	20	13	2
2960.87.080.125	B	80	125	25	75	-	13.5	20	13	2
2960.87.080.160	B	80	160	25	110	-	13.5	20	13	2
2960.87.080.200	B	80	200	25	150	-	13.5	20	13	2
2960.87.080.250	B	80	250	40	170	-	13.5	20	13	2
2960.87.080.315	B	80	315	40	235	-	13.5	20	13	2
2960.87.100.050	D	100	50	25	-	50	13.5	20	13	2
2960.87.100.080	D	100	80	40	-	50	13.5	20	13	2
2960.87.100.100	B	100	100	25	50	-	13.5	20	13	2
2960.87.100.125	B	100	125	25	75	-	13.5	20	13	2
2960.87.100.160	B	100	160	25	110	-	13.5	20	13	2
2960.87.100.200	B	100	200	25	150	-	13.5	20	13	2
2960.87.100.250	B	100	250	40	170	-	13.5	20	13	2
2960.87.100.315	B	100	315	40	235	-	13.5	20	13	2
2960.87.125.050	D	125	50	25	-	75	13.5	20	13	2
2960.87.125.080	D	125	80	40	-	75	13.5	20	13	2
2960.87.125.100	G	125	100	25	50	75	13.5	20	13	3
2960.87.125.125	G	125	125	25	75	75	13.5	20	13	3
2960.87.125.160	G	125	160	25	110	75	13.5	20	13	3
2960.87.125.200	G	125	200	25	150	75	13.5	20	13	3
2960.87.125.250	G	125	250	40	170	75	13.5	20	13	3
2960.87.125.315	G	125	315	40	235	75	13.5	20	13	3
2960.87.160.050	D	160	50	25	-	110	13.5	20	13	2
2960.87.160.080	D	160	80	40	-	110	13.5	20	13	2
2960.87.160.100	G	160	100	25	50	110	13.5	20	13	3
2960.87.160.125	G	160	125	25	75	110	13.5	20	13	3
2960.87.160.160	G	160	160	25	110	110	13.5	20	13	3
2960.87.160.200	G	160	200	25	150	110	13.5	20	13	3
2960.87.160.250	H	160	250	40	170	110	13.5	20	13	4
2960.87.160.315	H	160	315	40	235	110	13.5	20	13	4

Sliding pad, Steel with sinterlayer, VDI 3357



2960.30.

D

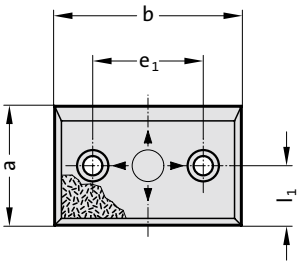

B

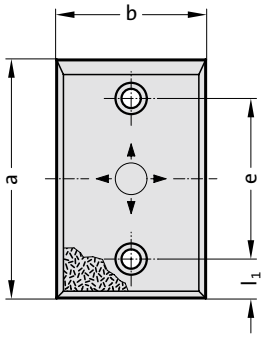

G

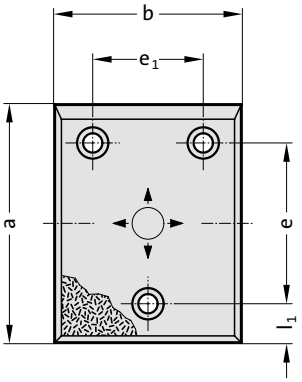

H

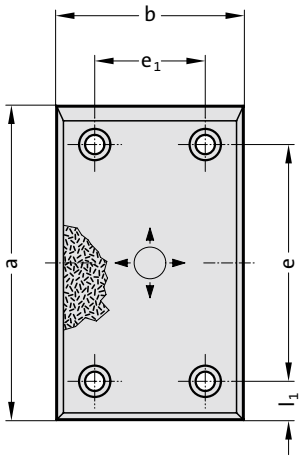

Description:
Steel with sinterlayer is a two-layer material. It ensures low maintenance, selflubricating service even in arduous multishift applications.

Material:
Steel plate with sinterlayer, part of lubricant 20-25%.

Note:
Screws not included.

Fixing:
Use socket cap screws DIN EN ISO 4762.

2960.30.

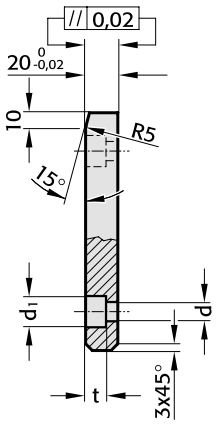

subject to alterations

Sliding pad, Steel with sinterlayer, VDI 3357

2960.30. Sliding pad, Steel with sinterlayer, VDI 3357

Order No	Form	b	a	l_1	e	e_1	d	d_1	t	Number of screw holes
2960.30.050.080	B	50	80	25	30	-	9	15	9	2
2960.30.050.100	B	50	100	25	50	-	13.5	20	13	2
2960.30.050.125	B	50	125	25	75	-	13.5	20	13	2
2960.30.050.160	B	50	160	25	110	-	13.5	20	13	2
2960.30.050.200	B	50	200	25	150	-	13.5	20	13	2
2960.30.080.050	D	80	50	25	-	30	9	15	9	2
2960.30.080.080	B	80	80	25	30	-	13.5	20	13	2
2960.30.080.100	B	80	100	25	50	-	13.5	20	13	2
2960.30.080.125	B	80	125	25	75	-	13.5	20	13	2
2960.30.080.160	B	80	160	25	110	-	13.5	20	13	2
2960.30.080.200	B	80	200	25	150	-	13.5	20	13	2
2960.30.080.250	B	80	250	40	170	-	13.5	20	13	2
2960.30.080.315	B	80	315	40	235	-	13.5	20	13	2
2960.30.100.050	D	100	50	25	-	50	13.5	20	13	2
2960.30.100.080	D	100	80	40	-	50	13.5	20	13	2
2960.30.100.100	B	100	100	25	50	-	13.5	20	13	2
2960.30.100.125	B	100	125	25	75	-	13.5	20	13	2
2960.30.100.160	B	100	160	25	110	-	13.5	20	13	2
2960.30.100.200	B	100	200	25	150	-	13.5	20	13	2
2960.30.100.250	B	100	250	40	170	-	13.5	20	13	2
2960.30.100.315	B	100	315	40	235	-	13.5	20	13	2
2960.30.125.050	D	125	50	25	-	75	13.5	20	13	2
2960.30.125.080	D	125	80	40	-	75	13.5	20	13	2
2960.30.125.100	G	125	100	25	50	75	13.5	20	13	3
2960.30.125.125	G	125	125	25	75	75	13.5	20	13	3
2960.30.125.160	G	125	160	25	110	75	13.5	20	13	3
2960.30.125.200	G	125	200	25	150	75	13.5	20	13	3
2960.30.125.250	G	125	250	40	170	75	13.5	20	13	3
2960.30.125.315	G	125	315	40	235	75	13.5	20	13	3
2960.30.160.050	D	160	50	25	-	110	13.5	20	13	2
2960.30.160.080	D	160	80	40	-	110	13.5	20	13	2
2960.30.160.100	G	160	100	25	50	110	13.5	20	13	3
2960.30.160.125	G	160	125	25	75	110	13.5	20	13	3
2960.30.160.160	G	160	160	25	110	110	13.5	20	13	3
2960.30.160.200	G	160	200	25	150	110	13.5	20	13	3
2960.30.160.250	H	160	250	40	170	110	13.5	20	13	4
2960.30.160.315	H	160	315	40	235	110	13.5	20	13	4

Sliding pad, Bronze with solid lubricant, ISO 9183-1



Material:
Bronze with solid lubricant, oilless lubricating

Note:
Screws not included.

Fixing:
Use socket cap screws DIN EN ISO 4762 M12.

2960.70.

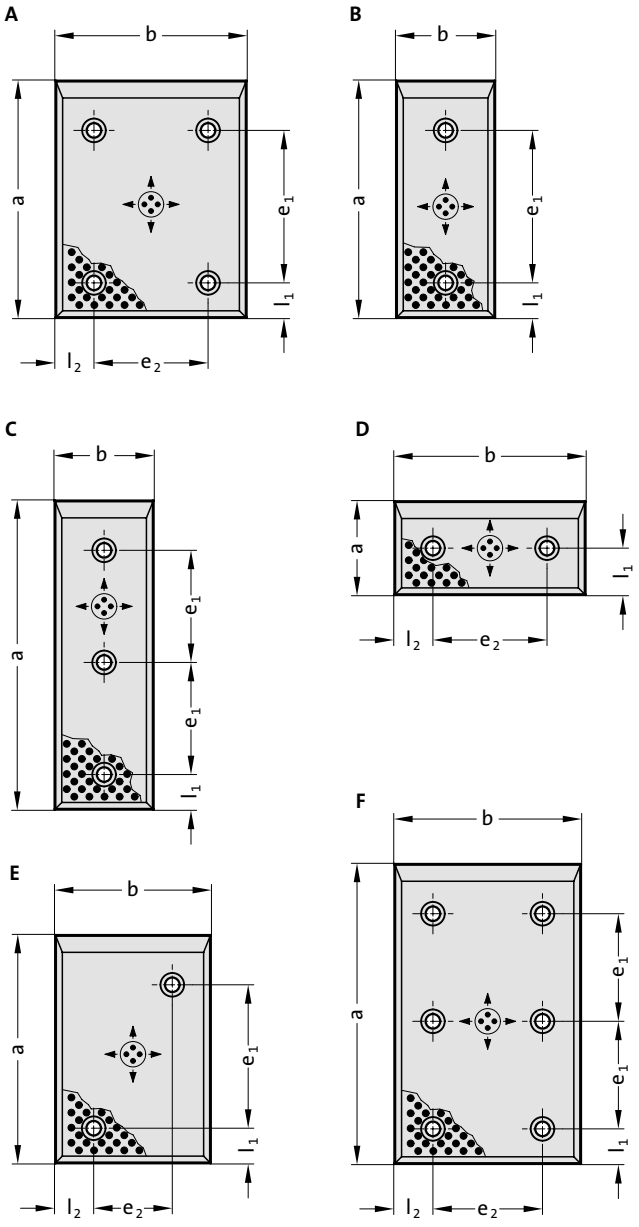

2960.70.

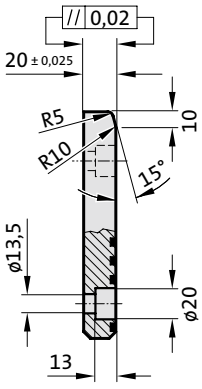

subject to alterations

Sliding pad, Bronze with solid lubricant, ISO 9183-1

2960.70. Sliding pad, Bronze with solid lubricant, ISO 9183-1

Order No	Shape	b	a	l_1	e_1	l_2	e_2
2960.70.050.080	B	50	80	20	35	25	-
2960.70.050.100	B	50	100	20	55	25	-
2960.70.050.125	B	50	125	20	80	25	-
2960.70.050.160	B	50	160	20	115	25	-
2960.70.050.200	B	50	200	20	155	25	-
2960.70.050.250	C	50	250	20	100	25	-
2960.70.080.050	D	80	50	25	-	20	40
2960.70.080.080	E	80	80	20	35	20	40
2960.70.080.100	E	80	100	20	55	20	40
2960.70.080.125	E	80	125	20	80	20	40
2960.70.080.160	A	80	160	20	115	20	40
2960.70.080.200	A	80	200	20	155	20	40
2960.70.080.250	F	80	250	20	100	20	40
2960.70.080.315	F	80	315	20	132	20	40
2960.70.100.050	D	100	50	25	-	20	60
2960.70.100.080	E	100	80	20	35	20	60
2960.70.100.100	E	100	100	20	55	20	60
2960.70.100.125	A	100	125	20	80	20	60
2960.70.100.160	A	100	160	20	115	20	60
2960.70.100.200	A	100	200	20	155	20	60
2960.70.100.250	F	100	250	20	100	20	60
2960.70.100.315	F	100	315	20	132	20	60
2960.70.125.050	D	125	50	25	-	20	85
2960.70.125.080	E	125	80	20	35	20	85
2960.70.125.100	A	125	100	20	55	20	85
2960.70.125.125	A	125	125	20	80	20	85
2960.70.125.160	A	125	160	20	115	20	85
2960.70.125.200	A	125	200	20	155	20	85
2960.70.125.250	F	125	250	20	100	20	85
2960.70.125.315	F	125	315	20	132	20	85
2960.70.160.050	D	160	50	25	-	20	120
2960.70.160.080	A	160	80	20	35	20	120
2960.70.160.100	A	160	100	20	55	20	120
2960.70.160.125	A	160	125	20	80	20	120
2960.70.160.160	A	160	160	20	115	20	120
2960.70.160.200	A	160	200	20	155	20	120
2960.70.160.250	F	160	250	20	100	20	120
2960.70.160.315	F	160	315	20	132	20	120

Sliding pad, Bronze with solid lubricant



2960.85.

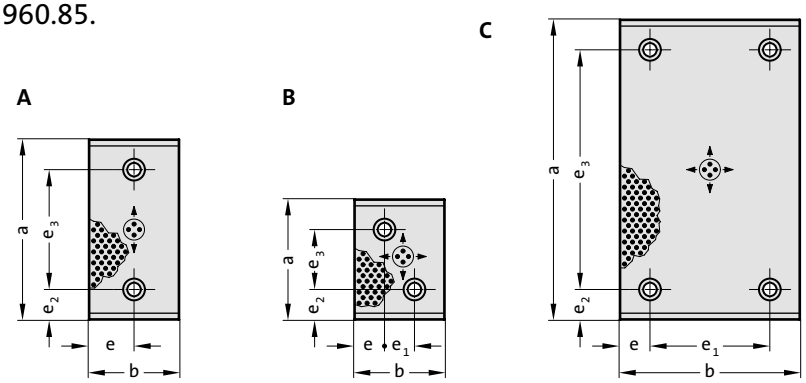

2960.85.

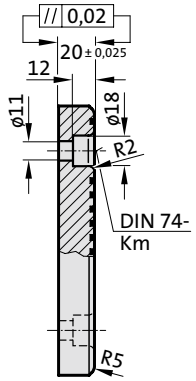

Material:
Bronze with solid lubricant, oilless lubricating

Note:
Screws not included.

Fixing:
Use socket cap screws DIN EN ISO 4762 M10.

2960.85. Sliding pad, Bronze with solid lubricant

Order No	Shape	b	a	e	e_1	e_2	e_3	Number of screw holes
2960.85.028.075	A	28	75	14	-	15	45	2
2960.85.028.100	A	28	100	14	-	25	50	2
2960.85.028.125	A	28	125	14	-	25	75	2
2960.85.028.150	A	28	150	14	-	25	100	2
2960.85.038.075	A	38	75	19	-	15	45	2
2960.85.038.100	A	38	100	19	-	25	50	2
2960.85.038.125	A	38	125	19	-	25	75	2
2960.85.038.150	A	38	150	19	-	25	100	2
2960.85.038.200	A	38	200	19	-	25	150	2
2960.85.048.075	A	48	75	24	-	15	45	2
2960.85.048.100	A	48	100	24	-	25	50	2
2960.85.048.125	A	48	125	24	-	25	75	2
2960.85.048.150	A	48	150	24	-	25	100	2
2960.85.048.200	A	48	200	24	-	25	150	2
2960.85.058.075	A	58	75	29	-	15	45	2
2960.85.058.100	A	58	100	29	-	25	50	2
2960.85.058.150	A	58	150	29	-	25	100	2
2960.85.075.075.1	A	75	75	37.5	-	15	45	2
2960.85.075.075	B	75	75	25	25	25	25	2
2960.85.075.100.1	A	75	100	37.5	-	25	50	2
2960.85.075.100	B	75	100	25	25	25	50	2
2960.85.075.125	A	75	125	37.5	-	25	75	2
2960.85.075.150	A	75	150	37.5	-	25	100	2
2960.85.075.200	A	75	200	37.5	-	25	150	2
2960.85.100.100	C	100	100	25	50	25	50	4
2960.85.100.125	C	100	125	25	50	25	75	4
2960.85.100.150	C	100	150	25	50	25	100	4
2960.85.100.200	C	100	200	25	50	25	150	4
2960.85.100.250	C	100	250	25	50	25	200	4
2960.85.100.300	C	100	300	25	50	25	250	4
2960.85.125.125	C	125	125	37.5	50	25	75	4
2960.85.125.150	C	125	150	37.5	50	25	100	4
2960.85.125.200	C	125	200	37.5	50	25	150	4
2960.85.125.250	C	125	250	37.5	50	25	200	4
2960.85.125.300	C	125	300	37.5	50	25	250	4
2960.85.125.350	C	125	350	37.5	50	25	300	4
2960.85.150.150	C	150	150	25	100	25	100	4
2960.85.150.200	C	150	200	25	100	25	150	4
2960.85.150.250	C	150	250	25	100	25	200	4
2960.85.150.300	C	150	300	25	100	25	250	4
2960.85.200.200	C	200	200	25	150	25	150	4
2960.85.200.250	C	200	250	25	150	25	200	4
2960.85.200.300	C	200	300	25	150	25	250	4

subject to alterations

Sliding pad, Bronze with solid lubricant

2960.86.



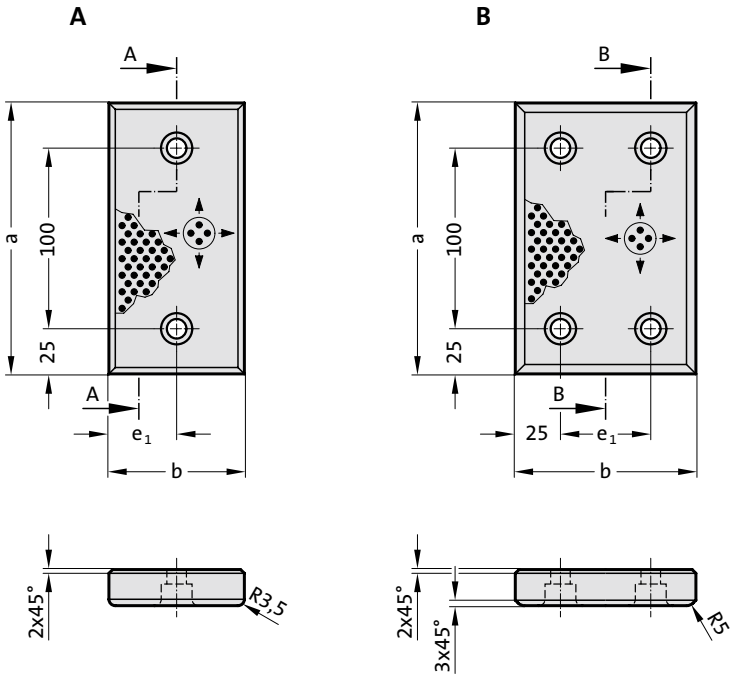

2960.86.

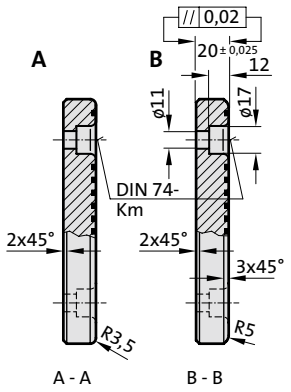

2960.86. Sliding pad, Bronze with solid lubricant

Order No	Shape	b	a	e_1	Number of screw holes
2960.86.038.150	A	38	150	19	2
2960.86.075.150	A	75	150	37.5	2
2960.86.100.150	B	100	150	50	4

Material:
Bronze with solid lubricant, oilless lubricating

Note:
Screws not included.

Fixing:
Use socket cap screws DIN EN ISO 4762 M10.

Sliding pad, Bronze with solid lubricant



2960.76.

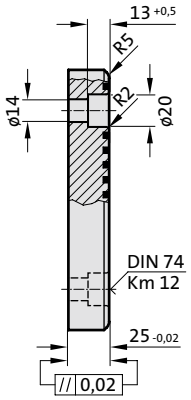

2960.76.

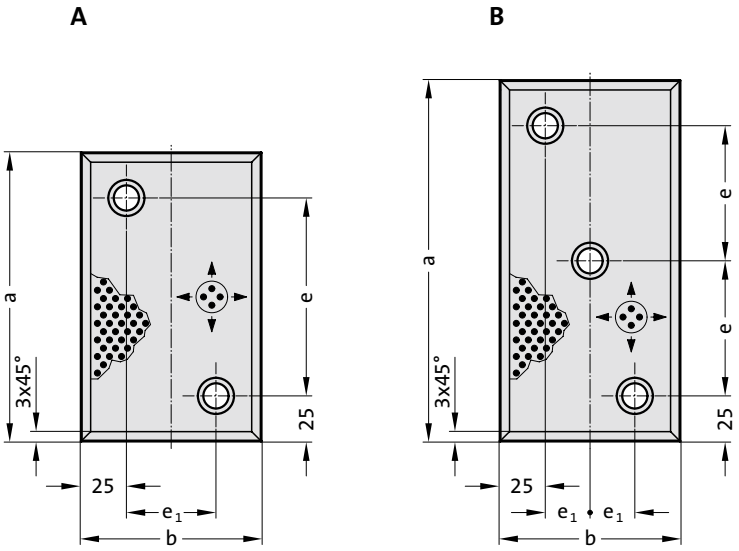

Material:
Bronze with solid lubricant, oilless lubricating

Note:
Screws not included.

Fixing:
Use socket cap screws DIN EN ISO 4762 M12.

2960.76. Sliding pad, Bronze with solid lubricant

Order No	Shape	b	a	e	e_1	Number of screw holes
2960.76.080.100	A	80	100	50	30	2
2960.76.080.125	A	80	125	75	30	2
2960.76.080.160	A	80	160	110	30	2
2960.76.080.200	B	80	200	75	15	3
2960.76.100.125	A	100	125	75	50	2
2960.76.100.160	A	100	160	110	50	2
2960.76.100.200	B	100	200	75	25	3
2960.76.125.125	A	125	125	75	75	2

subject to alterations

Sliding pad, Bronze with solid lubricant, CNOMO

2962.78.45.

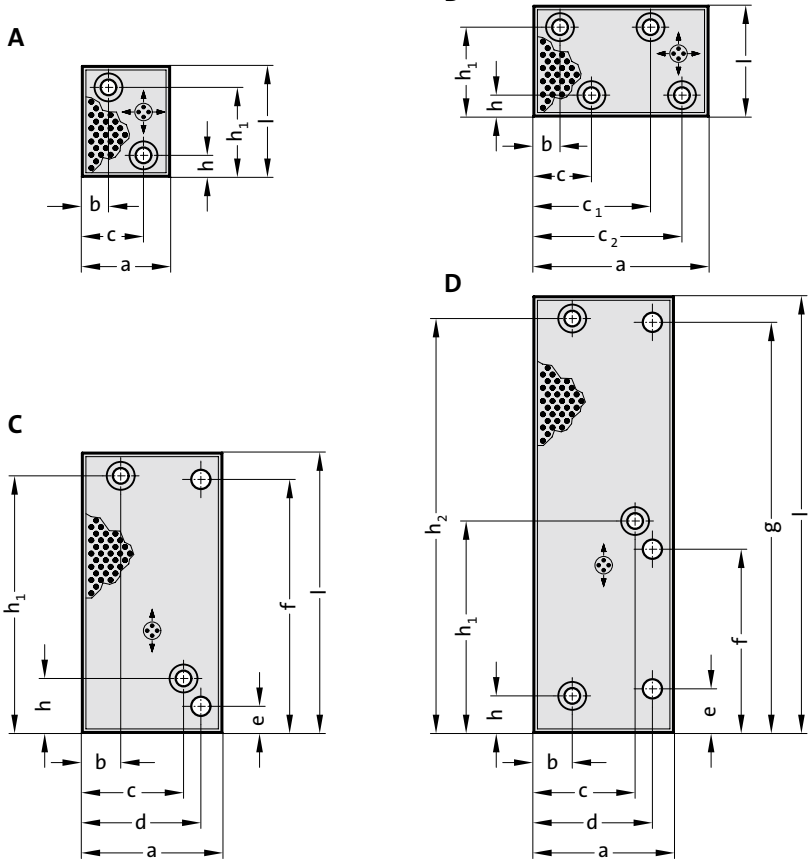



2962.78.45.

A, B

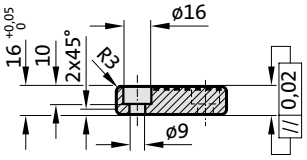

C, D

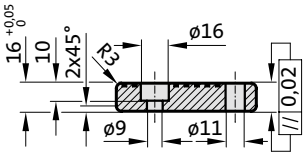

2962.78.45. Sliding pad, Bronze with solid lubricant, CNOMO

Order No	Shape	a	l	b	c	c_1	c_2	d	e	f	g	h	h_1	h_2	Number of screw counterbores	Number of screw holes
2962.78.45.050.16.063	A	50	63	15	35	-	-	-	-	-	-	12	51	-	2	-
2962.78.45.050.16.160	C	50	160	19	31	-	-	-	-	-	-	21	147	-	2	-
2962.78.45.050.16.250	D	50	250	19	31	-	-	-	-	-	-	21	121	237	3	-
2962.78.45.080.16.160	C	80	160	22	58	-	-	68	15	145	-	31	147	-	2	2
2962.78.45.080.16.250	D	80	250	22	58	-	-	68	25	105	235	21	121	237	3	3
2962.78.45.100.16.063	B	100	63	15	33	67	85	-	-	-	-	12	51	-	4	-

Material:

Bronze with solid lubricant, oilless lubricating

Note:

Screws not included.

Fixing:

Use socket cap screws DIN EN ISO 4762 M8.

Sliding pad, Bronze with solid lubricant



Material:
Bronze with solid lubricant, oilless lubricating

Note:
Screws are not included.

Fixing:
Use socket cap screws DIN EN ISO 4762, or countersunk cap screws DIN 7991/ISO 10642.

2962.78.

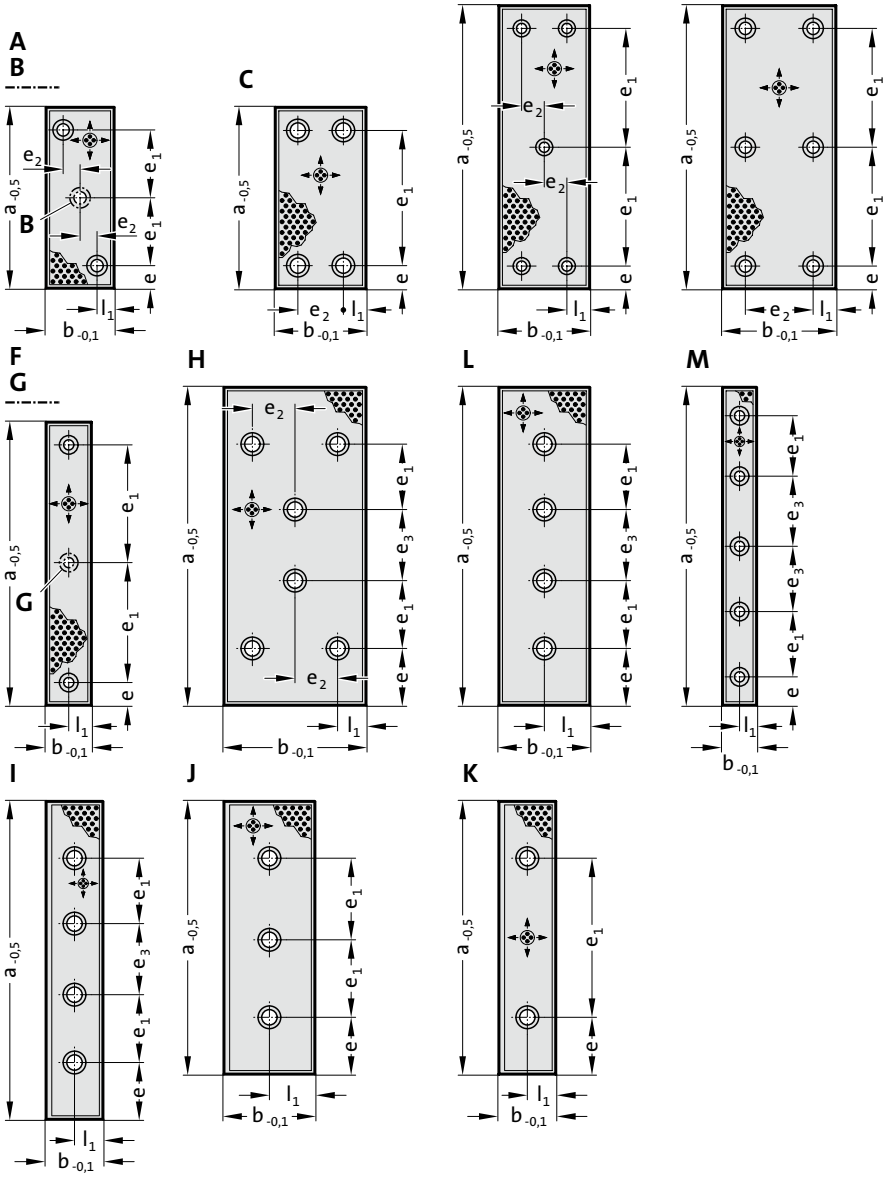

2962.78.

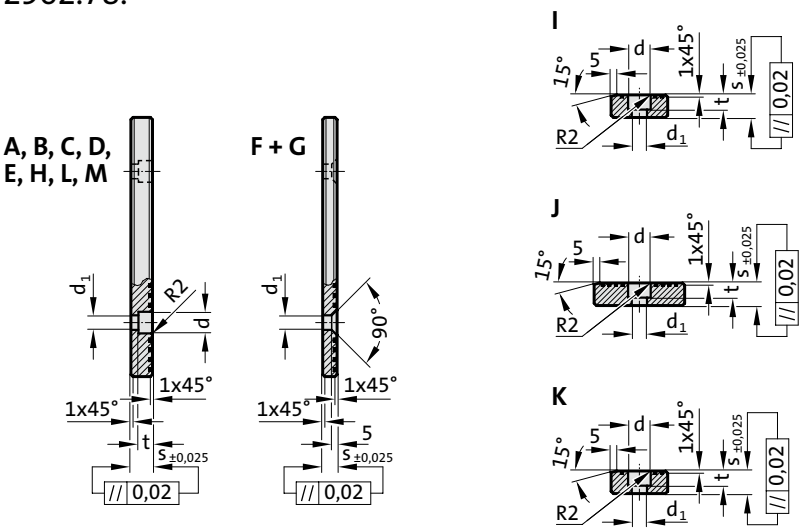

Sliding pad, Bronze with solid lubricant

2962.78. Sliding pad, Bronze with solid lubricant

Order No	Shape	b	s	a	l_1	e	e_1	e_2	e_3	Number of screw holes	d	d_1	t
2962.78.030.12.0100	A	30	12	100	15	20	60	-	-	2	15	9	9
2962.78.030.12.0160	B	30	12	160	15	20	60	-	-	3	15	9	9
2962.78.030.12.0240	B	30	12	240	15	25	95	-	-	3	15	9	9
2962.78.030.12.0250	B	30	12	250	15	20	105	-	-	3	15	9	9
2962.78.030.12.0300	L	30	12	300	15	25	85	-	80	4	15	9	9
2962.78.030.12.0350	L	30	12	350	15	25	100	-	100	4	15	9	9
2962.78.030.12.0400	L	30	12	400	15	25	115	-	120	4	15	9	9
2962.78.030.12.0450	M	30	12	450	15	25	100	-	100	5	15	9	9
2962.78.030.12.0500	M	30	12	500	15	25	110	-	115	5	15	9	9
2962.78.040.08.0100	F	40	8	100	20	20	60	-	-	2	-	9	5
2962.78.040.08.0160	G	40	8	160	20	20	60	-	-	3	-	9	5
2962.78.040.08.0250	G	40	8	250	20	20	105	-	-	3	-	9	5
2962.78.040.12.0100	A	40	12	100	20	20	60	-	-	2	15	9	9
2962.78.040.12.0160	B	40	12	160	20	20	60	-	-	3	15	9	9
2962.78.040.12.0250	B	40	12	250	20	20	105	-	-	3	15	9	9
2962.78.040.16.0100	A	40	16	100	20	20	60	-	-	2	18	11	11
2962.78.040.16.0160	B	40	16	160	20	20	60	-	-	3	18	11	11
2962.78.040.16.0250	B	40	16	250	20	20	105	-	-	3	18	11	11
2962.78.050.20.0100	A	50	20	100	15	20	60	20	-	2	20	13.5	13
2962.78.050.20.0160	B	50	20	160	15	20	60	10	-	3	20	13.5	13
2962.78.050.20.0240	A	50	20	240	25	50	140	-	-	2	20	13.5	13
2962.78.050.20.0240.1	K	50	20	240	25	50	140	-	-	2	20	13.5	13
2962.78.050.20.0250	B	50	20	250	15	20	105	10	-	3	20	13.5	13
2962.78.050.20.0300	B	50	20	300	25	50	100	-	-	3	20	13.5	13
2962.78.050.20.0300.1	J	50	20	300	25	50	100	-	-	3	20	13.5	13
2962.78.050.20.0350	B	50	20	350	25	50	125	-	-	3	20	13.5	13
2962.78.050.20.0350.1	J	50	20	350	25	50	125	-	-	3	20	13.5	13
2962.78.050.20.0400.1	J	50	20	400	25	50	150	-	-	3	20	13.5	13
2962.78.050.20.0450.1	I	50	20	450	25	50	115	-	120	4	20	13.5	13
2962.78.050.20.0500.1	I	50	20	500	25	50	135	-	130	4	20	13.5	13
2962.78.060.16.0100	A	60	16	100	15	20	60	30	-	2	18	11	11
2962.78.060.16.0160	B	60	16	160	15	20	60	15	-	3	18	11	11
2962.78.060.16.0250	B	60	16	250	15	20	105	15	-	3	18	11	11
2962.78.080.12.0100	A	80	12	100	20	20	60	40	-	2	15	9	9
2962.78.080.12.0160	C	80	12	160	20	20	120	40	-	4	15	9	9
2962.78.080.12.0250	D	80	12	250	20	20	105	20	-	5	15	9	9
2962.78.080.20.0100	A	80	20	100	20	20	60	40	-	2	20	13.5	13
2962.78.080.20.0160	C	80	20	160	20	20	120	40	-	4	20	13.5	13
2962.78.080.20.0250	D	80	20	250	20	20	105	20	-	5	20	13.5	13
2962.78.080.20.0300	B	80	20	300	40	50	100	-	-	3	20	13.5	13
2962.78.080.20.0300.1	J	80	20	300	40	50	100	-	-	3	20	13.5	13
2962.78.080.20.0350	B	80	20	350	40	50	125	-	-	3	20	13.5	13
2962.78.080.20.0350.1	J	80	20	350	40	50	125	-	-	3	20	13.5	13
2962.78.080.20.0400	B	80	20	400	40	50	150	-	-	3	20	13.5	13
2962.78.080.20.0400.1	J	80	20	400	40	50	150	-	-	3	20	13.5	13
2962.78.080.20.0450	L	80	20	450	40	50	115	-	120	4	20	13.5	13
2962.78.080.20.0450.1	I	80	20	450	40	50	115	-	120	4	20	13.5	13
2962.78.080.20.0500	L	80	20	500	40	50	135	-	130	4	20	13.5	13
2962.78.080.20.0500.1	I	80	20	500	40	50	135	-	130	4	20	13.5	13
2962.78.100.16.0100	A	100	16	100	20	20	60	60	-	2	18	11	11
2962.78.100.16.0160	C	100	16	160	20	20	120	60	-	4	18	11	11
2962.78.100.16.0250	E	100	16	250	20	20	105	60	-	6	18	11	11
2962.78.125.20.0100	C	125	20	100	20	20	60	85	-	4	20	13.5	13
2962.78.125.20.0160	C	125	20	160	20	20	120	85	-	4	20	13.5	13
2962.78.125.20.0250	E	125	20	250	20	20	105	85	-	6	20	13.5	13
2962.78.125.20.0400	D	125	20	400	25	50	150	37.5	-	5	20	13.5	13
2962.78.125.20.0450	H	125	20	450	25	50	115	37.5	120	6	20	13.5	13
2962.78.125.20.0500	H	125	20	500	25	50	135	37.5	130	6	20	13.5	13

Sliding pad, Steel, CNOMO



2962.84.45.

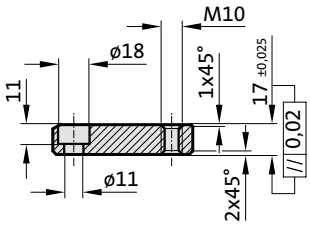

2962.84.45.

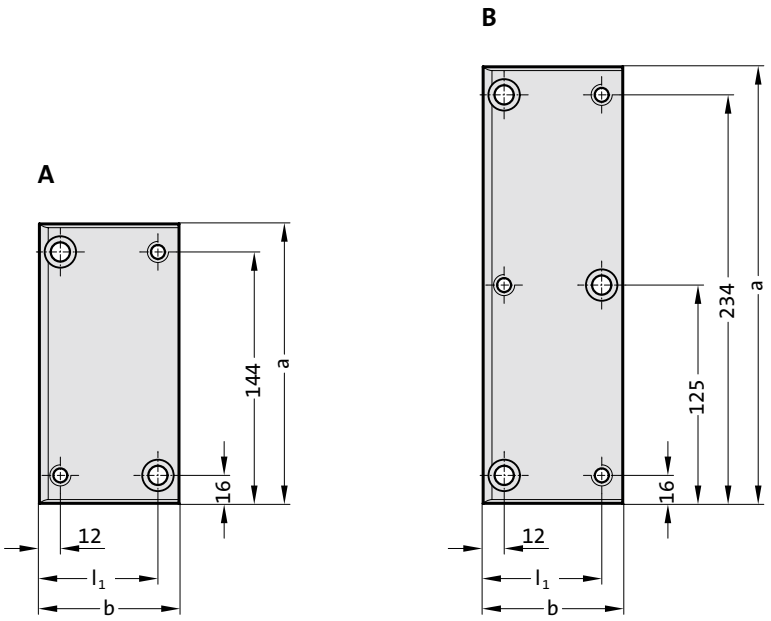

Material:
Steel, surface hardened

Note:
Screws not included.

Fixing:
Use socket cap screws
DIN EN ISO 4762 M10.

2962.84.45. Sliding pad, Steel, CNOMO

Order No	Shape	b	a	l_1	Number of screw counterbores	Number of threads
2962.84.45.050.17.160	A	50	160	38	2	2
2962.84.45.050.17.250	B	50	250	38	3	3
2962.84.45.080.17.160	A	80	160	68	2	2
2962.84.45.080.17.250	B	80	250	68	3	3

subject to alterations

Sliding Pad, Steel with solid lubricant

2962.85.

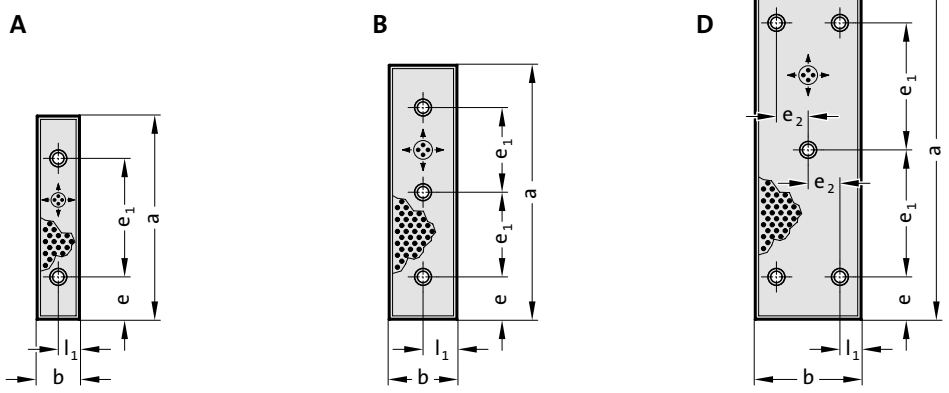



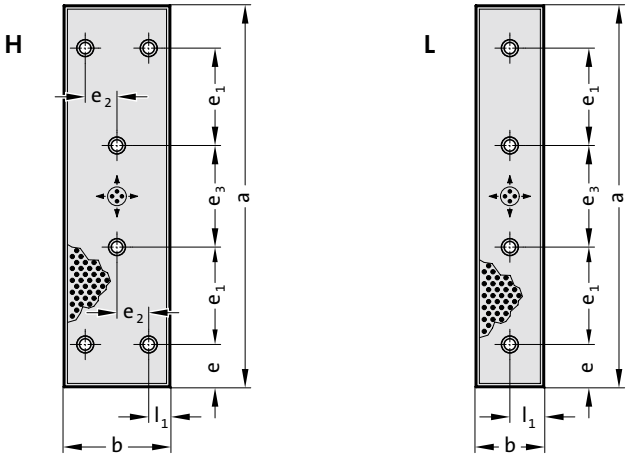

2962.85.

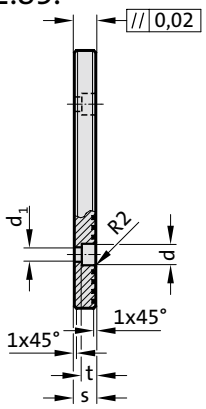

2962.85. Sliding Pad, Steel with solid lubricant

Order No	Shape	b	s	a	l_1	e	e_1	e_2	e_3	Number of screw holes	d_1	d	t
2962.85.050.20.0240	A	50	20	240	25	50	140	-	-	2	13.5	20	13
2962.85.050.20.0300	B	50	20	300	25	50	100	-	-	3	13.5	20	13
2962.85.050.20.0350	B	50	20	350	25	50	125	-	-	3	13.5	20	13
2962.85.080.20.0300	B	80	20	300	40	50	100	-	-	3	13.5	20	13
2962.85.080.20.0350	B	80	20	350	40	50	125	-	-	3	13.5	20	13
2962.85.080.20.0400	B	80	20	400	40	50	150	-	-	3	13.5	20	13
2962.85.080.20.0450	L	80	20	450	40	50	115	-	120	4	13.5	20	13
2962.85.080.20.0500	L	80	20	500	40	50	135	-	130	4	13.5	20	13
2962.85.125.20.0400	D	125	20	400	25	50	150	37.5	-	5	13.5	20	13
2962.85.125.20.0450	H	125	20	450	25	50	115	37.5	120	6	13.5	20	13
2962.85.125.20.0500	H	125	20	500	25	50	135	37.5	130	6	13.5	20	13

Material:
Steel, surface hardened. Sliding faces with embedded solid lubricant.

Note:
Screws not included.

Fixing:
Use socket cap screws DIN EN ISO 4762 M12.

Sliding pad, Bronze with solid lubricant, NAAMS



2960.79.

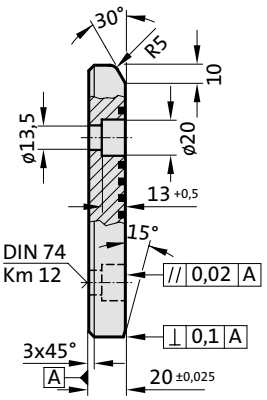

2960.79.

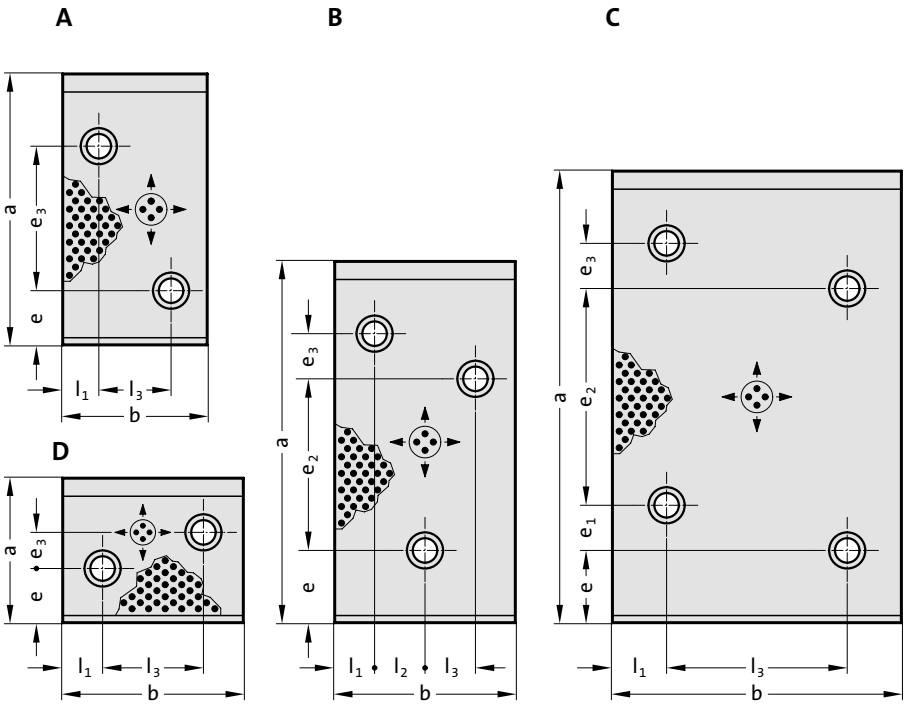

Material:
Bronze with solid lubricant, oilless lubricating

Note:
Screws not included.

Fixing:
Use socket cap screws DIN EN ISO 4762 M12.

2960.79. Sliding pad, Bronze with solid lubricant, NAAMS

Order No	Shape	b	a	l_1	l_2	l_3	e	e_1	e_2	e_3	Number of screw holes
2960.79.050.100	A	50	100	25	-	-	30	-	-	30	2
2960.79.050.150	A	50	150	25	-	-	30	-	-	80	2
2960.79.050.200	A	50	200	25	-	-	40	-	-	120	2
2960.79.080.100	A	80	100	20	-	40	30	-	-	30	2
2960.79.080.150	A	80	150	20	-	40	30	-	-	80	2
2960.79.080.200	A	80	200	20	-	40	40	-	-	120	2
2960.79.080.250	A	80	250	20	-	40	40	-	-	170	2
2960.79.080.315	B	80	315	20	20	20	40	-	210	25	3
2960.79.100.050	D	100	50	22	-	56	14	-	-	13	2
2960.79.100.080	D	100	80	22	-	56	30	-	-	20	2
2960.79.100.100	A	100	100	22	-	56	30	-	-	30	2
2960.79.100.150	A	100	150	22	-	56	30	-	-	80	2
2960.79.100.200	B	100	200	22	28	28	40	-	95	25	3
2960.79.100.250	B	100	250	22	28	28	40	-	145	25	3
2960.79.100.315	B	100	315	22	28	28	40	-	210	25	3
2960.79.125.080	D	125	80	25	-	75	30	-	-	20	2
2960.79.125.100	A	125	100	25	-	75	30	-	-	30	2
2960.79.125.150	A	125	150	25	-	75	30	-	-	80	2
2960.79.125.200	B	125	200	25	37	38	40	-	95	25	3
2960.79.125.250	B	125	250	25	37	38	40	-	145	25	3
2960.79.125.315	C	125	315	25	-	75	40	25	165	25	4
2960.79.160.100	A	160	100	30	-	100	30	-	-	30	2
2960.79.160.150	A	160	150	30	-	100	30	-	-	80	2
2960.79.160.200	B	160	200	30	50	50	40	-	95	25	3
2960.79.160.250	C	160	250	30	-	100	40	25	120	25	4
2960.79.160.315	C	160	315	30	-	100	40	25	185	25	4

subject to alterations

Sliding pad, Steel, NAAMS

2960.80.



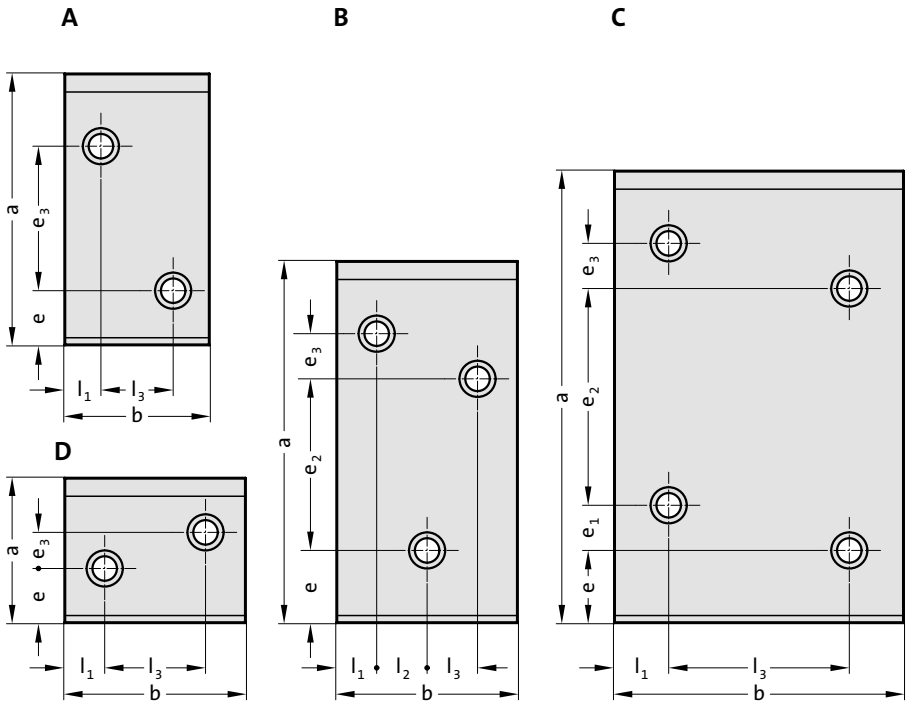

2960.80.

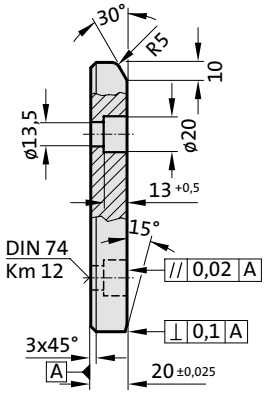

2960.80. Sliding pad, Steel, NAAMS

Order No	Shape	b	a	l_1	l_2	l_3	e	e_1	e_2	e_3	Number of screw holes
2960.80.050.100	A	50	100	25	-	-	30	-	-	30	2
2960.80.050.150	A	50	150	25	-	-	30	-	-	80	2
2960.80.050.200	A	50	200	25	-	-	40	-	-	120	2
2960.80.080.100	A	80	100	20	-	40	30	-	-	30	2
2960.80.080.150	A	80	150	20	-	40	30	-	-	80	2
2960.80.080.200	A	80	200	20	-	40	40	-	-	120	2
2960.80.080.250	A	80	250	20	-	40	40	-	-	170	2
2960.80.080.315	B	80	315	20	20	20	40	-	210	25	3
2960.80.100.050	D	100	50	22	-	56	14	-	-	13	2
2960.80.100.080	D	100	80	22	-	56	30	-	-	20	2
2960.80.100.100	A	100	100	22	-	56	30	-	-	30	2
2960.80.100.150	A	100	150	22	-	56	30	-	-	80	2
2960.80.100.200	B	100	200	22	28	28	40	-	95	25	3
2960.80.100.250	B	100	250	22	28	28	40	-	145	25	3
2960.80.100.315	B	100	315	22	28	28	40	-	210	25	3
2960.80.125.080	D	125	80	25	-	75	30	-	-	20	2
2960.80.125.100	A	125	100	25	-	75	30	-	-	30	2
2960.80.125.150	A	125	150	25	-	75	30	-	-	80	2
2960.80.125.200	B	125	200	25	37	38	40	-	95	25	3
2960.80.125.250	B	125	250	25	37	38	40	-	145	25	3
2960.80.125.315	C	125	315	25	-	75	40	25	165	25	4
2960.80.160.100	A	160	100	30	-	100	30	-	-	30	2
2960.80.160.150	A	160	150	30	-	100	30	-	-	80	2
2960.80.160.200	B	160	200	30	50	50	40	-	95	25	3
2960.80.160.250	C	160	250	30	-	100	40	25	120	25	4
2960.80.160.315	C	160	315	30	-	100	40	25	185	25	4

Material:
Steel, surface hardened

Note:
Screws not included.

Fixing:
Use socket cap screws
DIN EN ISO 4762 M12.

Sliding pad, Bronze with solid lubricant, AFNOR/ISO 9183-2



Material:
Bronze with solid lubricant, oilless lubricating

Note:
Screws not included.

Fixing:
Use socket cap screws DIN EN ISO 4762 M10.

2960.74.

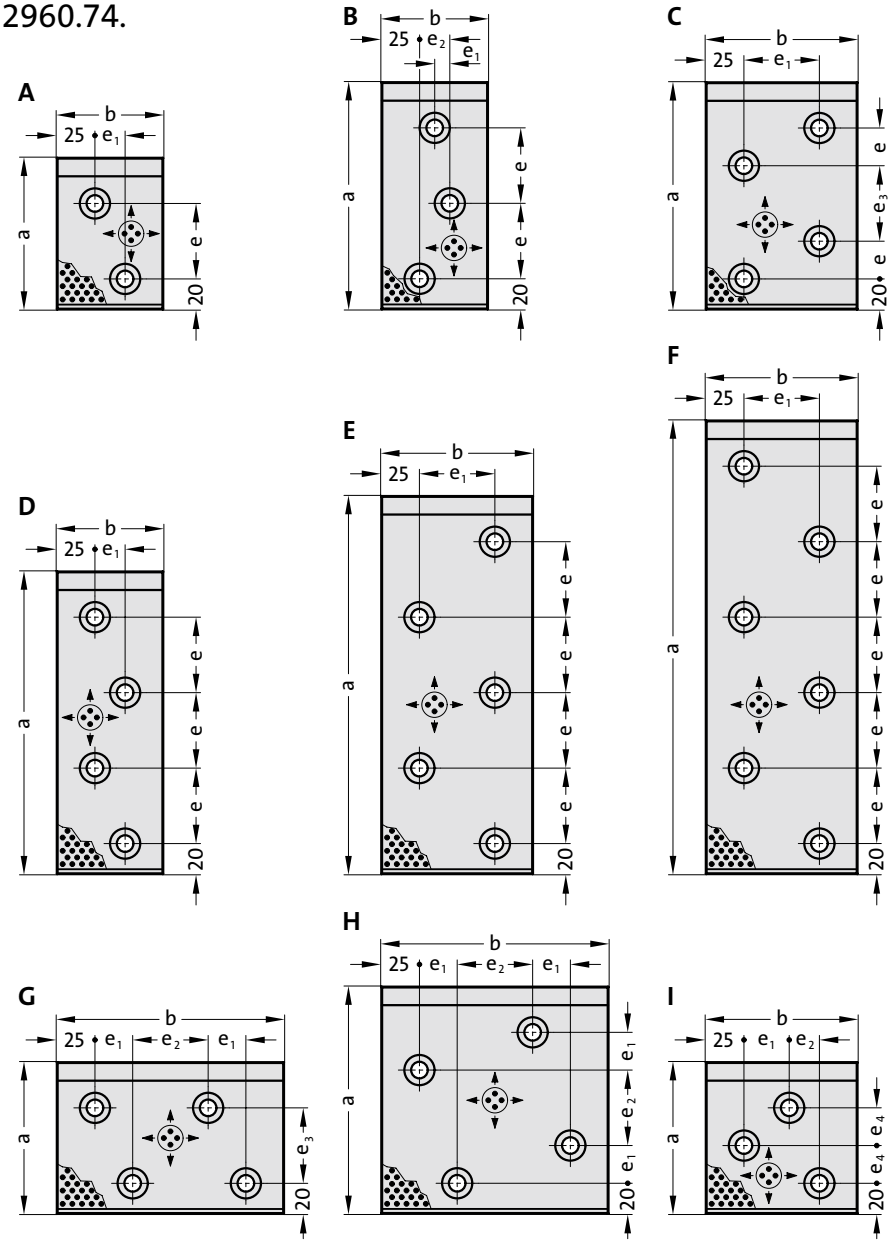

2960.74.

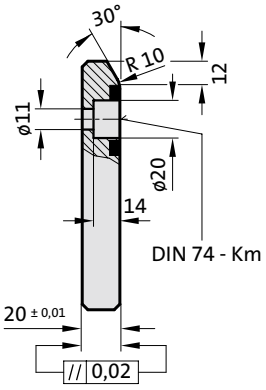

subject to alterations

2960.74. Sliding pad, Bronze with solid lubricant, AFNOR/ISO 9183-2

Order No	Shape	b	a	e	e_1	e_2	e_3	e_4	Number of screw holes
2960.74.070.100	A	70	100	50	20	-	-	-	2
2960.74.070.150	B	70	150	50	10	20	-	-	3
2960.74.070.200	D	70	200	50	20	-	-	-	4
2960.74.100.100	I	100	100	-	30	20	-	25	3
2960.74.100.150	C	100	150	25	50	-	50	-	4
2960.74.100.200	D	100	200	50	50	-	-	-	4
2960.74.100.250	E	100	250	50	50	-	-	-	5
2960.74.100.300	F	100	300	50	50	-	-	-	6
2960.74.150.100	G	150	100	-	25	50	50	-	4
2960.74.150.150	H	150	150	-	25	50	-	-	4
2960.74.150.200	D	150	200	50	100	-	-	-	4
2960.74.150.250	E	150	250	50	100	-	-	-	5
2960.74.150.300	F	150	300	50	100	-	-	-	6
2960.74.200.100	G	200	100	-	50	50	50	-	4

Sliding pad, Special cast iron (GG25) with solid lubricant, AFNOR/ISO 9183-2



Description:
Special cast iron with solid lubricant is a low-cost alternative, altthough absorption of the surface pressure is reduced by 60%.

Material:
Special cast iron (GG25) with solid lubricant.

Note:
Screws not included.

Fixing:
Use socket cap screws DIN EN ISO 4762 M10.

2960.75.

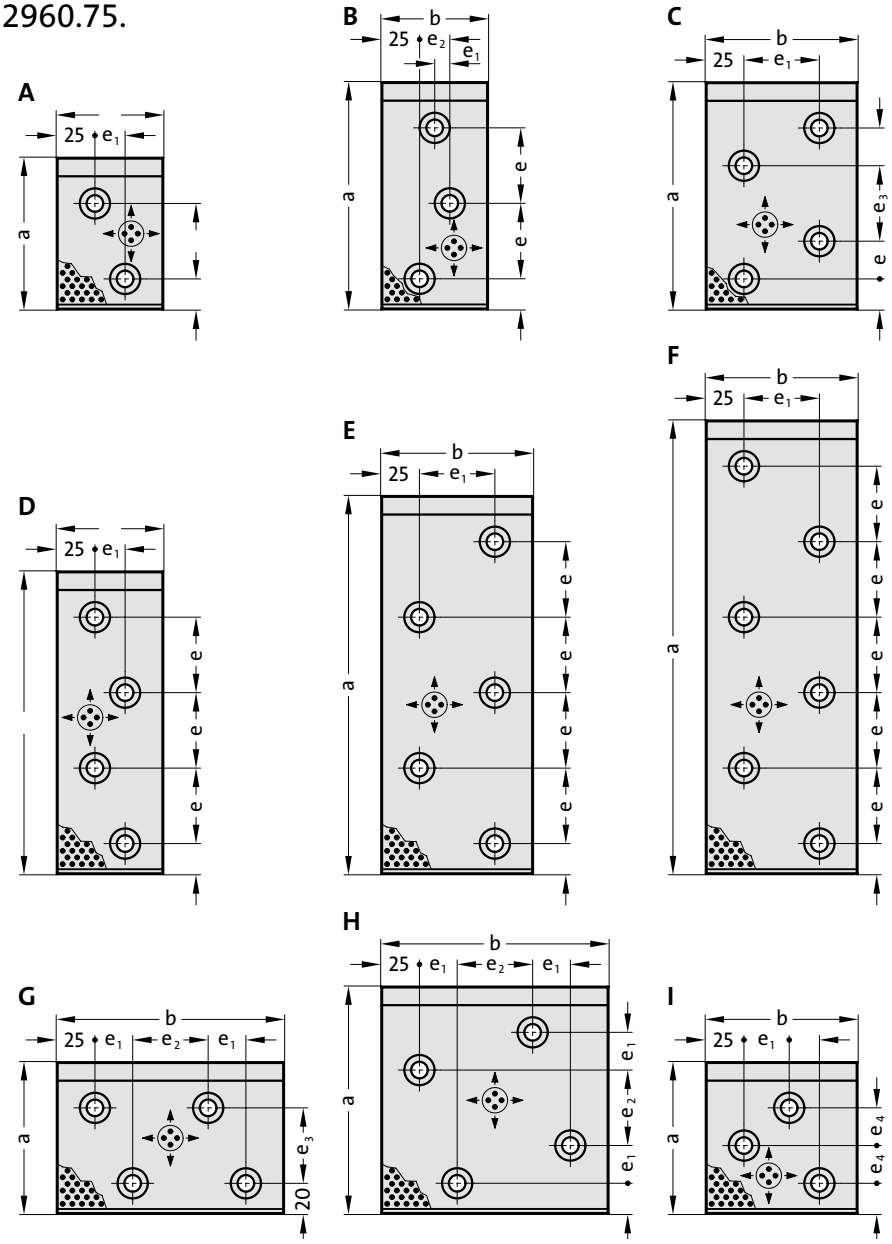

2960.75.

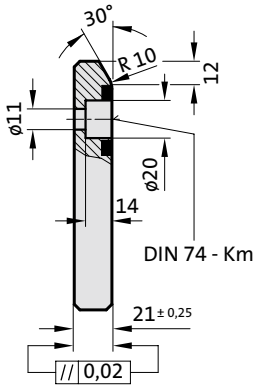

subject to alterations

Sliding pad, Special cast iron (GG25) with solid lubricant, AFNOR/ISO 9183-2

2960.75. Sliding pad, Special cast iron (GG25) with solid lubricant, AFNOR/ISO 9183-2

Order No	Shape	b	a	e	e_1	e_2	e_3	e_4	Number of screw holes
2960.75.070.100	A	70	100	50	20	-	-	-	2
2960.75.070.150	B	70	150	50	10	20	-	-	3
2960.75.070.200	D	70	200	50	20	-	-	-	4
2960.75.100.100	I	100	100	-	30	20	-	25	3
2960.75.100.150	C	100	150	25	50	-	50	-	4
2960.75.100.200	D	100	200	50	50	-	-	-	4
2960.75.100.250	E	100	250	50	50	-	-	-	5
2960.75.100.300	F	100	300	50	50	-	-	-	6
2960.75.150.100	G	150	100	-	25	50	50	-	4
2960.75.150.150	H	150	150	-	25	50	-	-	4
2960.75.150.200	D	150	200	50	100	-	-	-	4
2960.75.150.250	E	150	250	50	100	-	-	-	5
2960.75.150.300	F	150	300	50	100	-	-	-	6
2960.75.200.100	G	200	100	-	50	50	50	-	4

Sliding pad, Steel with oil groove, CNOMO



Material:
Steel, surface hardened

Note:
Screws not included.

Fixing:
Use socket cap screws DIN EN ISO 4762 M10.

2960.44.45.

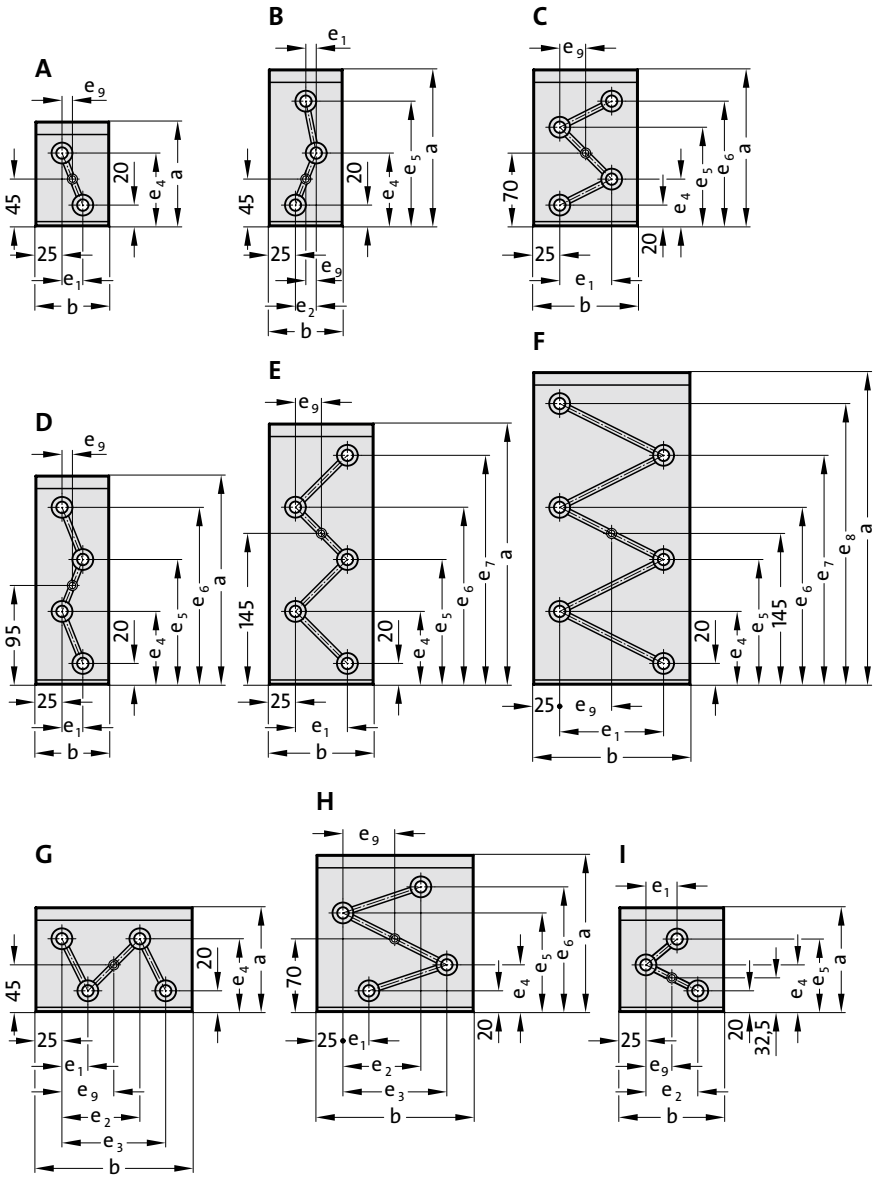

2960.44.45.

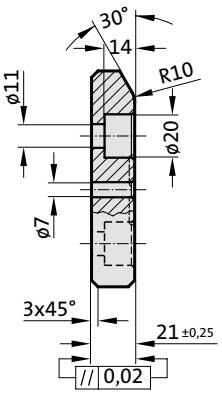

subject to alterations

Sliding pad, Steel with oil groove, CNOMO

2960.44.45. Sliding pad, Steel with oil groove, CNOMO

Order No	Shape	b	a	e_1	e_2	e_3	e_4	e_5	e_6	e_7	e_8	e_9	Number of screw holes
2960.44.45.070.100	A	70	100	20	-	-	70	-	-	-	-	10	2
2960.44.45.070.150	B	70	150	10	20	-	70	120	-	-	-	10	3
2960.44.45.070.200	D	70	200	20	-	-	70	120	170	-	-	10	4
2960.44.45.100.100	I	100	100	30	50	-	45	70	-	-	-	25	3
2960.44.45.100.150	C	100	150	50	-	-	45	95	120	-	-	25	4
2960.44.45.100.200	D	100	200	50	-	-	70	120	170	-	-	25	4
2960.44.45.100.250	E	100	250	50	-	-	70	120	170	220	-	25	5
2960.44.45.100.300	F	100	300	50	-	-	70	120	170	220	270	25	6
2960.44.45.150.100	G	150	100	25	75	100	70	-	-	-	-	50	4
2960.44.45.150.150	H	150	150	25	75	100	45	95	120	-	-	50	4
2960.44.45.150.200	D	150	200	100	-	-	70	120	170	-	-	50	4
2960.44.45.150.250	E	150	250	100	-	-	70	120	170	220	-	50	5
2960.44.45.150.300	F	150	300	100	-	-	70	120	170	220	270	50	6
2960.44.45.200.100	G	200	100	50	100	150	70	-	-	-	-	75	4

FIBRO

Sliding pad, Bronze with oil groove, CNOMO



2960.54.45.

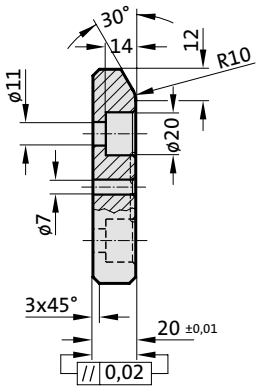

2960.54.45.

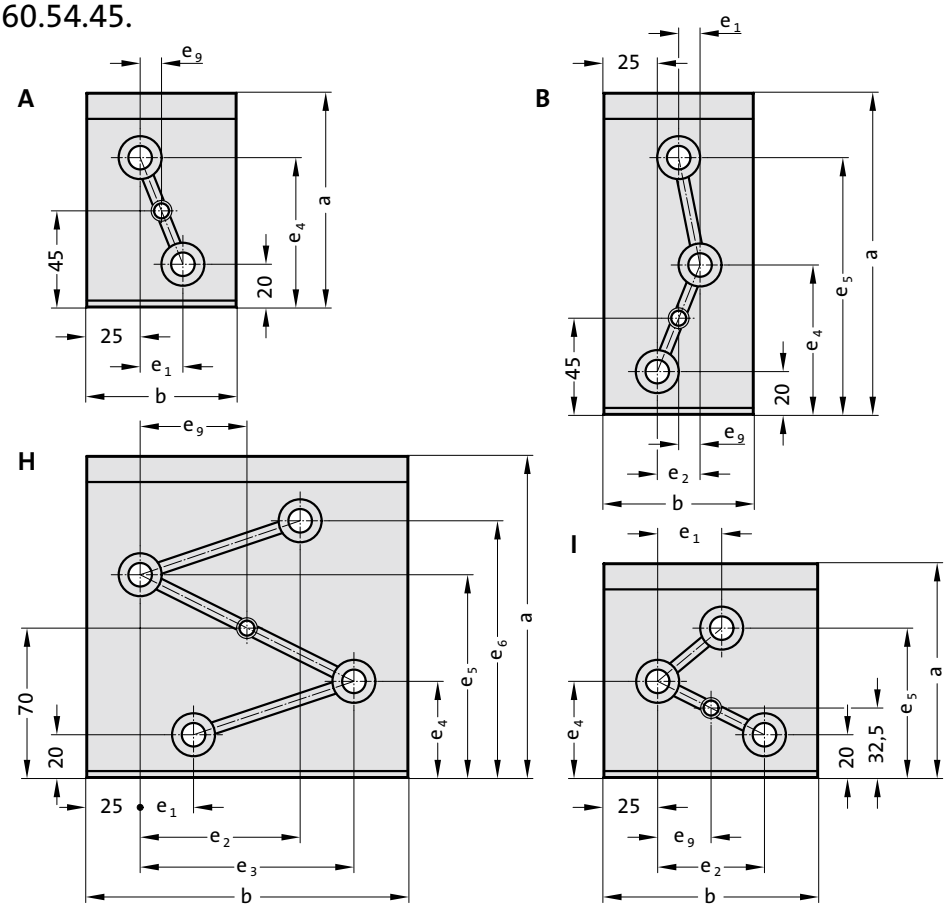

Material:
Bronze

Note:
Screws not included.

Fixing:
Use socket cap screws
DIN EN ISO 4762 M10.

2960.54.45. Sliding pad, Bronze with oil groove, CNOMO

Order No	Shape	b	a	e_1	e_2	e_3	e_4	e_5	e_6	e_9	Number of screw holes
2960.54.45.070.100	A	70	100	20	-	-	70	-	-	10	2
2960.54.45.070.150	B	70	150	10	20	-	70	120	-	10	3
2960.54.45.100.100	I	100	100	30	50	-	45	70	-	25	3
2960.54.45.150.150	H	150	150	25	75	100	45	95	120	50	4

subject to alterations

Sliding pad, Bronze with solid lubricant, VDI 3357

2960.81.

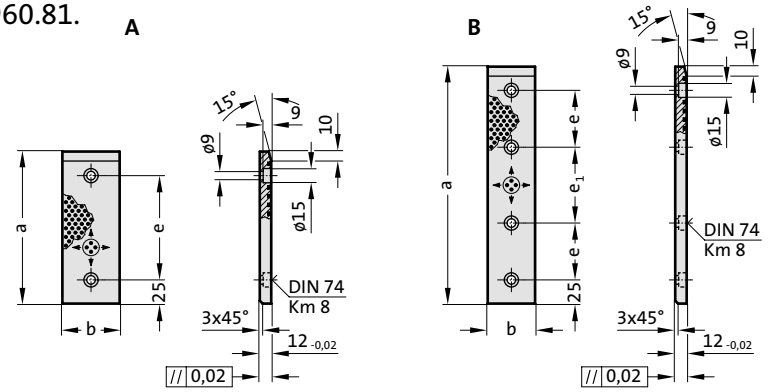



2960.81. Sliding pad, Bronze with solid lubricant, VDI 3357

Order No	Shape	b	a	e	e_1	Number of screw holes
2960.81.030.080	A	30	80	30	-	2
2960.81.030.100	A	30	100	50	-	2
2960.81.030.125	A	30	125	75	-	2
2960.81.030.160	A	30	160	110	-	2
2960.81.030.200	A	30	200	150	-	2
2960.81.030.225	A	30	225	175	-	2
2960.81.030.250	B	30	250	60	80	4
2960.81.030.260	B	30	260	60	90	4
2960.81.030.280	B	30	280	60	110	4
2960.81.030.300	B	30	300	80	90	4
2960.81.030.320	B	30	320	80	110	4
2960.81.040.080	A	40	80	30	-	2
2960.81.040.100	A	40	100	50	-	2
2960.81.040.125	A	40	125	75	-	2
2960.81.040.160	A	40	160	110	-	2
2960.81.040.200	A	40	200	150	-	2
2960.81.050.080	A	50	80	30	-	2
2960.81.050.100	A	50	100	50	-	2
2960.81.050.125	A	50	125	75	-	2
2960.81.050.160	A	50	160	110	-	2
2960.81.050.200	A	50	200	150	-	2
2960.81.050.225	A	50	225	175	-	2
2960.81.050.250	B	50	250	60	80	4
2960.81.050.300	B	50	300	80	90	4
2960.81.050.350	B	50	350	100	100	4
2960.81.050.400	B	50	400	120	110	4
2960.81.060.080	A	60	80	30	-	2
2960.81.060.100	A	60	100	50	-	2
2960.81.060.125	A	60	125	75	-	2
2960.81.060.160	A	60	160	110	-	2
2960.81.060.200	A	60	200	150	-	2
2960.81.060.225	A	60	225	175	-	2
2960.81.060.240	B	60	240	60	70	4
2960.81.060.250	B	60	250	60	80	4
2960.81.060.260	B	60	260	60	90	4
2960.81.060.280	B	60	280	60	110	4
2960.81.080.080	A	80	80	30	-	2
2960.81.080.100	A	80	100	50	-	2
2960.81.080.125	A	80	125	75	-	2
2960.81.080.160	A	80	160	110	-	2
2960.81.080.200	A	80	200	150	-	2
2960.81.080.225	A	80	225	175	-	2
2960.81.080.240	B	80	240	60	70	4
2960.81.080.250	B	80	250	60	80	4
2960.81.080.260	B	80	260	60	90	4
2960.81.080.280	B	80	280	60	110	4
2960.81.100.240	B	100	240	60	70	4
2960.81.100.260	B	100	260	60	90	4
2960.81.100.280	B	100	280	60	110	4

Material:
Bronze with solid lubricant, oilless lubricating

Note:
Screws not included.

Fixing:
Use socket cap screws DIN EN ISO 4762 M8.

FIBRO

Sliding pad, Steel, VDI 3357

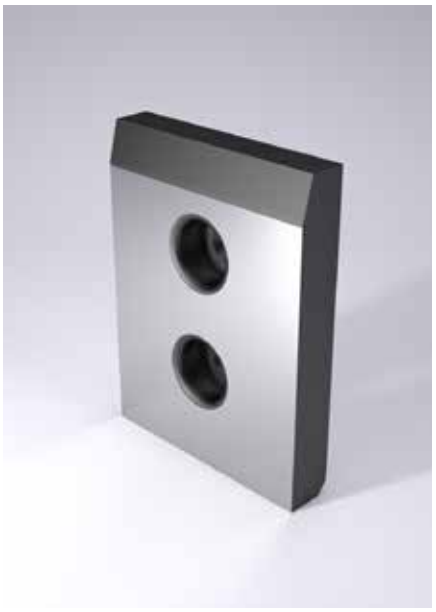

2960.88.

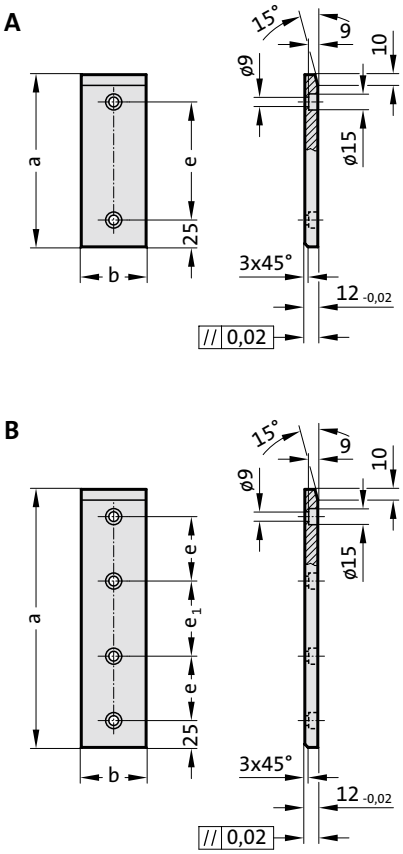

Material:
Steel, surface hardened

Note:
Screws not included.

Fixing:
Use socket cap screws DIN EN ISO 4762 M8.

Sliding pad, Steel, VDI 3357

2960.88. Sliding pad, Steel, VDI 3357

Order No	Shape	b	a	e	e_1	Number of screw holes
2960.88.030.080	A	30	80	30	-	2
2960.88.030.100	A	30	100	50	-	2
2960.88.030.125	A	30	125	75	-	2
2960.88.030.160	A	30	160	110	-	2
2960.88.030.200	A	30	200	150	-	2
2960.88.040.080	A	40	80	30	-	2
2960.88.040.100	A	40	100	50	-	2
2960.88.040.125	A	40	125	75	-	2
2960.88.040.160	A	40	160	110	-	2
2960.88.040.200	A	40	200	150	-	2
2960.88.040.225	A	40	225	175	-	2
2960.88.040.240	B	40	240	60	70	4
2960.88.040.250	B	40	250	60	80	4
2960.88.040.260	B	40	260	60	90	4
2960.88.040.280	B	40	280	60	110	4
2960.88.050.080	A	50	80	30	-	2
2960.88.050.100	A	50	100	50	-	2
2960.88.050.125	A	50	125	75	-	2
2960.88.050.160	A	50	160	110	-	2
2960.88.050.180	A	50	180	130	-	2
2960.88.050.200	A	50	200	150	-	2
2960.88.050.225	A	50	225	175	-	2
2960.88.050.240	B	50	240	60	70	4
2960.88.050.250	B	50	250	60	80	4
2960.88.050.260	B	50	260	60	90	4
2960.88.050.280	B	50	280	60	110	4
2960.88.060.080	A	60	80	30	-	2
2960.88.060.100	A	60	100	50	-	2
2960.88.060.125	A	60	125	75	-	2
2960.88.060.160	A	60	160	110	-	2
2960.88.060.200	A	60	200	150	-	2
2960.88.060.225	A	60	225	175	-	2
2960.88.060.240	B	60	240	60	70	4
2960.88.060.250	B	60	250	60	80	4
2960.88.060.260	B	60	260	60	90	4
2960.88.060.280	B	60	280	60	110	4
2960.88.060.300	B	60	300	80	90	4
2960.88.060.320	B	60	320	80	110	4
2960.88.060.340	B	60	340	80	130	4
2960.88.060.350	B	60	350	100	100	4
2960.88.080.080	A	80	80	30	-	2
2960.88.080.100	A	80	100	50	-	2
2960.88.080.125	A	80	125	75	-	2
2960.88.080.160	A	80	160	110	-	2
2960.88.080.200	A	80	200	150	-	2
2960.88.080.225	A	80	225	175	-	2
2960.88.080.240	B	80	240	60	70	4
2960.88.080.250	B	80	250	60	80	4
2960.88.080.260	B	80	260	60	90	4
2960.88.080.280	B	80	280	60	110	4
2960.88.080.300	B	80	300	80	90	4
2960.88.080.320	B	80	320	80	110	4
2960.88.080.340	B	80	340	80	130	4
2960.88.080.350	B	80	350	100	100	4
2960.88.100.250	B	100	250	60	80	4
2960.88.100.280	B	100	280	60	110	4
2960.88.100.300	B	100	300	80	90	4
2960.88.100.320	B	100	320	80	110	4
2960.88.100.340	B	100	340	80	130	4
2960.88.100.350	B	100	350	100	100	4

Sliding Pad, Bronze with solid lubricant, VDI 3357



2960.93.

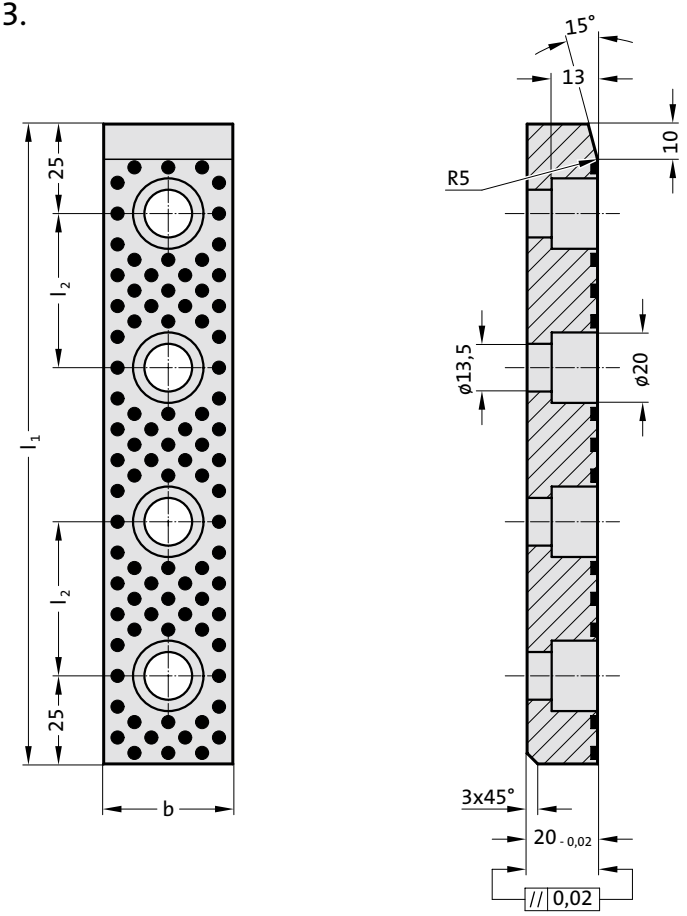

Material:
Bronze with solid lubricant, oilless lubricating

Note:
Screws not included.

Fixing:
Use socket cap screws DIN EN ISO 4762 M12.

2960.93. Sliding Pad, Bronze with solid lubricant, VDI 3357

Order No	b	l_1	l_2
2960.93.050.250	50	250	60
2960.93.050.300	50	300	80
2960.93.050.350	50	350	100
2960.93.050.400	50	400	120
2960.93.050.450	50	450	140
2960.93.050.500	50	500	150
2960.93.080.250	80	250	60
2960.93.080.300	80	300	80
2960.93.080.350	80	350	100
2960.93.080.400	80	400	120
2960.93.080.450	80	450	140
2960.93.080.500	80	500	150
2960.93.100.250	100	250	60
2960.93.100.300	100	300	80
2960.93.100.350	100	350	100
2960.93.100.400	100	400	120
2960.93.100.450	100	450	140
2960.93.100.500	100	500	150
2960.93.125.250	125	250	60
2960.93.125.300	125	300	80
2960.93.125.350	125	350	100
2960.93.125.400	125	400	120
2960.93.125.450	125	450	140
2960.93.125.500	125	500	150
2960.93.160.250	160	250	60
2960.93.160.300	160	300	80
2960.93.160.350	160	350	100
2960.93.160.400	160	400	120
2960.93.160.450	160	450	140
2960.93.160.500	160	500	150

subject to alterations

Guide bar with two sliding surfaces, Bronze with solid lubricant, VDI 3357

2962.75.

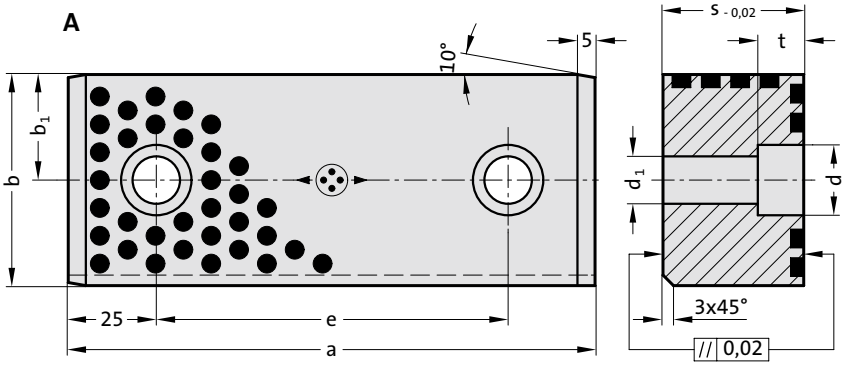



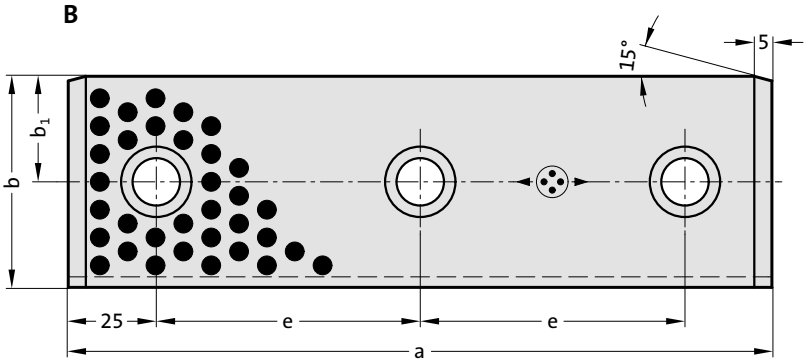

Material:
Bronze with solid lubricant, oilless lubricating

Note:
Screws not included.

Fixing:
Use socket cap screws
DIN EN ISO 4762.

2962.75. Guide bar with two sliding surfaces, Bronze with solid lubricant, VDI 3357

Order No	Shape	a	b	s	b_1	e	d	d_1	t	Number of screw holes
2962.75.025.012.0110	A	110	25	12	12.5	60	15	9	8.5	2
2962.75.025.012.0120	A	120	25	12	12.5	70	15	9	8.5	2
2962.75.025.015.0110	A	110	25	15	12.5	60	18	11	10.5	2
2962.75.025.015.0120	A	120	25	15	12.5	70	18	11	10.5	2
2962.75.060.030.0125	A	125	60	30	30	75	20	13.5	13	2
2962.75.060.030.0150	A	150	60	30	30	100	20	13.5	13	2
2962.75.060.030.0160	A	160	60	30	30	110	20	13.5	13	2
2962.75.060.030.0200	B	200	60	30	30	75	20	13.5	13	3
2962.75.060.040.0125	A	125	60	40	30	75	20	13.5	13	2
2962.75.060.040.0150	A	150	60	40	30	100	20	13.5	13	2
2962.75.060.040.0160	A	160	60	40	30	110	20	13.5	13	2
2962.75.060.040.0200	B	200	60	40	30	75	20	13.5	13	3

Guide bar with two sliding surfaces, Bronze with solid lubricant, CNOMO



2962.75.45.

A

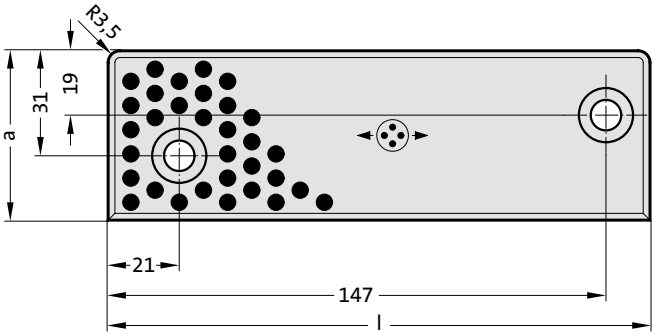

2962.75.45.

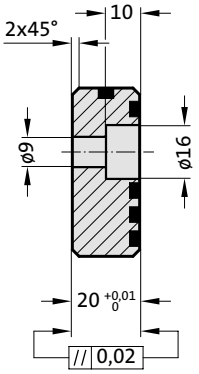

B

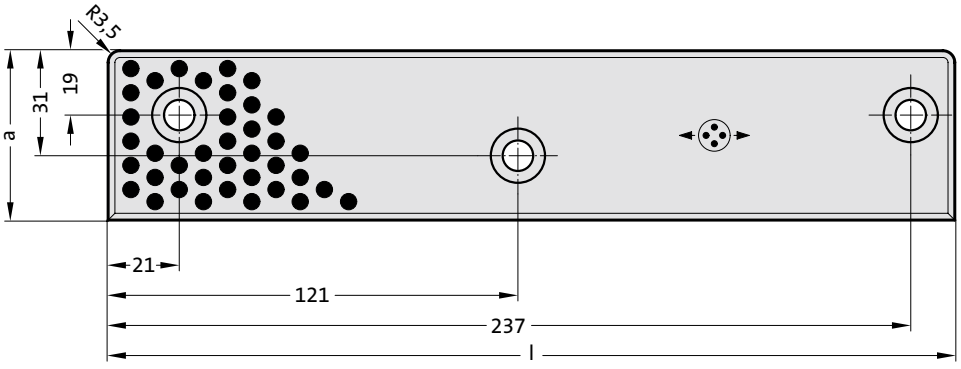

Material:
Bronze with solid lubricant, oilless lubricating

Note:
Screws not included.

Fixing:
Use socket cap screws DIN EN ISO 4762 M8.

2962.75.45. Guide bar with two sliding surfaces, Bronze with solid lubricant, CNOMO

Order No	Shape	a	l	Number of screw holes
2962.75.45.050.20.160	A	50	160	2
2962.75.45.050.20.200	B	50	250	3

subject to alterations

Guide bar with three sliding surfaces, Bronze with solid lubricant

2962.76.

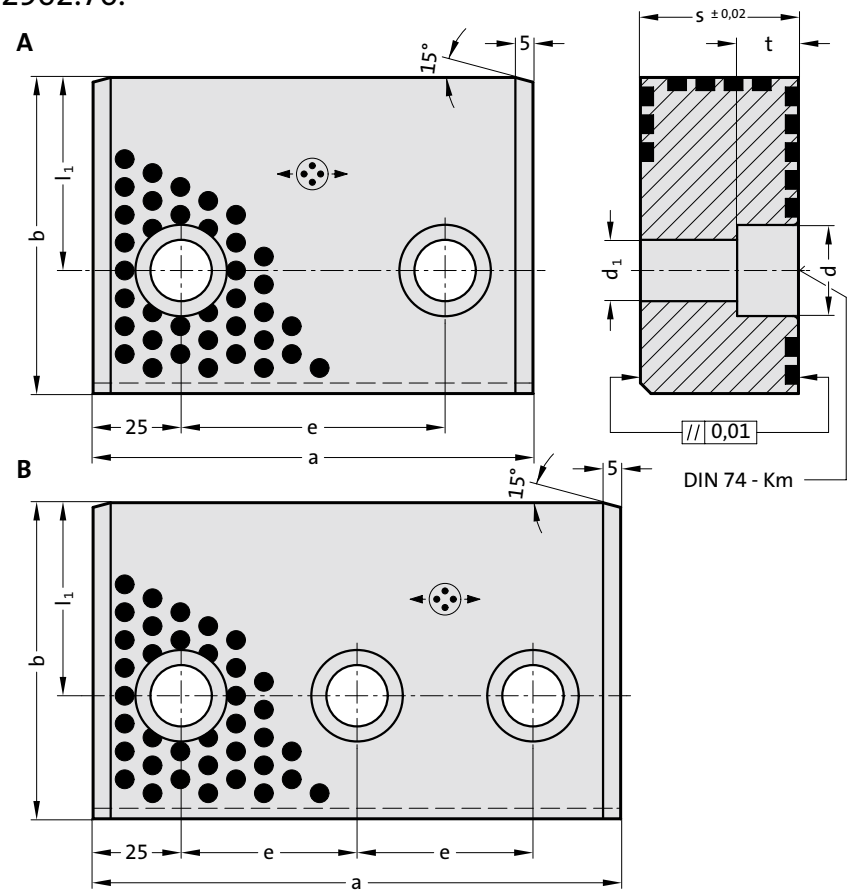



Material:
Bronze with solid lubricant, oilless lubricating

Note:
Screws not included.

Fixing:
Use socket cap screws DIN EN ISO 4762.

2962.76. Guide bar with three sliding surfaces, Bronze with solid lubricant

Order No	Shape	a	b	s	e	l_1	d	d_1	t	Number of screw holes
2962.76.070.032.0125	A	125	70	32	75	40	20	13.5	13	2
2962.76.070.032.0150	A	150	70	32	100	40	20	13.5	13	2
2962.76.070.032.0200	B	200	70	32	75	40	20	13.5	13	3
2962.76.090.045.0125	A	125	90	45	75	55	26	17.5	17.5	2
2962.76.090.045.0150	B	150	90	45	50	55	26	17.5	17.5	3
2962.76.090.045.0200	B	200	90	45	75	55	26	17.5	17.5	3

Guide bar with two sliding surfaces, Bronze with solid lubricant



2962.77.

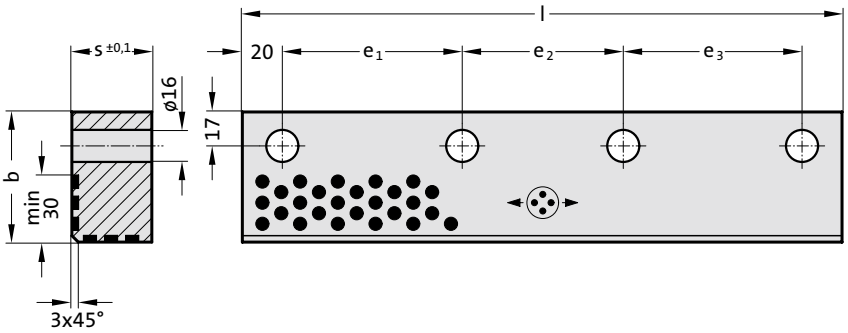

Material:
Bronze with solid lubricant, oilless lubricating

Note:
Screws not included.

2962.77. Guide bar with two sliding surfaces, Bronze with solid lubricant

Order No	b	s	l	e_1	e_2	e_3	Number of screw holes
2962.77.065.040.0150	65	40	150	110	-	-	2
2962.77.065.040.0200	65	40	200	80	80	-	3
2962.77.065.040.0250	65	40	250	105	105	-	3
2962.77.065.040.0300	65	40	300	90	80	90	4
2962.77.065.040.0350	65	40	350	105	100	105	4
2962.77.065.065.0150	65	65	150	110	-	-	2
2962.77.065.065.0200	65	65	200	80	80	-	3
2962.77.065.065.0250	65	65	250	105	105	-	3
2962.77.065.065.0300	65	65	300	90	80	90	4
2962.77.065.065.0350	65	65	350	105	105	105	4

Guide bar with four sliding surfaces, Bronze with solid lubricant

2962.74.

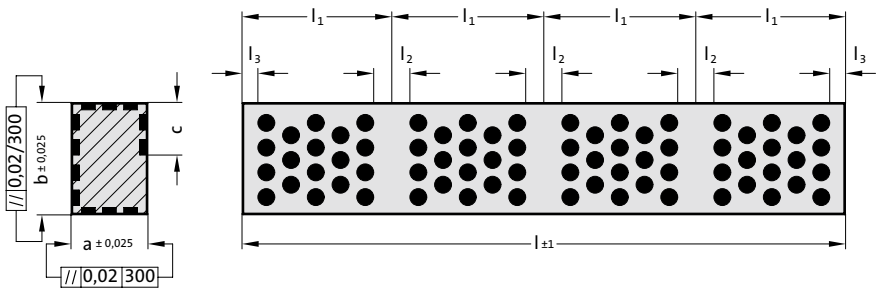



2962.74. Guide bar with four sliding surfaces, Bronze with solid lubricant

Material:
Bronze with solid lubricant, oilless lubricating

Order No	a	b	c	l	l_1	l_2	l_3
2962.74.015.010.075	10.3	15.3	6	75	25	6	3
2962.74.015.010.100	10.3	15.3	6	100	25	6	3
2962.74.015.010.125	10.3	15.3	6	125	25	6	3
2962.74.015.010.150	10.3	15.3	6	150	25	6	3
2962.74.015.010.175	10.3	15.3	6	175	25	6	3
2962.74.015.010.200	10.3	15.3	6	200	25	6	3
2962.74.015.010.225	10.3	15.3	6	225	25	6	3
2962.74.015.010.250	10.3	15.3	6	250	25	6	3
2962.74.015.010.275	10.3	15.3	6	275	25	6	3
2962.74.015.010.300	10.3	15.3	6	300	25	6	3
2962.74.025.015.105	15.3	25.3	8	105	35	8	4
2962.74.025.015.140	15.3	25.3	8	140	35	8	4
2962.74.025.015.175	15.3	25.3	8	175	35	8	4
2962.74.025.015.210	15.3	25.3	8	210	35	8	4
2962.74.025.015.245	15.3	25.3	8	245	35	8	4
2962.74.025.015.280	15.3	25.3	8	280	35	8	4
2962.74.025.015.315	15.3	25.3	8	315	35	8	4
2962.74.025.015.350	15.3	25.3	8	350	35	8	4
2962.74.025.015.385	15.3	25.3	8	385	35	8	4
2962.74.025.015.420	15.3	25.3	8	420	35	8	4
2962.74.025.015.455	15.3	25.3	8	455	35	8	4
2962.74.025.015.490	15.3	25.3	8	490	35	8	4
2962.74.035.025.135	25.3	35.3	12	135	45	10	5
2962.74.035.025.180	25.3	35.3	12	180	45	10	5
2962.74.035.025.225	25.3	35.3	12	225	45	10	5
2962.74.035.025.270	25.3	35.3	12	270	45	10	5
2962.74.035.025.315	25.3	35.3	12	315	45	10	5
2962.74.035.025.360	25.3	35.3	12	360	45	10	5
2962.74.035.025.405	25.3	35.3	12	405	45	10	5
2962.74.035.025.450	25.3	35.3	12	450	45	10	5
2962.74.035.025.495	25.3	35.3	12	495	45	10	5
2962.74.045.035.165	35.3	45.3	16	165	55	12	6
2962.74.045.035.220	35.3	45.3	16	220	55	12	6
2962.74.045.035.275	35.3	45.3	16	275	55	12	6
2962.74.045.035.330	35.3	45.3	16	330	55	12	6
2962.74.045.035.385	35.3	45.3	16	385	55	12	6
2962.74.045.035.440	35.3	45.3	16	440	55	12	6
2962.74.045.035.495	35.3	45.3	16	495	55	12	6

Guide bar with one sliding surfaces, Bronze with solid lubricant



2962.79.

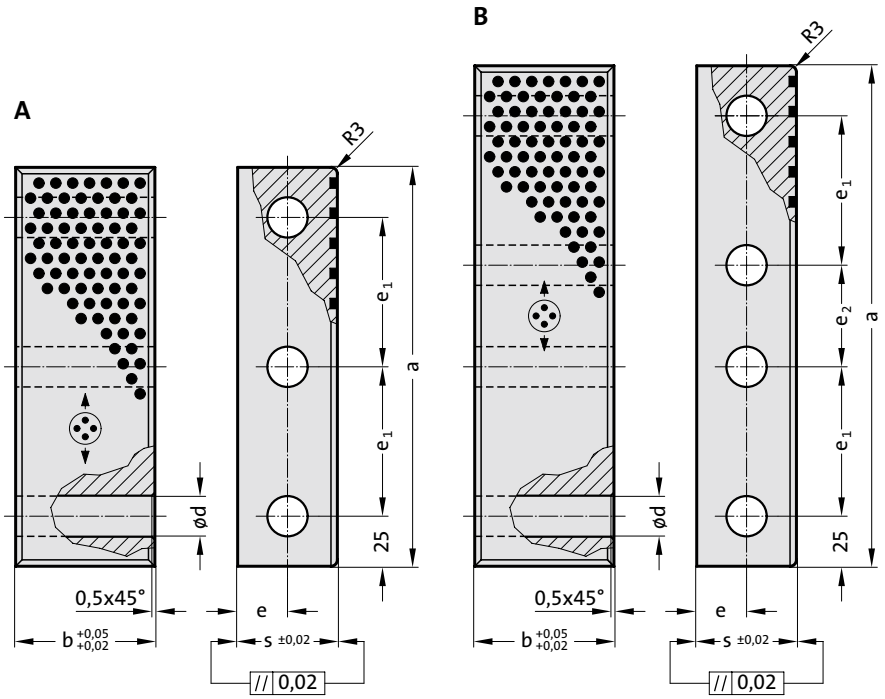

Material:

Bronze with solid lubricant, oilless lubricating

Note:

Screws not included.

2962.79. Guide bar with one sliding surfaces, Bronze with solid lubricant

Order No	Shape	b	s	a	e	e_1	e_2	d	Number of screw holes
2962.79.030.040.150	A	30	40	150	20	50	-	14	3
2962.79.030.040.200	A	30	40	200	20	75	-	14	3
2962.79.030.040.250	B	30	40	250	20	75	50	14	4
2962.79.040.040.150	A	40	40	150	20	50	-	14	3
2962.79.040.040.200	A	40	40	200	20	75	-	14	3
2962.79.040.040.250	B	40	40	250	20	75	50	14	4
2962.79.045.050.150	A	45	50	150	25	50	-	18	3
2962.79.045.050.200	A	45	50	200	25	75	-	18	3
2962.79.045.050.250	B	45	50	250	25	75	50	18	4
2962.79.055.050.150	A	55	50	150	25	50	-	18	3
2962.79.055.050.200	A	55	50	200	25	75	-	18	3
2962.79.055.050.250	B	55	50	250	25	75	50	18	4
2962.79.060.050.150	A	60	50	150	25	50	-	18	3
2962.79.060.050.200	A	60	50	200	25	75	-	18	3
2962.79.060.050.250	B	60	50	250	25	75	50	18	4
2962.79.070.050.150	A	70	50	150	25	50	-	18	3
2962.79.070.050.200	A	70	50	200	25	75	-	18	3
2962.79.070.050.250	B	70	50	250	25	75	50	18	4

Guide bar with three sliding surfaces, Bronze with solid lubricant

2962.80.



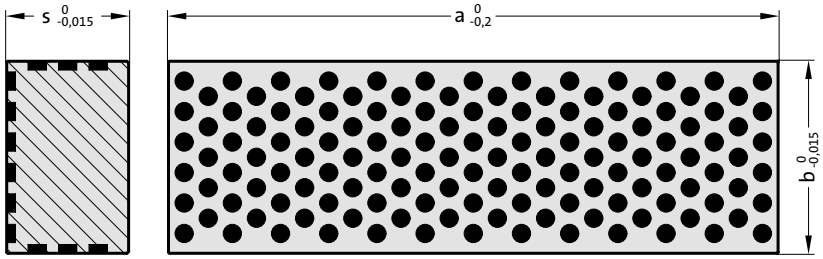

2962.80. Guide bar with three sliding surfaces, Bronze with solid lubricant

Order No	b	s	a
2962.80.025.016.080	25	16	80
2962.80.025.016.100	25	16	100
2962.80.025.016.125	25	16	125
2962.80.040.025.125	40	25	125
2962.80.040.025.160	40	25	160
2962.80.040.025.200	40	25	200
2962.80.063.040.200	63	40	200
2962.80.063.040.250	63	40	250
2962.80.063.040.315	63	40	315

Material:

Bronze with solid lubricant, oilless lubricating

Guide bracket, Steel with solid lubricant, VDI 3387



2960.73.

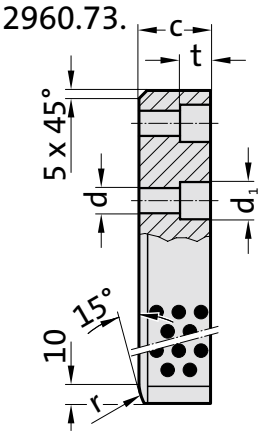

2960.73.

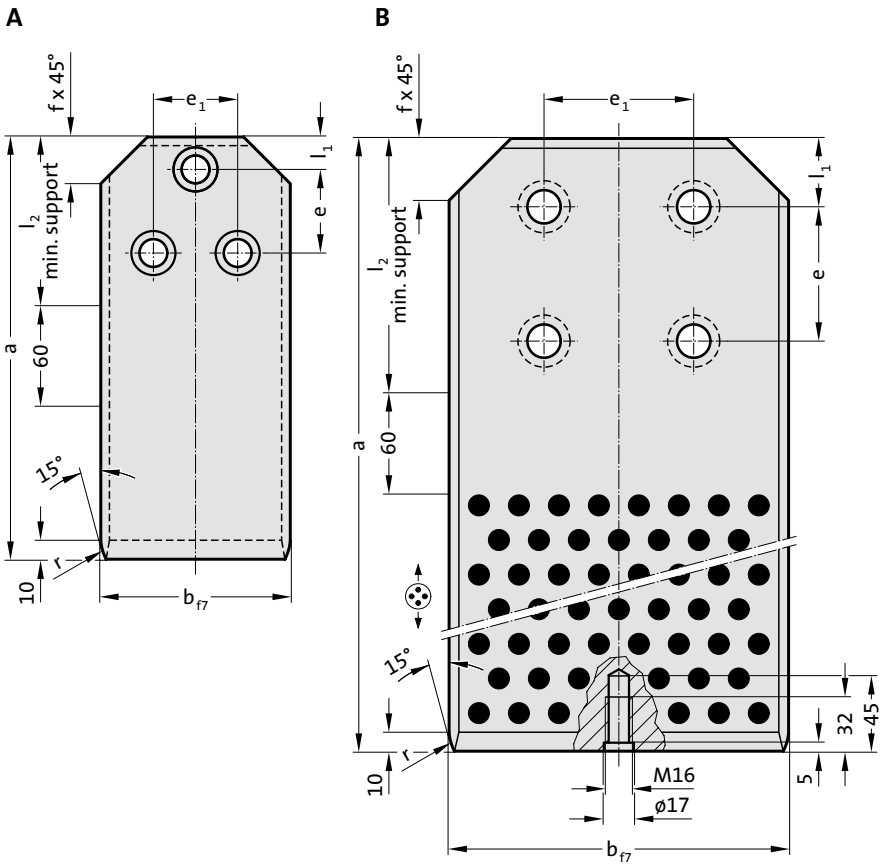

Material:

Steel, surface hardened. Sliding faces with embedded solid lubricant.

Note:

Screws not included.

Fixing:

Use socket cap screws DIN EN ISO 4762.

2960.73. Guide bracket, Steel with solid lubricant, VDI 3387

Order No	Shape	b	a	c	l_1	l_2	e	e_1	d	d_1	f	t	r	Number of screw holes
2960.73.063.180.036	A	63	180	36	20	90	50	36	14	20	18	16	16	3
2960.73.063.200.036	A	63	200	36	20	90	50	36	14	20	18	16	16	3
2960.73.063.224.036	A	63	224	36	20	90	50	36	14	20	18	16	16	3
2960.73.071.180.036	A	71	180	36	20	90	50	36	14	20	18	16	16	3
2960.73.071.200.036	A	71	200	36	20	90	50	36	14	20	18	16	16	3
2960.73.071.224.036	A	71	224	36	20	90	50	36	14	20	18	16	16	3
2960.73.090.200.045	A	90	200	45	20	100	50	50	18	26	28	21	25	3
2960.73.090.224.045	A	90	224	45	20	100	50	50	18	26	28	21	25	3
2960.73.090.250.045	A	90	250	45	20	100	50	50	18	26	28	21	25	3
2960.73.112.200.045	A	112	200	45	20	100	50	50	18	26	28	21	25	3
2960.73.112.224.045	A	112	224	45	20	100	50	50	18	26	28	21	25	3
2960.73.112.250.045	A	112	250	45	20	100	50	50	18	26	28	21	25	3
2960.73.140.315.045	B	140	315	45	40	150	80	90	22	33	36	25.5	31.5	4
2960.73.140.400.045	B	140	400	45	40	150	80	90	22	33	36	25.5	31.5	4
2960.73.140.400.056	B	140	400	56	40	150	80	90	22	33	36	25.5	31.5	4
2960.73.190.400.056	B	190	400	56	40	150	80	90	22	33	36	25.5	31.5	4
2960.73.240.500.056	B	240	500	56	40	250	160	160	26	40	36	30.5	31.5	4
2960.73.240.630.056	B	240	630	56	40	250	160	160	26	40	36	30.5	31.5	4

subject to alterations

Guide bracket, Bronze with solid lubricant, VDI 3387

2960.89.

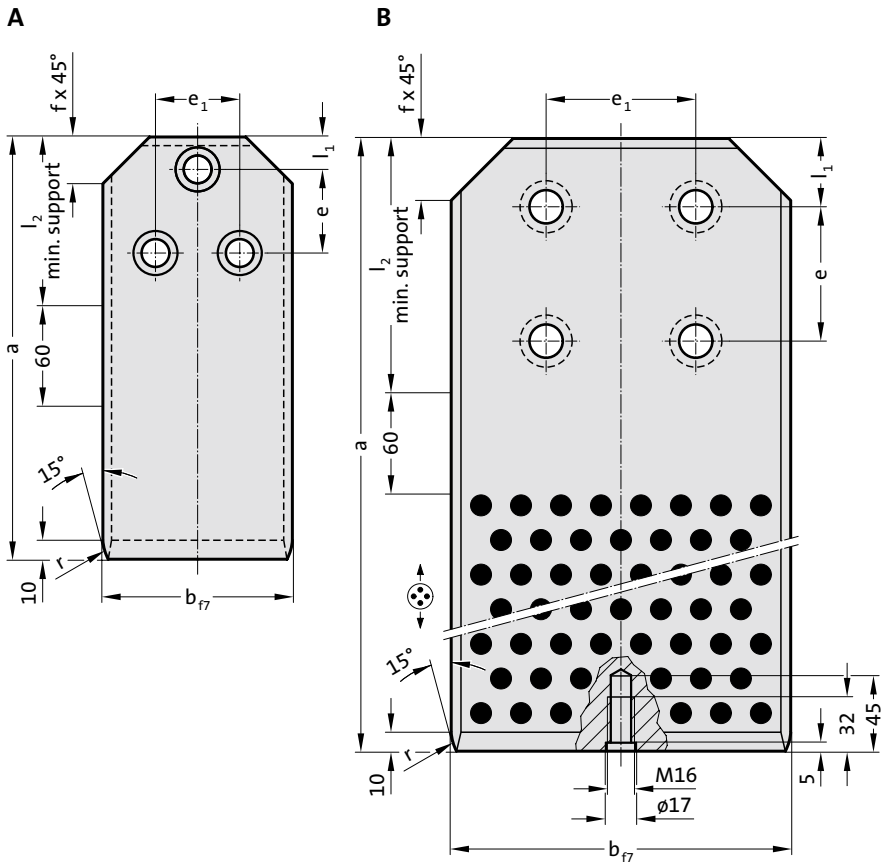



2960.89.

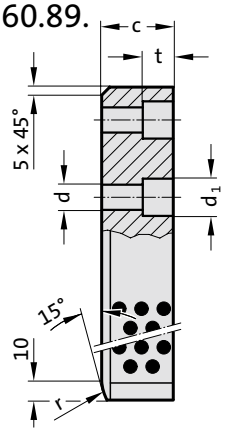

2960.89. Guide bracket, Bronze with solid lubricant, VDI 3387

Order No	Shape	b	a	l_1	l_2	e	e_1	d	d_1	f	c	t	r	Number of screw holes
2960.89.063.180	A	63	180	20	90	50	36	14	20	18	36	16	16	3
2960.89.063.200	A	63	200	20	90	50	36	14	20	18	36	16	16	3
2960.89.063.224	A	63	224	20	90	50	36	14	20	18	36	16	16	3
2960.89.071.180	A	71	180	20	90	50	36	14	20	18	36	16	16	3
2960.89.071.200	A	71	200	20	90	50	36	14	20	18	36	16	16	3
2960.89.071.224	A	71	224	20	90	50	36	14	20	18	36	16	16	3
2960.89.090.200	A	90	200	20	100	50	50	18	26	28	45	21	25	3
2960.89.090.224	A	90	224	20	100	50	50	18	26	28	45	21	25	3
2960.89.090.250	A	90	250	20	100	50	50	18	26	28	45	21	25	3
2960.89.112.200	A	112	200	20	100	50	50	18	26	28	45	21	25	3
2960.89.112.224	A	112	224	20	100	50	50	18	26	28	45	21	25	3
2960.89.112.250	A	112	250	20	100	50	50	18	26	28	45	21	25	3
2960.89.140.315	B	140	315	40	150	80	90	22	33	36	45	25.5	31.5	4
2960.89.190.400	B	190	400	40	150	80	90	22	33	36	56	25.5	31.5	4
2960.89.240.500	B	240	500	40	250	160	160	26	40	36	56	30.5	31.5	4
2960.89.240.630	B	240	630	40	250	160	160	26	40	36	56	30.5	31.5	4

Material:

Bronze with solid lubricant, oilless lubricating

Note:

Screws not included.

Fixing:

Use socket cap screws DIN EN ISO 4762.

Slide centre guide, Bronze with solid lubricant



2966.72.

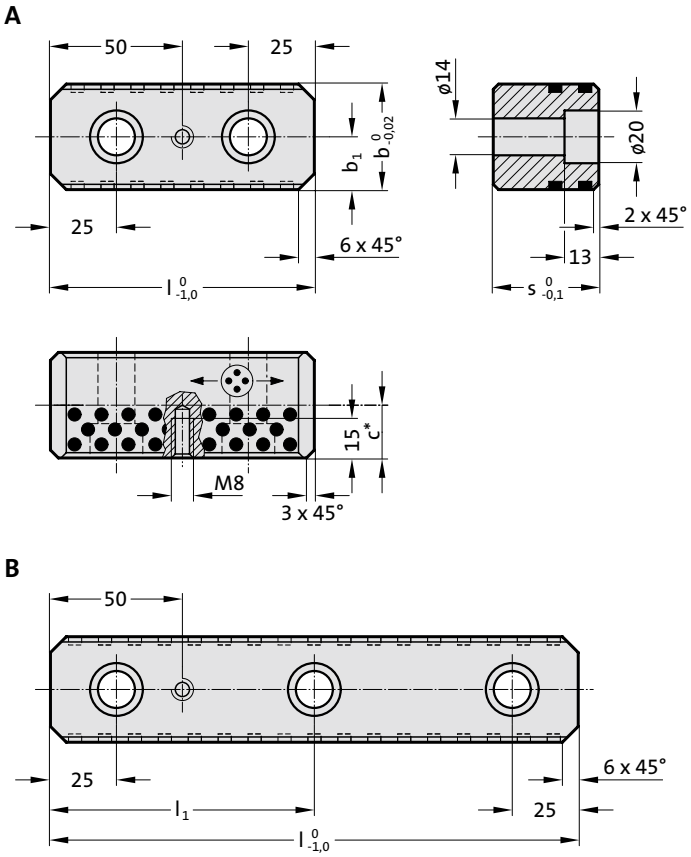

Material:
Bronze with solid lubricant, oilless lubricating

Note:
Screws not included.

Fixing:
Use socket cap screws DIN EN ISO 4762 M12.

2966.72. Slide centre guide, Bronze with solid lubricant

Order No	Shape	b	l	s	b_1	l_1	c*	Number of screw holes
2966.72.030.100.030	A	30	100	30	15	-	18	2
2966.72.030.150.030	A	30	150	30	15	-	18	2
2966.72.030.200.030	B	30	200	30	15	100	18	3
2966.72.030.250.030	B	30	250	30	15	125	18	3
2966.72.030.300.030	B	30	300	30	15	150	18	3
2966.72.030.350.030	B	30	350	30	15	175	18	3
2966.72.040.100.030	A	40	100	30	20	-	18	2
2966.72.040.150.030	A	40	150	30	20	-	18	2
2966.72.040.200.030	B	40	200	30	20	100	18	3
2966.72.040.250.030	B	40	250	30	20	125	18	3
2966.72.040.300.030	B	40	300	30	20	150	18	3
2966.72.040.350.030	B	40	350	30	20	175	18	3
2966.72.040.100.040	A	40	100	40	20	-	20	2
2966.72.040.150.040	A	40	150	40	20	-	20	2
2966.72.040.200.040	B	40	200	40	20	100	20	3
2966.72.040.250.040	B	40	250	40	20	125	20	3
2966.72.040.300.040	B	40	300	40	20	150	20	3
2966.72.040.350.040	B	40	350	40	20	175	20	3

*Solid lubricant area

subject to alterations

Overrun Cam, Steel hardened, VDI 3357

2960.90.



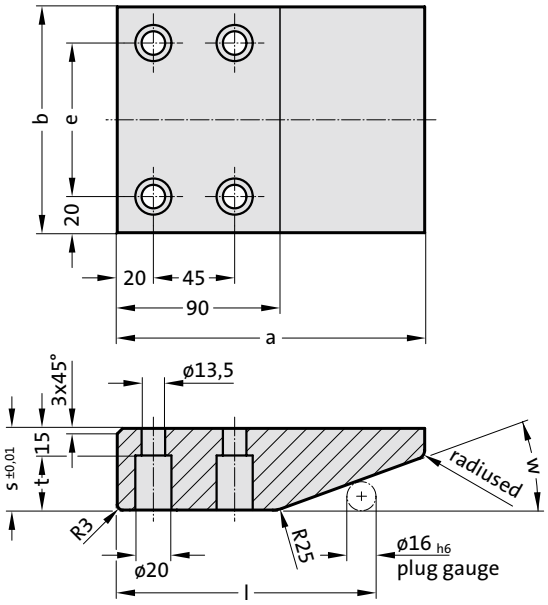

Mounting example

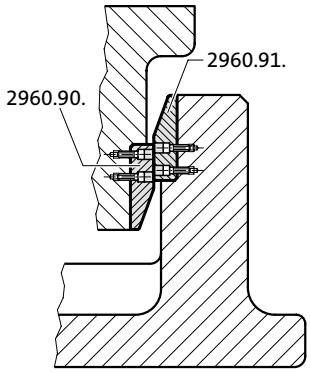

2960.90. Overrun Cam, Steel hardened, VDI 3357

Order No	b	a	s	e	t	w	l
2960.90.100.170.045	100	170	45	60	30	20	143.37
2960.90.125.170.045	125	170	45	85	30	20	143.37
2960.90.150.170.045	150	170	45	110	30	20	143.37
2960.90.200.170.045	200	170	45	160	30	20	143.37
2960.90.100.150.045	100	150	45	60	30	30	127.86
2960.90.100.170.060	100	170	60	60	45	30	127.86
2960.90.125.150.045	125	150	45	85	30	30	127.86
2960.90.125.170.060	125	170	60	85	45	30	127.86
2960.90.150.150.045	150	150	45	110	30	30	127.86
2960.90.150.170.060	150	170	60	110	45	30	127.86
2960.90.200.150.045	200	150	45	160	30	30	127.86
2960.90.200.170.060	200	170	60	160	45	30	127.86

Material:
Steel, through-hardened

Note:
Screws not included.

Fixing:
Use socket cap screws
DIN EN ISO 4762 M12.

Overrun Cam, Steel hardened and gas nitrided, VDI 3357



2960.91.

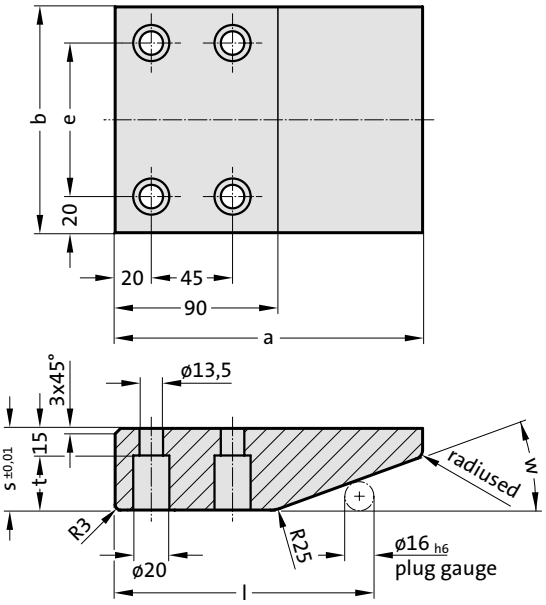

Mounting example

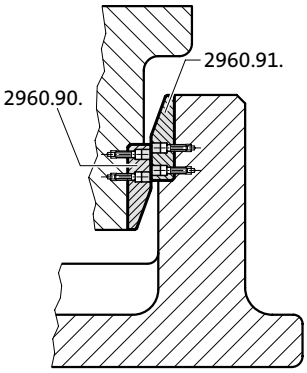

Material:

Steel, through-hardened and gas nitrided

Note:

Screws not included.

Fixing:

Use socket cap screws
DIN EN ISO 4762 M12.

2960.91. Overrun Cam, Steel hardened and gas nitrided, VDI 3357

Order No	b	a	s	e	t	w	l
2960.91.100.170.045	100	170	45	60	30	20	143.37
2960.91.125.170.045	125	170	45	85	30	20	143.37
2960.91.150.170.045	150	170	45	110	30	20	143.37
2960.91.200.170.045	200	170	45	160	30	20	143.37
2960.91.100.150.045	100	150	45	60	30	30	127.86
2960.91.100.170.060	100	170	60	60	45	30	127.86
2960.91.125.150.045	125	150	45	85	30	30	127.86
2960.91.125.170.060	125	170	60	85	45	30	127.86
2960.91.150.150.045	150	150	45	110	30	30	127.86
2960.91.150.170.060	150	170	60	110	45	30	127.86
2960.91.200.150.045	200	150	45	160	30	30	127.86
2960.91.200.170.060	200	170	60	160	45	30	127.86

subject to alterations

Overrun Cam, Bronze with solid lubricant, VDI 3357

2960.92.



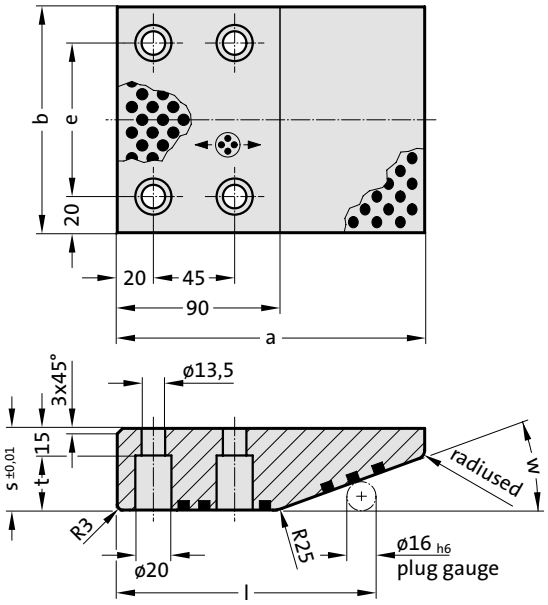

Mounting example

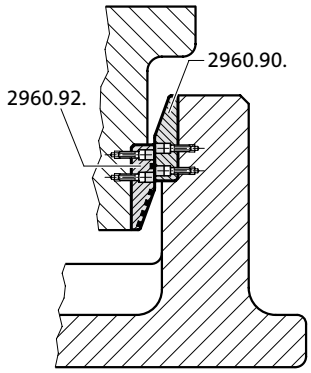

2960.92. Overrun Cam, Bronze with solid lubricant, VDI 3357

Order No	b	a	s	e	t	w	l
2960.92.100.170.045	100	170	45	60	30	20	143.37
2960.92.125.170.045	125	170	45	85	30	20	143.37
2960.92.150.170.045	150	170	45	110	30	20	143.37
2960.92.200.170.045	200	170	45	160	30	20	143.37
2960.92.100.150.045	100	150	45	60	30	30	127.86
2960.92.100.170.060	100	170	60	60	45	30	127.86
2960.92.125.150.045	125	150	45	85	30	30	127.86
2960.92.125.170.060	125	170	60	85	45	30	127.86
2960.92.150.150.045	150	150	45	110	30	30	127.86
2960.92.150.170.060	150	170	60	110	45	30	127.86
2960.92.200.150.045	200	150	45	160	30	30	127.86
2960.92.200.170.060	200	170	60	160	45	30	127.86

Material:

Bronze with solid lubricant, oilless lubricating

Note:

Screws not included.

Fixing:

Use socket cap screws DIN EN ISO 4762 M12.

Angled guide gib, Bronze with solid lubricant



2962.70.

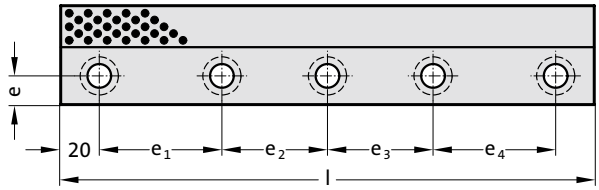

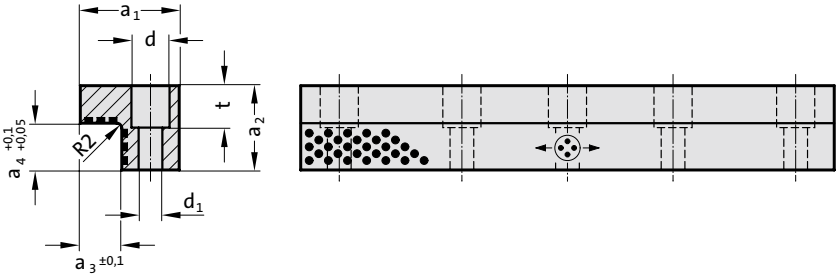

Material:
Bronze with solid lubricant, oilless lubricating

Note:
Screws are not included.

2962.70. Angled guide gib, Bronze with solid lubricant

Order No	a_1	a_2	l	a_3	a_4	e	e_1	e_2	e_3	e_4	d	d_1	t	Number of screw holes
2962.70.026.100	26	20	100	8	10	9	60	-	-	-	15	9	9.6	2
2962.70.026.150	26	20	150	8	10	9	55	55	-	-	15	9	9.6	3
2962.70.026.200	26	20	200	8	10	9	55	50	55	-	15	9	9.6	4
2962.70.032.100	32	30	100	10	15	11	60	-	-	-	-	11	-	2
2962.70.032.150	32	30	150	10	15	11	55	55	-	-	-	11	-	3
2962.70.032.200	32	30	200	10	15	11	55	50	55	-	-	11	-	4
2962.70.032.250	32	30	250	10	15	11	70	70	70	-	-	11	-	4
2962.70.050.200	50	45	200	22	25	14	55	50	55	-	18	11	25	4
2962.70.050.250	50	45	250	22	25	14	70	70	70	-	18	11	25	4
2962.70.050.300	50	45	300	22	25	14	65	65	65	65	18	11	25	5
2962.70.050.350	50	45	350	22	25	14	80	75	75	80	18	11	25	5

Angled guide gib, Bronze with solid lubricant, CNOMO

2962.70.45.

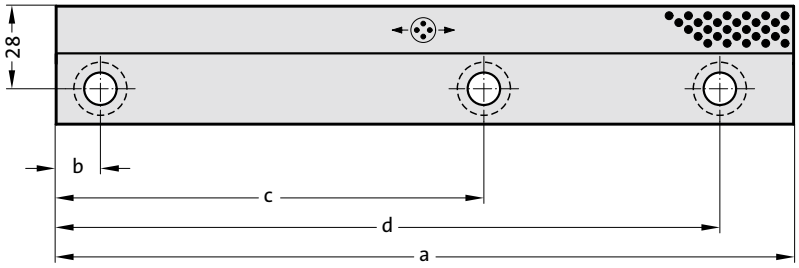



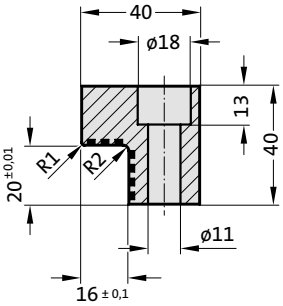

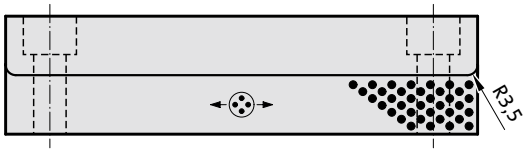

Material:
Bronze with solid lubricant, oilless lubricating

Note:
Screws are not included.

Fixing:
Use socket cap screws DIN EN ISO 4762 M10.

2962.70.45. Angled guide gib, Bronze with solid lubricant, CNOMO

Order No	a	b	c	d	Number of screw holes
2962.70.45.040.160	160	15	145	-	2
2962.70.45.040.250	250	15	145	225	3

Angled guide gib, Bronze with solid lubricant



2962.71.

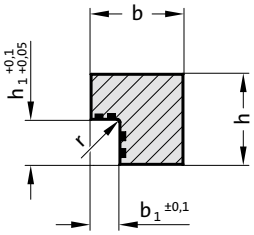

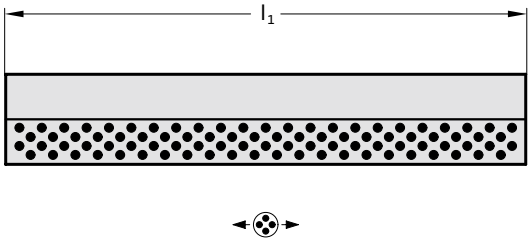

Material:
Bronze with solid lubricant, oilless lubricating

2962.71. Angled guide gib, Bronze with solid lubricant

Order No	b	h	b_1	h_1	l	l	l
					305	605	1005
2962.71.020.012.0305	20	12	5	6	●		
2962.71.025.015.0305	25	15	7	8	●		
2962.71.030.020.0305	30	20	9	12	●		
2962.71.032.030.0605	32	30	10	15		●	●
2962.71.035.035.0605	35	35	12	24		●	●
2962.71.050.045.0605	50	45	22	25		●	●
2962.71.050.050.0605	50	50	16	34		●	●

subject to alterations

Angled guide gib, Bronze with solid lubricant



2962.72.

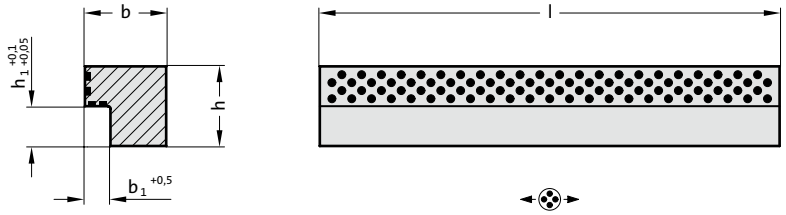

Material:

Bronze with solid lubricant, oilless lubricating

2962.72. Angled guide gib, Bronze with solid lubricant

Order No	b	h	b_1	h_1	l	l	l
					205	320	605
2962.72.015.012.0205	15	12	5	5	●		
2962.72.020.017.0205	20	17	5	7	●	●	
2962.72.020.022.0205	20	22	5	7	●	●	
2962.72.028.027.0205	28	27	8	10	●	●	●
2962.72.028.036.0205	28	36	8	10	●	●	●
2962.72.028.046.0205	28	46	8	10	●	●	●
2962.72.040.066.0205	40	66	12	22	●	●	●
2962.72.040.086.0205	40	86	12	26	●	●	●

Angled guide gib, Bronze with solid lubricant



2962.73.

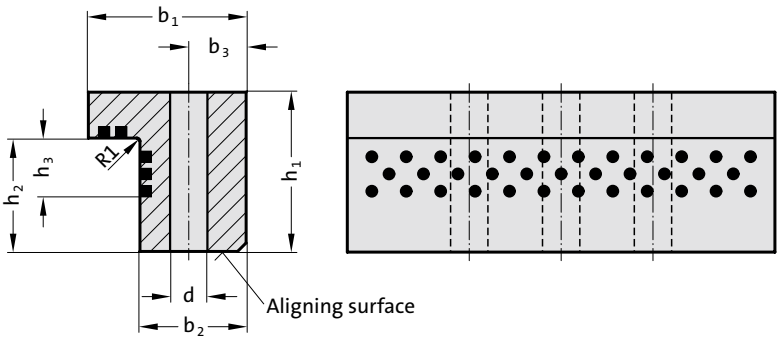

Mounting example

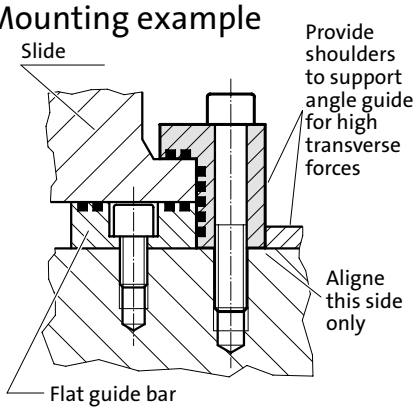

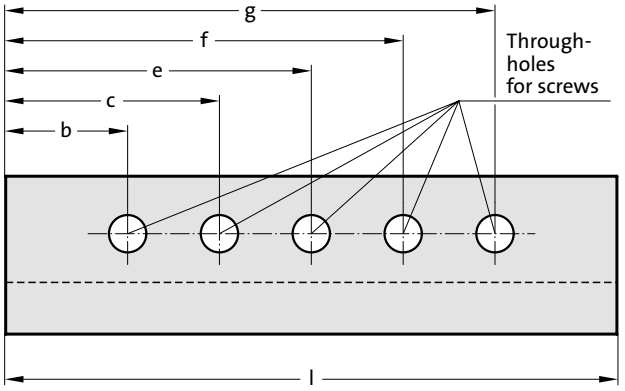

Material:

Bronze with solid lubricant, oilless lubricating

Note:

Screws are not included.

Fixing:

Use socket cap screws DIN EN ISO 4762.

2962.73. Angled guide gib, Bronze with solid lubricant

Order No	b_1	h_1	l	b_2	b_3	h_2	h_3	b	c	e	f	g	d	Number of screw holes
2962.73.025.125	25	15.5	125	18	9	8.5	6	27.5	-	-	-	97.5	9	2
2962.73.025.160	25	15.5	160	18	9	8.5	6	27.5	-	-	-	132.5	9	2
2962.73.032.125	32	30.5	125	22	11	15.5	9	27.5	-	-	-	97.5	11	2
2962.73.032.160	32	30.5	160	22	11	15.5	9	27.5	-	-	-	132.5	11	2
2962.73.032.200	32	30.5	200	22	11	15.5	9	27.5	-	-	-	172.5	11	2
2962.73.045.100	45	50.5	100	30	15	34.5	18	27.5	-	-	-	72.5	13.5	2
2962.73.045.160	45	50.5	160	30	15	34.5	18	27.5	-	-	-	132.5	13.5	2
2962.73.055.100	55	55.5	100	37	20	39.5	23	27.5	-	-	-	72.5	13.5	2
2962.73.055.160	55	55.5	160	37	20	39.5	23	27.5	-	-	-	132.5	13.5	2
2962.73.070.160	70	75.5	160	50	30	55.5	35	35	-	-	-	125	17.5	2
2962.73.070.200	70	75.5	200	50	30	55.5	35	35	-	-	-	165	17.5	2
2962.73.070.250	70	75.5	250	50	30	55.5	35	35	-	125	-	215	17.5	3
2962.73.070.400	70	75.5	400	50	30	55.5	35	35	125	200	275	365	17.5	5
2962.73.085.160	85	90.5	160	63	38	65.5	45	42.5	-	-	-	117.5	22	2
2962.73.085.200	85	90.5	200	63	38	65.5	45	42.5	-	-	-	157.5	22	2
2962.73.085.250	85	90.5	250	63	38	65.5	45	42.5	-	125	-	207.5	22	3
2962.73.085.400	85	90.5	400	63	38	65.5	45	42.5	125	200	275	357.5	22	5

subject to alterations

Angled guide gib, Bronze with solid lubricant

2962.81.

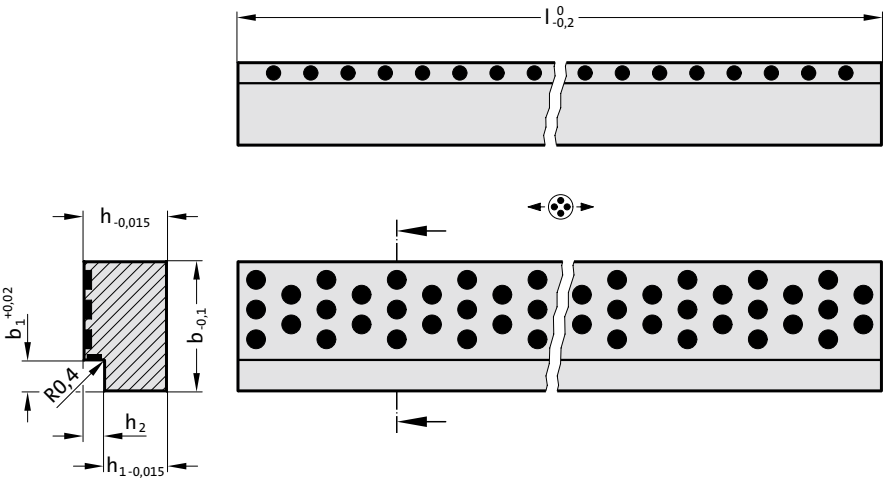



Material:

Bronze with solid lubricant, oilless lubricating

2962.81. Angled guide gib, Bronze with solid lubricant

Order No	h	b	l	h_1	h_2	b_1
2962.81.016.115.040	16	11.5	40	12	4	6
2962.81.016.115.050	16	11.5	50	12	4	6
2962.81.016.115.063	16	11.5	63	12	4	6
2962.81.016.115.080	16	11.5	80	12	4	6
2962.81.016.155.050	16	15.5	50	11	5	8
2962.81.016.155.063	16	15.5	63	11	5	8
2962.81.016.155.080	16	15.5	80	11	5	8
2962.81.016.155.100	16	15.5	100	11	5	8
2962.81.020.195.063	20	19.5	63	15	5	8
2962.81.020.195.080	20	19.5	80	15	5	8
2962.81.020.195.100	20	19.5	100	15	5	8
2962.81.020.195.125	20	19.5	125	15	5	8
2962.81.020.245.080	20	24.5	80	15	5	8
2962.81.020.245.100	20	24.5	100	15	5	8
2962.81.020.245.125	20	24.5	125	15	5	8
2962.81.020.245.160	20	24.5	160	15	5	8
2962.81.025.315.100	25	31.5	100	19	6	10
2962.81.025.315.125	25	31.5	125	19	6	10
2962.81.025.315.160	25	31.5	160	19	6	10
2962.81.025.315.200	25	31.5	200	19	6	10
2962.81.025.395.125	25	39.5	125	19	6	10
2962.81.025.395.160	25	39.5	160	19	6	10
2962.81.025.395.200	25	39.5	200	19	6	10
2962.81.025.395.250	25	39.5	250	19	6	10
2962.81.032.495.160	32	49.5	160	24	8	12
2962.81.032.495.200	32	49.5	200	24	8	12
2962.81.032.495.250	32	49.5	250	24	8	12
2962.81.032.495.315	32	49.5	315	24	8	12

Angled guide gib, Bronze with solid lubricant



2962.82.

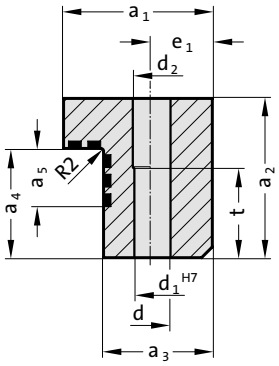

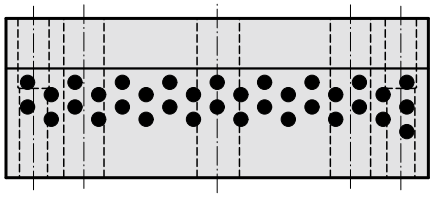

Mounting example

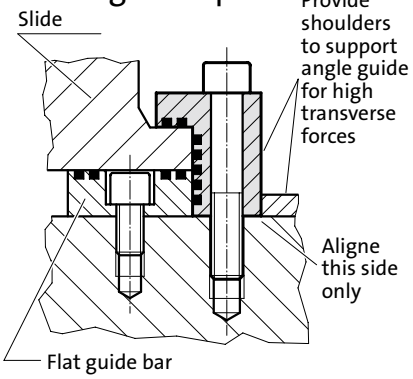

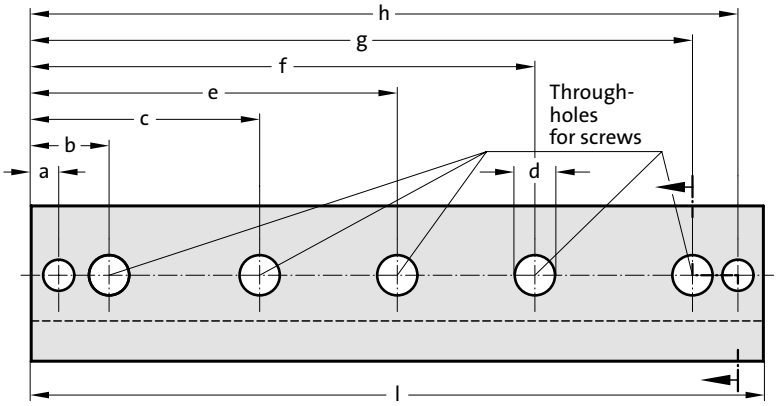

Material:

Bronze with solid lubricant, oilless lubricating

Note:

Screws and pins are not included.

Fixing:

Use socket cap screws DIN EN ISO 4762 and dowel pins DIN 7979.

2962.82. Angled guide gib, Bronze with solid lubricant

Order No	a_1	a_2	l	a_3	a_4	a_5	a	b	c	e	e_1	f	g	h	d	d_1	d_2	t	Number of screw holes
2962.82.055.100	55	55	100	37	39	23	10	27.5	-	-	20	-	72.5	90	13.5	10	11	30	2
2962.82.055.160	55	55	160	37	39	23	10	27.5	-	-	20	-	132.5	150	13.5	10	11	30	2
2962.82.070.160	70	75	160	50	55	35	12.5	35	-	-	30	-	125	147.5	17.5	12	13	30	2
2962.82.070.200	70	75	200	50	55	35	12.5	35	-	-	30	-	165	187.5	17.5	12	13	30	2
2962.82.070.250	70	75	250	50	55	35	12.5	35	-	125	30	-	215	237.5	17.5	12	13	30	3
2962.82.070.400	70	75	400	50	55	35	12.5	35	125	200	30	275	365	387.5	17.5	12	13	30	5
2962.82.085.160	85	90	160	63	65	45	15	42.5	-	-	38	-	117.5	145	22	16	17	30	2
2962.82.085.200	85	90	200	63	65	45	15	42.5	-	-	38	-	157.5	185	22	16	17	30	2
2962.82.085.250	85	90	250	63	65	45	15	42.5	-	125	38	-	207.5	235	22	16	17	30	3
2962.82.085.400	85	90	400	63	65	45	15	42.5	125	200	38	275	357.5	385	22	16	17	30	5

subject to alterations

Angled guide gib, Bronze with solid lubricant

2962.83.



B

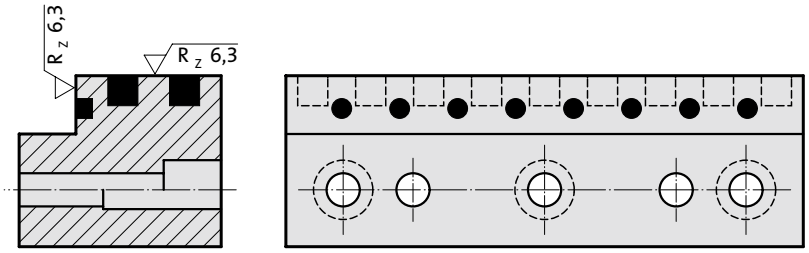

A

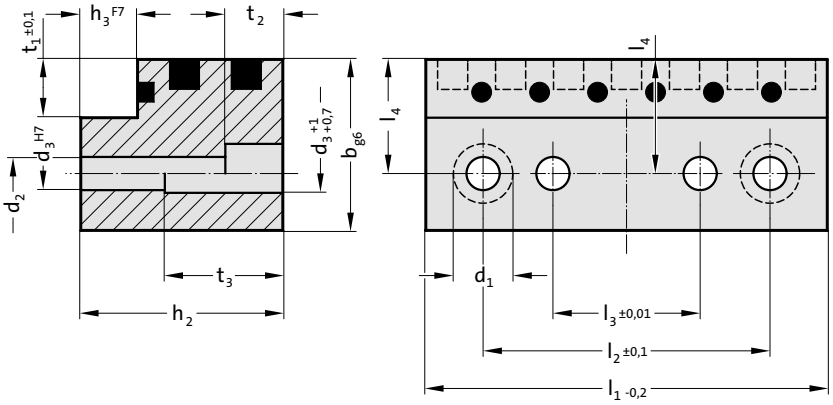

Material:
Bronze with solid lubricant, oilless lubricating

Note:
Screws and pins are not included.

Fixing:
Use socket cap screws DIN EN ISO 4762 and dowel pins DIN 7979.

2962.83. Angled guide gib, Bronze with solid lubricant

Order No	Shape	b	h_1*	h_2	l_1	h_3	t_1	l_2	l_3	l_4	d_1	d_2	d_3	t_2	t_3	Number of screw holes
2962.83.016.012.050	A	16	12	11	50	4	5	34	14	9.5	10	5.5	5	5.7	-	2
2962.83.016.012.071	A	16	12	11	71	4	5	55	35	9.5	10	5.5	5	5.7	-	2
2962.83.016.012.090	B	16	12	11	90	4	5	74	54	9.5	10	5.5	5	5.7	-	3
2962.83.020.020.080	A	20	20	19	80	5	5	64	40	12	11	6.6	6	6.8	9.5	2
2962.83.020.020.100	A	20	20	19	100	5	5	84	60	12	11	6.6	6	6.8	9.5	2
2962.83.020.020.125	B	20	20	19	125	5	5	109	85	12	11	6.6	6	6.8	9.5	3
2962.83.025.032.100	A	25	32	31	100	6	6	80	50	15.5	15	9	8	9	19	2
2962.83.025.032.125	A	25	32	31	125	6	6	105	75	15.5	15	9	8	9	19	2
2962.83.025.032.160	B	25	32	31	160	6	6	140	110	15.5	15	9	8	9	19	3
2962.83.030.050.125	A	30	50	49	125	8	7	95	55	18	18	11	10	11	34	2
2962.83.030.050.160	A	30	50	49	160	8	7	130	90	18	18	11	10	11	34	2
2962.83.030.050.200	B	30	50	49	200	8	7	170	130	18	18	11	10	11	34	3

*h_1 = Nominal ordering height

T-Guide bar, Bronze with solid lubricant



2964.77.

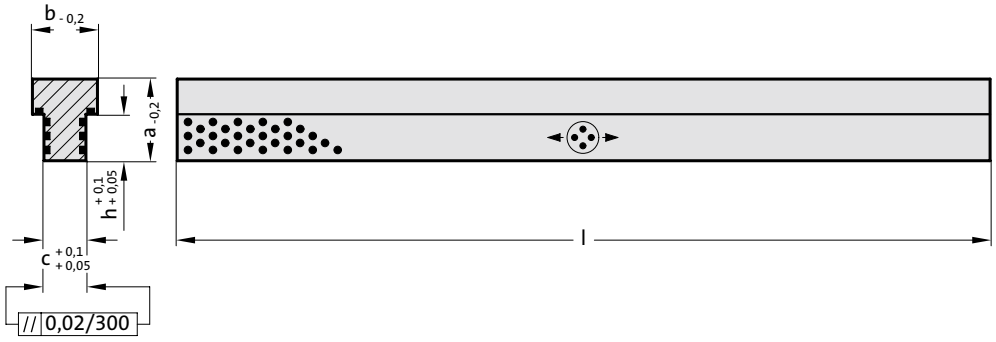

Material:
Bronze with solid lubricant, oilless lubricating

2964.77. T-Guide bar, Bronze with solid lubricant

Order No	a	b	c	h	l
2964.77.012.018.0350	12	18	8	5	350
2964.77.025.022.0350	25	22	12	15	350
2964.77.035.028.0350	35	28	18	20	350





2964.78.

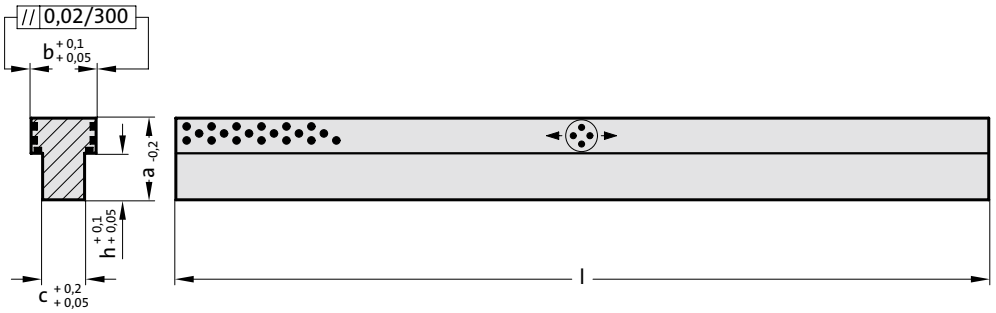

Material:
Bronze with solid lubricant, oilless lubricating

2964.78. T-Guide bar, Bronze with solid lubricant

Order No	a	b	c	h	l
2964.78.012.018.0350	12	18	8	5	350
2964.78.025.022.0350	25	22	12	15	350
2964.78.035.028.0350	35	28	18	20	350



Sliding block, Bronze with solid lubricant, NAAMS
Prismatic guide, Steel, NAAMS

2963.82.

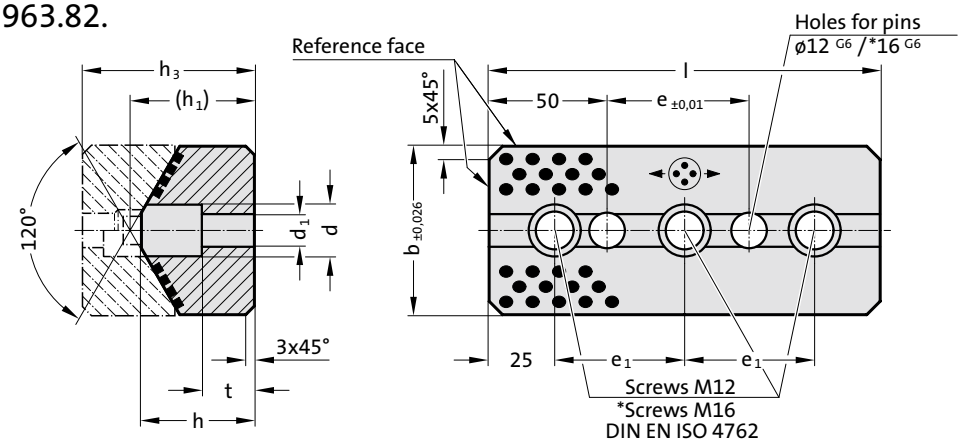



2963.82. Sliding block, Bronze with solid lubricant, NAAMS

Order No	b	h	(h1)	h3	l	e1	e	d	d1	t	Number of screw holes
2963.82.065.039.0150	65	39	(42)	65	150	100	50	20	13.5	13	2
2963.82.065.039.0200	65	39	(42)	65	200	150	100	20	13.5	13	2
2963.82.065.039.0250	65	39	(42)	65	250	100	150	20	13.5	13	3
2963.82.065.039.0300	65	39	(42)	65	300	125	200	20	13.5	13	3
2963.82.075.039.0150	75	39	(42)	65	150	100	50	20	13.5	13	2
2963.82.075.039.0200	75	39	(42)	65	200	150	100	20	13.5	13	2
2963.82.075.039.0250	75	39	(42)	65	250	100	150	20	13.5	13	3
2963.82.075.039.0300	75	39	(42)	65	300	125	200	20	13.5	13	3
2963.82.125.052.0150	125	52	(57)	85	150	100	50	26	17.5	15	2
2963.82.125.052.0200	125	52	(57)	85	200	150	100	26	17.5	15	2
2963.82.125.052.0250	125	52	(57)	85	250	100	150	26	17.5	15	3
2963.82.125.052.0300	125	52	(57)	85	300	125	200	26	17.5	15	3

Material:
Bronze with solid lubricant, oilless lubricating

Note:
Screws and pins are not included.

* at 2963.82.125.

2963.83.

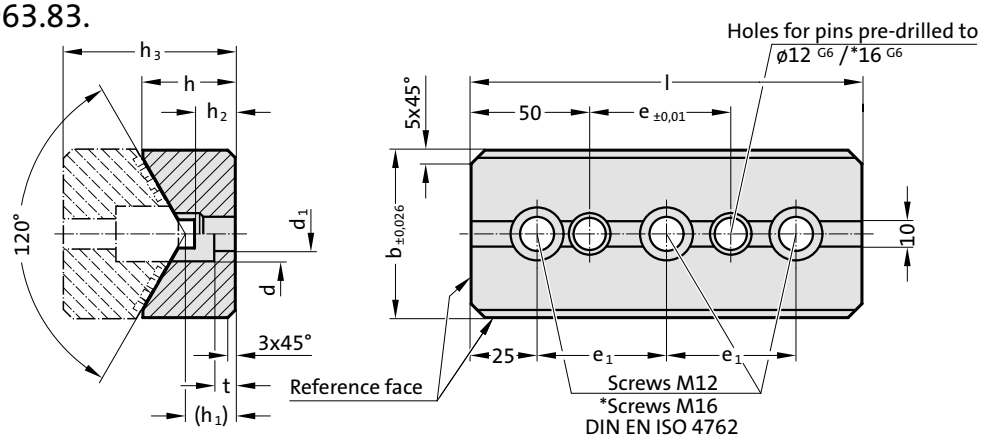



2963.83. Prismatic guide, Steel, NAAMS

Order No	b	h	(h1)	h2	h3	l	e	e1	d	d1	t	Number of screw holes
2963.83.065.040.0150	65	40	(23)	21	65	150	50	100	20	13.5	10	2
2963.83.065.040.0200	65	40	(23)	21	65	200	100	150	20	13.5	10	2
2963.83.065.040.0250	65	40	(23)	21	65	250	150	100	20	13.5	10	3
2963.83.065.040.0300	65	40	(23)	21	65	300	200	125	20	13.5	10	3
2963.83.075.040.0150	75	40	(23)	21	65	150	50	100	20	13.5	10	2
2963.83.075.040.0200	75	40	(23)	21	65	200	100	150	20	13.5	10	2
2963.83.075.040.0250	75	40	(23)	21	65	250	150	100	20	13.5	10	3
2963.83.075.040.0300	75	40	(23)	21	65	300	200	125	20	13.5	10	3
2963.83.125.060.0150	125	60	(28)	27	85	150	50	100	26	17.5	15	2
2963.83.125.060.0200	125	60	(28)	27	85	200	100	150	26	17.5	15	2
2963.83.125.060.0250	125	60	(28)	27	85	250	150	100	26	17.5	15	3
2963.83.125.060.0300	125	60	(28)	27	85	300	200	125	26	17.5	15	3

Material:
Steel, sliding faces surface hardened

Note:
Screws and pins are not included.

* at 2963.83.125.

Sliding block, Bronze with solid lubricant, VDI 3357
Prismatic guide, Steel, VDI 3357



2963.84.

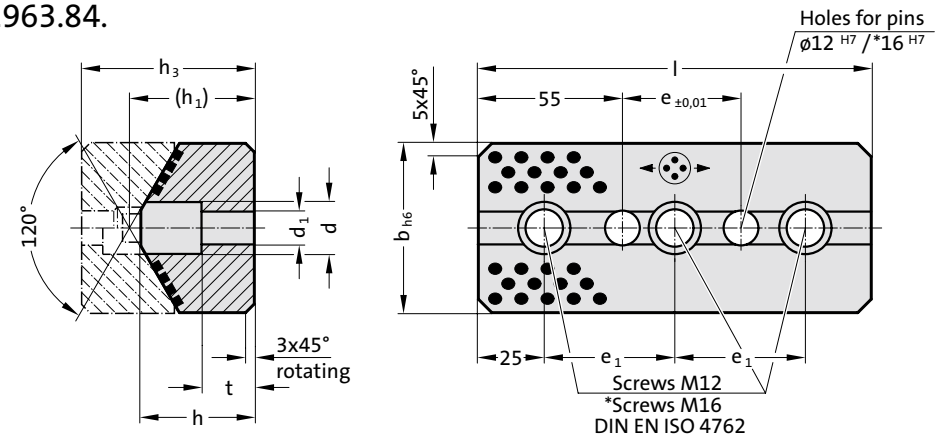

Material:
Bronze with solid lubricant, oilless lubricating

Note:
Screws and pins are not included.

* at 2963.84.125.

2963.84. Sliding block, Bronze with solid lubricant, VDI 3357

Order No	b	h	(h_1)	h_3	l	e	e_1	d	d_1	t	Number of screw holes
2963.84.065.044.0150	65	44	(47)	65	150	45	100	20	13.5	20	2
2963.84.065.044.0200	65	44	(47)	65	200	95	150	20	13.5	20	2
2963.84.065.044.0250	65	44	(47)	65	250	145	100	20	13.5	20	3
2963.84.065.044.0300	65	44	(47)	65	300	195	125	20	13.5	20	3
2963.84.125.047.0150	125	47	(52)	85	150	45	100	26	17.5	15	2
2963.84.125.047.0200	125	47	(52)	85	200	95	150	26	17.5	15	2
2963.84.125.047.0250	125	47	(52)	85	250	145	100	26	17.5	15	3
2963.84.125.047.0300	125	47	(52)	85	300	195	125	26	17.5	15	3
2963.84.125.052.0150	125	52	(57)	85	150	45	100	26	17.5	15	2
2963.84.125.052.0200	125	52	(57)	85	200	95	150	26	17.5	15	2
2963.84.125.052.0250	125	52	(57)	85	250	145	100	26	17.5	15	3
2963.84.125.052.0300	125	52	(57)	85	300	195	125	26	17.5	15	3



2963.85.

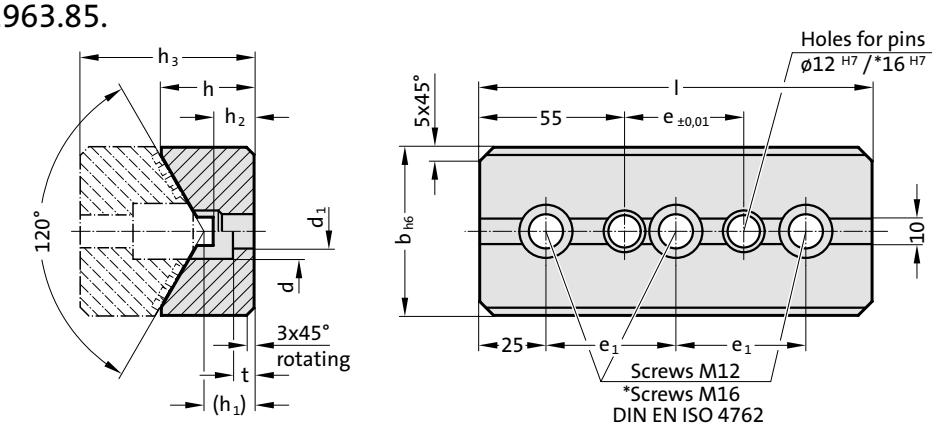

Material:
Steel, sliding faces surface hardened

Note:
Screws and pins are not included.

* at 2963.85.125.

2963.85. Prismatic guide, Steel, VDI 3357

Order No	b	h	(h_1)	h_2	h_3	l	e	e_1	d	d_1	t	Number of screw holes
2963.85.065.035.0150	65	35	(18)	17	65	150	45	100	20	13.5	8	2
2963.85.065.035.0200	65	35	(18)	17	65	200	95	150	20	13.5	8	2
2963.85.065.035.0250	65	35	(18)	17	65	250	145	100	20	13.5	8	3
2963.85.065.035.0300	65	35	(18)	17	65	300	195	125	20	13.5	8	3
2963.85.125.060.0150	125	60	(33)	32	85	150	45	100	26	17.5	15	2
2963.85.125.060.0200	125	60	(33)	32	85	200	95	150	26	17.5	15	2
2963.85.125.060.0250	125	60	(33)	32	85	250	145	100	26	17.5	15	3
2963.85.125.060.0300	125	60	(33)	32	85	300	195	125	26	17.5	15	3
2963.85.125.060.0150.1	125	60	(28)	27	85	150	45	100	26	17.5	15	2
2963.85.125.060.0200.1	125	60	(28)	27	85	200	95	150	26	17.5	15	2
2963.85.125.060.0250.1	125	60	(28)	27	85	250	145	100	26	17.5	15	3
2963.85.125.060.0300.1	125	60	(28)	27	85	300	195	125	26	17.5	15	3

Prismatic guide, Bronze with solid lubricant
Sliding block, Steel

2963.70.

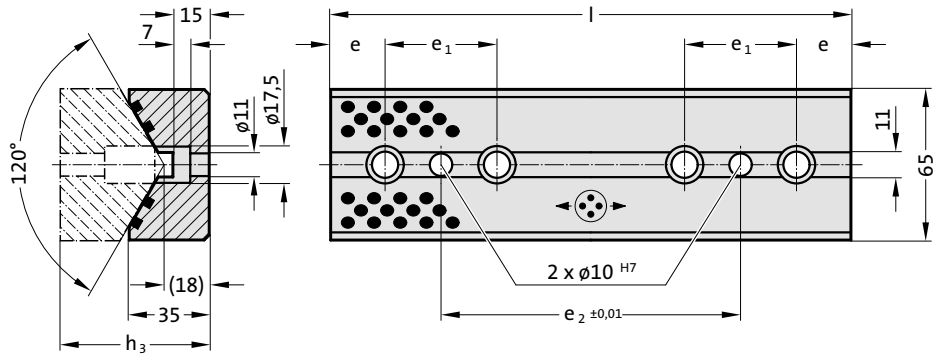



2963.70. Prismatic guide, Bronze with solid lubricant

Order No	e	e1	e2	h3	l	Number of screw holes
2963.70.065.035.0100	20	60	20	65	100	2
2963.70.065.035.0150	25	50	50	65	150	3
2963.70.065.035.0200	25	50	100	65	200	4
2963.70.065.035.0250	25	50	150	65	250	5
2963.70.065.035.0300	25	50	200	65	300	6

Material:
Bronze with solid lubricant, oilless lubricating

Note:
Screws and pins not included.

Fixing:
Use socket cap screws DIN EN ISO 4762 M10.

2963.71.

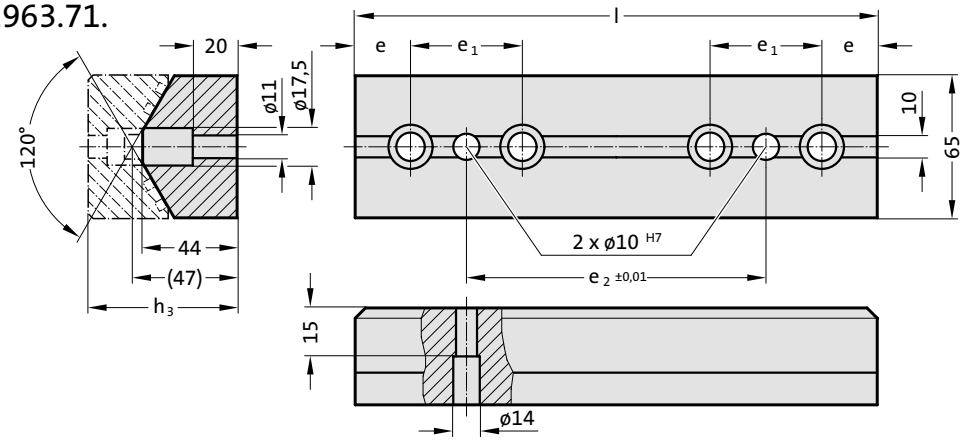



2963.71. Sliding block, Steel

Order No	e	e1	e2	h3	l	Number of screw holes
2963.71.065.044.0100	20	60	20	65	100	2
2963.71.065.044.0150	25	50	50	65	150	3
2963.71.065.044.0200	25	50	100	65	200	4
2963.71.065.044.0250	25	50	150	65	250	5
2963.71.065.044.0300	25	50	200	65	300	6

Material:
Steel, sliding faces surface hardened

Note:
Screws and pins are not included.

Fixing:
Use socket cap screws DIN EN ISO 4762 M10.

FIBRO

Prismatic guide, Bronze with solid lubricant
Sliding block, Steel



2963.72.

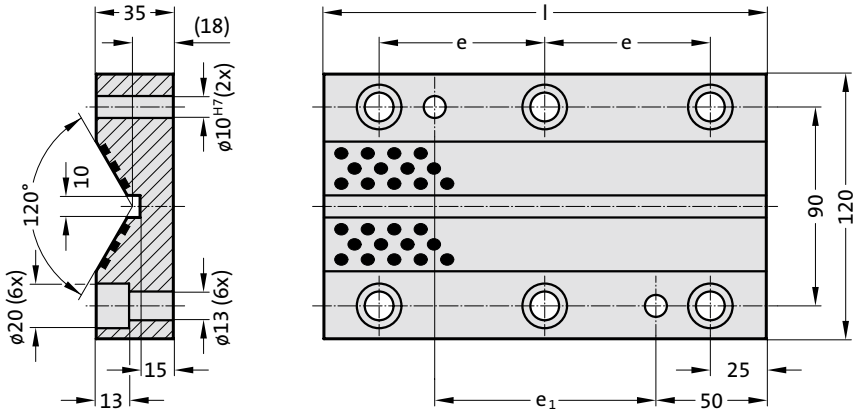

Material:
Bronze with solid lubricant, oilless lubricating

Note:
Screws and pins are not included.

Fixing:
Use socket cap screws DIN EN ISO 4762 M12.

2963.72. Prismatic guide, Bronze with solid lubricant

Order No	l	e	e_1	Number of screw holes
2963.72.120.035.0150	150	50	50	6
2963.72.120.035.0200	200	75	100	6
2963.72.120.035.0250	250	100	150	6
2963.72.120.035.0300	300	125	200	6



2963.73.

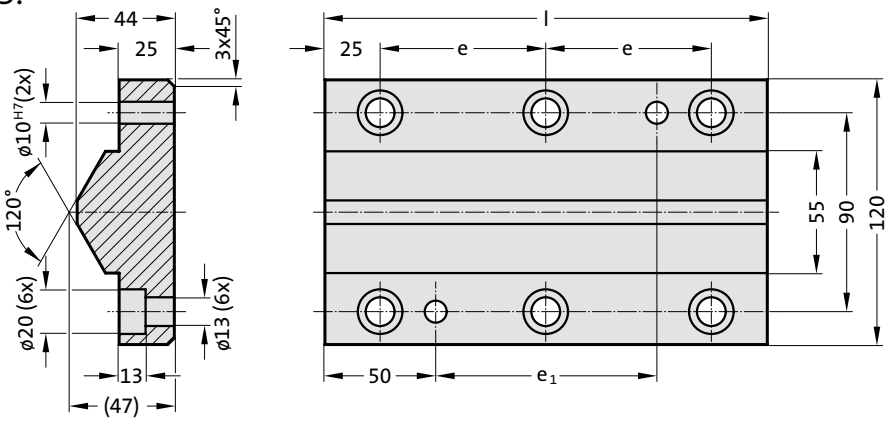

Material:
Steel, sliding faces surface hardened

Note:
Screws and pins are not included.

Fixing:
Use socket cap screws DIN EN ISO 4762 M12.

2963.73. Sliding block, Steel

Order No	l	e	e_1	Number of screw holes
2963.73.120.044.0150	150	50	50	6
2963.73.120.044.0200	200	75	100	6
2963.73.120.044.0250	250	100	150	6
2963.73.120.044.0300	300	125	200	6

subject to alterations

Prismatic guide, Steel



2963.81.

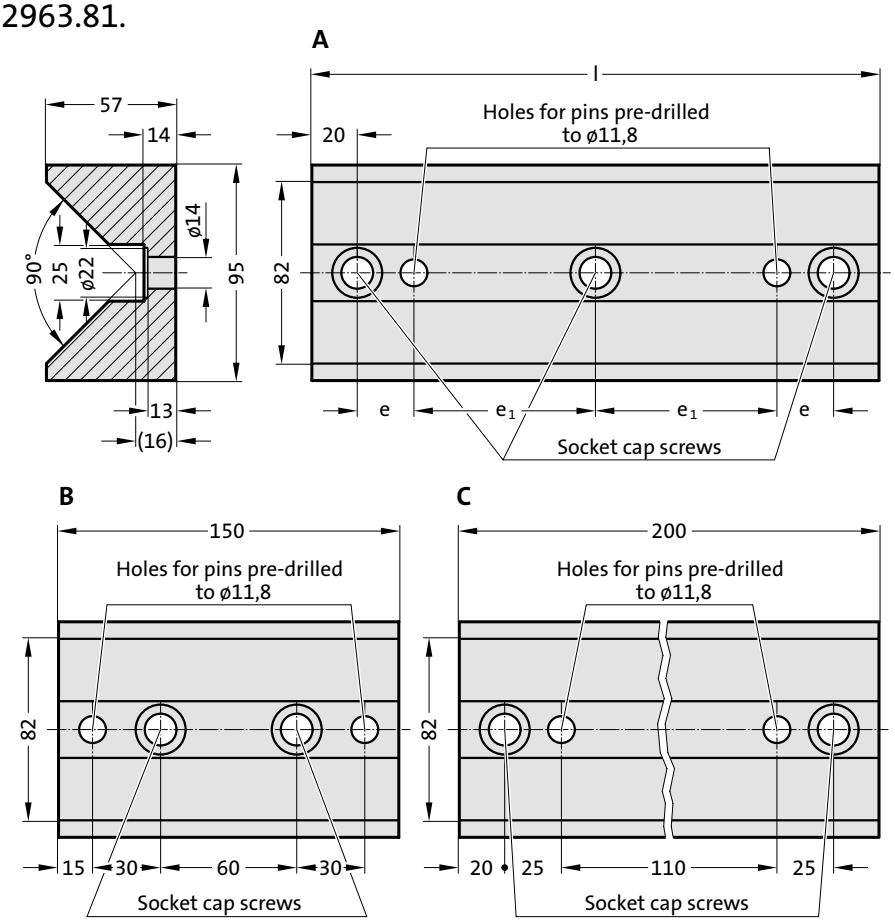

Material:
Steel, sliding faces surface hardened

Note:
Screws and pins are not included.

Fixing:
Use socket cap screws DIN EN ISO 4762 M12.

2963.81. Prismatic guide, Steel

Order No	Shape	l	e	e_1	Number of screw holes
2963.81.095.057.0150	B	150	30	-	2
2963.81.095.057.0200	C	200	25	-	2
2963.81.095.057.0250	A	250	25	80	3
2963.81.095.057.0300	A	300	30	100	3

Sliding block, Bronze with solid lubricant

2963.80.

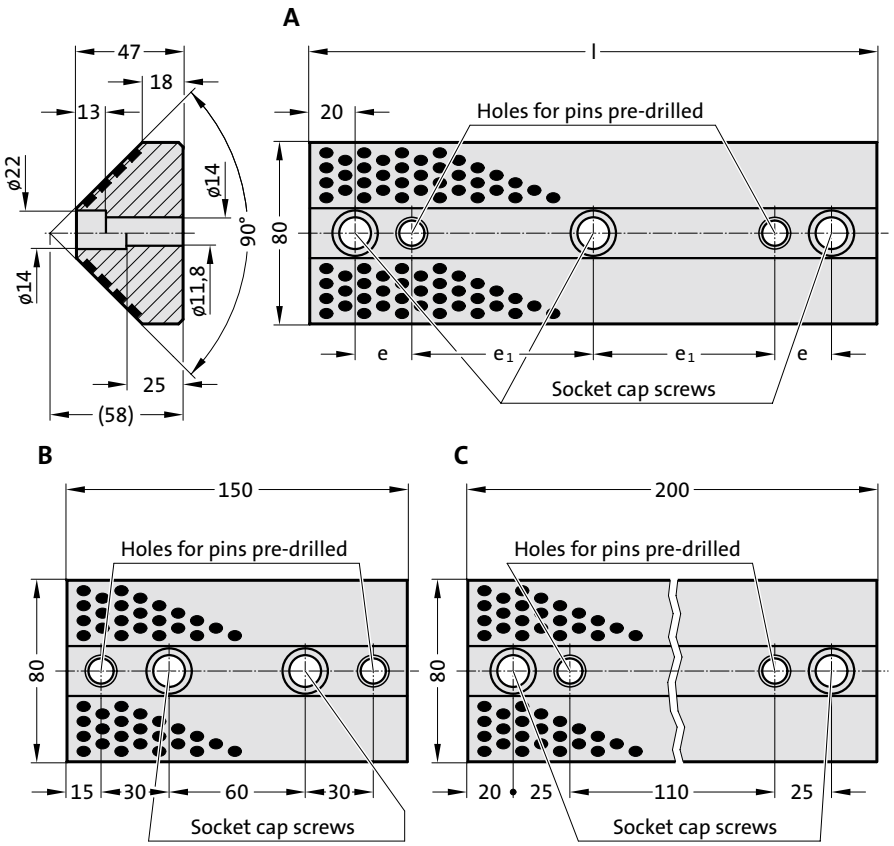



Material:
Bronze with solid lubricant, oilless lubricating

Note:
Screws and pins are not included.

Fixing:
Use socket cap screws DIN EN ISO 4762 M12.

2963.80. Sliding block, Bronze with solid lubricant

Order No	Shape	l	e	e_1	Number of screw holes
2963.80.080.047.0150	B	150	30	-	2
2963.80.080.047.0200	C	200	25	-	2
2963.80.080.047.0250	A	250	25	80	3
2963.80.080.047.0300	A	300	30	100	3

Single-sided prismatic guide, Bronze with solid lubricant



2965.81.

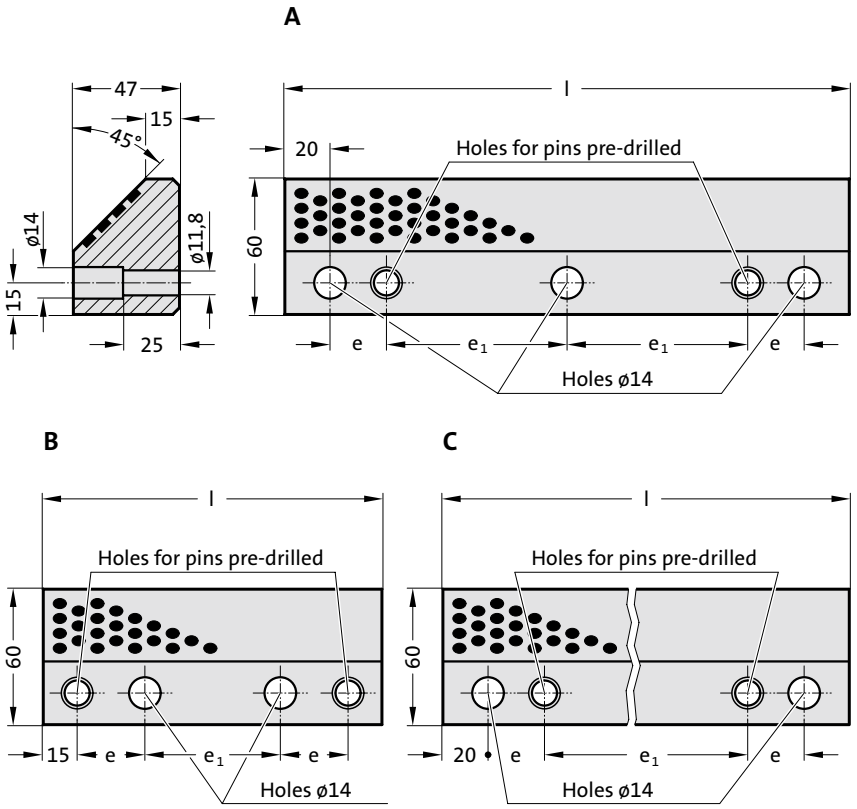

Material:

Bronze with solid lubricant, oilless lubricating

Note:

Matching single-sided prismatic sliding blocks 2965.83.
Screws and pins are not included.

Fixing:

Use socket cap screws DIN EN ISO 4762 M12.

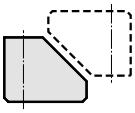

2965.81. Single-sided prismatic guide, Bronze with solid lubricant

Order No	Shape	l	e	e_1	Number of screw holes
2965.81.060.047.0150	B	150	30	60	2
2965.81.060.047.0200	C	200	25	110	3
2965.81.060.047.0250	A	250	25	80	3
2965.81.060.047.0300	A	300	30	100	3

subject to alterations

Single-sided prismatic sliding block, Steel

2965.83.

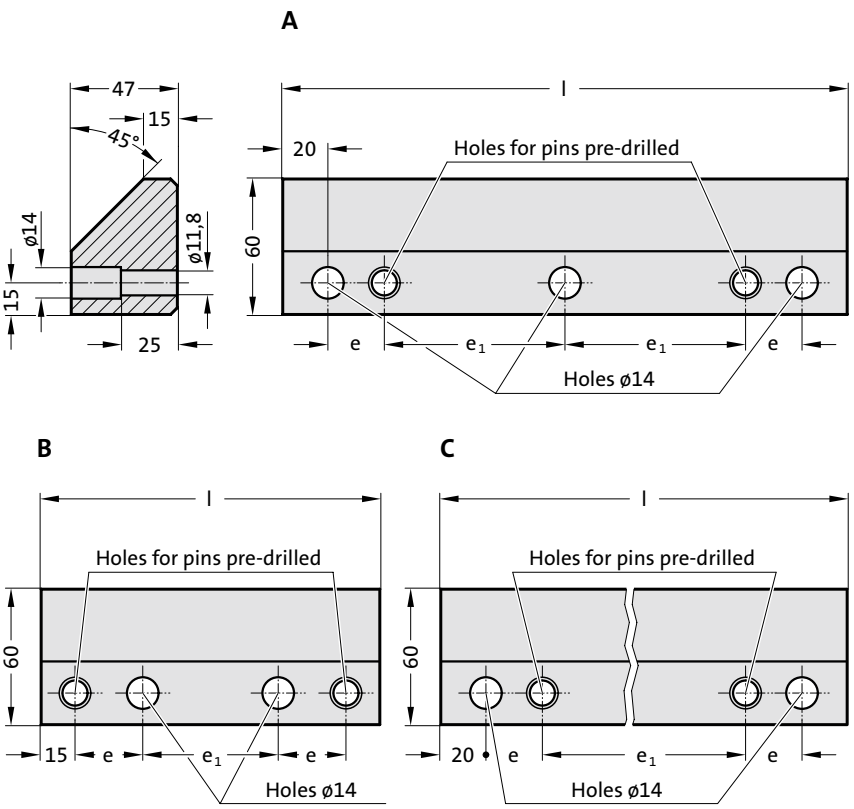



Material:
Steel, sliding faces surface hardened

Note:
Matching single-sided prismatic guides 2965.81.
Screws and pins are not included.

Fixing:
Use socket cap screws DIN EN ISO 4762 M12.

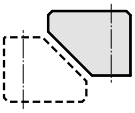

2965.83. Single-sided prismatic sliding block, Steel

Order No	Shape	l	e	e_1	Number of screw holes
2965.83.060.047.0150	B	150	30	60	2
2965.83.060.047.0200	C	200	25	110	3
2965.83.060.047.0250	A	250	25	80	3
2965.83.060.047.0300	A	300	30	100	3

Single-sided prismatic guide, Bronze with solid lubricant, CNOMO



2965.80.45.

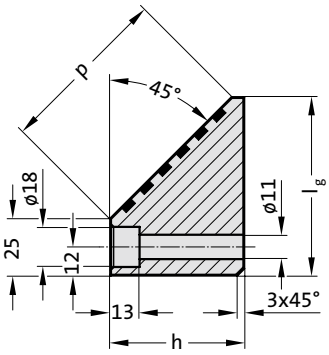

A

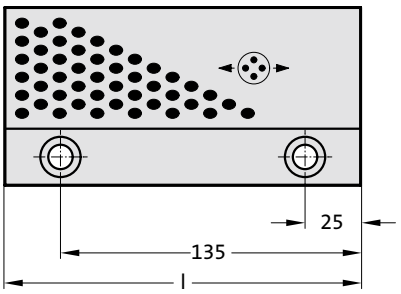

Material:
Bronze with solid lubricant, oilless lubricating

Note:
Matching single-sided prismatic sliding blocks 2965.82.45.
Screws and pins are not included.

Fixing:
Use socket cap screws DIN EN ISO 4762 M10.

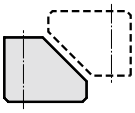

B

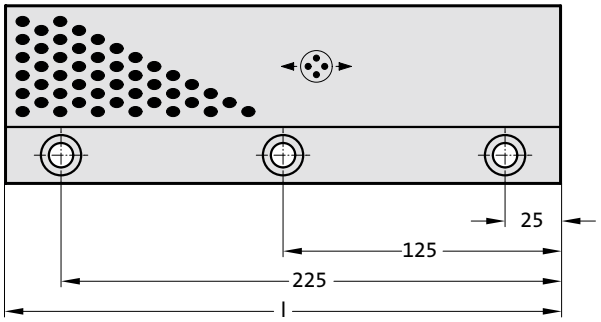

2965.80.45. Single-sided prismatic guide, Bronze with solid lubricant, CNOMO

Order No	Shape	l_g	h	l	p	Number of screw holes
2965.80.45.060.045.160	A	60	45	160	50	2
2965.80.45.060.045.250	B	60	45	250	50	3
2965.80.45.080.060.160	A	80	60	160	80	2
2965.80.45.080.060.250	B	80	60	250	80	3

subject to alterations

Single-sided prismatic sliding block, Steel, CNOMO

2965.82.45.

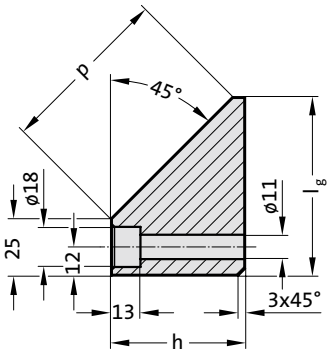

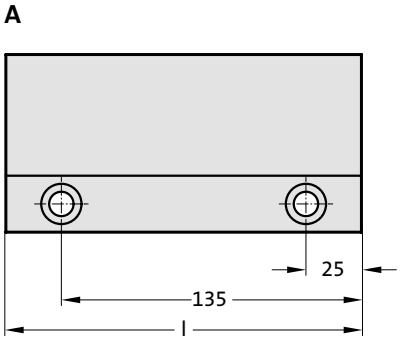

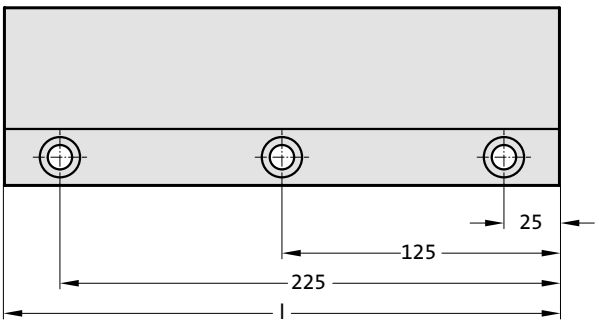



Material:
Steel, sliding faces surface hardened

Note:
Matching single-sided prismatic guides 2965.80.45.
Screws and pins are not included.

Fixing:
Use socket cap screws DIN EN ISO 4762 M10.

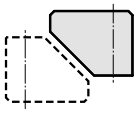

2965.82.45. Single-sided prismatic sliding block, Steel, CNOMO

Order No	Shape	l_g	h	l	p	Number of screw holes
2965.82.45.060.045.160	A	60	45	160	50	2
2965.82.45.060.045.250	B	60	45	250	50	3
2965.82.45.080.060.160	A	80	60	160	80	2
2965.82.45.080.060.250	B	80	60	250	80	3

Single-sided prismatic guide, Bronze with solid lubricant



2965.80.

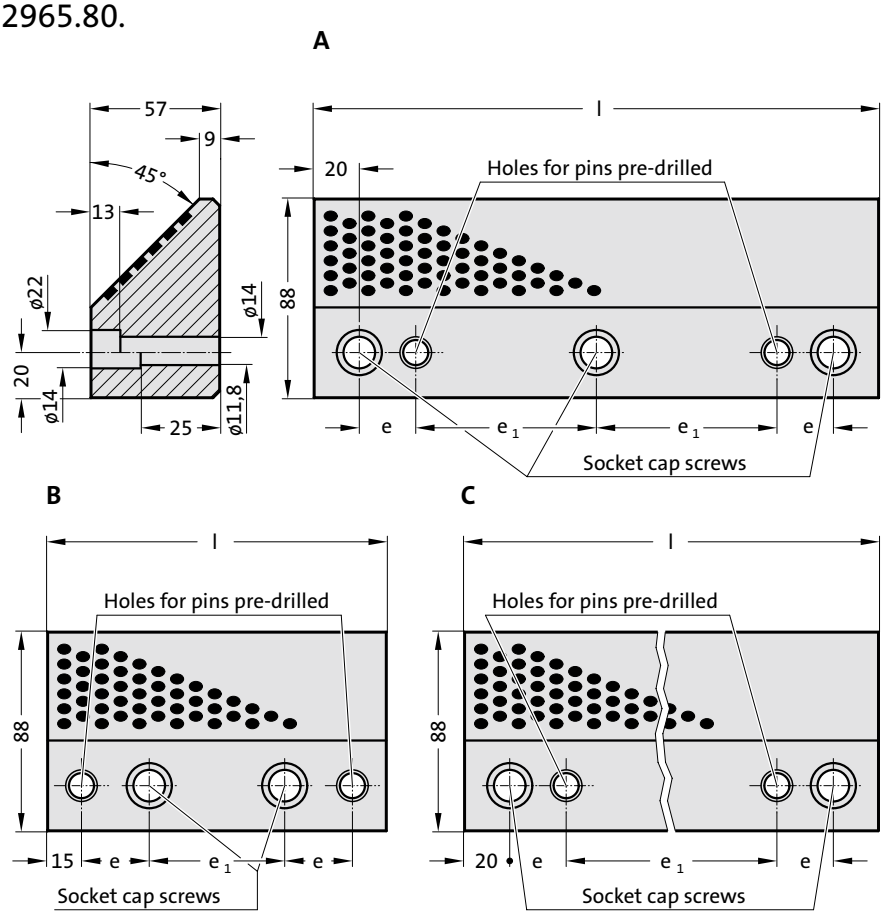

Material:

Bronze with solid lubricant, oilless lubricating

Note:

Matching single-sided prismatic sliding blocks 2965.82.
Screws and pins are not included.

Fixing:

Use socket cap screws DIN EN ISO 4762 M12.

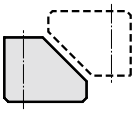

2965.80. Single-sided prismatic guide, Bronze with solid lubricant

Order No	Shape	l	e	e_1	Number of screw holes
2965.80.088.057.0150	B	150	30	60	2
2965.80.088.057.0200	C	200	25	110	3
2965.80.088.057.0250	A	250	25	80	3
2965.80.088.057.0300	A	300	30	100	3

subject to alterations

Single-sided prismatic sliding block, Steel

2965.82.

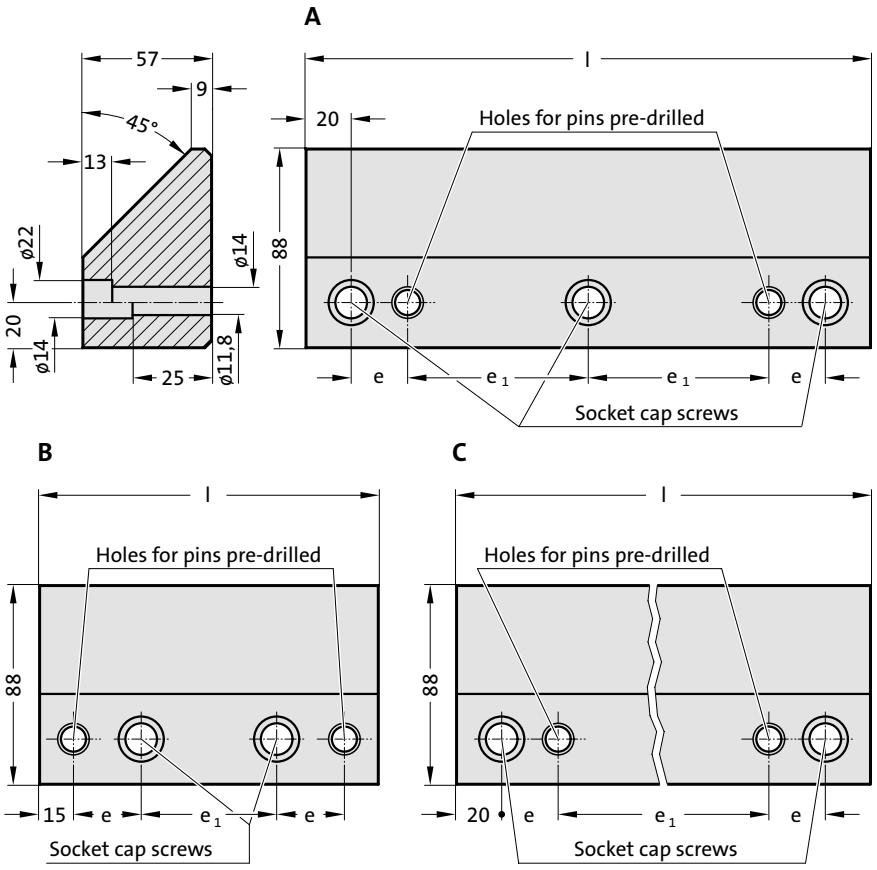



Material:
Steel, sliding faces surface hardened

Note:
Matching single-sided prismatic guides 2965.80.
Screws and pins are not included.

Fixing:
Use socket cap screws DIN EN ISO 4762 M12.

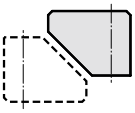

2965.82. Single-sided prismatic sliding block, Steel

Order No	Shape	l	e	e_1	Number of screw holes
2965.82.088.057.0150	B	150	30	60	2
2965.82.088.057.0200	C	200	25	110	3
2965.82.088.057.0250	A	250	25	80	3
2965.82.088.057.0300	A	300	30	100	3

Slide stop

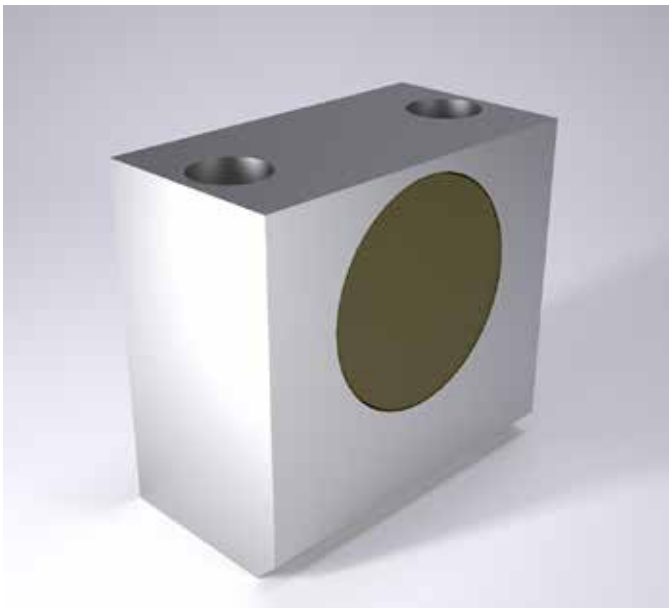

2451.6.

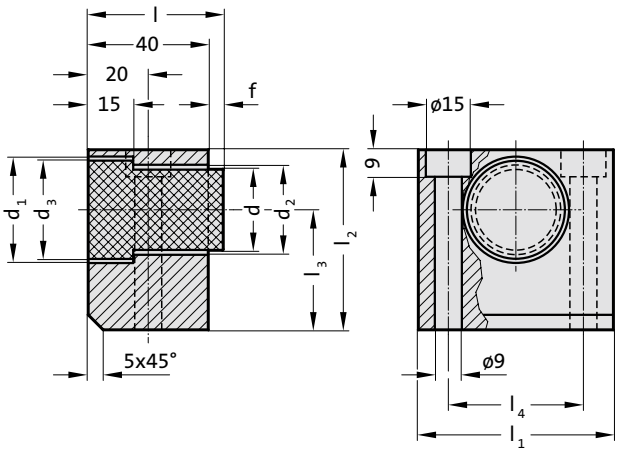

Mounting example

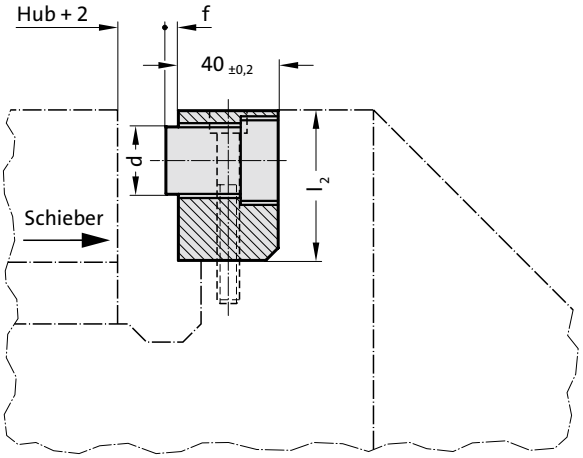

Material:

Locating block: Steel
Stop buffer: FIBROFLEX®, 90 Shore A

Note:

Screws are not included.
Order No for spare part stop buffer: 2451.6. □□□ .2.

Fixing:

Use socket cap screws DIN EN ISO 4762 M8.

2451.6. Slide stop

Order No	d	d_1	d_2	d_3	l	l_1	l_2	l_3	l_4	f	Spring force [N]
2451.6.027	27	35	30	34	45	65	60	40	45	5	5200
2451.6.036	36	45	40	44	45	75	70	45	55	5	9800

subject to alterations

Stop buffer

2451.6.□□□.2

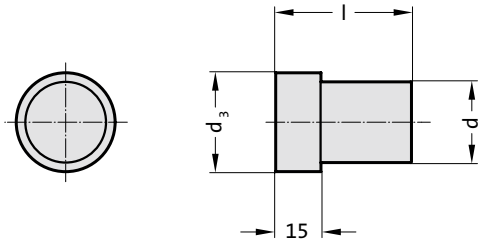



2451.6. .2 Stop buffer

Order No	d	d_3	l
2451.6.027.2	27	34	45
2451.6.036.2	36	44	45

Material:

FIBROFLEX®, 90 Shore A

Mounting Examples
Oilless Guide Elements

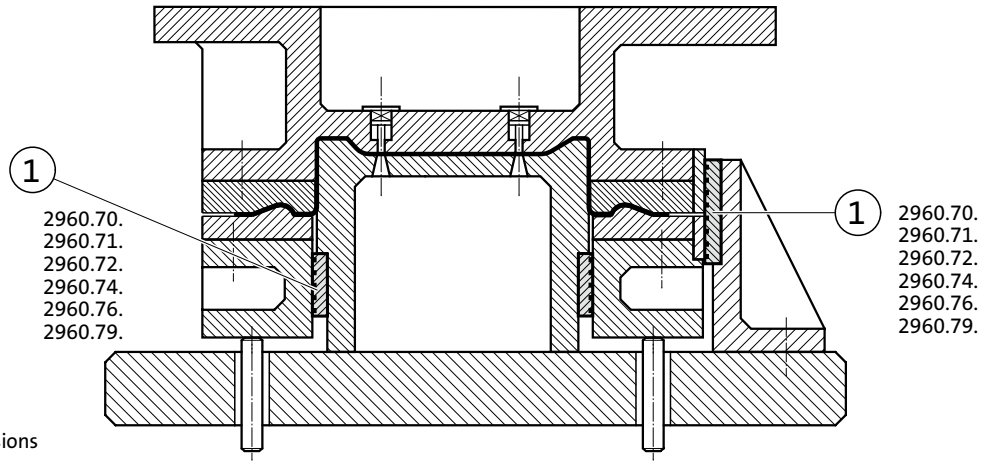

Pos. 1
2960.70. Sliding Pads ISO
2960.71. Sliding Pads VDI
2960.72. Sliding Pads, small dimensions
2960.74. Sliding Pads AFNOR
2960.76. Sliding Pads
2960.79. Sliding Pads to NAAMS

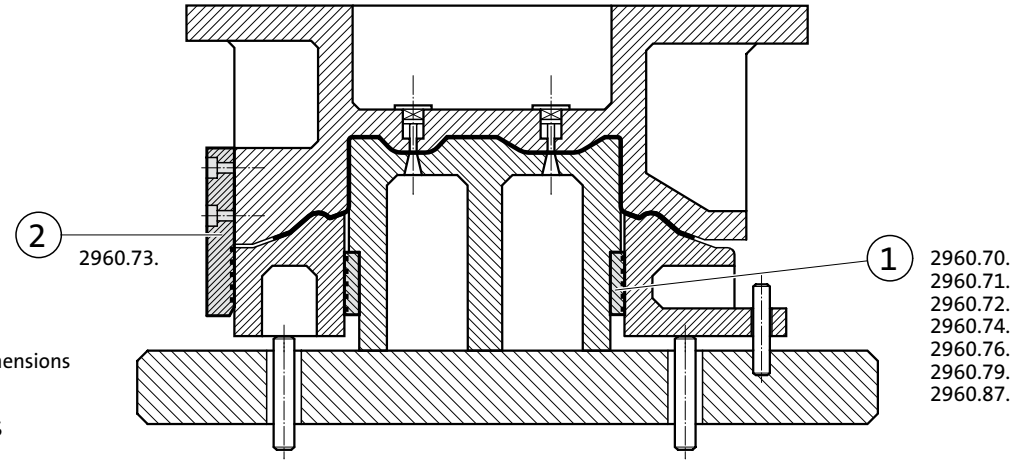

Pos. 1
2960.70. Sliding Pads ISO
2960.71. Sliding Pads VDI
2960.72. Sliding Pads, small dimensions
2960.74. Sliding Pads AFNOR
2960.76. Sliding Pads
2960.79. Sliding Pads to NAAMS
2960.87. Sliding Pads VDI

Pos. 2
2960.73. Guide Brackets VDI

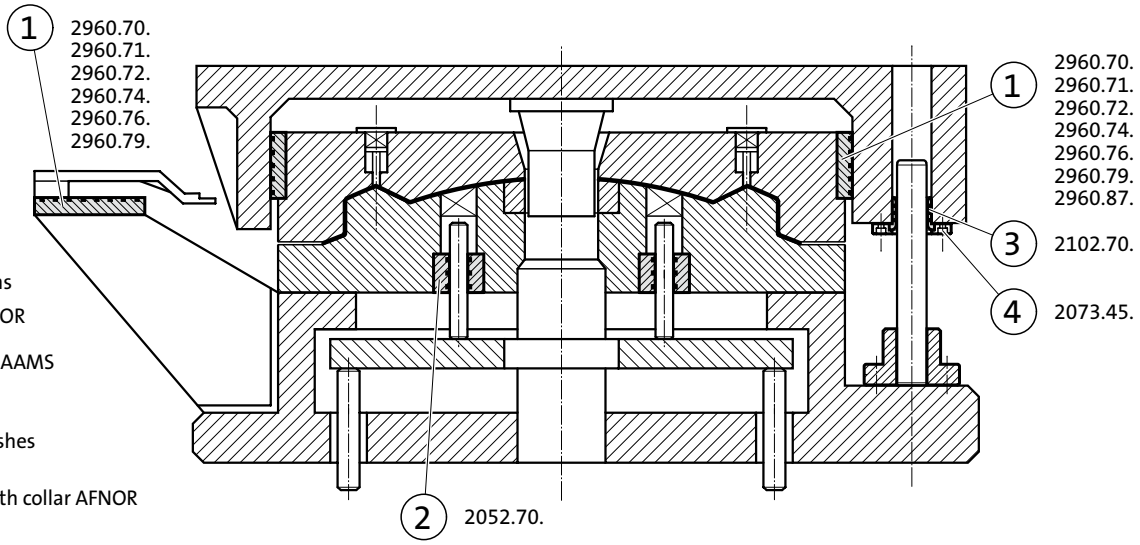

Pos. 1
2960.70. Sliding Pads ISO
2960.71. Sliding Pads VDI
2960.72. Sliding Pads,
small dimensions
2960.74. Sliding Pads AFNOR
2960.76. Sliding Pads
2960.79. Sliding Pads to NAAMS
2960.87. Sliding Pads VDI

Pos. 2
2052.70. Oilless Guide Bushes

Pos. 3
2102.70. Guide Bushes with collar AFNOR

Pos. 4
2073.45. Securing Flange

Mounting Examples
Oilless Guide Elements

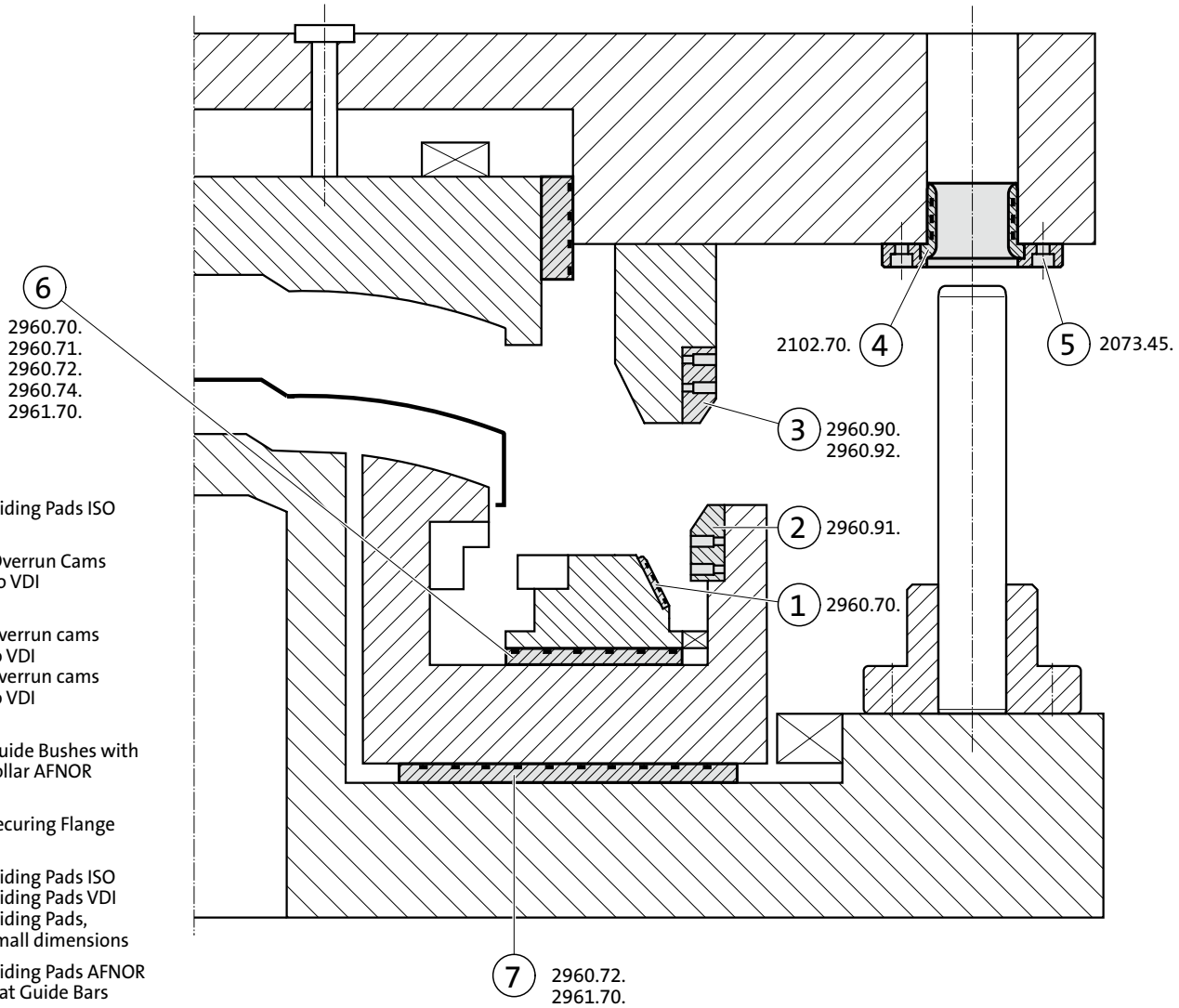

Pos. 1
2960.70. Sliding Pads ISO

Pos. 2
2960.91. Overrun Cams to VDI

Pos. 3
2960.90. Overrun cams to VDI
2960.92. Overrun cams to VDI

Pos. 4
2102.70. Guide Bushes with collar AFNOR

Pos. 5
2073.45. Securing Flange

Pos. 6
2960.70. Sliding Pads ISO
2960.71. Sliding Pads VDI
2960.72. Sliding Pads, small dimensions
2960.74. Sliding Pads AFNOR
2961.70. Flat Guide Bars

Pos. 7
2960.72. Sliding Pads, small dimensions
2961.70. Flat Guide Bars

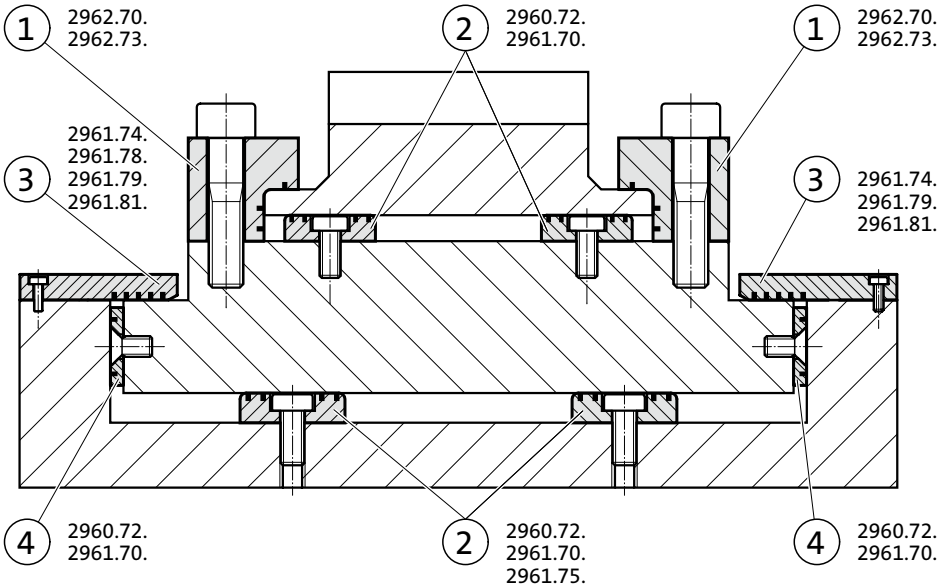

Pos. 1
2962.70. Angled Guide Gibs
2962.73. Angled Guide Gibs

Pos. 2
2960.72. Sliding Pads, small dimension
2961.70. Flat Guide Bars
2961.75.

Pos. 3
2961.74. Retaining Plates
2961.79. to VDI
2961.81.

Pos. 4
2960.72. Sliding Pads, small dimension
2961.70. Flat Guide Bars

Mounting Examples
Oilless Guide Elements

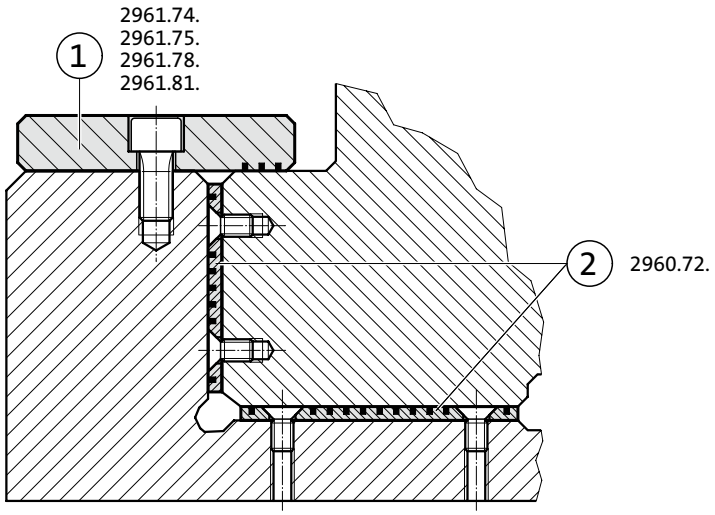

Pos. 1
2961.74. Retaining Plates to VDI

Pos. 2
2960.72. Sliding Pads, small dimensions

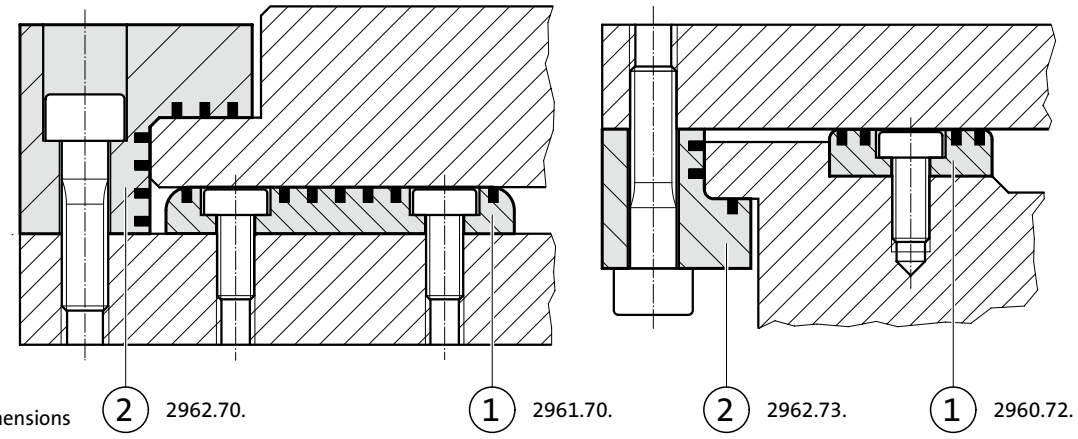

Pos. 1
2961.70. Flat Guide Bars
2960.72. Sliding Pads, small dimensions

Pos. 2
2962.70. Angled Guide Gibs
2962.73. Angled Guide Gibs

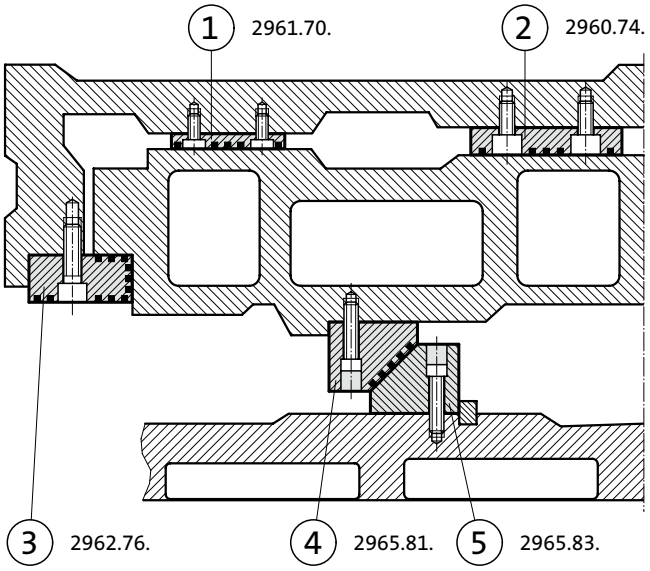

Pos. 1
2961.70. Guide Bars

Pos. 2
2960.74. Sliding Pads AFNOR

Pos. 3
2962.76. Guide Bars with three sliding surfaces

Pos. 4
2965.81. Single-sided prismatic Guides (Bronze)

Pos. 5
2965.83. Single-sided Prismatic Sliding Blocks (Steel)

Mounting Examples
Oilless Guide Elements

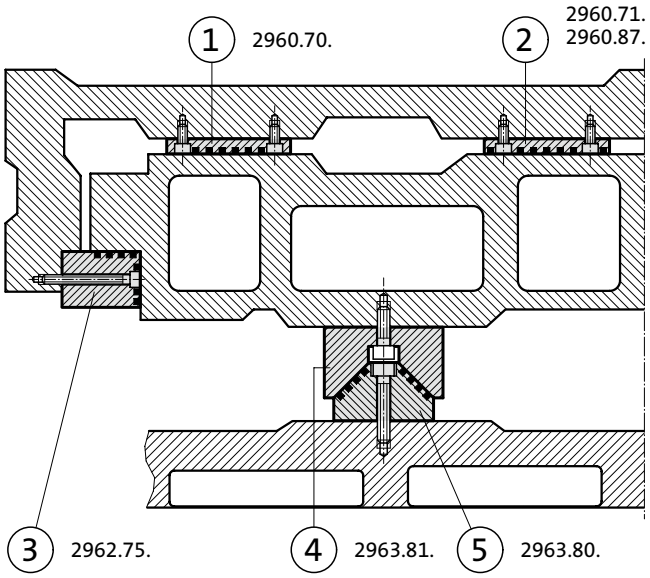

Pos. 1
2960.70. Sliding Pads ISO

Pos. 2
2960.71. Sliding Pads VDI
2960.87.

Pos. 3
2962.75. Guide Bars with two sliding surfaces

Pos. 4
2963.81. Prismatic Guides

Pos. 5
2963.80. Sliding Blocks

Centering unit with adjusting washer



2441.11.0.

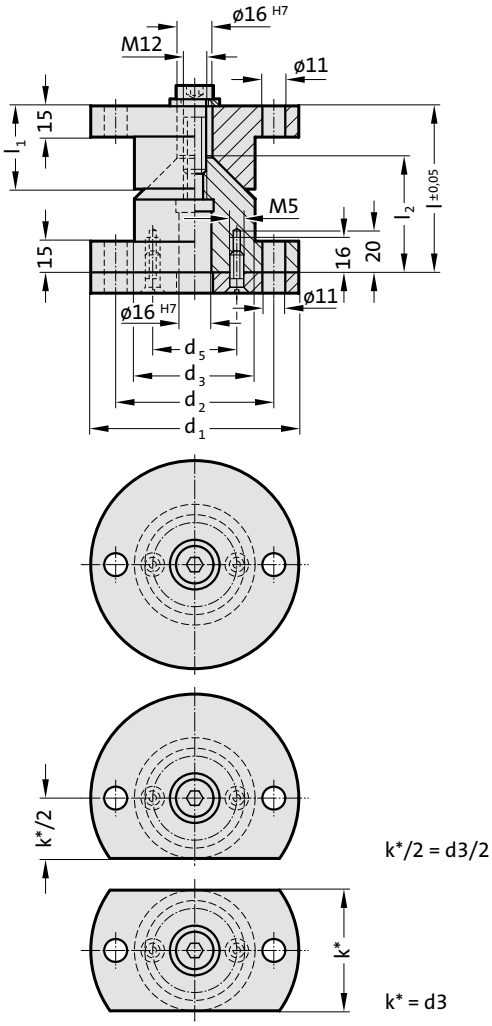

Material:

Centring Units: 16MnCr5, heat treated
Conical surfaces induction hardened
Surface hardness: 60 + 4 HRC, Eht: 1,0 + 0,5 mm
Adjusting washer: C45 or similar

Note:

Centring unit complete with adjusting washer.
Screws are included.

2441.11.0.□□□
Centring unit with adjusting washer

2441.11.0.□□□.1
Centring unit with one flat side with adjusting washer

2441.11.0.□□□.2
Centring unit with two flat sides with adjusting washer

2441.11.0. Centering unit with adjusting washer

Order No	d_1	d_2	d_3	l	l_1	l_2	d_5
2441.11.0.100	100	76	58	80	40	55	40.5
2441.11.0.100.1	100	76	58	80	40	55	40.5
2441.11.0.100.2	100	76	58	80	40	55	40.5
2441.11.0.120	120	96	78	90	50	65	50.5
2441.11.0.120.1	120	96	78	90	50	65	50.5
2441.11.0.120.2	120	96	78	90	50	65	50.5

subject to alterations

Centering unit

2441.11.

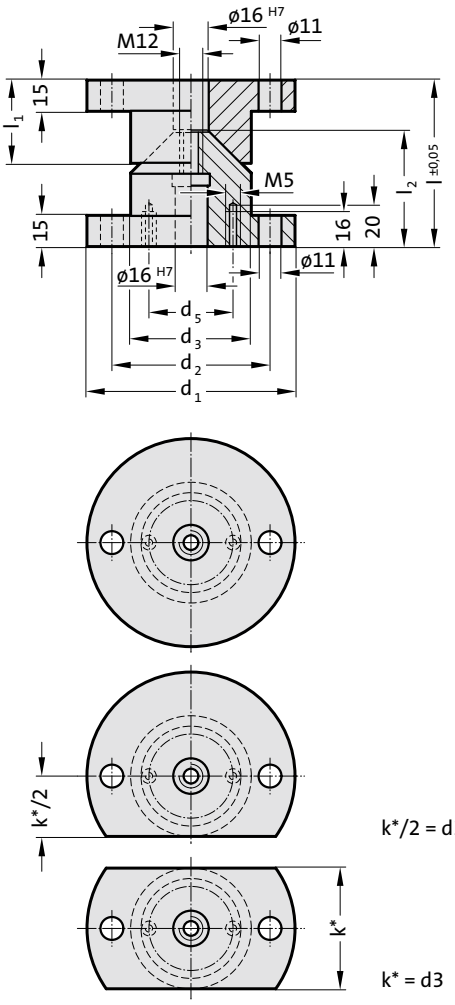

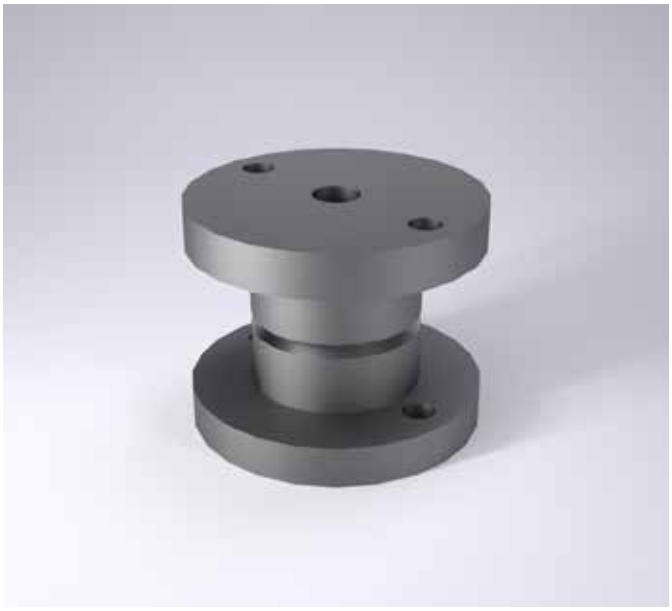

Material:

16MnCr5, heat treated
Conical surfaces induction hardened
Surface hardness: 60 + 4 HRC, Eht: 1,0 + 0,5 mm

Note:

Adjusting washer 2441.11.3. to be ordered separately.
Screws are not included.

2441.11.□□□
Centring unit

2441.11.□□□.1
Centring unit with one flat side

2441.11.□□□.2
Centring unit with two flat sides

2441.11. Centering unit

Order No	d_1	d_2	d_3	l	l_1	l_2	d_5
2441.11.100	100	76	58	80	40	55	40.5
2441.11.100.1	100	76	58	80	40	55	40.5
2441.11.100.2	100	76	58	80	40	55	40.5
2441.11.120	120	96	78	90	50	65	50.5
2441.11.120.1	120	96	78	90	50	65	50.5
2441.11.120.2	120	96	78	90	50	65	50.5

Adjusting washer

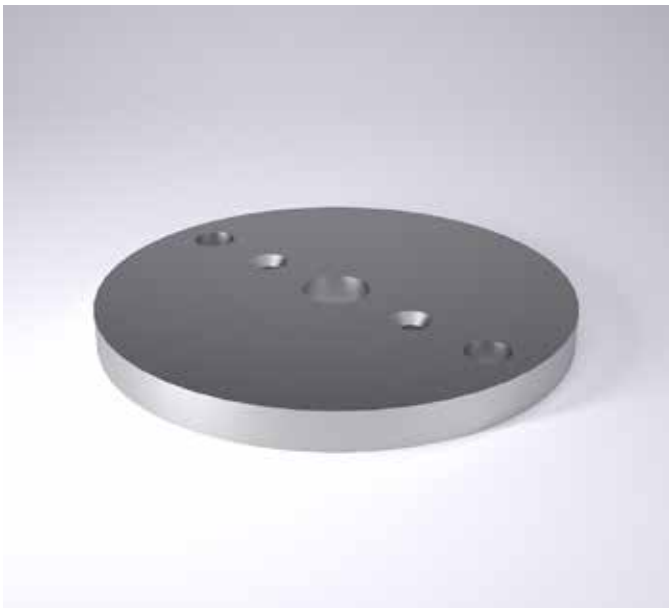

2441.11.3.

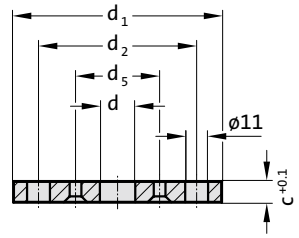

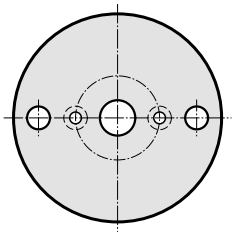

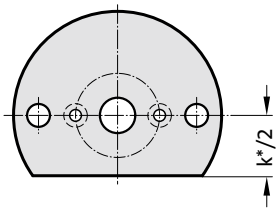

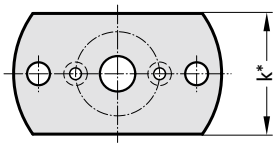

Material:
C45 or similar

Note:
2441.11.3.□□□
Adjusting washer

2441.11.3.□□□.1
Adjusting washer with one flat side

2441.11.3.□□□.2
Adjusting washer with two flat sides

2441.11.3. Adjusting washer

Order No	d_1	d_2	d_4	c	d_5	k
2441.11.3.100	100	76	17	9.8	40.5	58
2441.11.3.100.1	100	76	17	9.8	40.5	58
2441.11.3.100.2	100	76	17	9.8	40.5	58
2441.11.3.105	105	76	18	5.5	40.5	58
2441.11.3.120	120	96	17	9.8	50.5	78
2441.11.3.120.1	120	96	17	9.8	50.5	78
2441.11.3.120.2	120	96	17	9.8	50.5	78
2441.11.3.125	125	96	18	5.5	50.5	78

subject to alterations

Centring unit, CNOMO

2441.13.45.

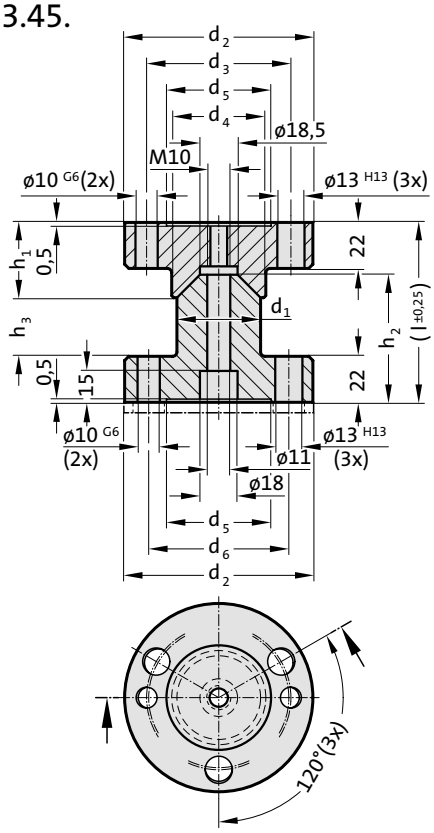



Material:
X153CrMoV12 (1.2379), hardened 58 ± 2 HRC

Note:
Order No for centring unit to CNOMO with adjusting washer: 2441.13.0.45.
Screws and pins are not included.

2441.13.45. Centring unit, CNOMO

Order No	d_1	d_2	d_3	d_4	d_5	d_6	h_1	h_2	h_3	l
2441.13.45.040	40	90	69	45	50	67	36	61	61	(86)
2441.13.45.060	60	110	89	65	70	89	46	61	61	(86)

Adjusting washer, CNOMO

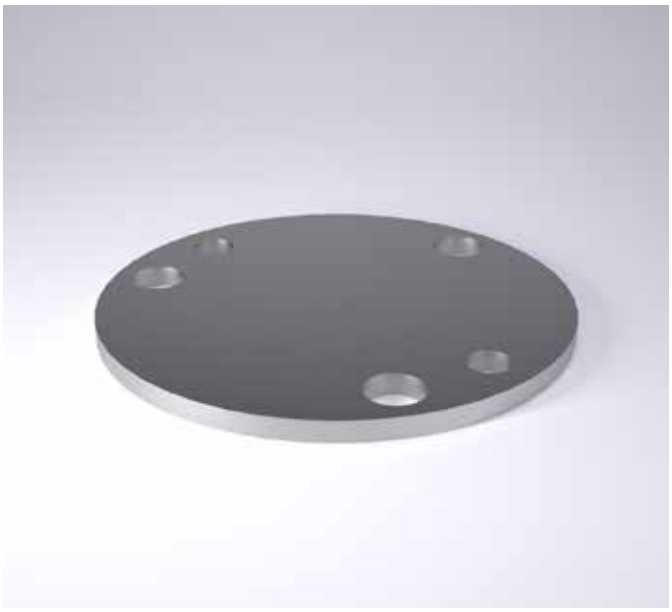

2441.13.3.45.

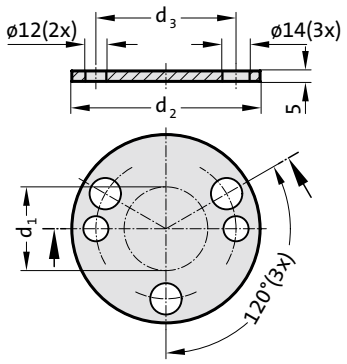

Material:
Cf 70 (1.1249)

Note:
Adjusting washer for centring unit 2441.13.45.

2441.13.3.45. Adjusting washer, CNOMO

Order No	d_1	d_2	d_3
2441.13.3.45.040	40	90	67
2441.13.3.45.060	60	110	89

subject to alterations

Centring unit, CNOMO

2441.13.

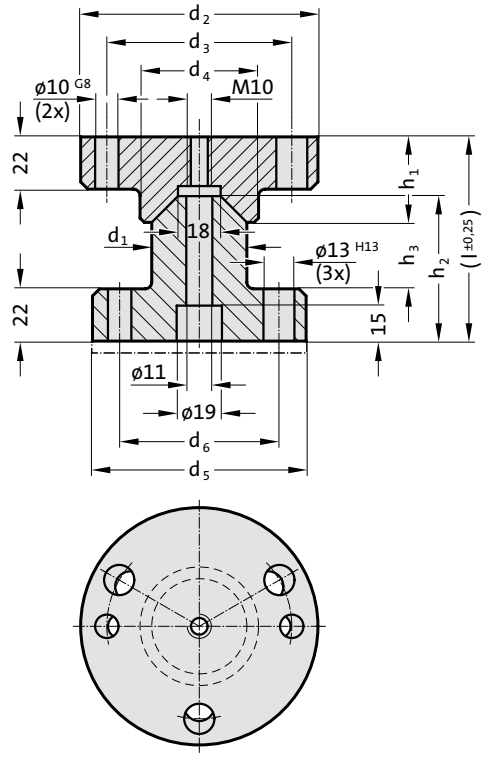

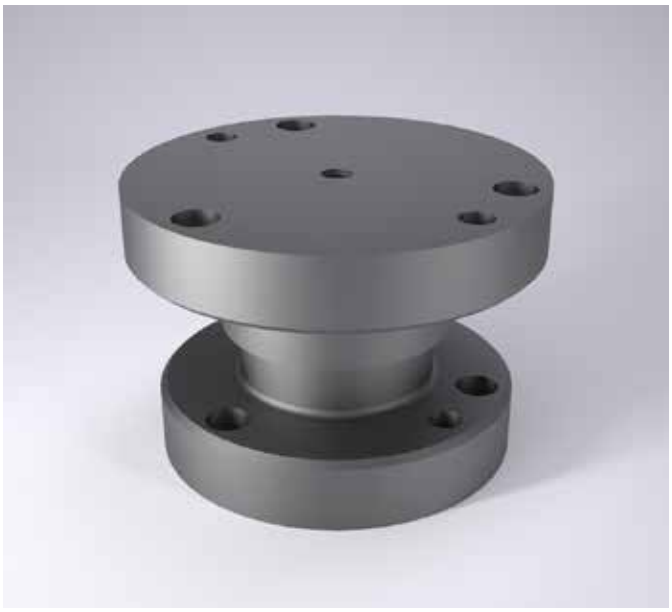

Material:

16MnCr5, heat treated
Conical surfaces induction hardened
Surface hardness: 60 + 4 HRC, Hardness penetration 1,0 + 0,5 mm

Note:

Order No for centring unit to CNOMO with adjusting washer: 2441.13.0.
Screws and pins are not included.

2441.13. Centring unit, CNOMO

Order No	d_1	d_2	d_3	d_4	d_5	d_6	h_1	h_2	h_3	(l)
2441.13.040	40	100	79	50	90	67	36	61	28	(86)
2441.13.060	60	125	104	70	110	89	46	61	18	(86)

Adjusting washer, CNOMO

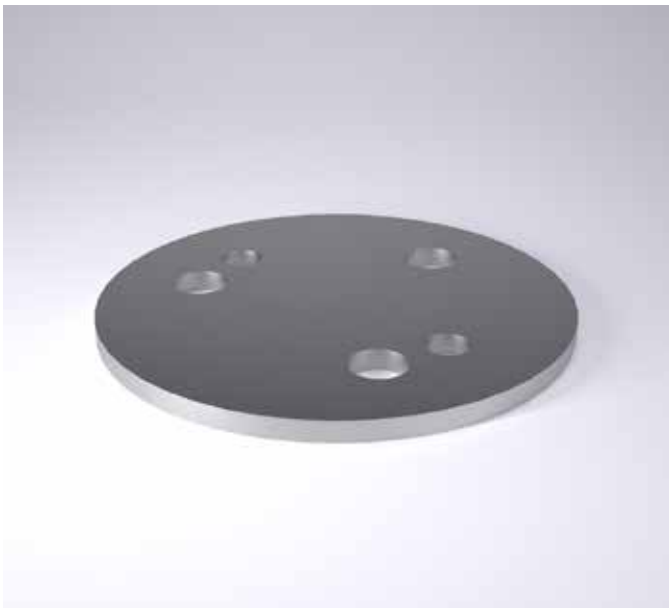

2441.13.3.

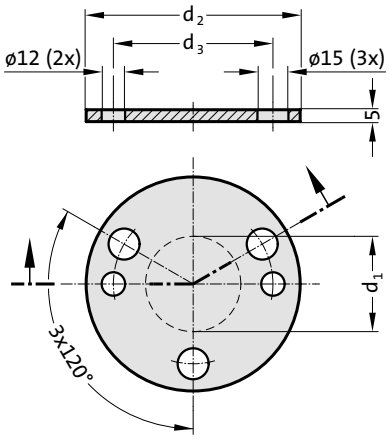

Material:
100 Cr 6

Note:
Adjusting washer for centring unit 2441.13.

2441.13.3. Adjusting washer, CNOMO

Order No	d_1	d_2	d_3
2441.13.3.040	40	90	67
2441.13.3.060	60	110	89

subject to alterations

Centring pin

2445.10.

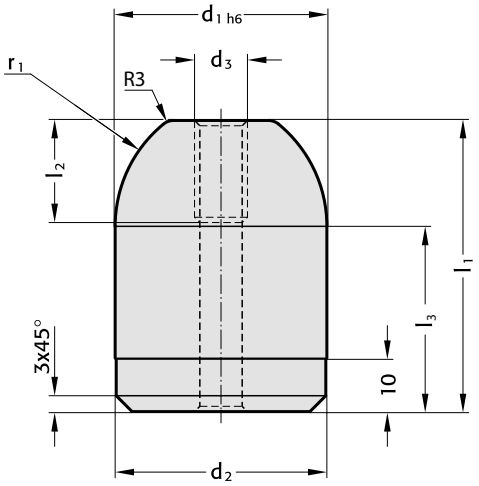



2445.10. Centring pin

Order No		d_1	d_2	d_3	l_1	l_2	l_3	r_1
2445.10.022.045	1), 2)	22	21.95	M8	45	16	35	15
2445.10.022.055	2)	22	21.95	M8	55	16	45	15
2445.10.032.050	1)	32	31.95	M10	50	20	35	20
2445.10.040.055	1), 2)	40	39.95	M10	55	20	35	25
2445.10.040.065	2)	40	39.95	M10	65	20	45	25
2445.10.050.055	1)	50	49.95	M10	55	20	35	25
2445.10.056.080	1)	56	55.95	M10	80	20	60	30

Description:

Using locating holes components, assemblies and tools can be repeatedly centred with high precision on processing machines, measuring equipment and tool components.

Material:

Steel, hardened

Note:

Screws are not included.
1) to BMW standard
2) to VW standard

Fixing:

Use socket cap screws DIN EN ISO 4762 M6/M8.

Mounting example

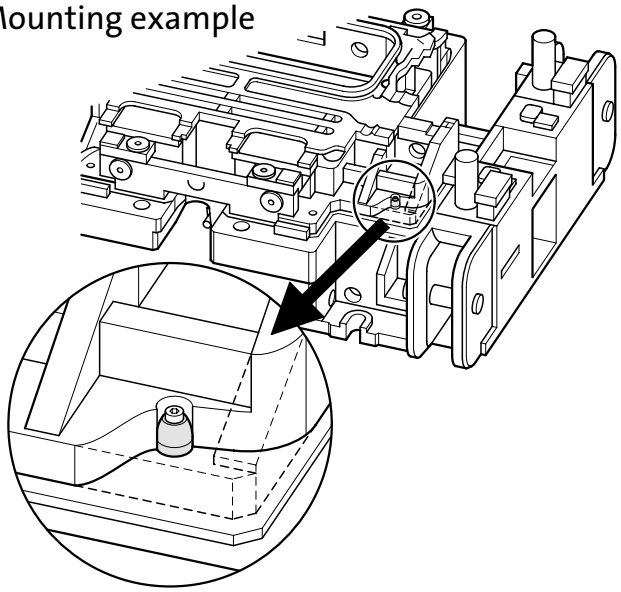

Mounting example

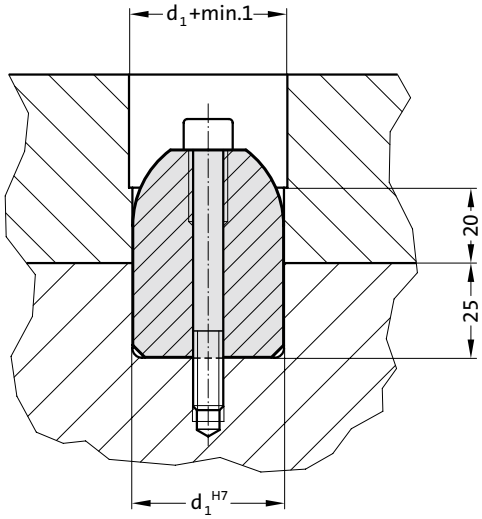

Centring pin to Mercedes-Benz standard



2445.11.

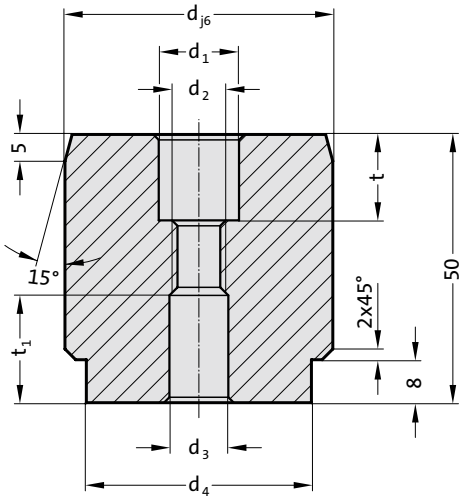

Description:

Using locating holes components, assemblies and tools can be repeatedly centred with high precision on processing machines, measuring equipment and tool components.

Material:

Steel, hardened

Note:

Screws are not included.

Fixing:

Use socket cap screws DIN EN ISO 4762 M6/M8.

2445.11. Centring pin to Mercedes-Benz standard

Order No	d	d_1	d_2	d_3	d_4	t	t_1
2445.11.022	22	11	M8	9	16	13	16
2445.11.025	25	11	M8	9	18	13	16
2445.11.032	32	11	M8	9	25	13	16
2445.11.040	40	15	M10	11	32	16	20
2445.11.050	50	15	M10	11	42	16	20

Mounting example

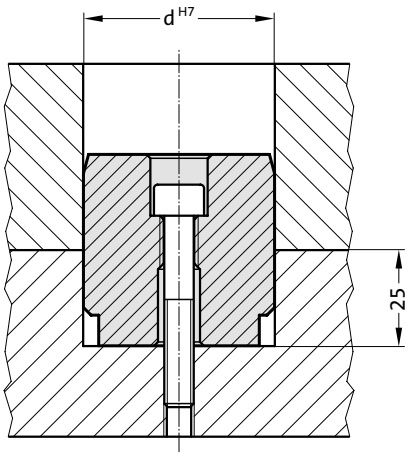

Mounting example

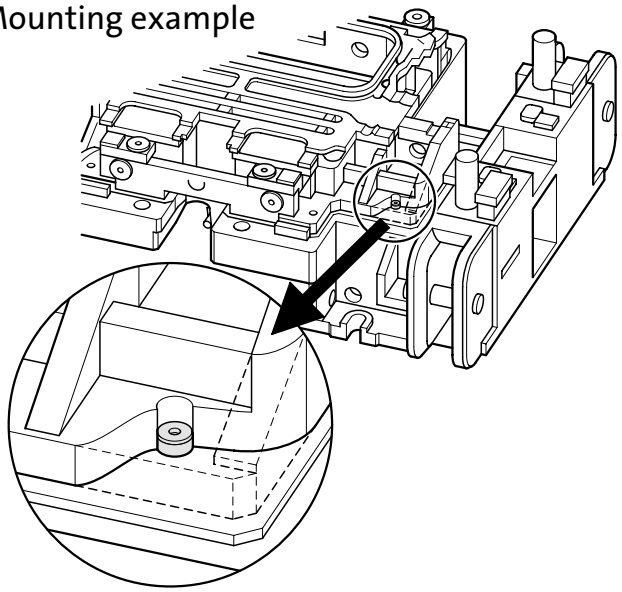

subject to alterations

Pressure bolt with base, according to VW

2446.10.55.03.

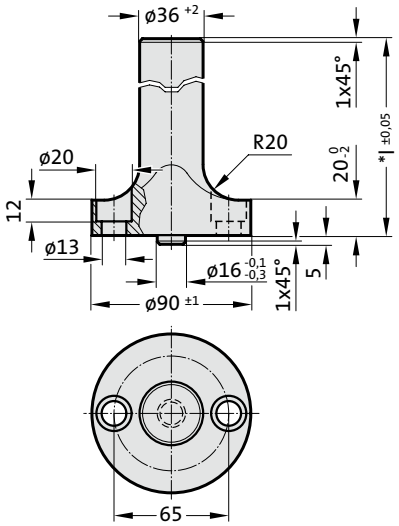



2446.10.55.02.

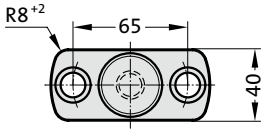

2446.10.55.04.

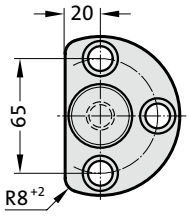

2446.10.55.05.

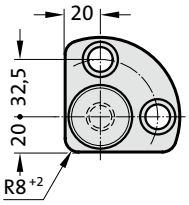

Description:

Pressure bolts with base are used to transfer force from the pressure cushion of the press to the tool.

Material:

C45 (1.0503), heat-treated 800 - 1000 N/mm²

Execution:

drop-forged

Note:

Screws are not included.

2446.10.55. Pressure bolt with base, according to VW

Order No	l*	Gradation l
2446.10.55.02.	150 - 360	1
2446.10.55.03.	150 - 360	1
2446.10.55.04.	150 - 360	1
2446.10.55.05.	150 - 360	1

*to customer's specifications!

Ordering Code (example):

Pressure bolt with base, according to VW		=	2446.10.55.
Execution Shape	4	=	04.
Length l	150 mm	=	150
Order No		=	2446.10.55. 04. 150

FIBRO

Air pin, according to VW standard

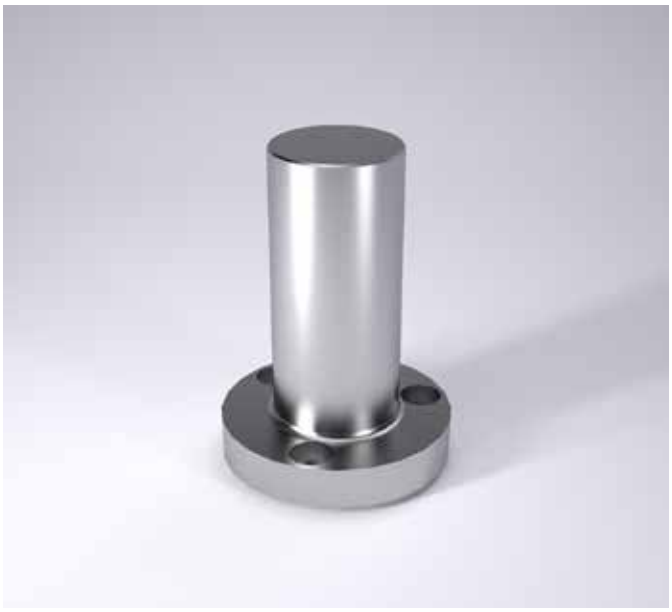

Description:
Air pins are used to transfer force from the pressure cushion of the press to the tool.

Material:
C45 (1.0503), heat-treated 800 - 1000 N/mm²

Execution:
drop-forged

Note:
Screws are not included.

2446.11.55.01.

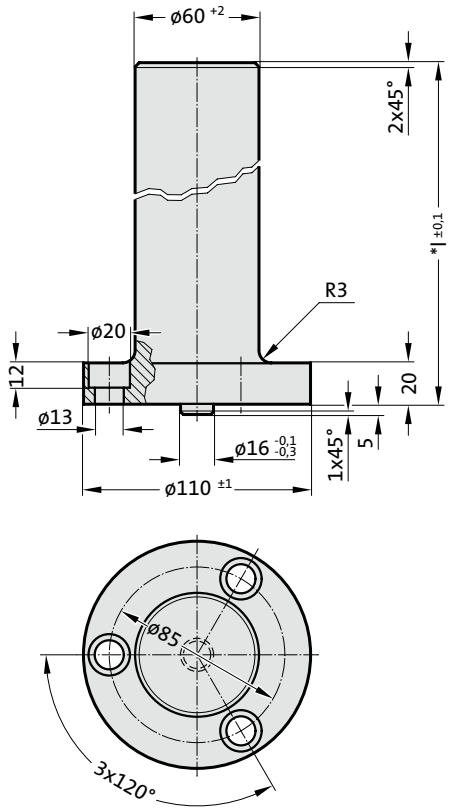

2446.11.55.02.

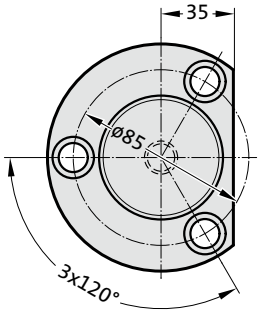

2446.11.55. Air pin, according to VW standard

Order No	l*	Gradation l
2446.11.55.01.	150 - 440	1
2446.11.55.02.	150 - 440	1

*to customer's specifications!

Ordering Code (example):

Air pin, according to VW standard		=2446.11.55.	
Execution Shape	2	=	02.
Length l	150 mm	=	150
Order No		=2446.11.55.02.	150

Concertina shroud with spacer bush

206.91.

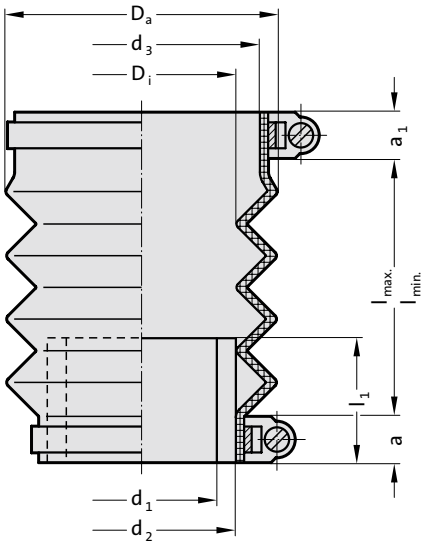



Note:

Concertina Shrouds are supplied complete with spacer bush and two hose clamps.
Special sizes on request.

Mounting example

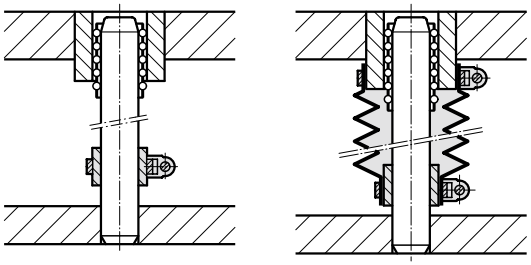

206.91. Concertina shroud with spacer bush

for guide bushes	2051./ 2061.	2051./ 2061.	2051./ 2061.	2051./ 2061.	2051./ 2061.	2051./ 2061.	2051./ 2061.	2081.	2081.	2081.	2081.	2081.	2081.	2081.
Pillar-ø d_1	19 20	24 25	30 32	38 40	48 50	60	63	19 20	24 25	30 32	38 40	48 50	60	63
d*	20	25	32	40	50	60	63	20	25	32	40	50	60	63
d_2	25	30	40	50	60	70	70	25	30	40	50	60	70	70
d_3	32	38	46	55	64	76	76	39	45	54	63	74	94	94
d_4**	32	38	48	58	58	79	79	40	45	54	66	80	95	95
D_i	30	30	46	55	62	75	75	32	32	45	52	62	75	75
D_a	51	56	72	87	86	100	100	54	56	63	96	84	104	104
a	13	13	20	12	12	12	12	10	10	10	12	12	10	10
a_1	16	13	20	12	12	10	10	10	10	10	12	12	10	10
l_1	20	30	30	40	40	40	40	20	30	30	40	40	40	40
l_{min}	30	25	20	44	25	30	30	37	35	35	25	45	35	35
l_{max}	170	130	100	119	110	130	130	145	110	110	225	165	185	185

*d = Nominal diameter, **d_4 = Nominal ordering diameter for flange diameter

Ordering Code (example):

Concertina shroud with spacer bush		=206.91.
Nominal diameter d	20 mm=	020.
Nominal ordering diameter for flange diameter d_4	40 mm=	040
Order No		=206.91. 020.040

FIBRO

Spacer bush
Spacer tube



206.93.

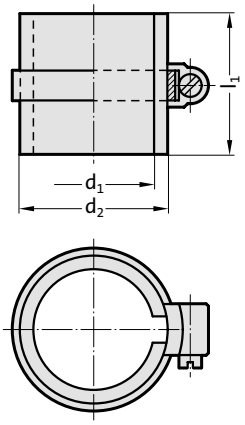

Material:
PMMA, PLEXIGLAS®

206.93. Spacer bush

Pillar-ø d_1	15 16	19 20	24 25	30 32	38 40	48 50	60	63
d*	16	20	25	32	40	50	60	63
d_2	20	25	30	40	50	60	70	70
l_1	20	20	30	30	40	40	40	40

*d = Nominal diameter

Ordering Code (example):

Spacer bush		=206.93.
Nominal diameter d	40 mm =	040
Order No		=206.93. 040



206.94.

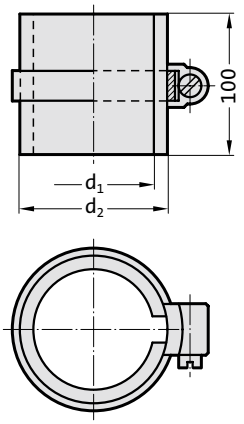

Material:
PMMA, PLEXIGLAS®

206.94. Spacer tube

Pillar-ø d_1	15/16	19/20	24/25	30/32	38/40	48/50	60	63
d*	16	20	25	32	40	50	60	63
d_2	20	25	30	40	50	60	70	70
l_1	100	100	100	100	100	100	100	100

*d = Nominal diameter

Ordering Code (example):

Spacer tube		=206.94.
Nominal diameter d	40 mm =	040
Order No		=206.94. 040

subject to alterations

Concertina shroud with spacer tube

206.92.

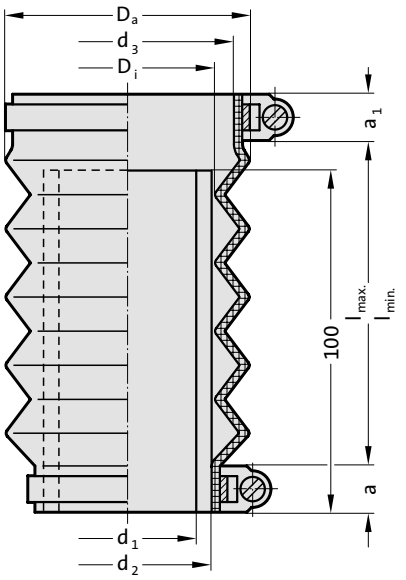



Note:

Concertina Shrouds are supplied complete with spacer tube and two hose clamps.
Special sizes on request.

Mounting example

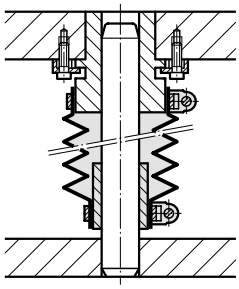

206.92. Concertina shroud with spacer tube

for guide bushes	2051./ 2061.	2051./ 2061.	2051./ 2061.	2051./ 2061.	2051./ 2061.	2051./ 2061.	2051./ 2061.	2081.	2081.	2081.	2081.	2081.	2081.	2081.
Pillar-ø d_1	19 20	24 25	30 32	38 40	48 50	60	63	19 20	24 25	30 32	38 40	48 50	60	63
d*	20	25	32	40	50	60	63	20	25	32	40	50	60	63
d_2	25	30	40	50	60	70	70	25	30	40	50	60	70	70
d_3	32	38	46	55	64	76	76	39	45	54	63	74	94	94
d_4**	32	38	48	58	58	79	79	40	45	54	66	80	95	95
D_i	30	30	46	55	62	75	75	32	32	45	52	62	75	75
D_a	51	56	72	87	86	100	100	54	56	63	96	84	104	104
a	13	13	20	12	12	12	12	10	10	10	12	12	10	10
a_1	16	13	20	12	12	10	10	10	10	10	12	12	10	10
l_1	100	100	100	100	100	100	100	100	100	100	100	100	100	100
l_{min}	30	25	20	44	25	30	30	37	35	35	25	45	35	35
l_{max}	170	130	100	119	110	130	130	145	110	110	225	165	185	185

*d = Nominal diameter, **d_4 = Nominal ordering diameter for flange diameter

Ordering Code (example):

Concertina shroud with spacer tube		=206.92.
Nominal diameter d	20 mm=	020.
Nominal ordering diameter for flange diameter d_4	40 mm=	040
Order No		=206.92.020.040

Helical spring for ball cage retention



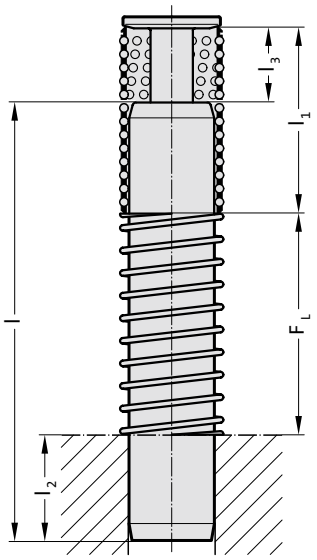

241.18.

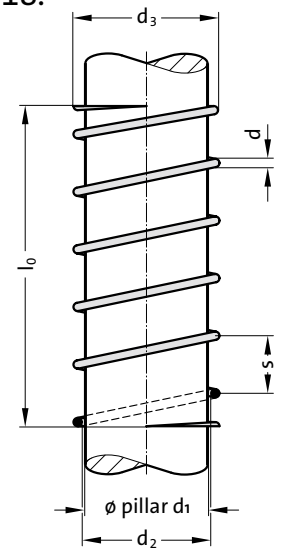

Calculation:

Formula for selecting spring 241.18.:
$F_L = [l - (l_2 + (l_1 - l_3))] \times 1{,}1$
Formula for calculating the block length L_{BL} of the selected spring:
$L_{BL} = (l_0 \times d : s) + 2 \times d$
F_L = Length of compressed spring
l = Length of guide pillar (Customer specified)
l_1 = Cage length (Customer specified)
l_2 = Compression length of guide pillar (Customer specified)
l_3 = Ball cage retainer size (Customer specified)
1.1 = Safety factor
l_0 = Length of uncompressed spring
d = Spring wire diameter
s = Pitch

241.18. Helical spring for ball cage retention

d_1	d_2	d_3	s	d	l_0	Gradation l_0
19/20	20.5	22.5	14	1	40 - 140	10
24/25	25.5	27.9	14	1.2	40 - 160	10
30/32	32.5	35.7	16	1.6	50 - 230	10
38	38.5	42.5	18	2	60 - 230	10
40	40.5	45.1	20	2.3	60 - 230	10
48/50	50.5	55.7	20	2.6	70 - 280	10
60	60.5	66.9	20	3.2	80 - 250	10
63	63.5	69.9	20	3.2	80 - 250	10

Ordering Code (example):

Helical spring for ball cage retention		=241.18.	
Inside diameter d_2	40.5 mm	=	405.
Length l_0	60 mm	=	060
Order No		=241.18.	405. 060

Mounting example

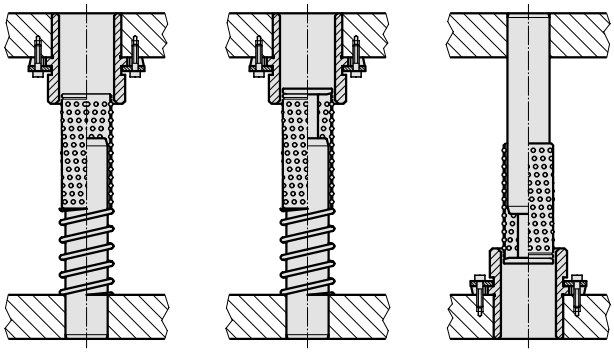

Without ball cage retainer

With ball cage retainer 202.91.

With ball cage retainer 202.91.

Mounting example

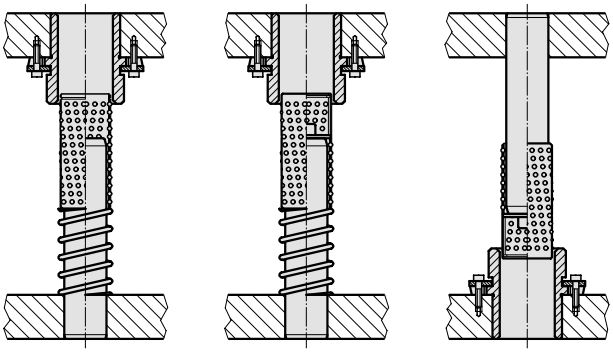

Without ball cage retainer

With ball cage retainer 202.92.1.

With ball cage retainer 202.92.1.

subject to alterations

Cage retainer

202.91.

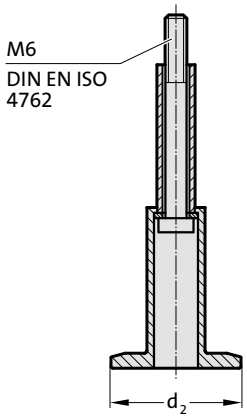

Mounting example

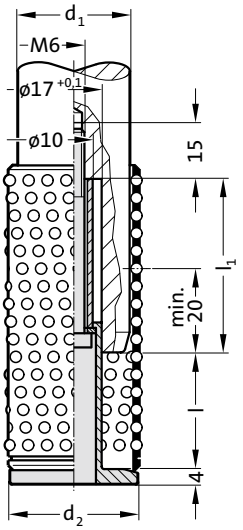



Note:

The following guide pillars can be equipped with this cage retainer.

Guide pillars without cage retainer -	become guide pillars with cage retainer:
202.19. -	202.17.
202.21. -	202.55.
2021.46. -	2021.44.
2021.50. -	2021.58.

202.91. Cage retainer

d_1	38	40	48	50	60	63
d_2	42	44	52	54	64	67
KG (l / l_1)						
1 (31 / 46)	●	●	●	●	●	●
2 (41 / 56)	●	●	●	●	●	●
3 (51 / 66)	●	●	●	●	●	●
4 (61 / 76)	●	●	●	●	●	●
5 (73 / 89)	●	●	●	●	●	●

Ordering Code (example):

Cage retainers		=202.91.
Guide diameter d_1	50 mm	= 050.
Cage retainer size KG	1	= 1
Order No		=202.91. 050.1

Cage retainer

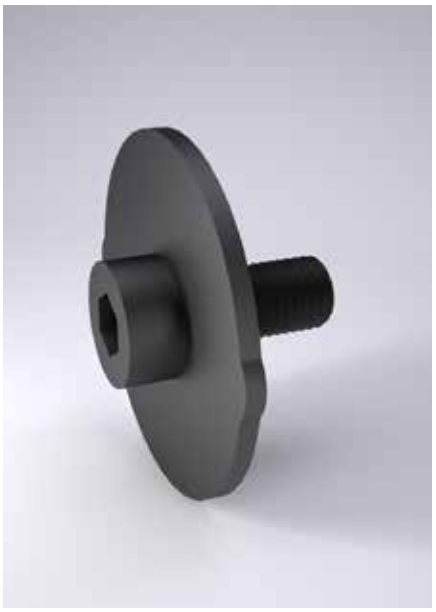

Mounting example

order separately:
206.75. Ball Cage
2060.65. Ball Cage

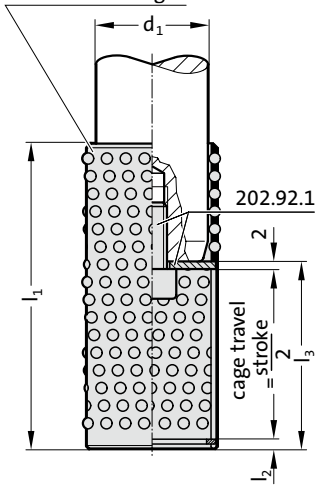

202.92.1.

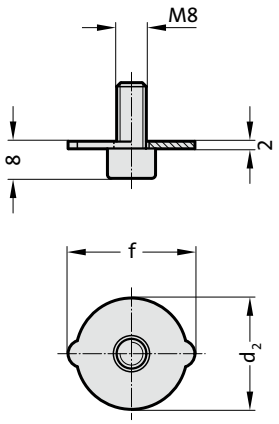

Note:

The following guide pillars can be equipped with this cage retainer:
202.22.
202.24.
2021.46.
2021.50.

202.92.1. Cage retainer

d_1	19	20	24	25	30	32	38	40	48	50	60	63
d_2	18	19	23	24	29	31	37	39	47	49	59	62
f	22	23	27	28	34	36	42	44	52	54	64	67

Ordering Code (example):

Cage retainer		=202.92.1.
Guide diameter d_1	38 mm =	038
Order No		=202.92.1. 038

Cage retainer

202.93.

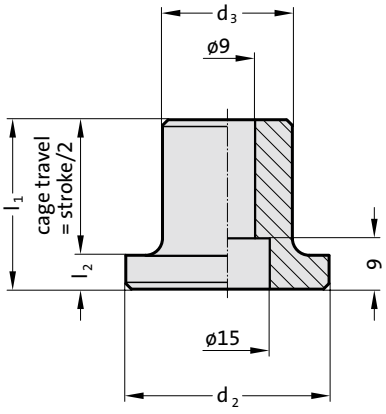

Mounting example

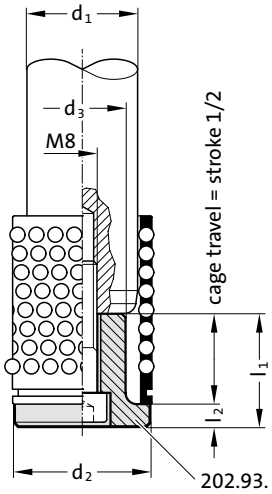



Note:

The following guide pillars can be equipped with this cage retainer:
202.22.
202.24.
2021.46.
2021.50.

Screws are not included.

Fixing:

Use socket cap screws DIN EN ISO 4762 for ordering size:
03. - 2192.12.08.035
04. - 2192.12.08.045
05. - 2192.12.08.055
06. - 2192.12.08.070
08. - 2192.12.08.090

202.93. Cage retainer

Order No	d_1	d_2	d_3	l_1	l_2
202.93.03.030	30 o.32	36	23	30	6
202.93.04.040	38 o. 40	44	31	40	6
202.93.05.050	48 o. 50	54	39	50	8
202.93.06.060	60 o. 63	66	51	60	8
202.93.08.080	80	89	71	80	8

Pillar wiper



Mounting example

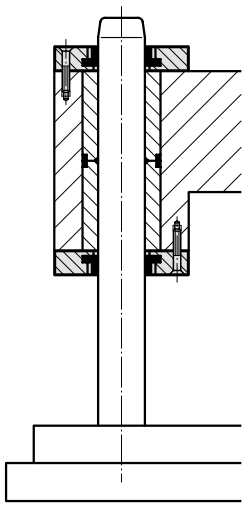

206.95.
2061.95.

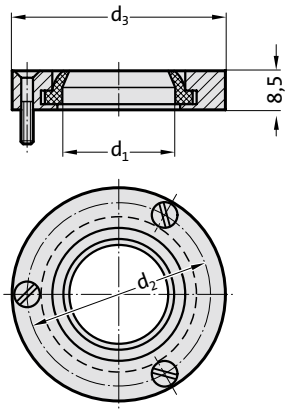

Description:

FIBRO Pillar Wipers protect against premature wear caused by the ingress of dirt into the die set guides.
Outside diameters match boss dias. on FIBRO Die Sets (Cast Iron). They can be fitted onto the bolster, or into a counterbore – flush with the bolster surface.

Note:

Pillar Wipers will be delivered with 3 screws M 4 × 16 DIN 963.

206.95./2061.95. Pillar wiper

Order No	d_1	d_2	d_3
206.95.024	24	45	55
206.95.025	25	45	55
206.95.030	30	55	65
206.95.032	32	55	65
206.95.038	38	65	75
206.95.040	40	65	75
206.95.042	42	65	75
206.95.048	48	78	94
206.95.050	50	78	94
206.95.052	52	78	94
206.95.060	60	92	110
206.95.063	63	92	110
2061.95.024	24	50	60
2061.95.025	25	50	60

subject to alterations

Lifter pin for press tool strips

244.00.2.

Mounting example

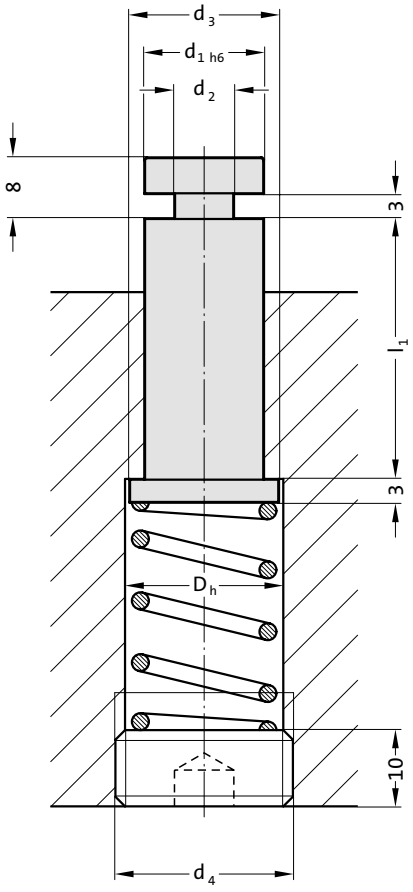

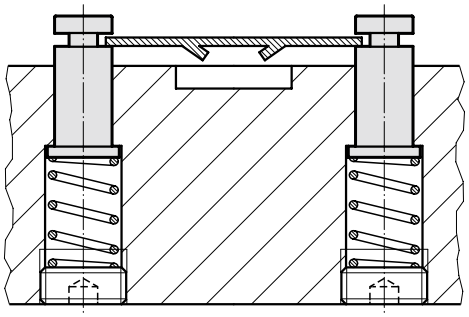



Description:

Combination progression dies with certain forming stages can be equipped advantageously with springloaded lifter pins. FIBRO Lifter Pins 244.00.2., available in four sizes, can be used to assume the double function of lifting and guiding the strip. The amount of lift is a function of the counterbore-depth.

Material:

1.7131, case-hardened

Execution:

ground

Note:

For ordering code of screw plug 241.00.1. and helical spring see spring range on pages chapter F.

244.00.2. Lifter pin for press tool strips

d_1	8	10	13	16
d_2	5	6	7	8
d_3	10	12	16	20
D_h	10.5	12.5	16.5	20.5
d_4	M12x1.5	M14x1.5	M18x1.5	M22x1.5
l_1				
20	●			
25	●	●	●	
32	●	●	●	●
40	●	●	●	●
50		●	●	●

Ordering Code (example):

Lifter pin for press tool strips		=244.00.2.
Guide diameter d_1	13 mm =	13.
Guide length l_1	25 mm =	025
Order No		=244.00.2.13. 025

Screw clamp with screw



207.45

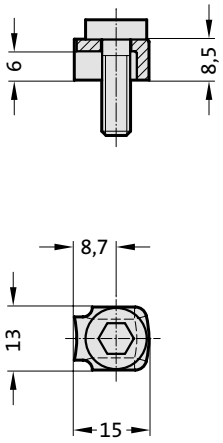

Screw clamp
incl. screw
- steel punched bent component
- clamping height 6-6,3 mm
- M6 screw



2071.45

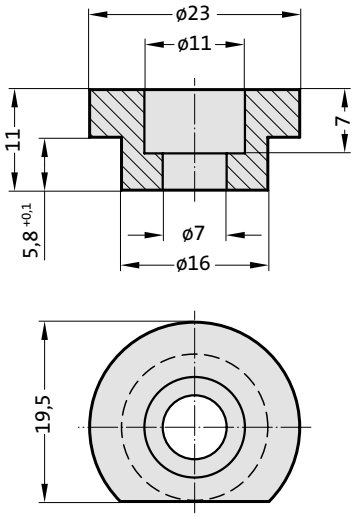

Screw clamp
incl. screw
- clamping height 6 mm
- M6 screw

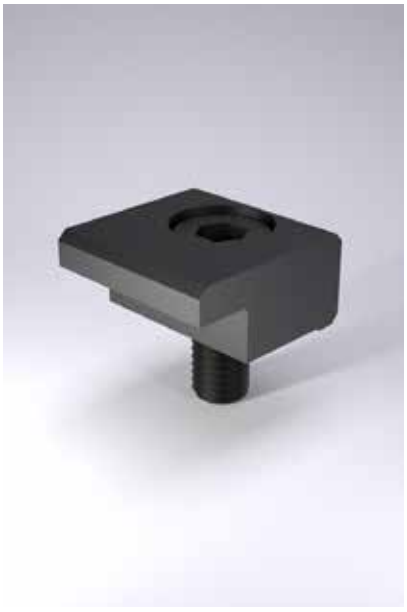

2072.45.10.

2072.45.16.

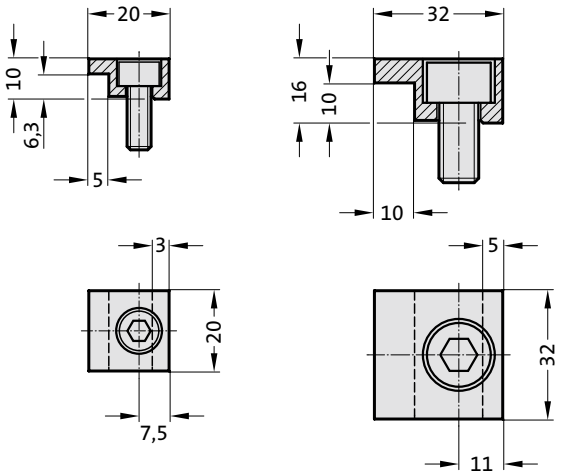

Screw clamp
incl. screw
2072.45.10
- Steel, milled
- clamping height 6-6,3 mm
- M6 screw

2072.45.16
- Steel, milled
- clamping height 10 mm
- M10 screw

subject to alterations

Screw clamp with screw
Screw clamp with screw, GM Standard
Screw clamp with screw, NAAMS

Screw clamp

incl. screw
- Steel, milled
- clamping height 6-6,3 mm
- M10 screw

2072.46

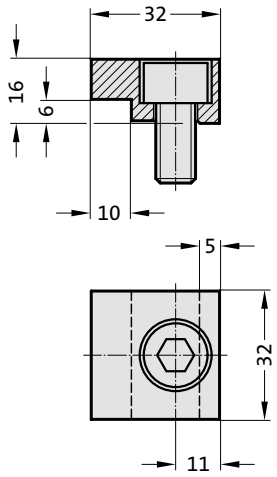



Screw clamp

according to GM, incl. screw
2072.46.30.12
- Steel, milled
- clamping height 6 mm
- M8 screw

2072.46.30.16
- Steel, milled
- clamping height 6 mm
- M10 screw

2072.46.30.12

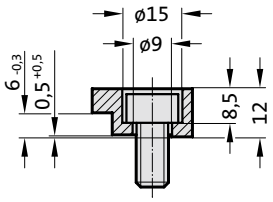

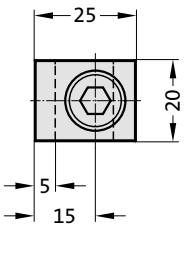

2072.46.30.16

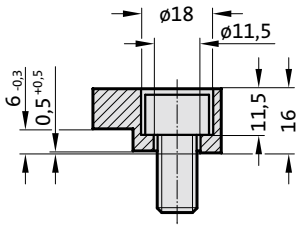

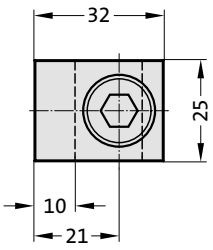



Screw clamp

according to NAAMS, incl. screw
- steel punched bent component
- clamping height 6-6,3 mm
- M8 screw

2072.47

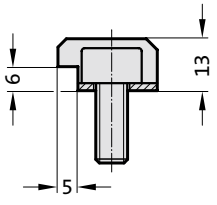

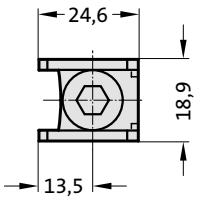



Securing flange with screws, CNOMO
Screw clamp with screw, CNOMO



2073.45.

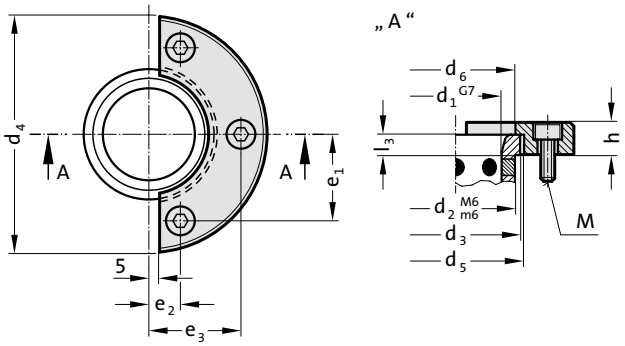

Securing flange

according to CNOMO, incl. screws
- steel, turned
- clamping height 4, 5, 6, 8, 10, 12, 16, 20 mm
- M6, M8, M10, M12 screws

2073.45. Securing flange with screws, CNOMO

Order No	d_1	d_2	d_3	d_4	d_6	h	l_3	e_1	e_2	e_3	M
2073.45.020	20	28	32	63	25	10	4	16	18	-	6x16
2073.45.025	25	35	40	72	32	10	5	20	20	-	6x16
2073.45.032	32	44	50	80	40	12	6	25	21	-	6x16
2073.45.040	40	52	60	100	50	12	8	38.5	14	41	6x16
2073.45.050	50	63	71	125	63	16	10	46	17	49	8x20
2073.45.063	63	80	90	140	80	20	12	55	17	57.5	10x25
2073.45.080	80	100	112	180	100	25	16	70	20	72	12x30
2073.45.100	100	125	140	200	125	32	20	81	25	85	12x30





2072.48.45.

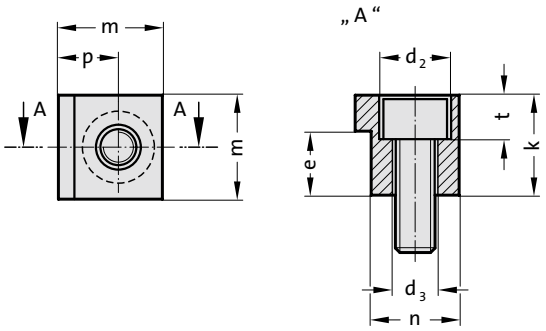

Screw clamp

according to CNOMO, incl. screw
- Steel, milled
- clamping height 8, 10, 12, 16, 20 mm
- M6, M8, M10 screw

2072.48.45. Screw clamp with screw, CNOMO

Order No	k	e	d_2	d_3	t	m	p	n	d_1	M
2072.48.45.12	12	8	11	6.6	6.8	18	9.5	15.5	40	6x16
2072.48.45.16	16	10	15	9	9	22	12	19	50	8x20
2072.48.45.20	20	12	18	11	11	26	15	21	63	10x25
2072.48.45.25	25	16	18	11	11	26	15	21	80	10x30
2072.48.45.32	32	20	18	11	11	26	15	21	100	10x35



subject to alterations

Spacer plate toothed, with adjusting plate

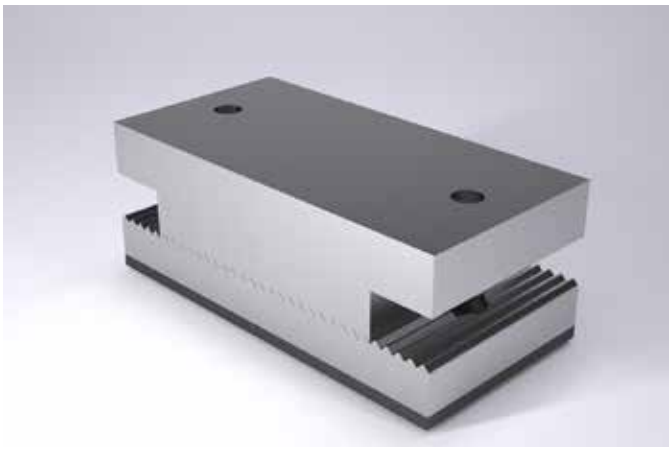

2444.12 / 2444.13

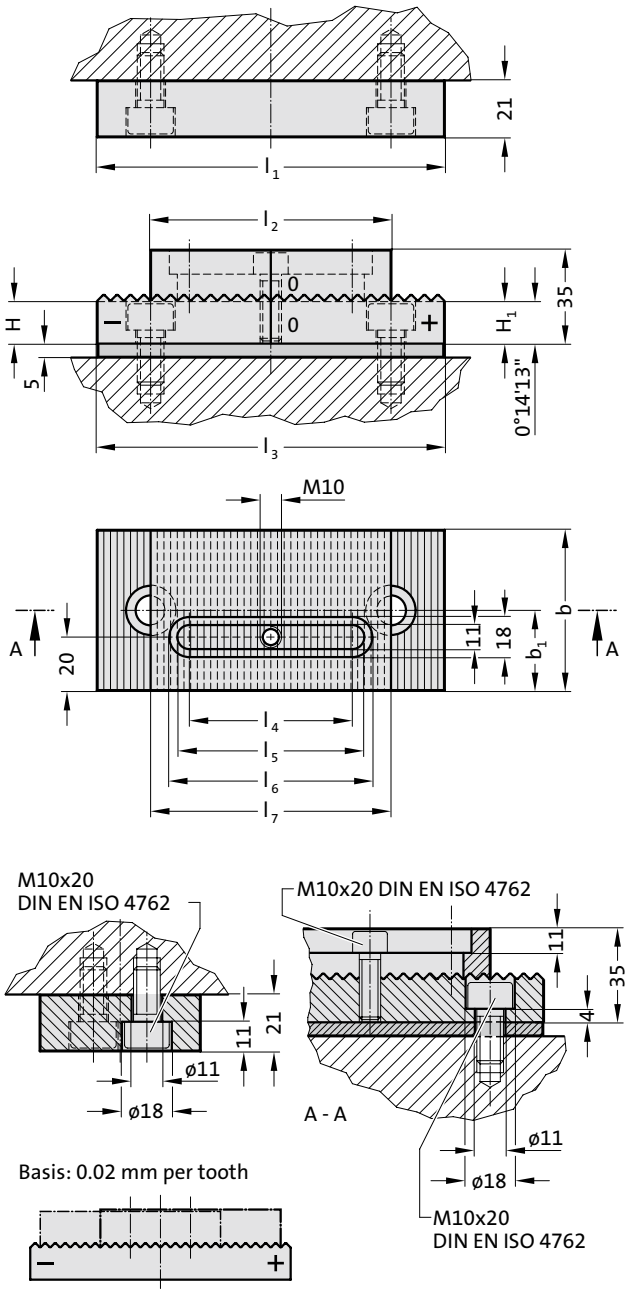

Material:
Spacer plates: X 210 Cr 12 (1.2080), hardened 58 + 2 HRC
Adjusting plate: X 153 CrMoV 12 (1.2379)

Description:
For spacing out sheet metal retainers in tools for external skin parts.

Note:
Screws are not included.

'0'= basic setting in the middle (grinding-in)
'+'= adjustment to the right - plus
'-' = adjustment to the left - minus

NB: Hole pattern
The bolsters are reversible.

Adjustment range:
2444.12
12 increments each of 0.02 mm means an adjusting range of 0.24 mm with a minimum support area of 80 x 60 mm.
2444.13
14 increments each of 0.02 mm means an adjusting range of 0.28 mm with a minimum support area of 100 x 80 mm.

2444.12/2444.13 Spacer plate toothed, with adjusting plate

Order No	l_1	l_2	l_3	l_4	l_5	l_6	l_7	b	b_1	H	H_1
2444.12	130	90	130	61	72	79	90	60	30	15.5	16.04
2444.13	160	110	160	71	82	89	120	80	40	15.5	16.16

subject to alterations

Guide

2443.10.

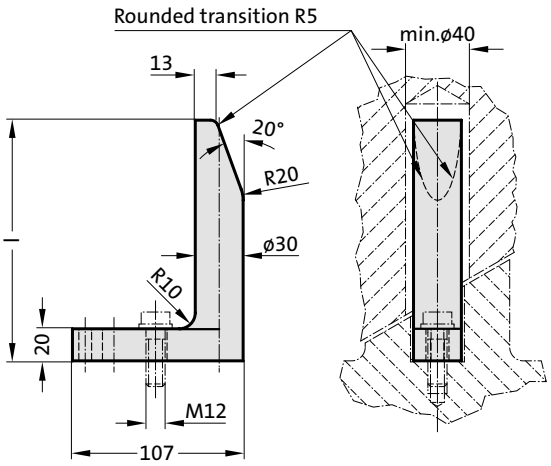



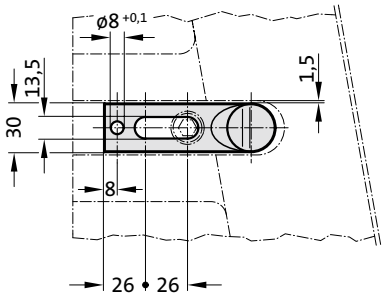

Material:
Ck 60, hardened 58 + 2 HRC

Execution:
forged

2443.10. Guide

Order No	l
2443.10.065	65
2443.10.090	90
2443.10.120	120
2443.10.150	150
2443.10.180	180
2443.10.250	250
2443.10.300	300
2443.10.350	350

Guide to Mercedes-Benz Standard - unhardened



2443.10.20.

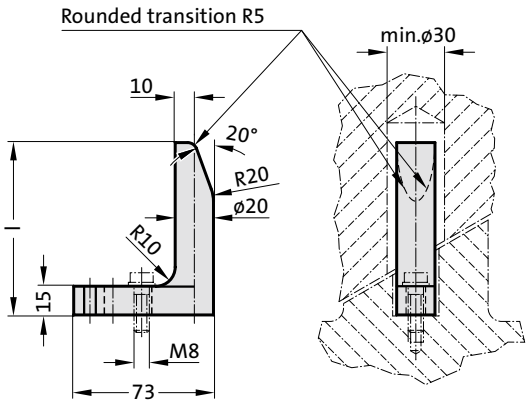

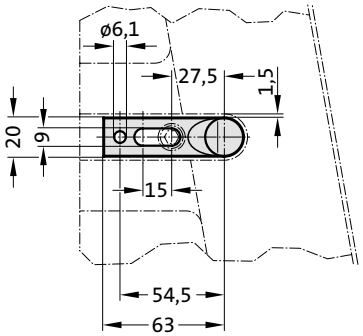

Material:
Ck 60

Execution:
forged

Note:
Guides are preferably used in confined spaces in sequential compound dies.

2443.10.20. Guide to Mercedes-Benz Standard - unhardened

Order No	l
2443.10.20.065	65
2443.10.20.090	90

Guide to Mercedes-Benz Standard - hardened

2443.10.20. .1



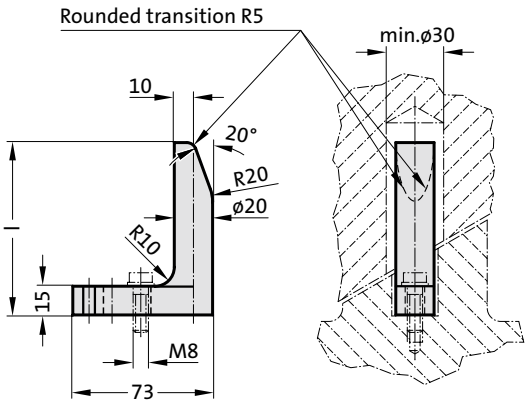

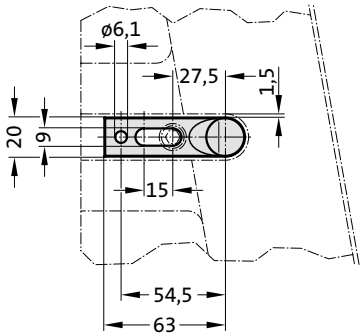

Material:
Ck 60, hardened 58 + 2 HRC

Execution:
forged

Note:
Guides are preferably used in confined spaces in sequential compound dies.

2443.10.20. .1 Guide to Mercedes-Benz Standard - hardened

Order No	l
2443.10.20.065.1	65
2443.10.20.090.1	90

Guide with part position control and spring



2443.12.

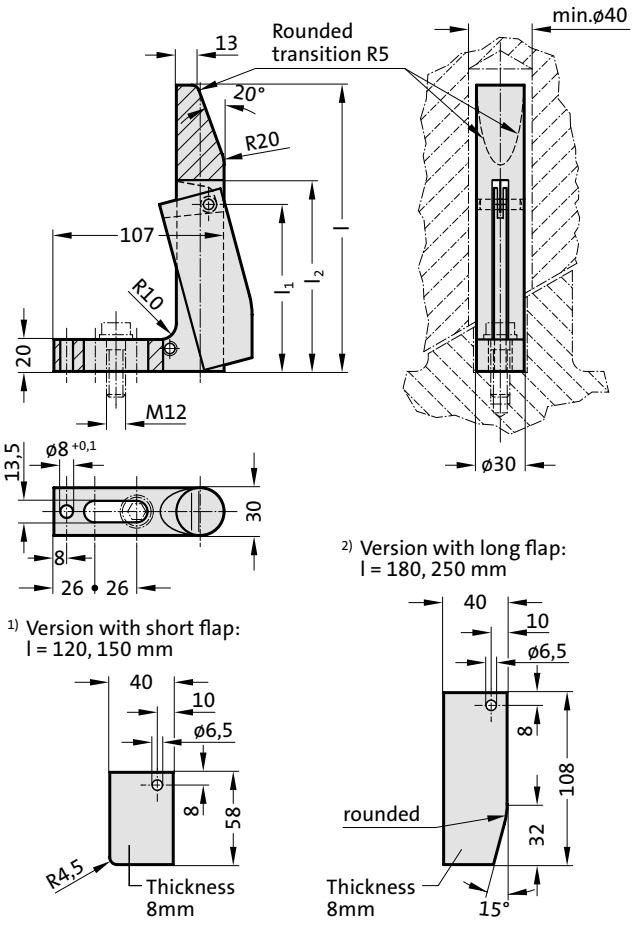

Mounting example

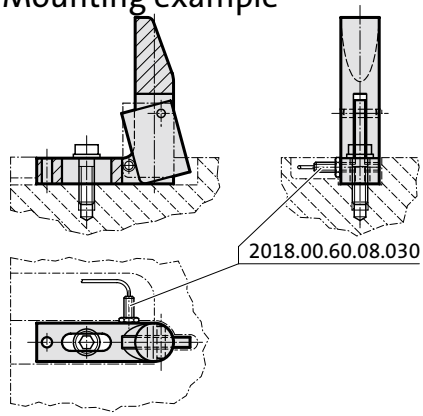

Material:

Guide: Ck 60, hardened 50 + 5 HRC
Flap: St 37
Spring: Spring steel wire

Execution:

forged

Note:

See following pages for accessories.

2443.12. Guide with part position control and spring

Order No	l	l_1	l_2
2443.12.120	120	55	70
2443.12.150	150	55	70
2443.12.180	180	105	120
2443.12.250	250	105	120

subject to alterations

Guide with part position control, VDI

2443.13.

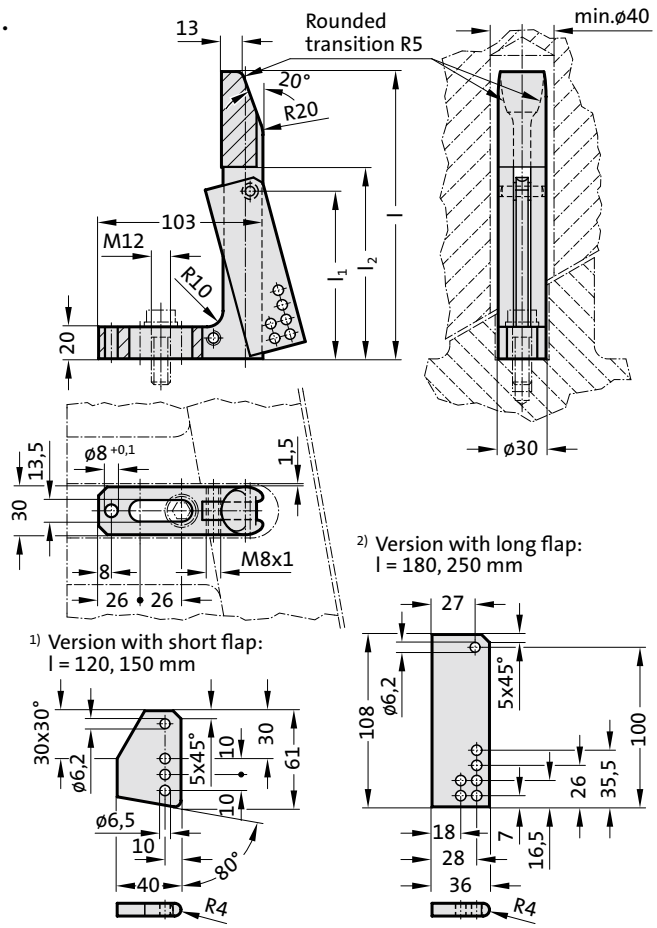



Mounting example

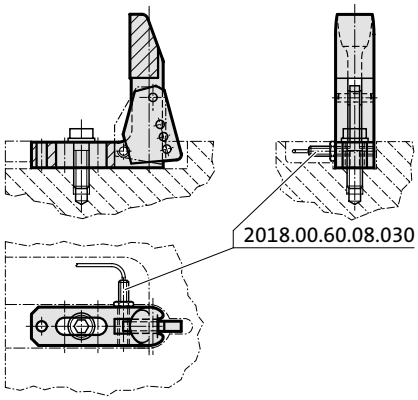

Material:

Guide: Ck 60, hardened 50 + 5 HRC
Flap: St 37, hardened 58 + 2 HRC

Execution:

forged

Note:

See following pages for accessories

2443.13. Guide with part position control, VDI

Order No	l	l_1	l_2
2443.13.120	120	55	70
2443.13.150	150	55	70
2443.13.180	180	105	120
2443.13.240	240	105	120

Inductive proximity switch



2018.00.60.08.030

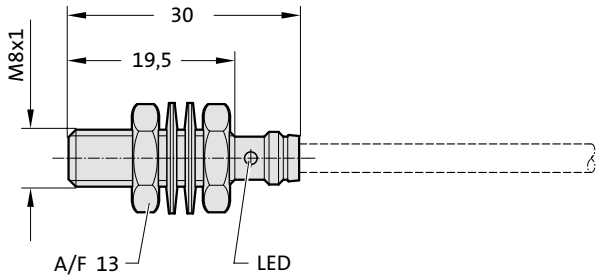

Technical data

2018.00.60.08.030 Inductive proximity switch

Rated operating voltage Ue: 24 V DC
Operating Voltage Us: 10-30 V DC
No load current I_0 damped/undamped: ≤ 8 mA/≤ 1 mA
Repeat accuracy R: ≤ 5%
Ambient temperature Ta: -40 to +85 °C
Switching frequency f: 3000 Hz
Degree of protection to IEC 529: IP 67
Casing material: Stainless steel
Connection: plug connector
Approvals: UL

Cable - straight
Cable , 90° connector

2018.00.60.23.01.5

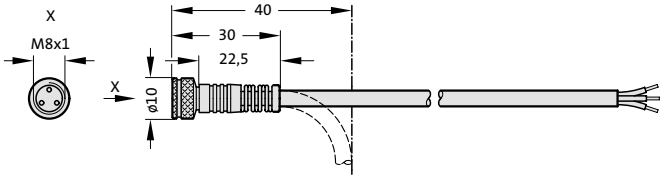



2018.00.60.23.01.5 Cable - straight

Technical data
Cable type: 3 pole, M8, oil resistant
Standard length: 5 m

Other lengths on request

2018.00.60.23.02.5

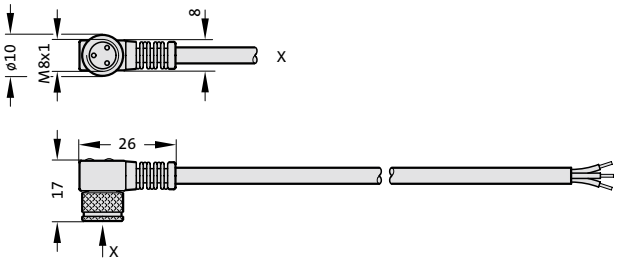



2018.00.60.23.02.5 Cable , 90° connector

Technical data
Cable type: 3 pole, M8, oil resistant
Standard length: 5 m

Other lengths on request

Position monitor for boards

2443.14.55.

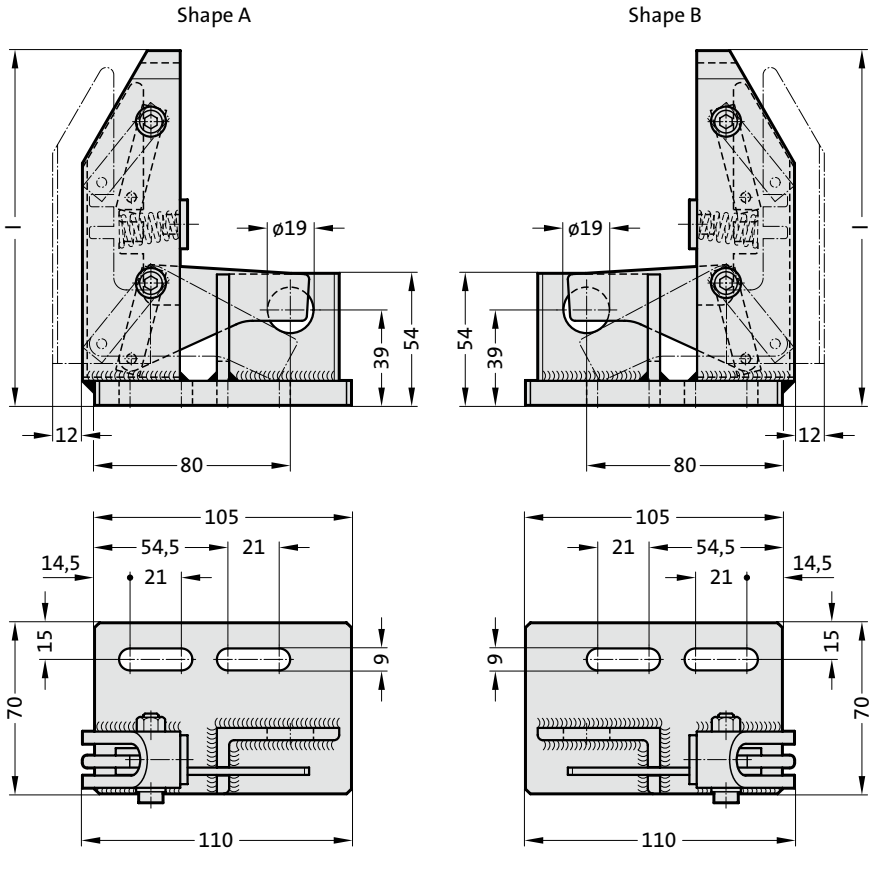



Mounting example

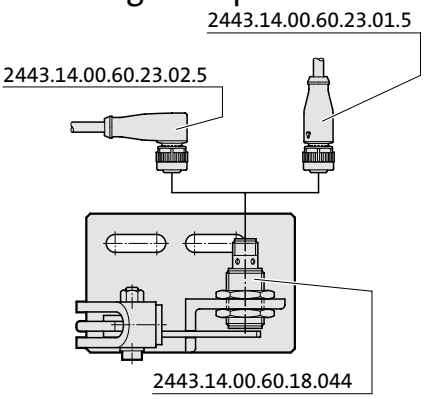

Material:
Steel

Note:
See following pages for accessories.

Attention:
At least two position monitors must be installed crosswise. In case of large parts, such as the side part, a third position monitor should be placed. The position monitors should be placed in such a way that a perfect querying of the sheet metal part is guaranteed. Position monitors should be arranged a minimum of 5 mm away from the pulling or locking bards and not within the range of strong sheet movement.

2443.14.55. Position monitor for boards

Order No	l	Shape
2443.14.55.01	145	A
2443.14.55.02	145	B
2443.14.55.03	185	A
2443.14.55.04	185	B
2443.14.55.25	225	A
2443.14.55.26	225	B

Inductive proximity switch



2443.14.00.60.18.044

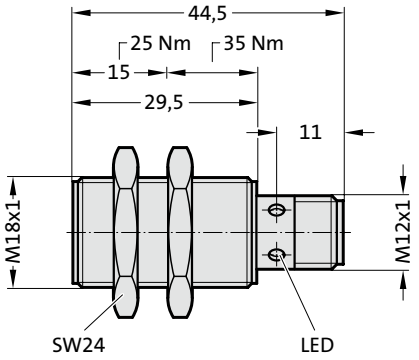

Technical data:

Rated operating voltage Ue: 24 V DC
Operating Voltage Us: 10-30 V DC
No load current I_0 damped/undamped: ≤ 10 mA/≤ 3 mA
Repeat accuracy R: max. (% v. Sr) 5%
Ambient temperature Ta: -25 to +70°C
Switching frequency f: max.1000 Hz
Degree of protection to IEC 60529: IP 67
Casing material: CuZn
Connection: plug connector
Approvals: UL

2443.14.00.60.18.044 Inductive proximity switch

Cable - straight
Cable , 90° connector

2443.14.00.60.23.01.5

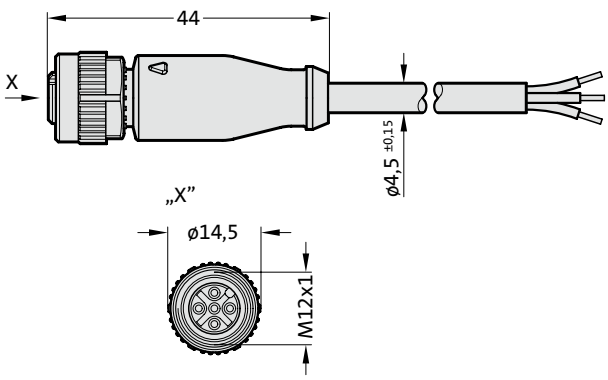



2443.14.00.60.23.01.5 Cable - straight

Technical data:
Cable type: 3 pole, M12x1
Standard length: 5m

Other lengths on request

2443.14.00.60.23.02.5

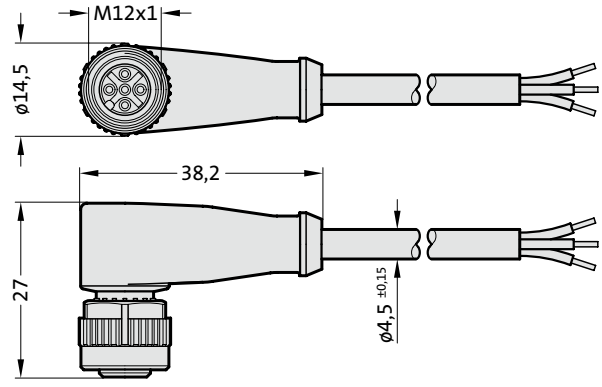



2443.14.00.60.23.02.5 Cable , 90° connector

Technical data:
Cable type: 3 pole, M12x1
Standard length: 5m

Other lengths on request

Loading Diagram for Ball Bearing Guides

Bearing Life versus Loading:

Values shown are based on the Impact Factor of $f_s = 1$
which is applicable to normal conditions in respect of die set and press,
with a maximum bearing temperature of 100 °C.

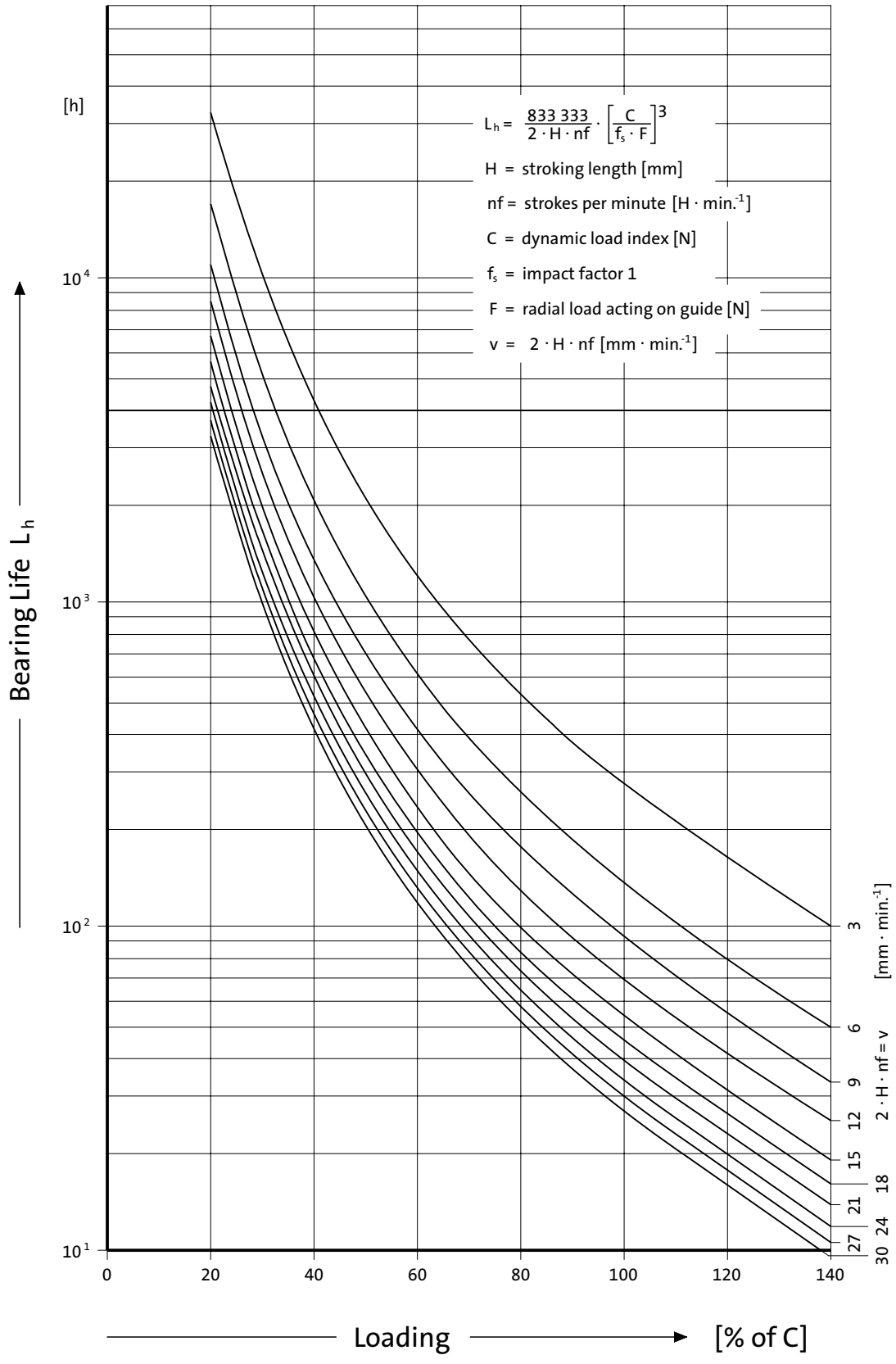

subject to alterations

Safe Loads for FIBRO Ball Bearing Guides
Tables of Dynamic Load Indexes

Definition:

The dynamic load index C constitutes a constant loading that will allow the respective sizes of ball bearing guides to reach + 105 m without any discernible bearing damage. The load index is shown in N and results from tests executed with batches of sufficient size, subjected to linear travel oscillations and radially imposed loads of constant magnitude and unchanging direction.

Pillar ∅ d_1	Cage length l_1	Dynamic Load Index C for whole cage (N)
8	40	450
10	40	1630
10	56	2210
11	40	1660
11	56	2250
12	40	1680
12	56	2280
15	45	3300
15	56	4050
15	63	4550
15	71	4950
16	24	1910
16	28	2230
16	45	3350
16	56	4100
16	63	4600
16	71	5000
19	31	3050
19	45	4050
19	56	4950
19	71	6100
19	80	6600
19	95	7600
20	24	2320
20	28	2700
20	31	3100
20	45	4100
20	56	5000
20	71	6100
20	80	6600
20	95	7600
24	31	3150
24	40	3850
24	45	4200
24	56	5100
24	71	6300
24	80	6800
24	95	7800
24	120	9300
25	31	3200
25	40	3900
25	45	4200
25	56	5200
25	71	6300
25	80	6900
25	95	7900
25	120	9300
30	40	5700
30	45	6400
30	50	7000
30	56	7600
30	71	9300
30	75	9800
30	80	10400
30	95	11900
30	105	12800
30	120	14200
30	140	16000
30	160	17700
32	40	5800
32	45	6400
32	50	7100
32	56	7700
32	71	9400
32	75	9900
32	80	10500
32	95	12000
32	105	12900
32	120	14300
32	140	16100
32	160	17800
38	45	7500

Pillar ∅ d_1	Cage length l_1	Dynamic Load Index C for whole cage (N)
38	50	8200
38	56	8900
38	63	10300
38	80	12100
38	95	13900
38	105	15000
38	120	16700
38	140	18700
38	160	20700
38	180	22600
38	200	24400
38	240	28000
40	45	7500
40	50	8200
40	56	9000
40	63	10300
40	80	12200
40	95	14000
40	105	15100
40	120	16700
40	140	18800
40	160	20800
40	180	22700
40	200	24600
40	240	28000
48	50	9400
48	63	11700
48	80	13800
48	95	15900
48	105	17100
48	120	19000
48	140	21400
48	160	23600
48	180	26000
48	200	28000
48	240	32000
50	50	9400
50	63	11700
50	80	13900
50	95	15900
50	105	17200
50	120	19100
50	140	21400
50	160	23700
50	180	26000
50	200	28000
50	240	32000
60	95	17700
60	105	19200
60	120	21300
60	140	23900
60	160	26500
60	180	29000
60	200	31000
60	240	35500
63	95	17800
63	105	19300
63	120	21300
63	140	24000
63	160	26500
63	180	29000
63	200	31500
63	240	35500
80	120	41000
80	140	46500
80	160	52000
80	180	57000
80	200	62000
80	240	70000

Assembly of Guide Elements – Dimensional Requirements and Tolerances

202.17. / 202.19. / 202.22. / 202.23. / 202.24. / 202.29.

Guide pillar-
DIN 9825/ISO 9182-2 ~DIN 9825/ ~ISO 9182-2

(press fit)

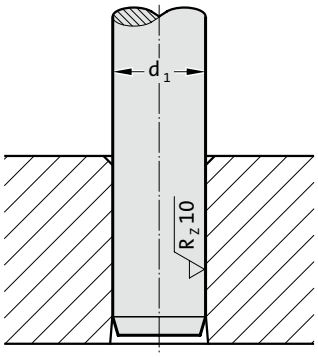

202.17. / 202.19. / 202.22. / 202.23. / 202.24. / 202.29.

Pillar ∅ d_1*	Retaining bore d_1 (recommended values based on experiences)	
3-80	in grey cast iron: d_1	–0,025 –0,035
	in steel: d_1	–0,015 –0,025

* Pillars of d_1 = 50 mm and over should be frozen in dry ice before fitting

2021.46. / 2021.44.

Demountable guide pillar with collar
DIN 9825/ ~ISO 9182-5

(transition fit)

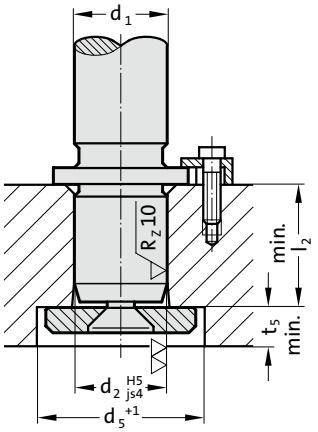

2021.46. / 2021.44.

Pillar ∅ d_1	Retaining bore d_2^{H5}	d_5^{+1}	l_2	t_5
15/16	$15/16^{+0,008}$	24	20,5	6,5
19/20	$19/20^{+0,009}$	27	23,5	6,5
24/25	$24/25^{+0,009}$	34	30,5	6,5
30/32	$30/32^{+0,011}$	42	37,5	6,5
38/40	$38/40^{+0,011}$	52	37,5	6,5
48/50	$48/50^{+0,013}$	62	47,5	6,5
60/63	$60/63^{+0,013}$	72	47,5	6,5
80	$80^{+0,013}$	95	60,5	12,5

2021.29.

Guide pillar with collar

(transition fit)

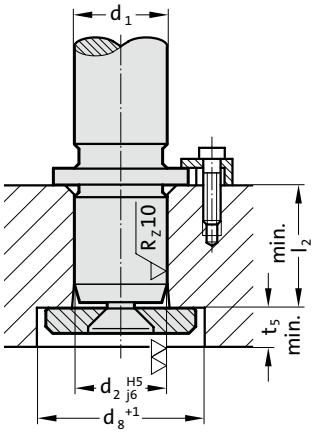

2021.29.

Pillar ∅ d_1	Retaining bore d_2^{H5}	d_8^{+1}	l_2	t_5
15/16	$15/16^{+0,008}$	24	20,5	6,5
19/20	$19/20^{+0,009}$	27	23,5	6,5
24/25	$24/25^{+0,009}$	34	30,5	6,5
30/32	$30/32^{+0,011}$	42	37,5	6,5
38/40	$38/40^{+0,011}$	52	37,5	6,5
48/50	$48/50^{+0,013}$	62	47,5	6,5
60/63	$60/63^{+0,013}$	72	47,5	6,5
80	$80^{+0,013}$	95	60,5	12,5

2021.39.

Liner bush
DIN 9825/ISO 9182-4

(transition fit)

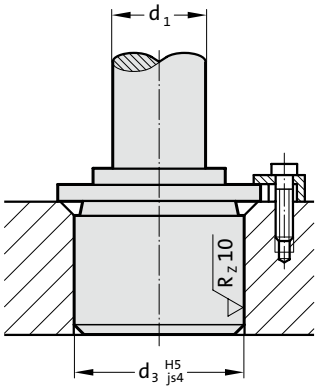

2021.39.

Pillar ∅ d_1	Retaining bore d_3^{H5}
19/20	$32^{+0,011}$
24/25	$40^{+0,011}$
30/32	$48^{+0,011}$
38/40	$58^{+0,013}$
48/50	$70^{+0,013}$
60/63	$85^{+0,015}$

Assembly of Guide Elements – Dimensional Requirements and Tolerances

210.39.

Pillar ∅ d_1	Retaining bore d_3^{H5}
16	$28^{+0,009}$
20	$32^{+0,011}$
25	$40^{+0,011}$
32	$50^{+0,011}$
40	$63^{+0,013}$
50	$80^{+0,013}$
63	$90^{+0,015}$

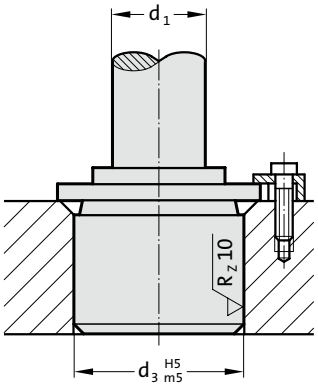

210.39.
Liner bushes, similar AFNOR
(transition fit)

202.60.

Pillar ∅ d_1	Retaining bore d_3^{H5}	Plattendicke c_3^{-1}
19	$25^{+0,009}$	33
25	$30^{+0,009}$	33
32	$36^{+0,011}$	38
40	$46^{+0,011}$	38

*Slip-Fit Bonding:

The glue-line gap must not be smaller than 0,005 mm, or the adhesive will be wiped off the contact surfaces upon fitment.
This would result in an unreliable bond.

The available component tolerances do not always result in the minimum glue-line gap.

This fact has to be born in mind when machining receiving bores, or alternatively corrections can be made on the assembly bench.

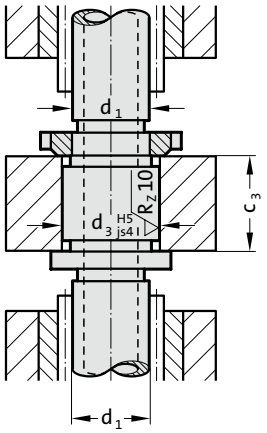

202.60.
Demountable guide pillars with centre collar
(transition fit)

2051.32.

Pillar ∅ d_1	Retaining bore d_3^{H5}
8	$13,7^{+0,008}$
11/12	$22^{+0,009}$
15/16	$28^{+0,009}$
19/20	$32^{+0,011}$
24/25	$40^{+0,011}$
30/32	$48^{+0,011}$
38/40	$58^{+0,013}$
48/50	$70^{+0,013}$
60/63	$85^{+0,015}$
80	$95,7^{+0,015}$

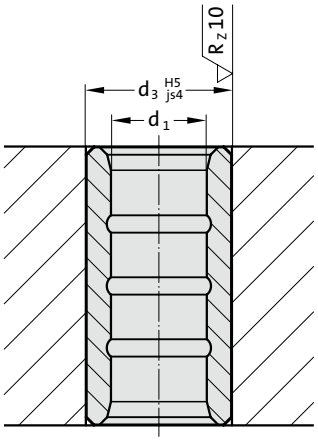

2051.32.
Sintered ferrite guide bushes DIN 9831 / ISO 9448-2
slip-fit bonding*

206.54.

Pillar ∅ d_1	Retaining bore d_3^{H6}
3	$7^{+0,009}$
4	$8^{+0,009}$
5	$10^{+0,009}$
6	$11^{+0,011}$
8	$14^{+0,011}$

2061.44. / 2061.47

Pillar ∅ d_1	Retaining bore d_3^{H5}
8	$18^{+0,008}$
10	$22^{+0,009}$
11/12	$22^{+0,009}$
15/16	$28^{+0,009}$
19/20	$32^{+0,011}$
24/25	$40^{+0,011}$
30/32	$48^{+0,011}$
38/40	$58^{+0,013}$
48/50	$70^{+0,013}$
60/63	$85^{+0,015}$
80	$105^{+0,015}$

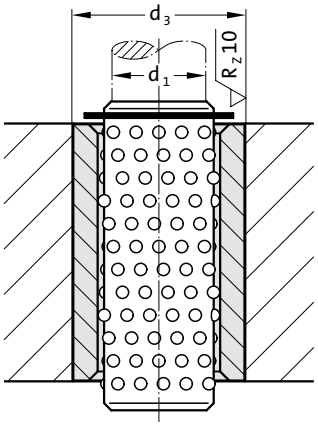

206.54.
2061.44./2061.47.
Ball bearing guide bushes DIN 9831 / ISO 9448-3
slip-fit bonding*

Assembly of Guide Elements – Dimensional Requirements and Tolerances

206.49.

Ball bearing guide bushes similar AFNOR

slip-fit bonding*

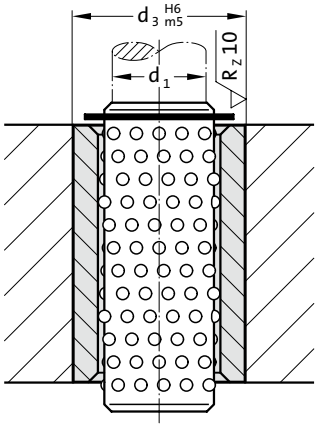

206.49.

Pillar ∅ d_1	Retaining bore d_3^{H6}
16	$28^{+0,013}$
20	$32^{+0,016}$
25	$40^{+0,016}$
32	$50^{+0,016}$
40	$63^{+0,019}$
50	$80^{+0,019}$

*Slip-Fit Bonding:

The glue-line gap must not be smaller than 0,005 mm, or the adhesive will be wiped off the contact surfaces upon fitment.
This would result in an unreliable bond.

The available component tolerances do not always result in the minimum glue-line gap.

This fact has to be born in mind when machining receiving bores, or alternatively corrections can be made on the assembly bench.

2081.3x. / 2081.4x. / 2081.8x.

Headed guide bushes, carbonitrided, bronze-coated sintered types or ball bearing types
DIN 9831 / ISO 9448-6
DIN 9831 / ISO 9448-7
ISO 9448

(transition fit)

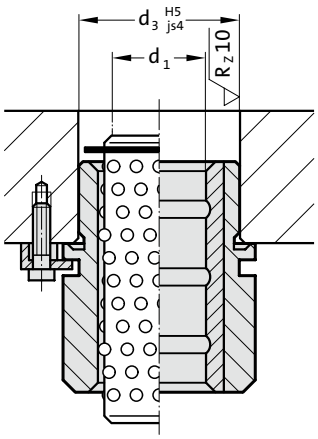

2081.3x. / 2081.4x. / 2081.8x.

Pillar ∅ d_1	Retaining bore d_3^{H5}
19/20	$32^{+0,011}$
24/25	$40^{+0,011}$
30/32	$48^{+0,011}$
38/40	$58^{+0,013}$
48/50	$70^{+0,013}$
60/63	$85^{+0,015}$
80	$105^{+0,015}$

2081.7x. / 2081.9x.

Headed guide bushes, bronze, with solid lubricant rings, bronze plated

(transition fit)

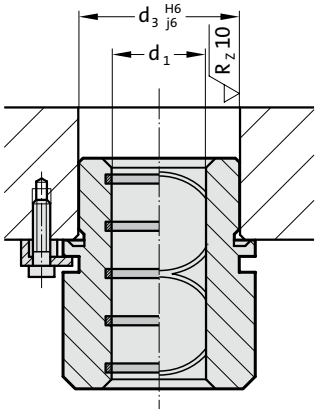

2081.7x. / 2081.9x.

Pillar ∅ d_1	Retaining bore d_3^{H6}
19/20	$32^{+0,016}$
24/25	$40^{+0,016}$
30/32	$48^{+0,016}$
38/40	$58^{+0,019}$
48/50	$70^{+0,019}$
60/63	$85^{+0,022}$
80	$105^{+0,022}$

2091.3x. / 2091.4x.

Flanged guide bushes, carbonitrided sintered types or ball bearing types
DIN 9831 / ISO 9448-4
DIN 9831 / ISO 9448-5

(transition fit)

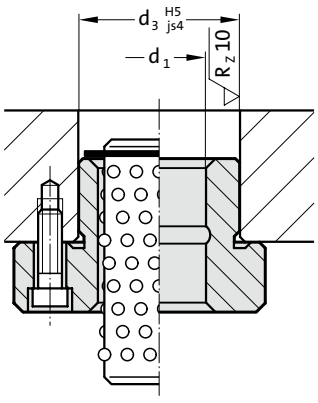

2091.3x. / 2091.4x.

Pillar ∅ d_1	Retaining bore d_3^{H5}
12	$26^{+0,009}$
15/16	$28^{+0,009}$
19/20	$32^{+0,011}$
24/25	$40^{+0,011}$
30/32	$48^{+0,011}$
38/40	$58^{+0,013}$
48/50	$70^{+0,013}$
60/63	$85^{+0,015}$
80	$105^{+0,015}$

subject to alterations

Assembly of Guide Elements – Dimensional Requirements and Tolerances

2091.7x.

Pillar ∅ d_1	Retaining bore d_3^{H6}
19/20	$32^{+0,016}$
24/25	$40^{+0,016}$
30/32	$48^{+0,016}$
38/40	$58^{+0,019}$
48/50	$70^{+0,019}$
60/63	$85^{+0,022}$
80	$105^{+0,022}$

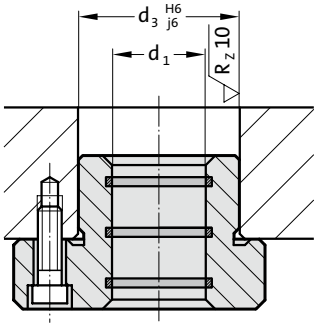

2091.7x.

Guide bush with solid lubrication rings DIN 9831 / ISO 9448-4

(transition fit)

2022.25.

Pillar ∅ d_1	Retaining bore d_1^{M6}
25	-0,004 -0,017
32	
40	-0,004 -0,020
50	
63	-0,005
80	-0,024
100	-0,006 -0,028

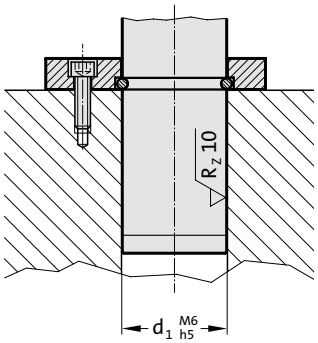

2022.25.

Guide pillar AFNOR

(transition fit)

2022.12. / 2022.15. / 2022.16. / 2022.17. / 2022.19. / 2022.29.

Pillar ∅ d_1	Retaining bore d_1^{H7}
25	+0,021 0
32	
40	+0,025 0
50	
63	+0,030
80	0
100	+0,035 0
125	+0,040
160	0

Pillars of d_1 = 50 mm and over should be frozen in dry ice before fitting

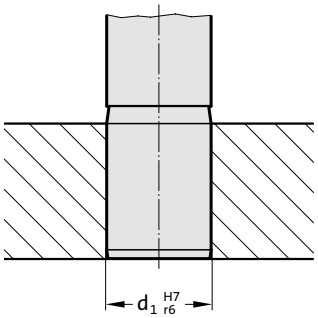

2022.12. / 2022.15. / 2022.16. / 2022.17. / 2022.19. / 2022.29.

Guide pillar DIN 9833/ISO 9182-3 Mercedes-Benz / VDI / VW / WDX

(press fit)

2022.13.

Pillar ∅ d_1	Bohrung d_1^{H6}
40	+0,016
50	0
63	+0,019
80	0

Pillars of d_1 = 50 mm and over should be frozen in dry ice before fitting

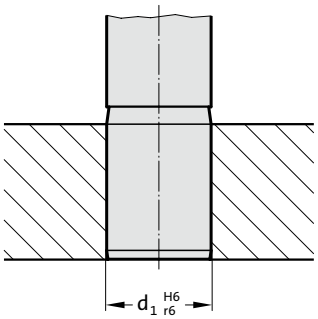

2022.13.

Guide pillar VW

(press fit)

Assembly of Guide Elements – Dimensional Requirements and Tolerances

2052.70.[1] / 2086.70. / 2085.72.

Guide Bushes/ Guide Bushes with collar, Bronze with non-liquid lubricant

slip-fit bonding*:
Retaining bore d_2 = G7

transition fit:
Retaining bore d_2 = H7

[1] if required secure with set screw

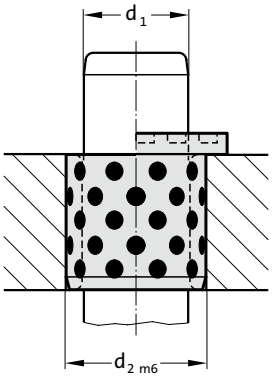

2052.70.[1] / 2086. / 2085.72.

Pillar ∅ d_1	Retaining bore d_2	bonding limits d_2^{G7}	Transition fit limits d_2^{H7}
8	12	+0,024 +0,006	+0,018 0
10	14/15		
12	18		
13	19	+0,028 +0,007	+0,021 0
14	20		
15	21		
16	22		
18/19	24/25		
20	26/28/30		
25	32/33/35	+0,034 +0,009	+0,025 0
28	38		
30	38/40/42		
31,5	40		
32	42		
35	44/45		
38	48		
40	50		
40	55	+0,040 +0,010	+0,030 0
45	55/56/60		
50	60/62/65		
55	70		
60	74/75		
63	75		
65	80		
70	85/90	+0,047 +0,012	+0,035 0
75	90/95		
80	96/100		
85	100		
90	110		
100	120		
110	130	+0,054 +0,014	+0,040 0
120	140		
125	145		
130	150		
140	160		
150	170		
160	180		

*Slip-Fit Bonding:

The glue-line gap must not be smaller than 0,005 mm, or the adhesive will be wiped off the contact surfaces upon fitment.
This would result in an unreliable bond.

The available component tolerances do not always result in the minimum glue-line gap.

This fact has to be born in mind when machining receiving bores, or alternatively corrections can be made on the assembly bench.

2085.70.

Guide Bushes with collar, Bronze with non-liquid lubricant

(transition fit)

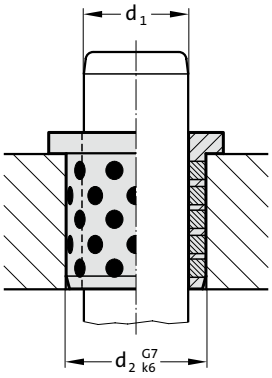

2085.70.

Pillar ∅ d_1	Retaining bore d_2^{G7}	limits d_2^{G7}
12	16	+0,024 +0,006
16	20	+0,028 +0,007
20	26	
24	30	

2085.71.

Guide Bushes with collar, Bronze with non-liquid lubricant

(press fit)

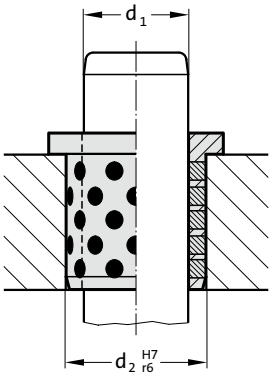

2085.71.

Pillar ∅ d_1	Retaining bore d_2	limits d_2^{H7}
10	14	+0,018 0
12	18	
13	19	+0,021 0
14	20	
15	21	
16	22	
20	30	
25	35	+0,025 0
30	40	
31,5	40	
35	45	
40	50	

Pillar ∅ d_1	Retaining bore d_2	limits d_2^{H7}
45	55	+0,030 0
50	60	
55	65	
60	75	
63	75	
70	85	+0,035 0
75	90	
80	100	
90	110	
100	120	
120	140	+0,040 0

subject to alterations

Assembly of Guide Elements – Dimensional Requirements and Tolerances

2082.70.

Pillar ∅ d_1	Retaining bore d_2^{H7}	limits d_2^{H7}
24/25	32/35	+0,025 0
30/32	40/42	
38/40	50	
48/50	63	+0,030 0
60/63	80	
80	100	+0,035 0
100	125	+0,040 0
125	160	
160	200	+0,046 0

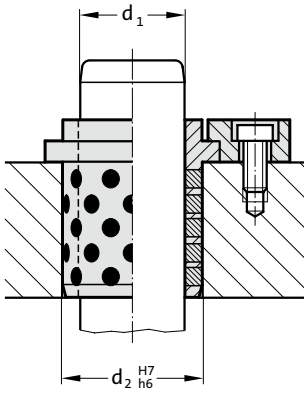

2082.70.

Guide Bushes with collar, bronze with non-liquid lubricant DIN 9834/ISO 9448

(slip fit)

2082.71. / 2086.71.

Pillar ∅ d_1	Retaining bore d_2^{H7}	limits d_2^{H7}
25/32/40	32/40/50	+0,025 0
50/63	63/80	+0,030 0
80	100	+0,035 0
100/125	125/160	+0,040 0

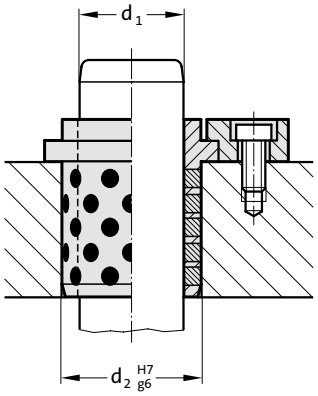

2082.71. / 2086.71.

Guide Bush with collar to NAAMS, bronze with non-liquid lubricant

(slip fit)

2102.70. / 2102.71.

Pillar ∅ d_1	Retaining bore d_2^{H6}	limits d_2^{H6}
25	35	+0,016 0
32	44	
40	52	+0,019 0
50	63	
63	80	
80	100	+0,022 0
100	125	+0,025 0

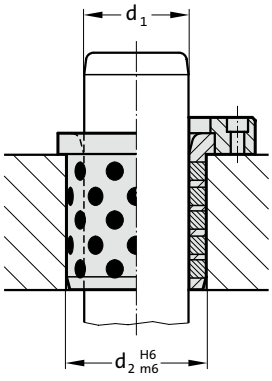

2102.70. / 2102.71.

Guide Bushes with collar, bronze with non-liquid lubricant/ bronze, CNOMO

(transition fit)

FIBRO

Assembly of Guide Elements – Dimensional Requirements and Tolerances

2087.70. / 2087.71. / 2087.73.

Guide Bushes with centre collar/ with collar, bronze with non-liquid lubricant

e7 = slip fit
f7 = slip fit
h6 = slip fit
k6 = transition fit

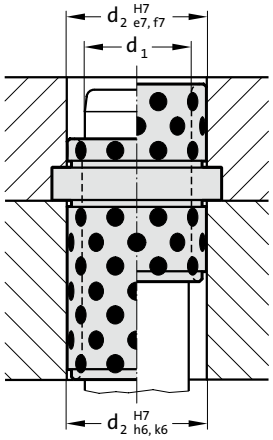

2087.70. / 2087.71. / 2087.73.

Pillar ∅ d_1	Retaining bore d_2^{H7}	limits d_2^{H7}
9/10	14	+0,018 0
14/15	20	+0,021 0
18/20	26	
22/24	30	
25	35	+0,025 0
30/32	42	
40	50	
40/42	54	+0,030 0
50	63	
60	80	
63	80	

2087.72.

Guide Bushes with collar, bronze with non-liquid lubricant

e7 = slip fit
k6 = transition fit

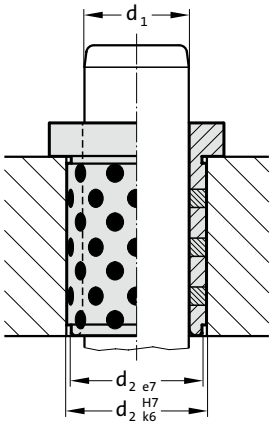

2087.72.

Pillar ∅ d_1	Retaining bore d_2^{H7}	limits d_2^{H7}
9/10	14	+0,018 0
12	18	
14/15	20	+0,021 0
16	22	
18/20	26	
22/24	30	
25	32	+0,025 0
30/32	42	
40/42	54	+0,030 0
50	66	
60	80	

3120.70. / 3120.71.

Guide Bushes, bronze with non-liquid lubricant

slip fit

bond in or if required secure with set screw or flat mushroom head screw 2192.61.

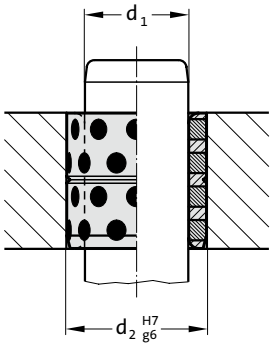

3120.70. / 3120.71.

Pillar ∅ d_1	Retaining bore d_2^{H7}	limits d_2^{H7}
8	12	+0,018 0
10	14/15	
12	18	
13	19	+0,021 0
14	20	
15	21	
16	22	
18/19	24/25	
20	26/28/30	
25	32/33/35	+0,025 0
28	38	
30	38/40/42	
31,5	40	
32	42	
35	44/45	
38	48	
40	50	
40	55	+0,030 0
45	55/56/60	
50	60/62/65	
55	70	
60	74/75	
63	75	
65	80	
70	85/90	+0,035 0
75	90/95	
80	96/100	
85	100	
90	110	
100	120	
110	130	+0,040 0
120	140	
125	145	
130	150	
140	160	
150	170	
160	180	

subject to alterations

A Die Sets

B Precision Ground Plates and Flat Bars

C Lifting and Clamping Devices

D Guide elements

E Ground Precision Components

Punches and matrixes, Pins, gauge pins

F Springs

G Elastomer-Bars, -Sheets, -Sections

H FIBRO Chemical Tooling Aids

J Peripheral Equipment

K Cam Units

L Standard Parts for Mould Making



Ground Precision Components

Ground Precision Components

FIBRO Precision Components cover a very wide range of materials, shapes and sizes and thus permit virtually unrestricted selection even to highly individual requirements.

At Hassmersheim and also abroad, stock levels of Precision Components reach seven-digit figures. It is therefore quite likely that your particular choice will be available for immediate delivery. Should this not be the case then our flexible batch production schedules will ensure that delays are kept to a minimum.

Batch production in our interpretation not only spells prompt delivery but also exceptional quality. Starting with the arrival inspection of raw materials, every single manufacturing operation on FIBRO Precision Components is followed by a quality check. Lastly, an uncompromising final inspection of each and every part guarantees that the trade mark FIBRO is and remains synonymous with Quality.

In view of the fact that a large portion of the Precision Components programme consists of punches and matrices, the importance of alignment in the operational die must be emphasized. Unless this requirement can be met to a high degree of accuracy, even the finest efforts in design and in the toolroom must fail! Die alignment ultimately depends on the guides – FIBRO Die Sets and Guide Elements were developed and are made with this postulate in mind.

Tool life, production cost and work quality are to a large extent a function of tooling material selection versus strip stock characteristics and ancillary process conditions. A judicious choice from the wide range of materials for our punches and matrices will be facilitated by the orientation guide in this catalogue. Listing the principal characteristics of each material together with selection criteria, it is intended to help customers make the right choice.

Our experienced tooling specialists will assist you with further detailed information.

In keeping with the basic tenet of our firm, every effort is made to ensure that design, performance potential and quality of FIBRO Precision Components keep well abreast with latest technological developments.

FIBRO

Contents

E15

Comparative graphs

E16-17

Precision components -
Description of materials

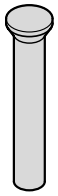

222. E18

Punch DIN 9861 Shape DA

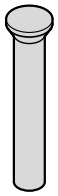

223. E19

Punch DIN 9861 Shape D / ISO 6752

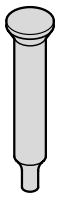

224. E20

Punch DIN 9861 Shape CA

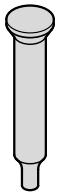

225. E21

Punch DIN 9861 Shape C

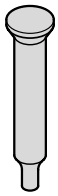

274. E22

Punch similar to DIN 9861 Shape CA

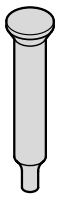

275. E23

Punch similar to DIN 9861 Shape C

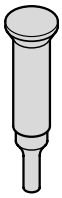

232. E24

Punch VDI 3374

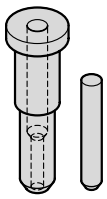

233. E25

Insert sleeve with thrust pin
VDI 3374 Shape A

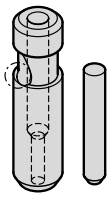

234. E26

Insert sleeve with thrust pin
VDI 3374 Shape B

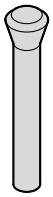

2281. E27

Punch with tapered head 30°,
Shape D

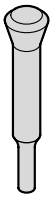

2291. E28

Punch with tapered head 30°,
Shape C

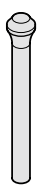

2284.3. E30

Punch with tapered head, Shape D



2284.00. E31

Piloted counterbore
for tapered-head punch

E32

Punches - Mounting guidelines

FIBRO

Contents

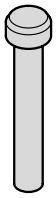

220. E33

Punch DIN 9844, Shape A

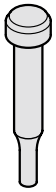

221. E34

Punch DIN 9844, Shape B

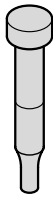

266. E35

Punch similar to VDI 3374

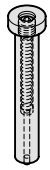

267. E36

Punch with ejector pin

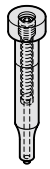

268. E37

Punch with ejector pin, stepped, short point

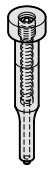

269. E38

Punch with ejector pin, stepped, long point

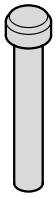

270. E41

Punch similar DIN 9844, Shape A

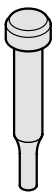

271. E42

Punch similar DIN 9844, Shape B

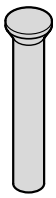

272. E43

Punch similar DIN 9861, Shape D

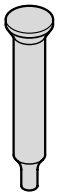

273. E44

Punch similar DIN 9861, Shape C

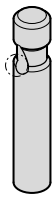

2202. E47

Ball lock punch, blank, light duty

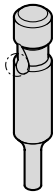

2212. E48

Ball lock punch, stepped, round, light duty

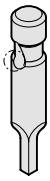

2222. E49

Ball lock punch, stepped, square, light duty

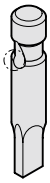

2232. E50

Ball lock punch, stepped, rectangular, light duty

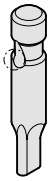

2242. E51

Ball lock punch, stepped, slot, light duty

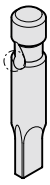

2252. E52

Ball lock punch, stepped, rectangle with radiussed corners, light duty

FIBRO

Contents

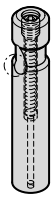

2702. E53

Ball lock punch, blank, with ejector pin, light duty

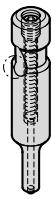

2712. E54

Ball lock punch, stepped, round, with ejector pin, light duty

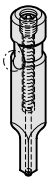

2722. E55

Ball lock punch, stepped, square, with ejector pin, light duty

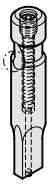

2732. E56

Ball lock punch, stepped, rectangular, with ejector pin, light duty

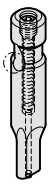

2742. E57

Ball lock punch, stepped, slot, with ejector pin, light duty

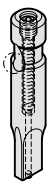

2752. E58

Ball lock punch, stepped, rectangle with radiussed corners, with ejector pin, light duty

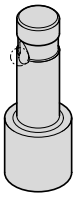

2204. E59

Ball lock punch, punch larger than shaft, blank, light duty

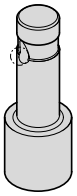

2214. E60

Ball lock punch, punch larger than shaft, round, light duty

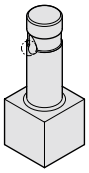

2224. E61

Ball lock punch, punch larger than shaft, square, light duty

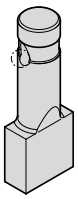

2234. E62

Ball lock punch, punch larger than shaft, rectangular, light duty

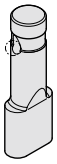

2244. E63

Ball lock punch, punch larger than shaft, slot, light duty

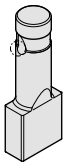

2254. E64

Ball lock punch, punch larger than shaft, rectangle with radiussed corners, light duty

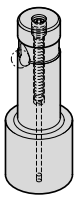

2704. E65

Ball lock punch, punch larger than shaft, blank, with ejector pin, light duty

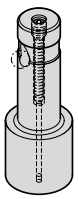

2714. E66

Ball lock punch, punch larger than shaft, round, with ejector pin, light duty

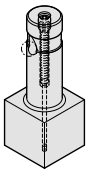

2724. E67

Ball lock punch, punch larger than shaft, square, with ejector pin, light duty

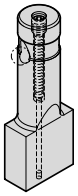

2734. E68

Ball lock punch, punch larger than shaft, rectangular, with ejector pin, light duty

Contents

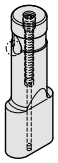

2744. E69

Ball lock punch, punch larger than shaft, slot, with ejector pin, light duty

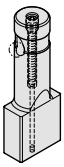

2754. E70

Ball lock punch, punch larger than shaft, rectangle with radiussed corners, with ejector pin, light duty

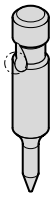

2262. E71

Ball lock pilot pin, with tapered tip, light duty

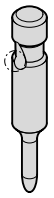

2272. E72

Ball lock pilot pin, with parabolic tip, light duty

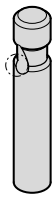

2203. E73

Ball lock punch, blank, heavy duty

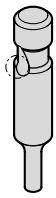

2213. E74

Ball lock punch, stepped, round, heavy duty

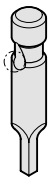

2223. E75

Ball lock punch, stepped, square, heavy duty

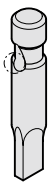

2233. E76

Ball lock punch, stepped, rectangular, heavy duty

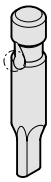

2243. E77

Ball lock punch, stepped, slot, heavy duty

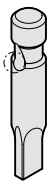

2253. E78

Ball lock punch, stepped, rectangle with radiussed corners, heavy duty

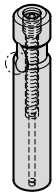

2703. E79

Ball lock punch, blank, with ejector pin, heavy duty

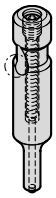

2713. E80

Ball lock punch, stepped, round, with ejector pin, heavy duty

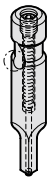

2723. E81

Ball lock punch, stepped, square, with ejector pin, heavy duty

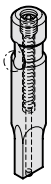

2733. E82

Ball lock punch, stepped, rectangular, with ejector pin, heavy duty

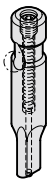

2743. E83

Ball lock punch, stepped, slot, with ejector pin, heavy duty

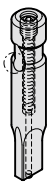

2753. E84

Ball lock punch, stepped, rectangle with radiussed corners, with ejector pin, heavy duty

FIBRO

Contents

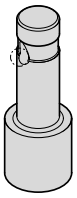

2205. E85

Ball lock punch, punch larger than shaft, blank, heavy duty

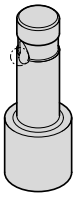

2215. E86

Ball lock punch, punch larger than shaft, round, heavy duty

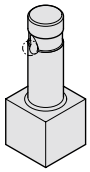

2225. E87

Ball lock punch, punch larger than shaft, square, heavy duty

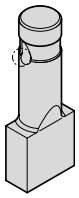

2235. E88

Ball lock punch, punch larger than shaft, rectangular, heavy duty

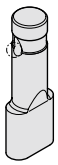

2245. E89

Ball lock punch, punch larger than shaft, slot, heavy duty

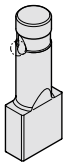

2255. E90

Ball lock punch, punch larger than shaft, rectangle with radiussed corners, heavy duty

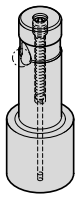

2705. E91

Ball lock punch, punch larger than shaft, blank, with ejector pin, heavy duty

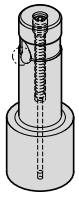

2715. E92

Ball lock punch, punch larger than shaft, round, with ejector pin, heavy duty

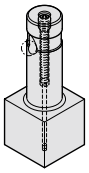

2725. E93

Ball lock punch, punch larger than shaft, square, with ejector pin, heavy duty

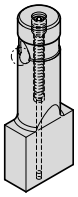

2735. E94

Ball lock punch, punch larger than shaft, rectangular, with ejector pin, heavy duty

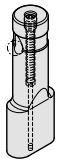

2745. E95

Ball lock punch, punch larger than shaft, slot, with ejector pin, heavy duty

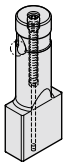

2755. E96

Ball lock punch, punch larger than shaft, rectangle with radiussed corners, with ejector pin, heavy duty

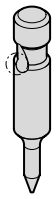

2263. E97

Ball lock pilot pin, with tapered tip, heavy duty

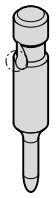

2273. E98

Ball lock pilot pin, with parabolic tip, heavy duty

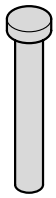

2201. E101

Punch, blank, ISO 8020

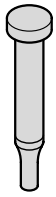

2211. E102

Punch, stepped, round, ISO 8020

Contents

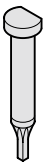

2221. E103

Punch, stepped, square, ISO 8020

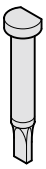

2231. E104

Punch, stepped, rectangular, ISO 8020

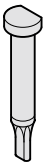

2241. E105

Punch, stepped, slot, ISO 8020

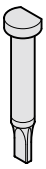

2251. E106

Punch, stepped, rectangle with radiused corners, ISO 8020

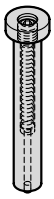

2701. E107

Punch, blank, with ejector pin, ISO 8020

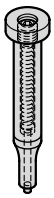

2711. E108

Punch, stepped, round, with ejector pin, ISO 8020

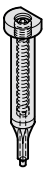

2721. E109

Punch, stepped, square, with ejector pin, ISO 8020

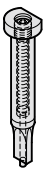

2731. E110

Punch, stepped, rectangular, with ejector pin, ISO 8020

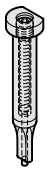

2741. E111

Punch, stepped, slot, with ejector pin, ISO 8020

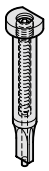

2751. E112

Punch, stepped, rectangle with radiussed corners, with ejector pin, ISO 8020

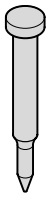

2261. E113

Pilot pin with tapered tip, ISO 8020

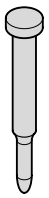

2271. E114

Pilot pin with parabolic tip, ISO 8020



2276. E115

Pilot unit to Mercedes-Benz Standard

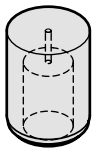

2606. E119

Matrix without shoulder, blank, ISO 8977

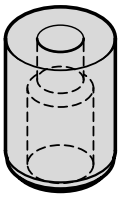

2616. E120

Matrix without shoulder, round, ISO 8977

Anti-rotation element E121-141

FIBRO

Contents

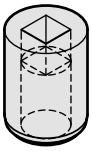

2626. E122

Matrix without shoulder, square, ISO 8977

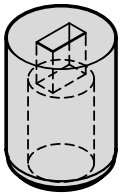

2636. E124

Matrix without shoulder, rectangular, ISO 8977

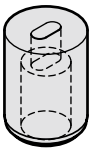

2646. E126

Matrix without shoulder, slot, ISO 8977

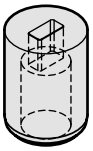

2656. E128

Matrix without shoulder, rectangle with radiussed corners, ISO 8977

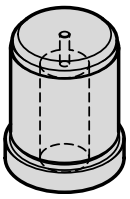

2607. E131

Matrix with shoulder, blank, ISO 8977

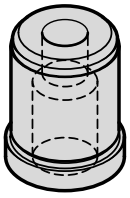

2617. E132

Matrix with shoulder, round, ISO 8977

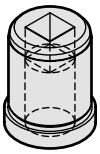

2627. E134

Matrix with shoulder, square, ISO 8977

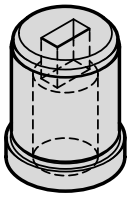

2637. E136

Matrix with shoulder, rectangular, ISO 8977

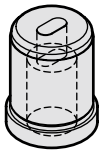

2647. E138

Matrix with shoulder, slot, ISO 8977

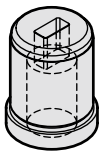

2657. E140

Matrix with shoulder, rectangle with radiussed corners, ISO 8977

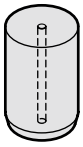

2605. E142

Matrix without shoulder, blank, Automotive Standard

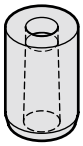

2615. E143

Matrix without shoulder, round, Automotive Standard

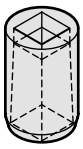

2625. E144

Matrix without shoulder, square, Automotive Standard

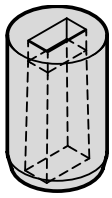

2635. E145

Matrix without shoulder, rectangular, Automotive Standard

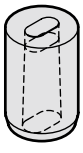

2645. E146

Matrix without shoulder, slot, Automotive Standard

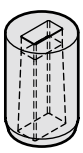

2655. E147

Matrix without shoulder, rectangle with radiused corners, Automotive Standard

Contents

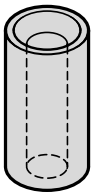

262. E148

Guide bush for punch DIN 9845, Shape C

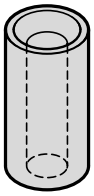

2621. E149

Guide bush for punch ISO 8978

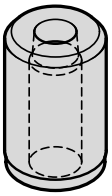

260. E150

Matrix without collar, DIN 9845 Shape A

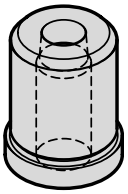

261. E151

Matrix with collar, DIN 9845 Shape B

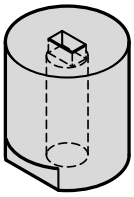

2602. E152

Matrix without collar, cylindrical

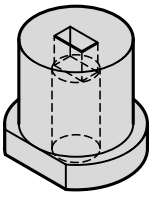

2612. E153

Matrix with collar, cylindrical

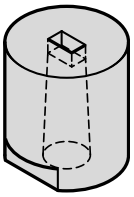

2601. E154

Matrix without collar, conical

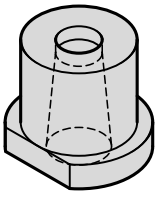

2611. E155

Matrix with collar, conical

E157-161

Standardised special shapes

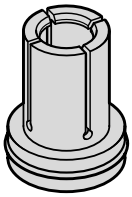

2618. E162

Dynamic stripping element (DAE)

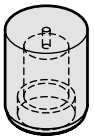

2618.06. E165

Matrix without collar for dynamic stripper (DAE), blank



2618.07. E166

Matrix with collar for dynamic stripper (DAE), blank

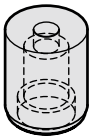

2618.16. E167

Matrix without collar for dynamic stripper (DAE), round



2618.17. E168

Matrix with collar for dynamic stripper (DAE), round

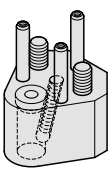

2664.05. E170

Triangle retainer for ball-lock punches, light duty

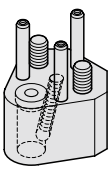

2664.06. E171

Triangle retainer for ball-lock punches, heavy duty

FIBRO

Contents

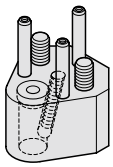

2664.07. E172

Triangle retainer for ball-lock punches, light duty

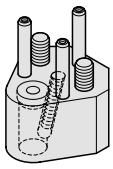

2664.10. E173

Triangle retainer for ball-lock punches, heavy duty

E174

Accessories for Retainers, triangular, for Ball-Lock Punches

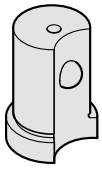

2668.2. E175

ACCU-LOCK Fixture device for ball-lock punches, light duty

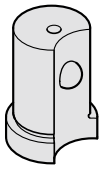

2668.3. E176

ACCU-LOCK Fixture device for ball-lock punches, heavy duty

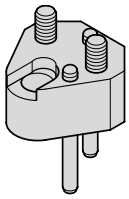

2664.02. E178

Triangle retainer, for punches ISO 8020 without anti-rotation element

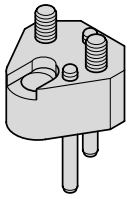

2664.04. E179

Triangle retainer, for punches ISO 8020 with anti-rotation element

E180

Accessories for retainers, triangular, for punches ISO 8020

E181

Accessories for punches

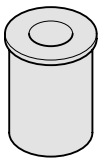

2431.7. E182

Stripping unit for punches

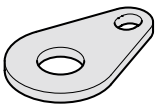

2667.1. E183

Stripping unit - Pressure plate

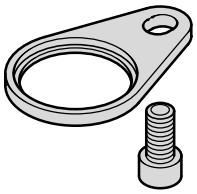

2667.2. E184

Stripping unit - Mounting plate

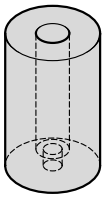

243.7. E186

Elastomer Stripper

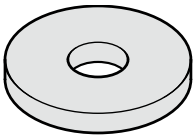

243.7. .1 E187

Stop washer

E188-189

High-Precision special parts to customer´s drawings

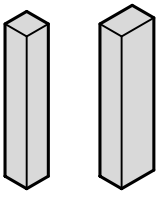

230. E190

Punch without head, square / rectangular, Shape A

Contents

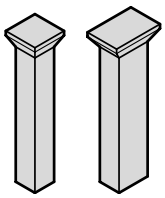

231. E191

Punch with head, square / rectangular, Shape A

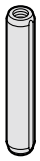

236.1. E192

Dowel pin with internal extracting thread, similar to DIN EN ISO 8735

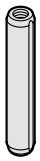

2361.1. E193

Dowel pin with internal extracting thread, similar to DIN EN ISO 8735

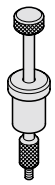

236.001. E194

FIBROZIPP

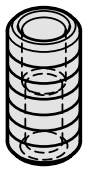

265.1. E196

Liner bush for dowel pin, for bonding

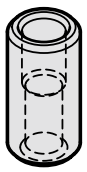

2650.1. E197

Liner bush for dowel pin, for push fit



235.1. E198

Dowel pin similar to DIN EN ISO 8734



2351.1. E199

Dowel pin similar to DIN EN ISO 8734

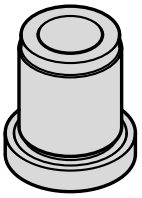

276. E200

Drill bush with collar, DIN 172, Shape A

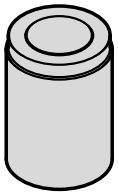

277. E201

Drill bush without collar, DIN 179, Shape A



240.1./2. E202

Gauge pin DIN 2269

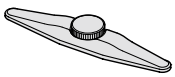

240.45. E204

Gauge pin holder

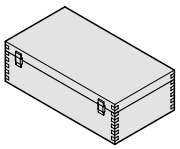

240.91. E204

Wooden box

240.92. E204

Wooden box

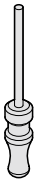

240.11. E205

Gauge pin with handle

240.22. E205

Gauge pin with handle

Contents

240.31. E205

Gauge pins - boxed set

240.32. E205

Gauge pin - boxed set

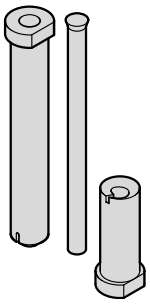

2282.01. E206

Punching and embossing unit with matrix for punched holes and self tapping screws

Comparative Graphs

Compressive Strength (0,2% Proof Stress)

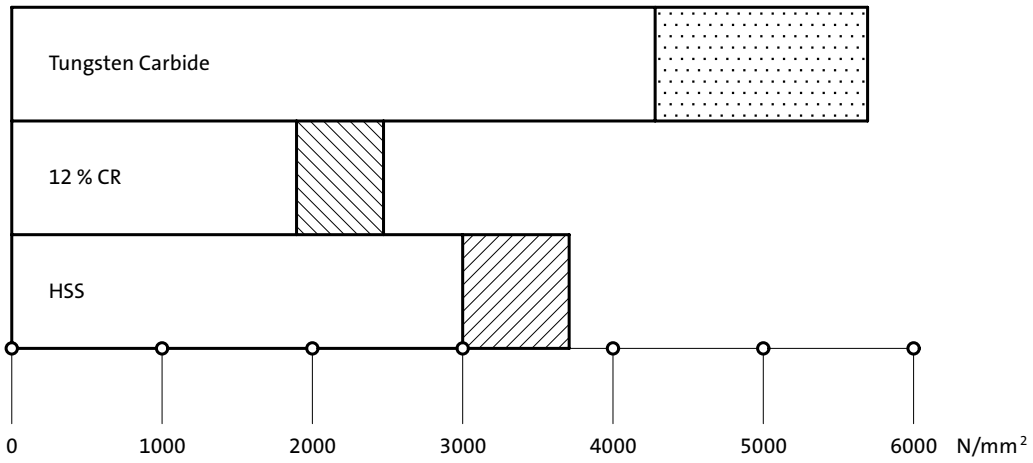

Flexural Strength

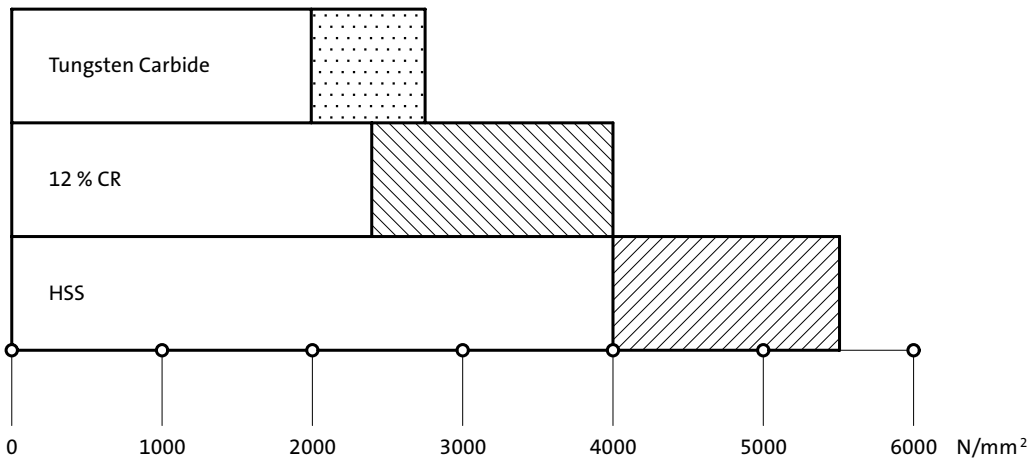

Hardness Vickers

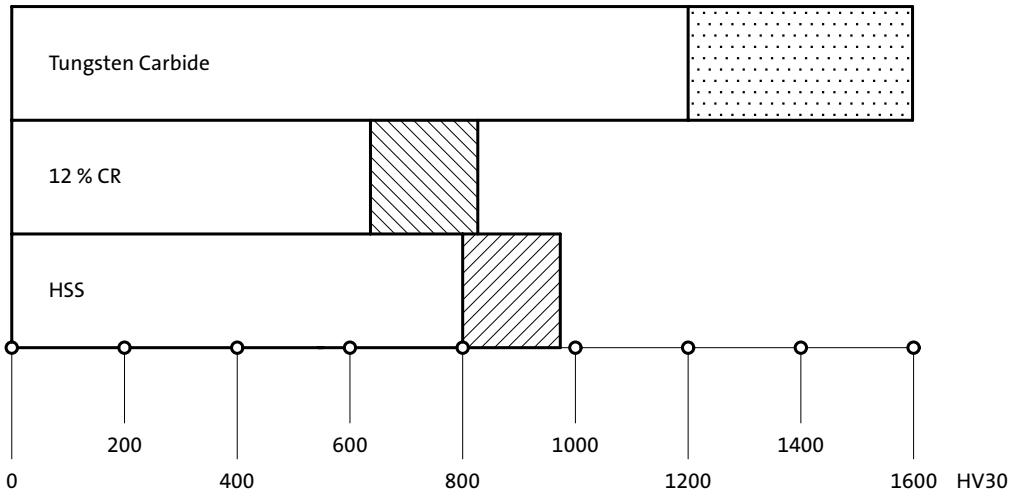

FIBRO Punches and Matrixes – Description of Materials

WS = Alloy Tool Steel

Material No 1.2210, 1.2516, 1.2842 or similar.

Characteristics: Hard and tough tool steel, medium wear resistance.

Application Field: Piercing/blanking dies for mild steel, low carbon steels, non-ferrous metals, plastics, paper.

WS = **material code number = "1"**
e.g. Order No = 239.**1**. ...

HWS = High Carbon – High Chrome Tool Steel (12% Cr)

Material No 1.2436, 1.2379 or similar.

Characteristics: High resistance to wear.

Application Field: Piercing/blanking dies of all types, trim dies, for all carbon steels, alloy steels, non-ferrous metals, plastics, paper.

HWS = **material code number = "2"**
e.g. Order No = 260.**2**. ...

HSS = High Speed Steel

Material No 1.3343 or similar.

Characteristics: High wear resistance; high tempering curve permits certain surface treatments.

Application Field: Piercing/blanking dies of all types – for tough materials e.g. spring steel, lamination steels, and abrasive papers as well as plastics.

HSS = **material code number = "3"**
e.g. Order No = 220.**3**. ...

ASP 23 / ASP 2023 = High Speed Steel on Powder-Metallurgic Basis

Characteristics: High wear resistance – greater toughness due to excellent homogenity.

Application Field: Same as HSS.

ASP 23
ASP 2023 = **material code number = "6"**
e.g. Order No = 223.**6**. ...

HST = High Speed Steel, Nitrided

Characteristics: High wear resistance – reduced galling tendency on account of nitrides infused into top layer of material.

Application Field: Piercing/blanking dies of all types – for very hard and abrasive materials.

HST = **material code number = "4"**
e.g. Order No = 223.**4**. ...

FT = Ferro-Tic (Ferro Titanit)

Characteristics: Between those of HSS and hard metals (tungsten carbides); machinable in the supplied state – hardness conferred by heat treatment.

Application Field: Fine blanking and progression/lamination dies for large quantities of parts from abrasive, hard materials, also silicon steels and stainless steels.

FT **special manufacture**
– on request –

FIBRO Punches and Matrixes – Description of Materials

HZ = Hard-coated Tooling Components for High-Performance

HZC Composite Vapour Deposition (CVD) **TIC-TIN** Coating

Carrier Materials: HSS Material No 1.3207 and 1.3343 etc.

HCHC Material No 1.2379 and 1.2436 etc.

Properties: The titanium carbide substrate provides a pressure-resistant bond with the carrier metal, while the outer layer of titanium nitride offers the well-known advantages of optimum tribologic behaviour in contact with the stamping stock. By virtue of its outstanding wear resistance, the TIN-layer largely eliminates seizing and cold welding problems in stamping.
Surface Hardness: approx. 3500 HV 0,05
Coating Thickness: 5 to 8 µm approx.

Applications: All tooling components subject to high demands on wear resistance and performance, especially punches in progression/combination tools, as well as cold extrusion punches etc.
Owing to distorsion problems, TIC-TIN is not recommanded for parts with a length/thickness ratio than 20:1.

	TIC-TIN	= **material code number = "5"**
e. g.	Order No	= 223.**5**. ...

HZN Titanium Nitride Coating **TIN**-PVD (physical vapour deposition).

Carrier Material: HSS Material No 1.3207 and 1.3343 etc.
HCHC Material No 1.2379
(HCHC-steels are of conditional suitability)

Properties: The TIN-coating offers excellent frictional characteristics but its compressive strength remains inferior to TIC-TIN deposits. The TIN-deposition process can be applied to partial, selected areas of the tooling component.
Surface Hardness: approx. 2300 HV 0,05
Coating Thickness: 2–4 µm < Ø 20 = 1,5 µm ± 20 %

Applications: Tooling for thin stamping stock such as cold rolled spring steel, zinc-galvanized sheet and strip, copper-beryllium bronze, german silver, and solenoid lamination steels.
Note that the ratio stock thickness to punch point diameter should not exceed 1:3.

	TIN	= **material code number = "0"**
e. g.	Order No	= 223.**0**. ...

HM = Tungsten Carbide

Characteristics: Hard-sintered carbide on WC-basis and of recognized properties; produced by powder-metallurgic processes, FIBRO's exclusively used HIP-densified carbide exhibits much enhanced flexural strength and reduced residual porosity.

Application Field: Die components for highest performance and very large stamping volumes – for altogether ultimate demands on tool life.

	HM	= **material code number = "9"**
e. g.	Order No	= 270.**9**. ...

NWA = Hot-Work Tool Steel – Suitable for Nitriding

Material No 1.2344 or similar.

Characteristics: Chrome-Molybdenum-Vanadium hot working die steel; core strength: > 1400 N/mm²; temperature resistant up to 650°C; surface hardness (nitrided) $\geqq 950$ HV 0,3.

Application Field: Ejector pins for pressure diecasting, injection- and compression moulding processes, and generally for work at elevated temperatures.

	NWA	= **material code number = "8"**
e. g.	Order No	= 237.**8**. ...

Punch DIN 9861 Shape DA



222.

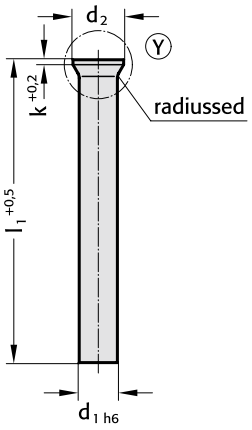

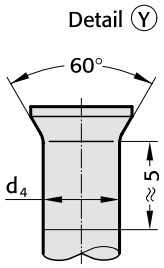

222. Punch DIN 9861 Shape DA

	Diameter steps						
d_1	d_1	d_2	k	l_1	71	80	100
0.5	0.05	0.9	0.2		●	●	●
0.55	0.05	1	0.2		●	●	●
0.6	0.05	1.1	0.2		●	●	●
0.65	0.05	1.2	0.2		●	●	●
0.7 - 0.75	0.05	1.3	0.2		●	●	●
0.8 - 0.85	0.05	1.4	0.4		●	●	●
0.9 - 0.95	0.05	1.6	0.4		●	●	●
1 - 1.1	0.1	1.8	0.5		●	●	●
1.2 - 1.3	0.1	2	0.5		●	●	●
1.4 - 1.5	0.1	2.2	0.5		●	●	●
1.6 - 1.7	0.1	2.5	0.5		●	●	●
1.8 - 1.9	0.1	2.8	0.5		●	●	●
2	0.1	3	0.5		●	●	●
2.1 - 2.2	0.1	3.2	0.5		●	●	●
2.3 - 2.5	0.1	3.5	0.5		●	●	●
2.6 - 2.9	0.1	4	0.5		●	●	●
3 - 3.4	0.1	4.5	0.5		●	●	●
3.5 - 3.9	0.1	5	0.5		●	●	●
4 - 4.4	0.1	5.5	0.5		●	●	●
4.5 - 4.9	0.1	6	0.5		●	●	●
5 - 5.4	0.1	6.5	0.5		●	●	●
5.5 - 5.9	0.1	7	0.5		●	●	●
6 - 6.4	0.1	8	0.5		●	●	●
6.5 - 7	0.5	9	1		●	●	●
7.5 - 8	0.5	10	1		●	●	●
8.5 - 9	0.5	11	1		●	●	●
9.5 - 10	0.5	12	1		●	●	●
10.5 - 11	0.5	13	1		●	●	●
11.5 - 12	0.5	14	1		●	●	●
12.5 - 13	0.5	15	1		●	●	●
13.5 - 14	0.5	16	1.5		●	●	●
14.5 - 15	0.5	17	1.5		●	●	●
15.5 - 16	0.5	18	1.5		●	●	●

Material:

HSS
Order No 222.3.
Hardness:
Shaft 64 ± 2 HRC
Head 52 ± 3 HRC

HST
Order No 222.4.
Hardness:
Surface ≥ 950 HV 0,3
Head 52 ± 3 HRC

HZ - TIN (HSS)
Order No 222.0.
Hardness:
Surface 2300 HV 0,05
Head 52 ± 3 HRC

Description of FIBRO materials for tool and die components see at the beginning of Chapter E.

Execution:

Shaft precision ground. Head hot upset-forged and tempered. Residual upset bulge below head normally much smaller than permissible acc. to DIN 9861.

d_4: For d_1 < 1 mm $d_4=d_1$ + 0,02
For d_1 ≥ 1 mm $d_4=d_1$ + 0,03

Stock lenghts: 71, 80, 100 mm.
other lengths and diameters on request!

Note:

Punches are also available without head

Ordering Code (example):

Punch DIN 9861 Shape DA		=222.	
Material MAT	HSS	= 3.	
Shaft diameter d_1	3 mm	= 0300.	
Length l_1	71 mm	= 071	
Order No		=222.3. 0300.071	

subject to alterations

Punch DIN 9861 Shape D / ISO 6752

223.

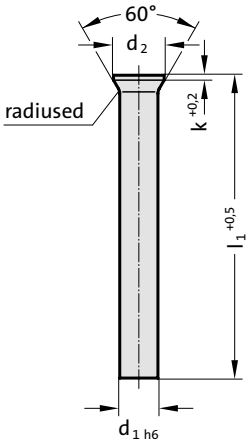



Material:

HSS
Order No 223.3.
Hardness:
Shaft 64 ± 2 HRC
Head 52 ± 3 HRC

HST
Order No 223.4.
Hardness:
Surface ≥ 950 HV 0,3
Head 52 ± 3 HRC

HZ - TIN (HSS)
Order No 223.0.
Hardness:
Surface 2300 HV 0,05
Head 52 ± 3 HRC

ASP 23 - ASP 2023
Order No 223.6.
Hardness:
Shaft 64 ± 2 HRC
Head 52 ± 3 HRC

Description of FIBRO materials for tool and die components see at the beginning of Chapter E.

Execution:

Head hot upset-forged and tempered. Shaft and head subsequently precision plunge-ground for perfect concentricity and full interchangeability with replacement punches.

Stock lenghts: 71, 80, 100 mm.
other lengths and diameters on request!

223. Punch DIN 9861 Shape D / ISO 6752

	Diameter steps						
d_1	d_1	d_2	k	l_1	71	80	100
0.5	0.05	0.9	0.2		●	●	●
0.55	0.05	1	0.2		●	●	●
0.6	0.05	1.1	0.2		●	●	●
0.65	0.05	1.2	0.2		●	●	●
0.7 - 0.75	0.05	1.3	0.2		●	●	●
0.8 - 0.85	0.05	1.4	0.4		●	●	●
0.9 - 0.95	0.05	1.6	0.4		●	●	●
1 - 1.1	0.1	1.8	0.5		●	●	●
1.2 - 1.3	0.1	2	0.5		●	●	●
1.4 - 1.5	0.1	2.2	0.5		●	●	●
1.6 - 1.7	0.1	2.5	0.5		●	●	●
1.8 - 1.9	0.1	2.8	0.5		●	●	●
2	0.1	3	0.5		●	●	●
2.1 - 2.2	0.1	3.2	0.5		●	●	●
2.3 - 2.5	0.1	3.5	0.5		●	●	●
2.6 - 2.9	0.1	4	0.5		●	●	●
3 - 3.4	0.1	4.5	0.5		●	●	●
3.5 - 3.9	0.1	5	0.5		●	●	●
4 - 4.4	0.1	5.5	0.5		●	●	●
4.5 - 4.9	0.1	6	0.5		●	●	●
5 - 5.4	0.1	6.5	0.5		●	●	●
5.5 - 5.9	0.1	7	0.5		●	●	●
6 - 6.4	0.1	8	0.5		●	●	●
6.5 - 7	0.5	9	1		●	●	●
7.5 - 8	0.5	10	1		●	●	●
8.5 - 9	0.5	11	1		●	●	●
9.5 - 10	0.5	12	1		●	●	●
10.5 - 11	0.5	13	1		●	●	●
11.5 - 12	0.5	14	1		●	●	●
12.5 - 13	0.5	15	1		●	●	●
13.5 - 14	0.5	16	1.5		●	●	●
14.5 - 15	0.5	17	1.5		●	●	●
15.5 - 16	0.5	18	1.5		●	●	●
16.5 - 17	0.5	19	1.5		●	●	●
17.5 - 18	0.5	20	1.5		●	●	●
18.5 - 19	0.5	21	1.5		●	●	●
19.5 - 20	0.5	22	1.5		●	●	●

Ordering Code (example):

Punch DIN 9861 Shape D / ISO 6752		=	223.
Material MAT	HSS	=	3.
Shaft diameter d_1	4 mm	=	0400.
Length l_1	71 mm	=	071
Order No		=	223.3. 0400. 071

Punch DIN 9861 Shape CA



224.

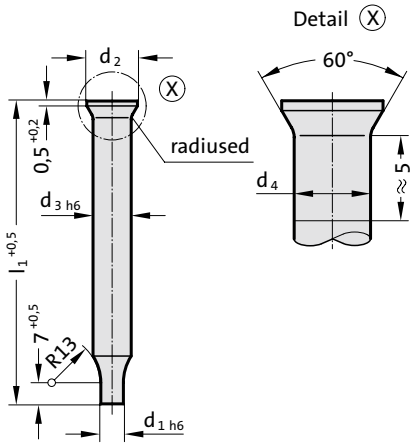

224. Punch DIN 9861 Shape CA

Diameter steps					
d_1	d_1	d_2	d_3	d_4	l_1
0.1 - 1.5	0.05	3	2	2.03	71
1.55 - 2.95	0.05	4.5	3	3.03	71

Material:

HSS
Order No 224.3.
Hardness:
Shaft 64 ± 2 HRC
Head 52 ± 3 HRC

HZ - TIN (HSS)
Order No 224.0.
Hardnes:
Surface 2300 HV 0,05
Head 52 ± 3 HRC

Description of FIBRO materials for tool and die components see at the beginning of Chapter E.

Execution:

Shaft precision ground. Head subsequently hot upset-forged and tempered; residual upset-buge below head normally much smaller than permissible acc. to DIN 9861.

Stock lenghts: 71 mm.
Other lengths and diameters on request!

Ordering Code (example):

Punch DIN 9861 Shape CA		=224.	
Material MAT	HSS	=	3.
Cutting diameter d_1	1.55 mm	=	0155.
Length l_1	71 mm	=	071
Order No		=224.3.	0155.071

subject to alterations

Punch DIN 9861 Shape C

225.

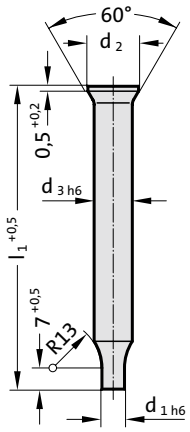



Material:

HSS
Order No 225.3.
Hardness:
Shaft 64 ± 2 HRC
Head 52 ± 3 HRC

HST
Order No 225.4.
Hardness:
Surface ≥ 950 HV 0,3
Head 52 ± 3 HRC

HZ - TIN (HSS)
Order No 225.0.
Hardness:
Surface 2300 HV 0,05
Head 52 ± 3 HRC

ASP 23 - ASP 2023
Order No 225.6.
Hardness:
Shaft 64 ± 2 HRC
Head 52 ± 3 HRC

Description of FIBRO materials for tool and die components see at the beginning of Chapter E.

Execution:

Head hot upset-forged and tempered. Shaft and head subsequently precision plunge-ground for perfect concentricity and full interchangeability with replacement punches.

Stock lenghts: 71 mm.
other lengths and diameters on request!

225. Punch DIN 9861 Shape C

	Diameter steps			
d_1	d_1	d_2	d_3	l_1
0.1 - 1.5	0.05	3	2	71
1.55 - 2.95	0.05	4.5	3	71

Ordering Code (example):

Punch DIN 9861 Shape C		=	225.
Material MAT	HSS	=	3.
Cutting diameter d_1	1.55 mm	=	0155.
Length l_1	71 mm	=	071
Order No		=	225.3. 0155. 071

Punch similar to DIN 9861 Shape CA



274.

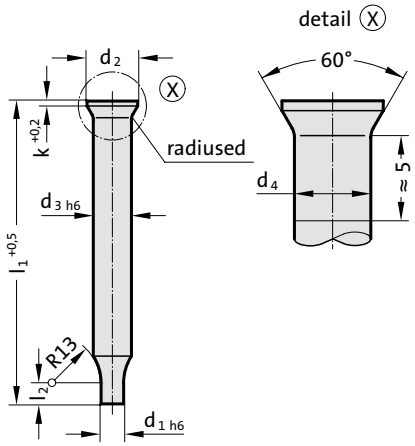

274. Punch similar to DIN 9861 Shape CA

	Diameter steps								
d_1	d_1	d_2	d_3	d_4	l_2	k	l_1	71	80	100
1 - 3.9	0.05	5.5	4	4.03	5 - 20	0.5		●	●	●
1.5 - 4.9	0.05	6.5	5	5.03	5 - 20	0.5		●	●	●
1.6 - 5.9	0.05	8	6	6.03	5 - 20	0.5		●	●	●
2.5 - 7.9	0.05	10	8	8.03	5 - 20	1		●	●	●
4 - 9.9	0.05	12	10	10.03	5 - 20	1		●	●	●
5 - 12.9	0.05	15	13	13.03	5 - 20	1		●	●	●
8 - 15.9	0.05	18	16	16.03	5 - 20	1.5		●	●	●

Description:

DIN 9861 restricts the range of stepped punches with conical head to shanks of 3 mm max. diameter and points of 2,95 mm max. diameter. Stepped punches of larger size are, however, quite popular owing to their rigidity and ability to sustain considerable stripping forces. In accommodation of this demand we supply larger sizes whichare ground from stock sizes of the 222.-series.
Please select from those ranges and complete your order in accordance with the example on the right.

Material:

HSS
Order No 274.3.
Hardness:
Shaft 64 ± 2 HRC
Head 52 ± 3 HRC

HST
Order No 274.4.
Hardness:
Surface ≥ 950 HV 0,3
Head 52 ± 3 HRC

HZ - TIN (HSS)
Order No 274.0.
Hardness:
Surface 2300 HV 0,05
Head 52 ± 3 HRC

Description of FIBRO materials for tool and die components see at the beginning of Chapter E.

Execution:

Shaft precision ground. Head subsequently hot upset-forged and tempered; residual upset-buge below head normally much smaller than permissible acc. to DIN 9861.
Stock lenghts: 71, 80, 100 mm.
other lengths and diameters on request!

Ordering Code (example):

Punch similar to DIN 9861 Shape CA		=	274.
Material MAT	HSS	=	3.
Shaft diameter d_3	8 mm	=	0800.
Length l_1	71 mm	=	071.
Cutting diameter d_1	2.5 mm	=	0250.
Punch cutting length l_2	5 mm	=	005
Order No		=	274.3. 0800. 071. 0250. 005

subject to alterations

Punch similar to DIN 9861 Shape C

275.

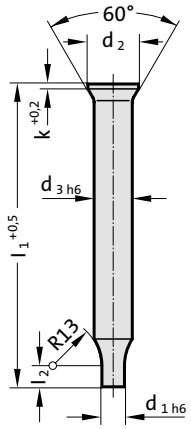



Description:

DIN 9861 restricts the range of stepped punches with conical head to shanks of 3 mm max. diameter and points of 2,95 mm max. diameter. Stepped punches of larger size are, however, quite popular owing to their rigidity and ability to sustain considerable stripping forces. In accommodation of this demand we supply larger sizes whichare ground from stock sizes of the 223.-series
Please select from those ranges and complete your order in accordance with the example on the right.

Material:

HSS
Order No 275.3.
Hardness: Shaft 64 ± 2 HRC; Head 52 ± 3 HRC

HST
Order No 275.4.
Hardness: Surface ≥ 950 HV 0,3; Head 52 ± 3 HRC

HZ - TIN (HSS)
Order No 275.0.
Hardness: Surface 2300 HV 0,05; Head 52 ± 3 HRC

ASP 23-ASP2023
Order No 275.6.
Hardness: Shaft 64 ± 2 HRC; Head 52 ± 3 HRC

Description of FIBRO materials for tool and die components see at the beginning of Chapter E.

Execution:

Head hot upset-forged and tempered. Shaft and head subsequently precision plunge-ground for perfect concentricity and full interchangeability with replacement punches.
Stock lenghts: 71, 80, 100 mm.
other lengths and diameters on request!

275. Punch similar to DIN 9861 Shape C

	Diameter steps								
d_1	d_1	d_2	d_3	l_2	k	l_1	71	80	100
1 - 3.9	0.05	5.5	4	5 - 20	0.5		●	●	●
1.5 - 4.9	0.05	6.5	5	5 - 20	0.5		●	●	●
1.6 - 5.9	0.05	8	6	5 - 20	0.5		●	●	●
2.5 - 7.9	0.05	10	8	5 - 20	1		●	●	●
4 - 9.9	0.05	12	10	5 - 20	1		●	●	●
5 - 12.9	0.05	15	13	5 - 20	1		●	●	●
8 - 15.9	0.05	18	16	5 - 20	1.5		●	●	●

Ordering Code (example):

Punch similar to DIN 9861 Shape C		=275.	
Material MAT	HSS	=	3.
Shaft diameter d_3	8 mm	=	0800.
Length l_1	71 mm	=	071.
Cutting diameter d_1	2.5 mm	=	0250.
Punch cutting length l_2	5 mm	=	005
Order No		=275.3.	0800.071.0250.005

Punch VDI 3374



232.

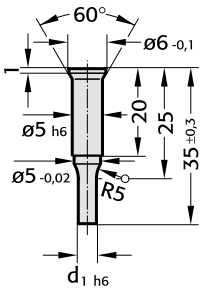

232. Punch VDI 3374

	Diameter steps
d_1	d_1
2 - 5	0.1

Material:

HSS
Order No 232.3.
Hardness:
Shaft 64 ± 2 HRC
Head 52 ± 3 HRC

Description of FIBRO materials for tool and die components see at the beginning of Chapter E.

Execution:

Head hot upset-forged. Shaft and head subsequently precision plunge-ground.

Note:

Matching insert sleeve 233. und 234.

Ordering Code (example):

Punch VDI 3374		=232.	
Material MAT	HSS	=	3.
Cutting diameter d_1	2 mm	=	0200
Order No		=232.3.	0200

subject to alterations

Insert sleeve with thrust pin VDI 3374 Shape A

233.

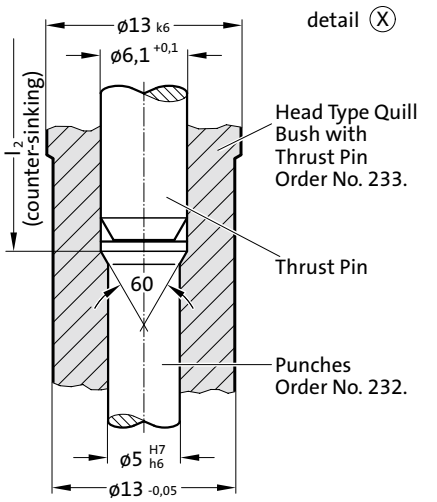

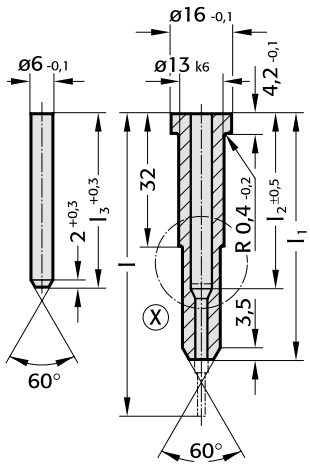



Material:
Insert sleeve:
Steel C 45 heat treated to 800 N/mm²

Thrust pin:
HWS, hardened 62 ± 2 HRC

Execution:
Insert sleeve: shaft precision ground
Thrust pin: ground

Note:
Matching punch 232.

233. Insert sleeve with thrust pin VDI 3374 Shape A

Order No	l	l_1	l_2	l_3
233.7.048	63	48	29	29
233.7.057	71	57	37	37
233.7.065	80	65	46	46

Insert sleeve with thrust pin VDI 3374 Shape B



234.

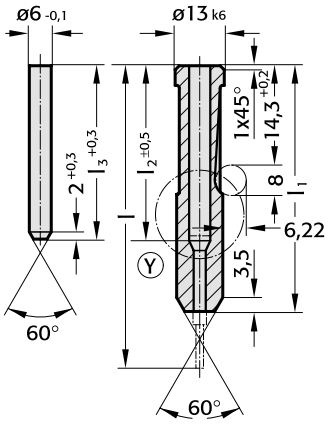

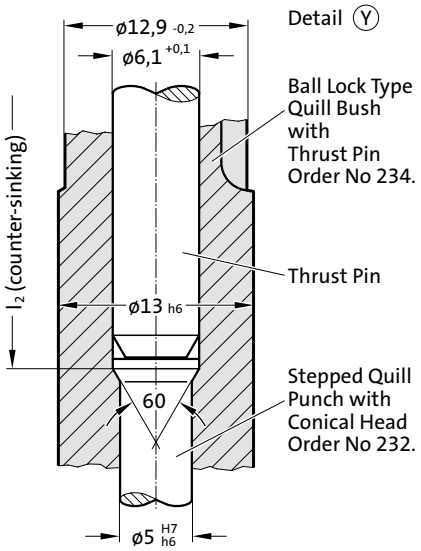

234. Insert sleeve with thrust pin VDI 3374 Shape B

Order No	l	l_1	l_2	l_3
234.7.048	63	48	29	29
234.7.057	71	57	37	37
234.7.065	80	65	46	46

Material:

Insert sleeve:
Steel C 45 heat treated to 800 N/mm²

Thrust pin:
HWS, hardened 62 ± 2 HRC

Execution:

Insert sleeve: shaft precision ground
Thrust pin: ground

Note:

Matching punch 232.

subject to alterations

Punch with tapered head 30°, Shape D

2281.

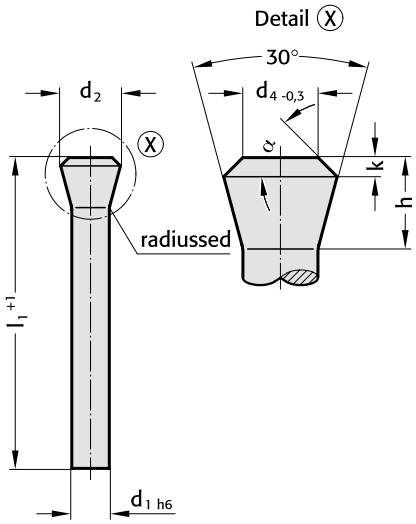



Material:

HSS
Order No 2281.3.
Hardness:
Shaft 58 + 2 HRC
Head ≤ 50 HRC

Description of FIBRO materials for tool and die components see at the beginning of Chapter E.

Execution:

Head hot upset-forged and tempered. Shaft and head subsequently precision plunge-ground for perfect concentricity and full interchangeability with replacement punches.

2281. Punch with tapered head 30°, Shape D

d_1	d_2	d_4	h	k	α ± 1°	l_1	l_1
						100	120
5.5	8.98	5.5	7.5	1	30	●	●
6	9.75	6	8	1	28	●	●
8	12.8	8	10	1	22.5	●	●
9	14.4	9	11	1	20	●	●
10	15.9	10	12	1	19	●	●
12	18.7	12	14	1.5	24		●
14	21.8	14	16	1.5	21		●
16	24.6	16	18	2	25		●

Ordering Code (example):

Punch with tapered head 30°, Shape D		=2281.	
Material MAT	HSS	=	3.
Shaft diameter d_1	10 mm	=	1000.
Length l_1	100 mm	=	100
Order No		=2281.	3. 1000. 100

Punch with tapered head 30°, Shape C



2291.

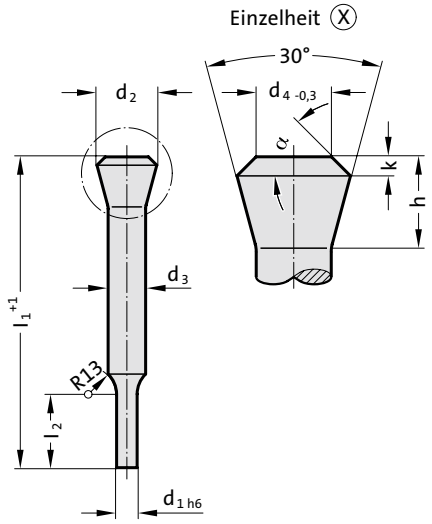

2291. Punch with tapered head 30°, Shape C

d_3	d_2	d_4	h	k	α ±1°	l_1	l_1
						100	120
5.5	8.98	5.5	7.5	1	30	●	●
6	9.75	6	8	1	28	●	●
8	12.8	8	10	1	22.5	●	●
9	14.4	9	11	1	20	●	●
10	15.9	10	12	1	19	●	●
12	18.7	12	14	1.5	24		●
14	21.8	14	16	1.5	21		●
16	24.6	16	18	2	25		●

Material:

HSS
Order No 2291.3.
Hardness:
Shaft 58 + 2 HRC
Head ≤ 50 HRC

Description of FIBRO materials for tool and die components see at the beginning of Chapter E.

Execution:

Head hot upset-forged and tempered. Shaft and head subsequently precision plunge-ground for perfect concentricity and full interchangeability with replacement punches.

d_1 and l_2 to customer's specifications!

Ordering Code (example):

Punch with tapered head 30°, Shape C		=2291.	
Material MAT	HSS	=	3.
Shaft diameter d_3	10 mm	=	1000.
Length l_1	100 mm	=	100.
Cutting diameter d_1	5 mm	=	0500.
Punch cutting length l_2	5 mm	=	005
Order No		=2291. 3. 1000. 100. 0500. 005	

subject to alterations

Punch with tapered head, Shape D



2284.3.

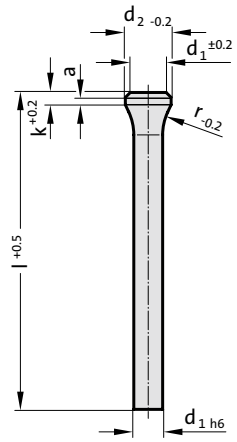

Material:

HSS
Order No 2284.3.
Hardness:
Shaft 62-66 HRC
Head 45-55 HRC

Description of FIBRO materials for tool and die components see at the beginning of Chapter E.

Execution:

Shaft precision ground. Head subsequently hot upset-forged and tempered.

Note:

Matching piloted counterbore 2284.00.

Ordering Code (example):

Punch with tapered head, Shape D		=2284.3.		
Shaft diameter d_1	5.2 mm	=	0520.	
Length l	80 mm	=		080
Order No		=2284.3.	0520.	080

2284.3. Punch with tapered head, Shape D

d_1	d_2	a	k	r	l	71	80	100	110
2	3	1	3	3.5		●	●	●	
2.1	3.2	1	3	5		●	●	●	
2.2	3.2	1	3	5		●	●	●	
2.3	3.5	1	3	5		●	●	●	
2.4	3.5	1	3	5		●	●	●	
2.5	3.5	1	3	5		●	●	●	
2.6	4	1	3	6.5		●	●	●	
2.7	4	1	3	6.5		●	●	●	
2.8	4	1	3	6.5		●	●	●	
2.9	4	1	3	6.5		●	●	●	
3.1	4.5	1	3	6.5		●	●	●	
3.2	4.5	1	3	6.5		●	●	●	
3.3	4.5	1	3	6.5		●	●	●	
3.4	4.5	1	3	6.5		●	●	●	
3.5	5	1	3	8		●	●	●	
3.6	5	1	3	8		●	●	●	
3.7	5	1	3	8		●	●	●	
3.8	5	1	3	8		●	●	●	
4.1	5.5	1.5	4	8		●	●	●	
4.2	5.5	1.5	4	8		●	●	●	
4.3	5.5	1.5	4	8		●	●	●	
4.4	5.5	1.5	4	8		●	●	●	
4.5	6	1.5	4	8		●	●	●	
4.6	6	1.5	4	8		●	●	●	
4.7	6	1.5	4	8		●	●	●	
4.8	6	1.5	4	8		●	●	●	
4.9	6	1.5	4	8		●	●	●	
5.1	7	1.5	4	10		●		●	
5.2	7	1.5	4	10			●	●	
5.5	8	1.5	4	10		●	●	●	
5.6	8	1.5	4	10				●	
6.1	9	1.5	4	10				●	
6.2	9	1.5	4	10				●	
6.3	9	1.5	4	10		●		●	
6.4	9	1.5	4	10		●		●	
6.5	10	1.5	4	12		●		●	●
7	10	1.5	4	12		●	●	●	
7.5	11	1.5	4	12		●	●	●	
7.7	11	1.5	4	12				●	
8.1	11	1.5	4	12		●		●	
8.5	13	1.5	4	15		●	●	●	
9	13	1.5	4	15		●	●	●	●
9.5	14	1.5	4	15		●		●	
10.5	15	1.5	4	15				●	
11	15	1.5	4	15				●	
11.5	16	1.5	4	15				●	
12	16	1.5	4	15				●	●
12.5	17	1.5	4	15				●	
13.5	18	1.5	4	15				●	
14	18	1.5	4	15				●	●
14.5	19	1.5	4	15				●	
15	19	1.5	4	15				●	●
15.5	20	1.5	4	15				●	
17	21	1.5	4	15		●		●	●
18	22	1.5	4	15				●	●
19	23	1.5	4	15				●	
19.5	25	1.5	4	15				●	

subject to alterations

Piloted counterbore for tapered-head punch

2284.00. Piloted counterbore for tapered-head punch

d_1	d_s	d_3	r_1	l_1
2	3.3	3.3	3.5	5
2.1	3.5	3.5	5	5
2.2	3.5	3.5	5	5
2.3	3.8	3.8	5	5
2.4	3.8	3.8	5	5
2.5	3.8	3.8	5	5
2.6	4.3	4.3	6.5	7
2.7	4.3	4.3	6.5	7
2.8	4.3	4.3	6.5	7
2.9	4.3	4.3	6.5	7
3	4.9	4.9	6.5	7
3.1	4.9	4.9	6.5	7
3.2	4.9	4.9	6.5	7
3.3	4.9	4.9	6.5	7
3.4	4.9	4.9	6.5	7
3.5	5.4	5.4	8	8
3.6	5.4	5.4	8	8
3.7	5.4	5.4	8	8
3.8	5.4	5.4	8	8
4	5.9	5.9	8	8
4.1	5.9	5.9	8	8
4.2	5.9	5.9	8	8
4.3	5.9	5.9	8	8
4.4	5.9	5.9	8	8
4.5	6.4	6.4	8	8
4.6	6.4	6.4	8	8
4.7	6.4	6.4	8	8
4.8	6.4	6.4	8	8
4.9	6.4	6.4	8	8
5	7.4	7.4	10	10
5.1	7.4	7.4	10	10
5.2	7.4	7.4	10	10
5.5	8.5	8.5	10	10
5.6	8.5	8.5	10	10
6	9.5	9.5	10	10
6.1	9.5	9.5	10	10
6.2	9.5	9.5	10	10
6.3	9.5	9.5	10	10
6.4	9.5	9.5	10	10
6.5	10.5	10.5	12	12
7	10.5	10.5	12	12
7.5	11.5	11.5	12	12
7.7	11.5	11.5	12	12
8	11.5	11.5	12	12
8.1	11.5	11.5	12	12
8.5	13.5	13	15	12
9	13.5	13	15	12
9.5	14.5	13	15	12
10	14.5	13	15	12
10.5	15.5	13	15	15
11	15.5	13	15	15
11.5	16.5	13	15	15
12	16.5	13	15	15
12.5	17.5	13	15	15
13	17.5	13	15	15
13.5	18.5	13	15	15
14	18.5	13	15	15
14.5	19.5	13	15	15
15	19.5	13	15	15
15.5	20.5	13	15	15
16	20.5	13	15	15
17	21.5	16	15	15
18	22.5	16	15	15
19	23.5	16	15	15
19.5	25.5	16	15	15
20	25.5	16	15	15



2284.00.

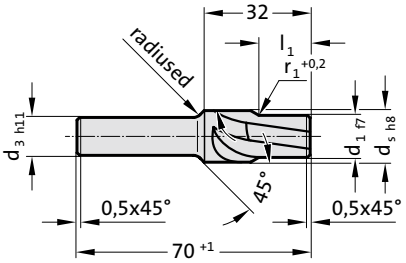

Material:
HSS, hardened 62-66 HRC

Execution:
Tempered and ground.

Ordering Code (example):

Piloted counterbore for tapered-head punch		=2284.00.
Shaft diameter d_1	5.6 mm =	0560
Order No		=2284.00. 0560

FIBRO

Assembly Guide Lines for Head Type Punches with Round Points

Description:

Head type punches with round point (DIN 9844) are intended for floating assembly in the punch retainer. Radial guiding is to be provided by the stripper.

This type of punch assembly eliminates alignment errors caused by distorted mounting of the die set and faulty press geometry.

With punches held in this manner, a clear separation between transmission of perforation force and guiding is achieved.

In order to facilitate assembly of punches of different diameters, the height of the heads is standardized to $4_{+0,2}$ mm (DIN 9844).

Guide Lines:

(excerpts from DIN 9844, page 5)

d_1 max. = stock thickness

stripping force*, for d_1 from 1 to 5 mm: approx. 20 % of piercing force
ditto . . ., for d_1 from 5 to 16 mm: approx. 10 % of piercing force

*applicable to stock not exceeding 400 N/mm² shear strength

Punch retainer: steel of at least 300 N/mm² tensile strength

Retaining hole in punch retainer = 1,05 times d_1 or d_2 respectively

Clearance punch head/percussion plate = 0,02 mm.

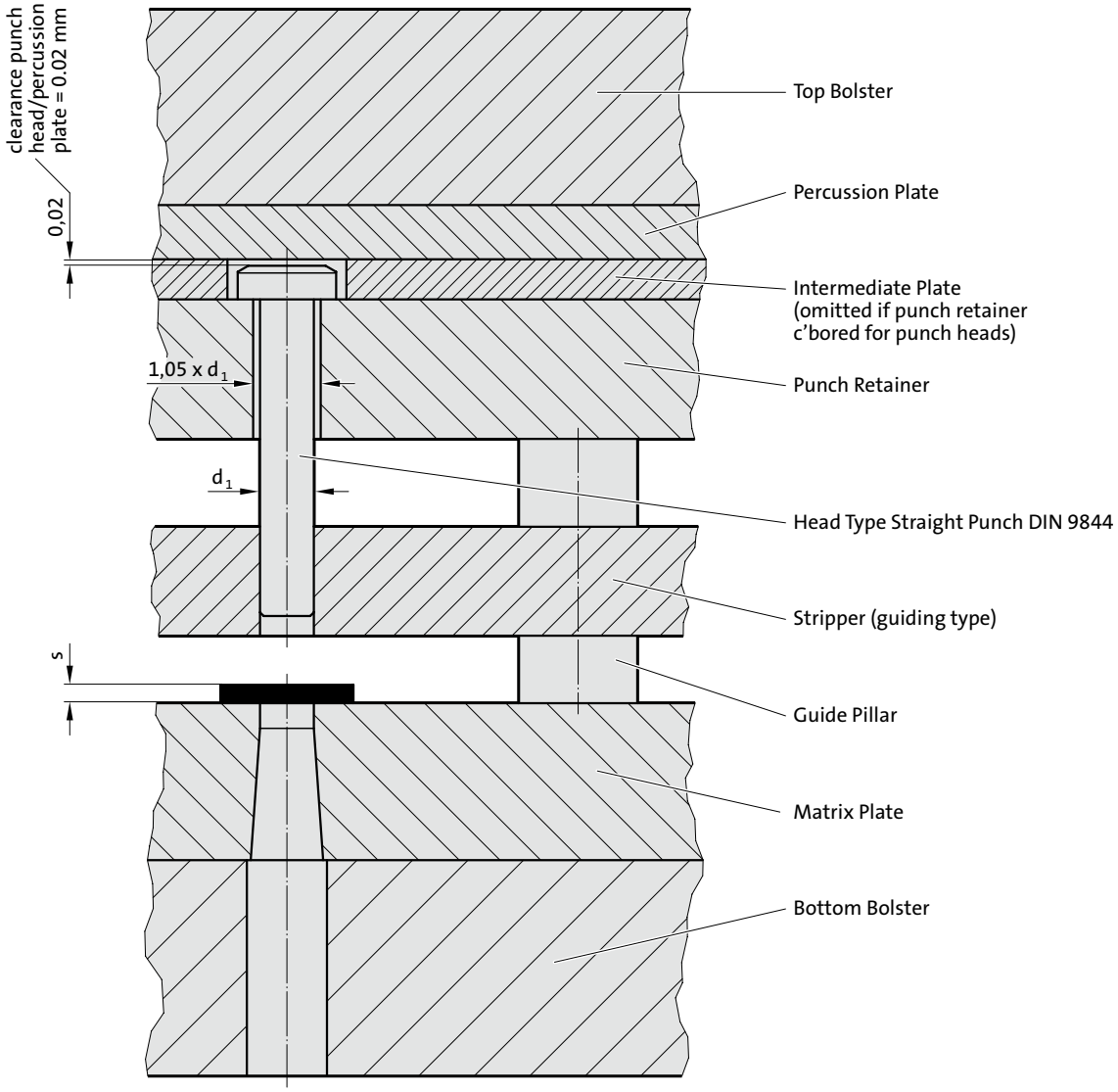

subject to alterations

Punch DIN 9844, Shape A

220.

Detail Ⓧ
normal execution
with radius

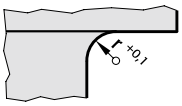

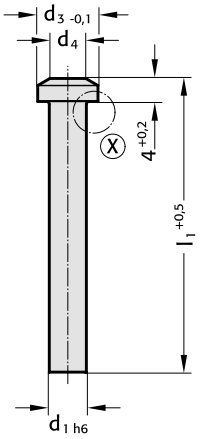

$d_4 = d_1^{+0,5}$



Material:

HSS
Order No 220.3.
Hardness:
Shaft 64 ± 2 HRC
Head 52 ± 3 HRC

HST
Order No 220.4.
Hardness:
Surface ≥ 950 HV 0,3
Head 52 ± 3 HRC

Description of FIBRO materials for tool and die components see at the beginning of Chapter E.

Execution:

Head hot upset-forged. Shaft and shoulder precision plunge-ground.

Stock lenghts: 71, 90, 112 mm.
other lengths and diameters on request!

220. Punch DIN 9844, Shape A

	Diameter steps						
d_1	d_1	d_3	r	l_1	71	90	112
2 - 2.2	0.1	3.6	0.2		●	●	●
2.3 - 2.5	0.1	4	0.2		●	●	●
2.6 - 2.8	0.1	4.5	0.3		●	●	●
2.9 - 3.2	0.1	5	0.3		●	●	●
3.3 - 3.5	0.1	6	0.3		●	●	●
3.6 - 4	0.1	7	0.3		●	●	●
4.1 - 4.5	0.1	8	0.5		●	●	●
4.6 - 5	0.1	8.5	0.5		●	●	●
5.1 - 5.4	0.1	9	0.5		●	●	●
5.5 - 5.9	0.1	9.5	0.5		●	●	●
6 - 6.4	0.1	10	0.5		●	●	●
6.5 - 7	0.5	10.8	0.7		●	●	●
7.5 - 8	0.5	12	0.7		●	●	●
8.5 - 9	0.5	13	0.7		●	●	●
9.5 - 10	0.5	14.5	0.7		●	●	●
10.5 - 11	0.5	16	1		●	●	●
11.5 - 12.5	0.5	18	1		●	●	●
13 - 14.5	0.5	20	1		●	●	●
15 - 16	0.5	22	1		●	●	●

Ordering Code (example):

Punch DIN 9844, Shape A		=220.	
Material MAT	HSS	=	3.
Cutting diameter d_1	5.5 mm	=	0550.
Length l_1	71 mm	=	071
Order No		=220.3.0550.071	

Punch DIN 9844, Shape B



221.

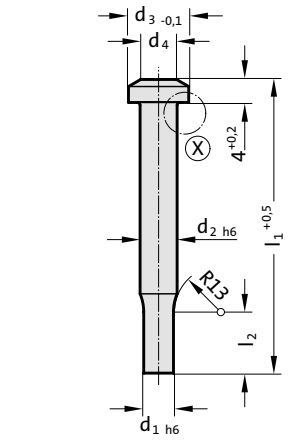

$d_4 = d_1^{+0,5}$

Detail X
normal execution
with radius

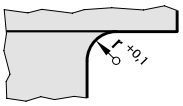

221. Punch DIN 9844, Shape B

	Diameter steps								
d_1	d_1	d_2	d_3	l_2	r	l_1	71	90	112
0.1 - 1.9	0.05	2	3.6	7	0.2		●	●	●
1.95 - 2.4	0.05	2.5	4	7	0.2		●	●	●
2.5 - 3.1	0.1	3.2	5	7	0.3		●	●	●
3.2 - 3.9	0.1	4	7	7	0.3		●	●	●
4 - 4.9	0.1	5	8.5	7	0.5		●	●	●
5 - 6.2	0.1	6.3	10	7	0.5		●	●	●
6.3 - 7.9	0.1	8	12	16	0.7		●	●	●
8 - 9.9	0.1	10	14.5	16	0.7		●	●	●
10 - 12.4	0.1	12.5	18	16	1		●	●	●
12.5 - 15.9	0.1	16	22	16	1		●	●	●

Material:

HSS
Order No 221.3.
Hardness:
Shaft 64 ± 2 HRC
Head 52 ± 3 HRC

HST
Order No 221.4.
Hardness:
Surface ≥ 950 HV 0,3
Head 52 ± 3 HRC

Description of FIBRO materials for tool and die components see at the beginning of Chapter E.

Execution:

Head hot upset-forged. Shaft and shoulder precision plunge-ground.

Stock lenghts: 71, 90, 112 mm.
other lengths and diameters on request!

Ordering Code (example):

Punch DIN 9844, Shape B		=221.	
Material MAT	HSS	=	3.
Cutting diameter d_1	5 mm	=	0500.
Length l_1	71 mm	=	071
Order No		=221.3. 0500.071	

subject to alterations

Punch similar to VDI 3374

266.

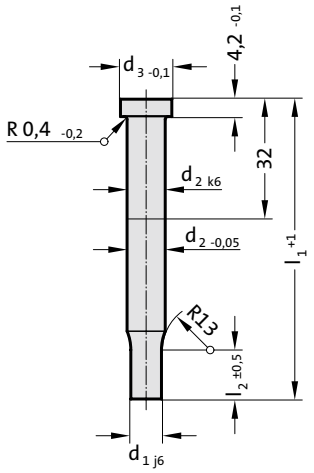



Material:

HSS
Order No 266.3.
Hardness:
Shaft 62 ± 2 HRC
Head 45 ± 5 HRC

Description of FIBRO materials for tool and die components see at the beginning of Chapter E.

Execution:

Head hot upset-forged. Shaft and shoulder precision plunge-ground.

Stock lenghts: 71, 80 mm.
other lengths and diameters on request!

266. Punch similar to VDI 3374

	Diameter steps						
d_1	d_1	d_2	d_3	l_2	$l_1{}^{+1}$	71	80
5 - 8.9	0.1	10	13	13		●	●
9 - 11.9	0.1	13	16	13		●	●
12 - 15.9	0.1	16	19	13		●	●
16 - 19.5	0.5	20	24	13		●	●
20 - 24.5	0.5	25	29	13		●	●

Ordering Code (example):

Punch similar to VDI 3374		=	266.
Material MAT	HSS	=	3.
Cutting diameter d_1	12 mm	=	1200.
Length l_1	71 mm	=	071
Order No		=	266.3.1200.071

Punch with ejector pin



267.

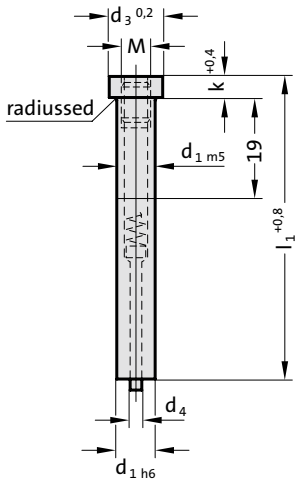

267. Punch with ejector pin

$d_{1\,h6}$	d_3	d_4	k	l_1	l_1	l_1	l_1	M
				60	71	80	90	
5	8	0.45	5	●	●			M2.5
6	9	0.7	5	●	●	●	●	M3
8	11	1.04	5	●	●	●	●	M4
10	13	1.47	5	●	●	●	●	M5
13	16	1.47	5	●	●	●	●	M5
16	19	2.26	6.4	●	●	●	●	M6
20	23	2.26	6.4	●	●	●	●	M6
25	28	2.26	6.4	●	●	●	●	M6

Material:

HSS
Order No 267.3.
Hardness:
Shaft 64 ± 2 HRC
Head 52 ± 3 HRC

Description of FIBRO materials for tool and die components see at the beginning of Chapter E.

Execution:

Head hot upset-forged. Shaft and shoulder precision plunge-ground.

Ordering Code (example):

Punch with ejector pin		=267.	
Material MAT	HSS	=	3.
Shaft diameter d_1	13 mm	=	1300.
Length l_1	60 mm	=	060
Order No		=267.	3.1300.060

subject to alterations

Punch with ejector pin, stepped, short point

268.

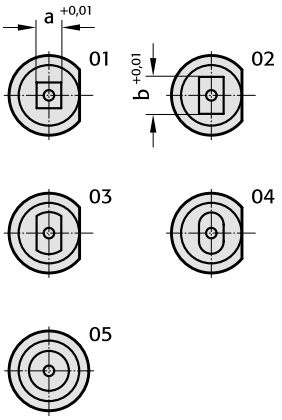

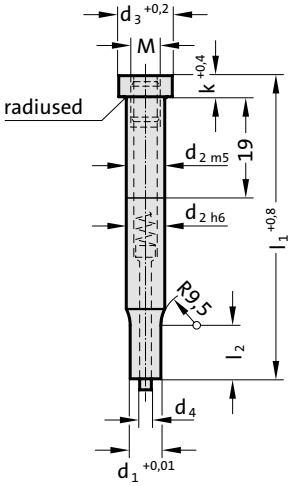



Material:

HSS
Order No 268.3.
Hardness:
Shaft 64 ± 2 HRC
Head 52 ± 3 HRC

Description of FIBRO materials for tool and die components see at the beginning of Chapter E.

Execution:

Head hot upset-forged. Shaft and shoulder precision plunge-ground.

Key flats parallel with longest size of shape, unless otherwise specified.

268. Punch with ejector pin, stepped, short point

d_1	d_2	d_3	d_4	k	l_2	l_1 60	l_1 71	l_1 80	l_1 90	a_{min}	M
1.6 - 4.9	5	8	0.45	5	7	●	●			1.6	M2.5
2.3 - 5.9	6	9	0.7	5	7	●	●	●	●	2.3	M3
3.2 - 7.9	8	11	1.04	5	13	●	●	●	●	3.2	M4
4.8 - 9.9	10	13	1.47	5	13	●	●	●	●	4.8	M5
4.8 - 12.9	13	16	1.47	5	13	●	●	●	●	4.8	M5
5.5 - 15.9	16	19	2.26	6.4	13	●	●	●	●	5.5	M6
5.5 - 19.9	20	23	2.26	6.4	13	●	●	●	●	5.5	M6
6.5 - 24.9	25	28	2.26	6.4	13	●	●	●	●	6.5	M6

Ordering Code (example):

Punch with ejector pin, stepped, short point		=268.	
Material MAT	HSS	= 3.	
Shaft diameter d_2	13 mm	= 1300.	
Length l_1	60 mm	= 060.	
Die shape FORM	Square	= 01.	
Die shape width a	4.8 mm	= 0480.	
Die shape length b	4.8 mm	= 0480	
Order No		=268.3.1300.060.01.0480.0480	

Punch with ejector pin, stepped, long point



269.

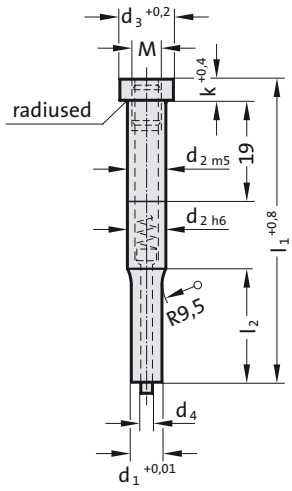

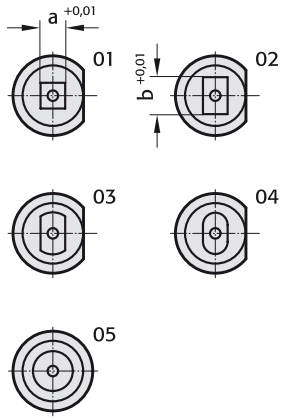

269. Punch with ejector pin, stepped, long point

d_1	d_2	d_3	d_4	k	l_2	l_1 60	l_1 71	l_1 80	l_1 90	a_{min}	M
2.3 - 5.9	6	9	0.7	5	17.5	●	●	●	●	2.3	M3
3.2 - 7.9	8	11	1.04	5	25	●	●	●	●	3.2	M4
4.8 - 9.9	10	13	1.47	5	28	●	●	●	●	4.8	M5
4.8 - 12.9	13	16	1.47	5	28	●	●	●	●	4.8	M5
5.5 - 15.9	16	19	2.26	6.4	28	●	●	●	●	5.5	M6
5.5 - 19.9	20	23	2.26	6.4	28	●	●	●	●	5.5	M6
6.5 - 24.9	25	28	2.26	6.4	28	●	●	●	●	6.5	M6

Material:

HSS
Order No 269.3.
Hardness:
Shaft 64 ± 2 HRC
Head 52 ± 3 HRC

Description of FIBRO materials for tool and die components see at the beginning of Chapter E.

Execution:

Head hot upset-forged. Shaft and shoulder precision plunge-ground.

Key flats parallel with longest size of shape, unless otherwise specified.

Ordering Code (example):

Punch with ejector pin, stepped, long point		=269.	
Material MAT	HSS	=	3.
Shaft diameter d_2	13 mm	=	1300.
Length l_1	60 mm	=	060.
Die shape FORM	Square	=	01.
Die shape width a	4.8 mm	=	0480.
Die shape length b	4.8 mm	=	0480
Order No		=269.3.1300.060.01.0480.0480	

subject to alterations

FIBRO

Sintered Hard Metal
HIP-densified

The HIP process (hot isostatic pressing) consists of a special densification treatment.

Applied after the sintering stage, this widely used process involves compacting, at very high temperature and pressure, of the carbide structure. It yields an appreciable reduction in porosity, better strength properties and thus longer die life of press tool members.

As can be seen from the diagrams and tables, both compressive and flexural strength are improved.

For stamping die tooling, hard metal types of medium tungsten particle size, with a cobalt content of 9 to 12%, have been found succesful in a wide field of applications.

Tensile strength of Tungsten – 6% Cobalt Carbide in the sintered-only versus HIP-densified state, in dependance of Cristallite particle size

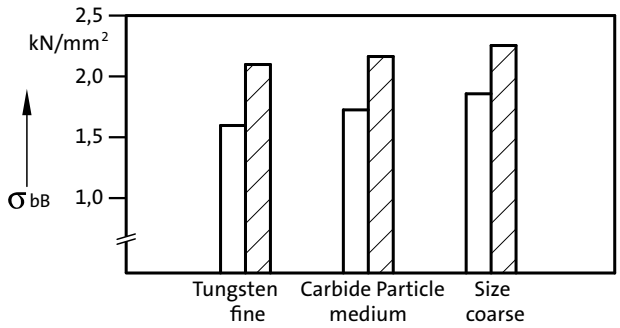

a) influence of crystallite size of hard metal phase
(left: sintered only – right: sintered and HIP-treated)

Tensile strength of Tungsten – Cobalt Carbide in the sintered-only versus HIP-densified state, in dependance of total Cobalt content

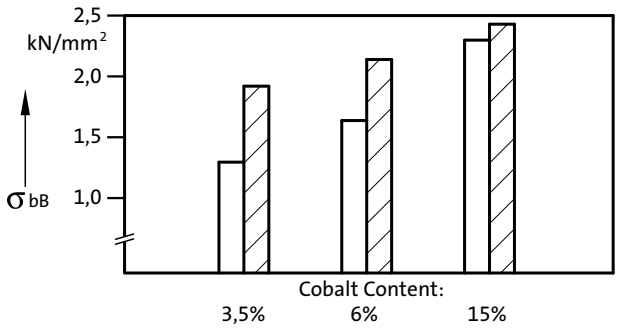

b) influence of cobalt content
(left: sintered only – right: sintered and HIP-treated)

Tungsten carbide – particle size	Co %	HV_{30}-Hardness		Flexural Strength N/mm²	
		befor	after	befor	after
fine	3	1800	no changes	1200	1700
	6	1650		1500	2300
	9	1400		2000	2600
medium	6	1600		2000	2600
	9	1450		2350	2700
	12	1300		2450	2900
	15	1200		2700	2850
coarse	6	1400		1900	2250
	8	1350		2300	2600
	10	1200		2650	2850

Flexural strength and HV30-hardness of Tungsten-Cobalt Carbides with/without HIP-treatment and in dependance of Tungsten Carbide particle size and Cobalt content.

subject to alterations

Punch similar DIN 9844, Shape A

270.

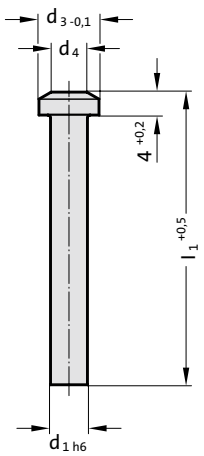

$d_4 = d_1{}^{+0,5}$



Material:

Tungsten-Cobalt-Carbide
Order No 270.9.

Execution:

Shaft precision ground.
Head steel, brazed to shaft or Tungsten-Cobalt Carbide.

Other diameters and lengths on request.

270. Punch similar DIN 9844, Shape A

	Diameter steps						
d_1	d_1	d_3	r	l_1	71	90	112
1 - 2.2	0.1	3.6	0.2		●	●	●
2.3 - 2.5	0.1	4	0.2		●	●	●
2.6 - 2.8	0.1	4.5	0.3		●	●	●
2.9 - 3.2	0.1	5	0.3		●	●	●
3.3 - 3.5	0.1	6	0.3		●	●	●
3.6 - 4	0.1	7	0.3		●	●	●
4.1 - 4.5	0.1	8	0.5		●	●	●
4.6 - 5	0.1	8.5	0.5		●	●	●
5.1 - 5.4	0.1	9	0.5		●	●	●
5.5 - 5.9	0.1	9.5	0.5		●	●	●
6 - 6.4	0.1	10	0.5		●	●	●
6.5 - 7	0.5	10.8	0.7		●	●	●
7.5 - 8	0.5	12	0.7		●	●	●
8.5 - 9	0.5	13	0.7		●	●	●
9.5 - 10	0.5	14.5	0.7		●	●	●
10.5 - 11	0.5	16	1		●	●	●
11.5 - 12.5	0.5	18	1		●	●	●
13 - 14.5	0.5	20	1		●	●	●
15 - 16	0.5	22	1		●	●	●

Ordering Code (example):

Punch similar DIN 9844, Shape A		=270.9.	
Shaft diameter d_1	4.7 mm	=	0470.
Length l_1	71 mm	=	071
Order No		=270.9.	0470.071

Punch similar DIN 9844, Shape B



271.

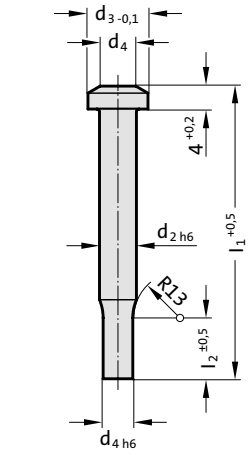

$d_4 = d_1{}^{+0,5}$

271. Punch similar DIN 9844, Shape B

Diameter steps d_1	d_1	d_2	d_3	l_2	r	l_1	71	90	112
0.5 - 1.9	0.05	2	3.6	7	0.2		●	●	●
1.95 - 2.4	0.05	2.5	4	7	0.2		●	●	●
2.5 - 3.1	0.1	3.2	5	7	0.3		●	●	●
3.2 - 3.9	0.1	4	7	7	0.3		●	●	●
4 - 4.9	0.1	5	8.5	7	0.5		●	●	●
5 - 6.2	0.1	6.3	10	7	0.5		●	●	●
6.3 - 7.9	0.1	8	12	16	0.7		●	●	●
8 - 9.9	0.1	10	14.5	16	0.7		●	●	●
10 - 12.4	0.1	12.5	18	16	1		●	●	●
12.5 - 15.9	0.1	16	22	16	1		●	●	●

Material:

Tungsten-Cobalt-Carbide
Order No 271.9.

Execution:

Shaft precision ground.
Head steel, brazed to shaft or Tungsten-Cobalt Carbide.

Other diameters and lengths on request.

Ordering Code (example):

Punch similar DIN 9844, Shape B		=271.9.	
Cutting diameter d_1	7.3 mm	=	0730.
Length l_1	71 mm	=	071
Order No		=271.9.	0730.071

subject to alterations

Punch similar DIN 9861, Shape D

272.

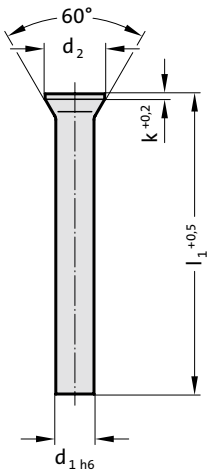



Material:

Tungsten-Cobalt-Carbide
Order No 272.9.

Execution:

Shaft precision ground.
Head steel, brazed to shaft or Tungsten-Cobalt Carbide.

Other diameters and lengths on request.

272. Punch similar DIN 9861, Shape D

	Diameter steps						
d_1	d_1	d_2	k	l_1	71	80	100
1.5	0.1	2.2	0.5		●	●	●
1.6 - 1.7	0.1	2.5	0.5		●	●	●
1.8 - 1.9	0.1	2.8	0.5		●	●	●
2	0.1	3	0.5		●	●	●
2.1 - 2.2	0.1	3.2	0.5		●	●	●
2.3 - 2.5	0.1	3.5	0.5		●	●	●
2.6 - 2.9	0.1	4	0.5		●	●	●
3 - 3.4	0.1	4.5	0.5		●	●	●
3.5 - 3.9	0.1	5	0.5		●	●	●
4 - 4.4	0.1	5.5	0.5		●	●	●
4.5 - 4.9	0.1	6	0.5		●	●	●
5 - 5.4	0.1	6.5	0.5		●	●	●
5.5 - 5.9	0.1	7	0.5		●	●	●
6 - 6.4	0.1	8	0.5		●	●	●
6.5 - 7	0.5	9	1		●	●	●
7.5 - 8	0.5	10	1		●	●	●
8.5 - 9	0.5	11	1		●	●	●
9.5 - 10	0.5	12	1		●	●	●
10.5 - 11	0.5	13	1		●	●	●
11.5 - 12	0.5	14	1		●	●	●
12.5 - 13	0.5	15	1		●	●	●
13.5 - 14	0.5	16	1.5		●	●	●
14.5 - 15	0.5	17	1.5		●	●	●
15.5 - 16	0.5	18	1.5		●	●	●

Ordering Code (example):

Punch similar DIN 9861, Shape D		=272.9.	
Shaft diameter d_1	5 mm	=	0500.
Length l_1	71 mm	=	071
Order No		=272.9.	0500.071

Punch similar DIN 9861, Shape C



273.

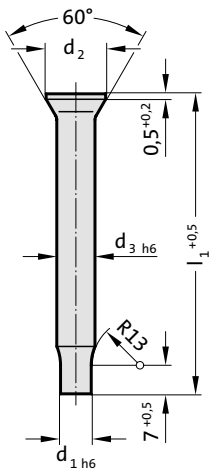

273. Punch similar DIN 9861, Shape C

Diameter steps				
d_1	d_1	d_2	d_3	l_1
0.5 - 1.5	0.05	3	2	71
1.55 - 2.95	0.05	4.5	3	71

Material:

Tungsten-Cobalt-Carbide
Order No 273.9.

Execution:

Shaft precision ground.
Head steel, brazed to shaft or Tungsten-Cobalt Carbide.

Other diameters and lengths on request.

Ordering Code (example):

Punch similar DIN 9861, Shape C		=273.9.	
Cutting diameter d_1	1.75 mm	=	0175.
Length l_1	71 mm	=	71
Order No		=273.9.	0175.71

subject to alterations



Ball-Lock Punches

Ordering example
Ball-Lock Punches

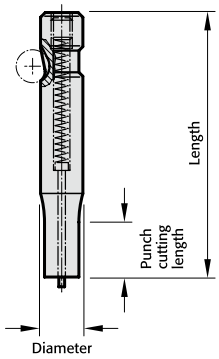

Note: **See table for standard dimensions**
Special dimensions to order

2 2 4 2 . 2 F 1 . 0 6 5 0 . 0 4 5 0 B

Format: Slot length P = 6,5 mm

Format: Slot width W = 4,5 mm

Punch:
22 without ejector pin
27 with ejector pin

Punch cutting length: l_1	Order No
13	= 1
19	= 2
25	= 3
30	= 4
special	= X

Version:	Order No
blank	= 0
round	= 1
square	= 2
rectangular	= 3
slot	= 4
rectangle with radiused corners	= 5
pilot pin with tapered tip	= 6
pilot pin parabolic tip	= 7
special shapes	= 9

Angle:	Order Code character
0°	= A
90°	= B
180°	= C
270°	= D
special	= X

Type:	Order No
light	= 2
heavy	= 3
punch larger, light	= 4
punch larger, heavy	= 5

Diameter: d_2	Order No
6 (light duty only)	= 1
10	= 2
13	= 3
16	= 4
20	= 5
25	= 6
32	= 7
38 (light duty only)	= 8
40 (heavy duty only)	= 9

Lenght: l	Order Code character
50	= A
56	= B
63	= C
71	= D
80	= E
90	= F
100	= G
110	= H
125	= J
140	= K
150	= L
175	= M
200	= N
special	= X

Ordering Code (Example):

2 2 4 2 . 2 F 1 . 0 6 5 0 . 0 4 5 0 B

- Angle = 90° (B)
- Format: Slot, width W = 4,5 mm (0450)
- Format: Slot, length P = 6,5 mm (0650)
- Punch cutting length: l_1 = 13 mm (1)
- Length: l = 90 mm (F)
- Diameter: d_2 = 10 mm (2)
- Type = light (2)
- Version: Slot (4)
- Punch: without ejector pin (22)

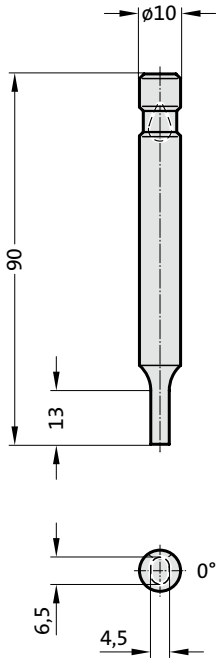

subject to alterations

Ball lock punch, blank, light duty

2202.

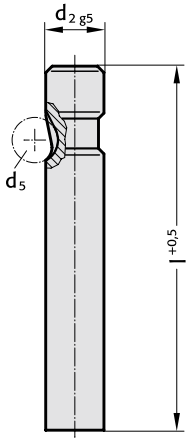



2202. Ball lock punch, blank, light duty

d_2 / (Order No)	d_5	l / (Order Code character)	63 (C)	71 (D)	80 (E)	90 (F)	100 (G)	110 (H)	125 (J)	140 (K)	150 (l)	175 (M)	200 (N)
6 / (1)	6		●	●	●	●	●						
10 / (2)	8		●	●	●	●	●	●	●				
13 / (3)	8		●	●	●	●	●	●	●	●	●	●	
16 / (4)	8		●	●	●	●	●	●	●	●	●	●	
20 / (5)	8		●	●	●	●	●	●	●	●	●	●	
25 / (6)	8		●	●	●	●	●	●	●	●	●	●	●
32 / (7)	8			●	●	●	●	●	●	●	●	●	●
38 / (8)	8				●	●	●	●	●	●	●	●	●

Ordering code (example):

2 2 0 2 . 7 G

Length: l	**Order Code character**
100 mm	= (G)
Diameter: d_2	**Order No**
32 mm	= (7)
Type:	**Order No**
light	= (2)
Version:	**Order No**
blank	= (0)
Punch:	
without ejector pin	= 22

Material:

HSS
Hardness 62 ± 2 HRC

Execution:

Shaft fine ground.
Special dimensions on request.

Ball lock punch, stepped, round, light duty



2212.

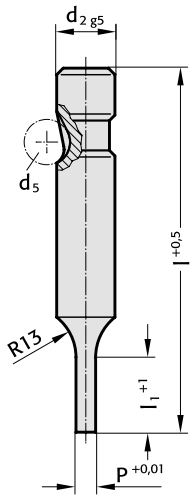

2212. Ball lock punch, stepped, round, light duty

d_2 / (Order No)	d_5	P	l_1 / (Order No)*	l / (Order Code character)	63 (C)	71 (D)	80 (E)	90 (F)	100 (G)
6 / (1)	6	1,6-5,9	13 (1)		●	●	●	●	●
10 / (2)	8	1,6-9,9	13 (1) 19 (2)		●	●	●	●	●
13 / (3)	8	5,0-12,9	13 (1) 19 (2)		●	●	●	●	●
16 / (4)	8	8,0-15,9	13 (1) 19 (2) 25 (3)		●	●	●	●	●
20 / (5)	8	12,0-19,9	13 (1) 19 (2) 25 (3)		●	●	●	●	●
25 / (6)	8	16,0-24,9	13 (1) 19 (2) 25 (3)		●	●	●	●	●
32 / (7)	8	24,0-31,9	13 (1) 19 (2) 25 (3)			●	●	●	●
38 / (8)	8	30,0-37,9	19 (2) 25 (3) 30 (4)				●	●	●

*l_1=10 where P < 2.20

Material:

HSS
Hardness 62 ± 2 HRC

Execution:

Shaft and punch diameter fine ground.
Special dimensions on request.

Ordering-code (example):

2 2 1 2 . 7 G 2 . 2 4 5 0

Format: Round	
P = ø24,5 mm	= 2450
Punch cutting length: l_1	**Order No**
19 mm	= (2)
length: l	**Order code character**
100 mm	= (G)
diameter: d_2	**Order No**
32 mm	= (7)
Type:	**Order No**
light	= (2)
Version:	**Order No**
Round	= (1)
Punch:	
without ejector pin	= 22

subject to alterations

Ball lock punch, stepped, square, light duty

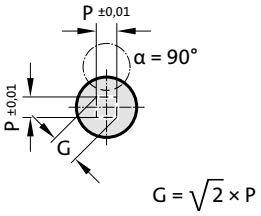

2222.

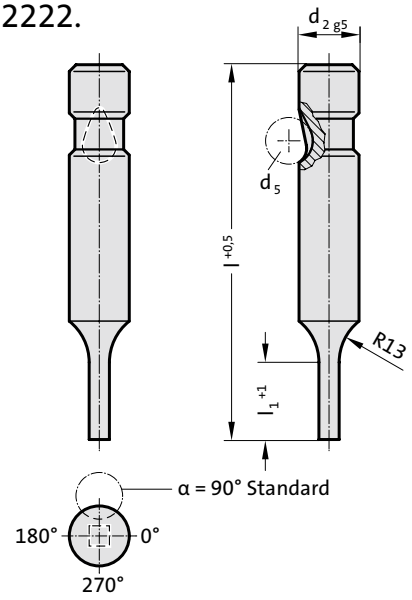



2222. Ball lock punch, stepped, square, light duty

d_2 / (Order No)	d_5	P_{min}	G_{max}	l_1 / (Order No)*	l / (Order Code character)	63 (C)	71 (D)	80 (E)	90 (F)	100 (G)
6 / (1)	6	1.6	5.9	13 (1)		●	●	●	●	●
10 / (2)	8	1.6	9.9	13 (1) 19 (2)		●	●	●	●	●
13 / (3)	8	4.5	12.9	13 (1) 19 (2)		●	●	●	●	●
16 / (4)	8	6	15.9	13 (1) 19 (2) 25 (3)		●	●	●	●	●
20 / (5)	8	8	19.9	13 (1) 19 (2) 25 (3)		●	●	●	●	●
25 / (6)	8	10	24.9	13 (1) 19 (2) 25 (3)		●	●	●	●	●
32 / (7)	8	12.5	31.9	13 (1) 19 (2) 25 (3)			●	●	●	●
38 / (8)	8	14	37.9	19 (2) 25 (3) 30 (4)				●	●	●

*l_1=10 where P < 2.20

Ordering-code (example):

2 2 2 2 . 2 F 1 . 0 6 5 0 B

Angle:		**Order code character**
90°		= (B)
Format: Square, length P		
P = 6,5 mm		= 0650
Punch cutting length: l_1		**Order No**
13 mm		= (1)
Length: l		**Order code character**
90 mm		= (F)
Diameter: d_2		**Order No**
10 mm		= (2)
Type:		**Order No**
light		= (2)
Version:		**Order No**
Square		= (2)
Punch:		
without ejector pin		= 22

Material:

HSS
Hardness 62 ± 2 HRC

Execution:

Shaft and punch shape fine ground.
Special dimensions on request.

Ball lock punch, stepped, rectangular, light duty



2232.

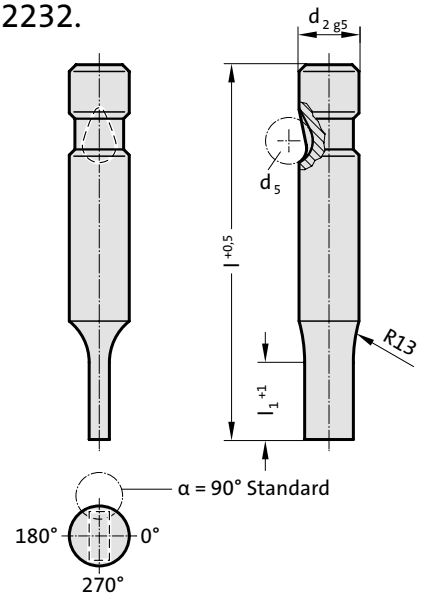

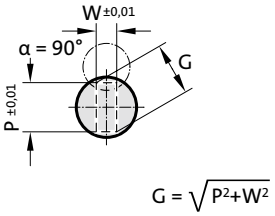

2232. Ball lock punch, stepped, rectangular, light duty

d_2 / (Order No)	d_5	W_{min}	G_{max}	l_1 / (Order No)*	l / (Order Code character)	63 (C)	71 (D)	80 (E)	90 (F)	100 (G)
6 / (1)	6	1.6	5.9	13 (1)		●	●	●	●	●
10 / (2)	8	1.6	9.9	13 (1) 19 (2)		●	●	●	●	●
13 / (3)	8	4.5	12.9	13 (1) 19 (2)		●	●	●	●	●
16 / (4)	8	6	15.9	13 (1) 19 (2) 25 (3)		●	●	●	●	●
20 / (5)	8	8	19.9	13 (1) 19 (2) 25 (3)		●	●	●	●	●
25 / (6)	8	10	24.9	13 (1) 19 (2) 25 (3)		●	●	●	●	●
32 / (7)	8	12.5	31.9	13 (1) 19 (2) 25 (3)			●	●	●	●
38 / (8)	8	14	37.9	19 (2) 25 (3) 30 (4)				●	●	●

*l_1=10 where W < 2.20

Material:

HSS
Hardness 62 ± 2 HRC

Execution:

Shaft and punch shape fine ground.
Special dimensions on request.

Ordering-code (example):

2 2 3 2 . 2 F 1 . 0 6 5 0 . 0 4 5 0 B

Angle:	**Order code character**
90°	= (B)
Format: Rectangular, width W	
W = 4,5 mm	= 0450
Format: Rectangular, length P	
P = 6,5 mm	= 0650
Punch cutting length: l_1	**Order No**
13 mm	= (1)
Length: l	**Order code character**
90 mm	= (F)
Diameter: d_2	**Order No**
10 mm	= (2)
Type:	**Order No**
light	= (2)
Version:	**Order No**
Rectangular	= (3)
Punch:	
without ejector pin	= 22

subject to alterations

Ball lock punch, stepped, slot, light duty

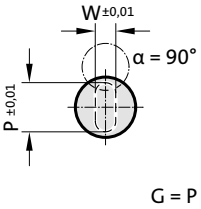

2242.

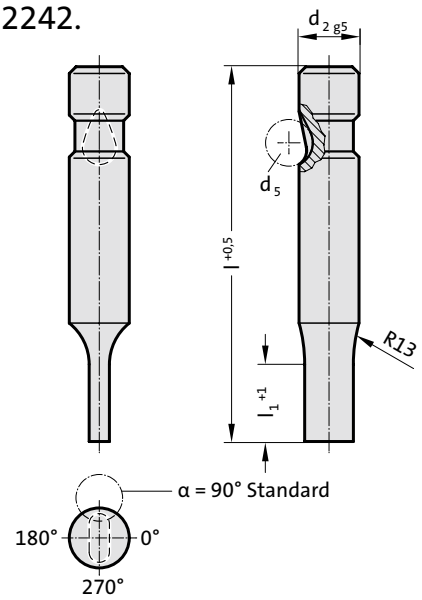



2242. Ball lock punch, stepped, slot, light duty

d_2 / (Order No)	d_5	W_{min}	G_{max}	l_1 / (Order No)*	l / (Order Code character)	63 (C)	71 (D)	80 (E)	90 (F)	100 (G)
6 / (1)	6	1.6	5.9	13 (1)		●	●	●	●	●
10 / (2)	8	1.6	9.9	13 (1) 19 (2)		●	●	●	●	●
13 / (3)	8	4.5	12.9	13 (1) 19 (2)		●	●	●	●	●
16 / (4)	8	6	15.9	13 (1) 19 (2) 25 (3)		●	●	●	●	●
20 / (5)	8	8	19.9	13 (1) 19 (2) 25 (3)		●	●	●	●	●
25 / (6)	8	10	24.9	13 (1) 19 (2) 25 (3)		●	●	●	●	●
32 / (7)	8	12.5	31.9	13 (1) 19 (2) 25 (3)			●	●	●	●
38 / (8)	8	14	37.9	19 (2) 25 (3) 30 (4)				●	●	●

*l_1=10 where W < 2.20

Ordering-code (example):

2 2 4 2 . 2 F 1 . 0 6 5 0 . 0 4 5 0 B

	Angle	**Order code character**
	90°	= (B)
	Format: Slot, width W	
	W = 4,5 mm	= 0450
	Format: Slot, length P	
	P = 6,5 mm	= 0650
	Punch cutting length: l_1	**Order No**
	13 mm	= (1)
	Length: l	**Order code character**
	90 mm	= (F)
	Diameter: d_2	**Order No**
	10 mm	= (2)
	Type:	**Order No**
	light	= (2)
	Version:	**Order No**
	Slot	= (4)
	Punch:	
	without ejector pin	= 22

Material:

HSS
Hardness 62 ± 2 HRC

Execution:

Shaft and punch shape fine ground.
Special dimensions on request.

Ball lock punch, stepped, rectangle with radiussed corners, light duty



2252.

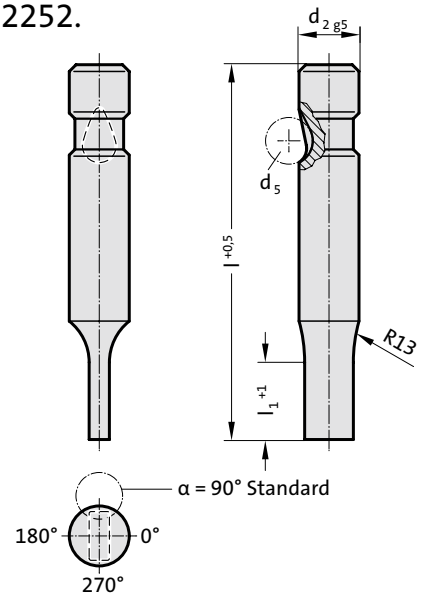

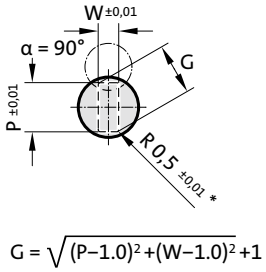

$$G = \sqrt{(P-1.0)^2+(W-1.0)^2}+1$$

2252. Ball lock punch, stepped, rectangle with radiussed corners, light duty

d_2 / (Order No)	d_5	W_{min}	G_{max}	l_1 / (Order No)*	l / (Order Code character)	63 (C)	71 (D)	80 (E)	90 (F)	100 (G)
6 / (1)	6	1.6	5.9	13 (1)		●	●	●	●	●
10 / (2)	8	1.6	9.9	13 (1) 19 (2)		●	●	●	●	●
13 / (3)	8	4.5	12.9	13 (1) 19 (2)		●	●	●	●	●
16 / (4)	8	6	15.9	13 (1) 19 (2) 25 (3)		●	●	●	●	●
20 / (5)	8	8	19.9	13 (1) 19 (2) 25 (3)		●	●	●	●	●
25 / (6)	8	10	24.9	13 (1) 19 (2) 25 (3)		●	●	●	●	●
32 / (7)	8	12.5	31.9	13 (1) 19 (2) 25 (3)			●	●	●	●
38 / (8)	8	14	37.9	19 (2) 25 (3) 30 (4)				●	●	●

*l_1=10 where W < 2.20

Material:

HSS
Hardness 62 ± 2 HRC

Execution:

Shaft and punch shape fine ground.
Special dimensions on request.
* For other radius options, see standardised special shapes.

Ordering-code (example):

2252.2F1.0650.0450B

Angle:	**Order code character**
90°	= (B)
Format: Rectangle with radiused corners, width W	
W = 4,5 mm	= 0450
Format: Rectangle with radiused corners, length P	
P = 6,5 mm	= 0650
Punch cutting length: l_1	**Order No**
13 mm	= (1)
Length: l	**Order code character**
90 mm	= (F)
Diameter: d_2	**Order No**
10 mm	= (2)
Type:	**Order No**
light	= (2)
Version:	**Order No**
Rectangle with radiused corners	= (5)
Punch:	
without ejector pin	= 22

subject to alterations

Ball lock punch, blank, with ejector pin, light duty

2702.

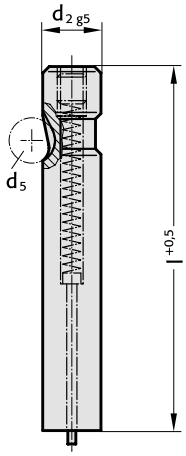



2702. Ball lock punch, blank, with ejector pin, light duty

d_2 / (Order No)	d_5	l / (Order Code character)	63 (C)	71 (D)	80 (E)	90 (F)	100 (G)
6 / (1)	6		●	●	●	●	●
10 / (2)	8		●	●	●	●	●
13 / (3)	8		●	●	●	●	●
16 / (4)	8		●	●	●	●	●
20 / (5)	8		●	●	●	●	●
25 / (6)	8		●	●	●	●	●
32 / (7)	8			●	●	●	●
38 / (8)	8				●	●	●

Ordering-code (example):

2 7 0 2 . 7 G

Length: l		**Order code character**
100 mm		= (G)
Diameter: d_2		**Order No**
32 mm		= (7)
Type:		**Order No**
light		= (2)
Version:		**Order No**
blank		= (0)
Punch:		
with ejector pin		= 27

Material:

HSS
Hardness 62 ± 2 HRC

Execution:

Shaft fine ground.
Special dimensions on request.

FIBRO

Ball lock punch, stepped, round, with ejector pin, light duty



2712.

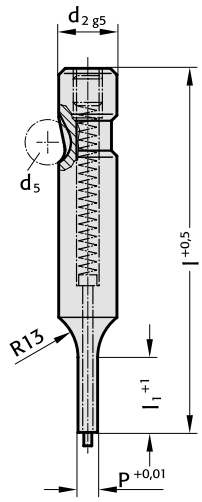

2712. Ball lock punch, stepped, round, with ejector pin, light duty

d_2 / (Order No)	d_5	P	l_1 / (Order No)*	l / (Order Code character)	63 (C)	71 (D)	80 (E)	90 (F)	100 (G)
6 / (1)	6	1,6-5,9	13 (1)		●	●	●	●	●
10 / (2)	8	1,6-9,9	13 (1) 19 (2)		●	●	●	●	●
13 / (3)	8	5,0-12,9	13 (1) 19 (2)		●	●	●	●	●
16 / (4)	8	8,0-15,9	13 (1) 19 (2) 25 (3)		●	●	●	●	●
20 / (5)	8	12,0-19,9	13 (1) 19 (2) 25 (3)		●	●	●	●	●
25 / (6)	8	16,0-24,9	13 (1) 19 (2) 25 (3)		●	●	●	●	●
32 / (7)	8	24,0-31,9	13 (1) 19 (2) 25 (3)			●	●	●	●
38 / (8)	8	30,0-37,9	19 (2) 25 (3) 30 (4)				●	●	●

*l_1=10 where P < 2.20

Material:

HSS
Hardness 62 ± 2 HRC

Execution:

Shaft and punch diameter fine ground.
Special dimensions on request.

Ordering-code (example):

2 7 1 2 . 7 G 2 . 2 4 5 0

Format: Round	
P = ø24,5 mm	= 2450
Punch cutting length: l_1	**Order No**
19 mm	= (2)
length: l	**Order code character**
100 mm	= (G)
diameter: d_2	**Order No**
32 mm	= (7)
Type:	**Order No**
light	= (2)
Version:	**Order No**
Round	= (1)
Punch:	
with ejector pin	= 27

subject to alterations

Ball lock punch, stepped, square, with ejector pin, light duty

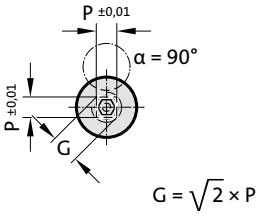

2722.

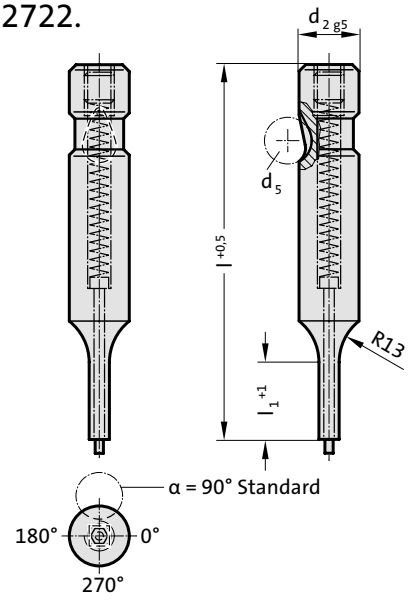



2722. Ball lock punch, stepped, square, with ejector pin, light duty

d_2 / (Order No)	d_5	P_{min}	G_{max}	l_1 / (Order No)*	l / (Order Code character)	63 (C)	71 (D)	80 (E)	90 (F)	100 (G)
6 / (1)	6	1.6	5.9	13 (1)		●	●	●	●	●
10 / (2)	8	1.6	9.9	13 (1) 19 (2)		●	●	●	●	●
13 / (3)	8	4.5	12.9	13 (1) 19 (2)		●	●	●	●	●
16 / (4)	8	6	15.9	13 (1) 19 (2) 25 (3)		●	●	●	●	●
20 / (5)	8	8	19.9	13 (1) 19 (2) 25 (3)		●	●	●	●	●
25 / (6)	8	10	24.9	13 (1) 19 (2) 25 (3)		●	●	●	●	●
32 / (7)	8	12.5	31.9	13 (1) 19 (2) 25 (3)			●	●	●	●
38 / (8)	8	14	37.9	19 (2) 25 (3) 30 (4)				●	●	●

*l_1=10 where P < 2.20

Ordering-code (example):

2 7 2 2 . 2 E 1 . 0 6 5 0 A

Angle:	0°	**Order code character** = (A)
Format: Square, length P	P = 6,5 mm	= 0650
Punch cutting length: l_1	13 mm	**Order No** = (1)
Length: l	80 mm	**Order code character** = (E)
Diameter: d_2	10 mm	**Order No** = (2)
Type:	light	**Order No** = (2)
Version:	Square	**Order No** = (2)
Punch:	with ejector pin	= 27

Material:

HSS
Hardness 62 ± 2 HRC

Execution:

Shaft and punch shape fine ground.
Special dimensions on request.

Ball lock punch, stepped, rectangular, with ejector pin, light duty



2732.

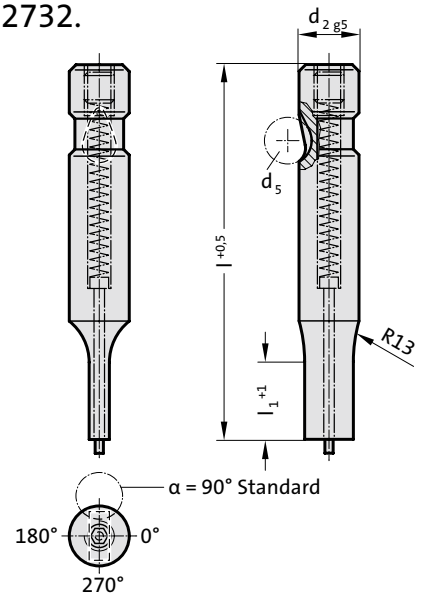

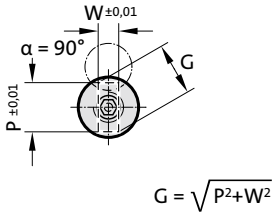

2732. Ball lock punch, stepped, rectangular, with ejector pin, light duty

d_2 / (Order No)	d_5	W_{min}	G_{max}	l_1 / (Order No)*	l / (Order Code character)	63 (C)	71 (D)	80 (E)	90 (F)	100 (G)
6 / (1)	6	1.6	5.9	13 (1)		●	●	●	●	●
10 / (2)	8	1.6	9.9	13 (1) 19 (2)		●	●	●	●	●
13 / (3)	8	4.5	12.9	13 (1) 19 (2)		●	●	●	●	●
16 / (4)	8	6	15.9	13 (1) 19 (2) 25 (3)		●	●	●	●	●
20 / (5)	8	8	19.9	13 (1) 19 (2) 25 (3)		●	●	●	●	●
25 / (6)	8	10	24.9	13 (1) 19 (2) 25 (3)		●	●	●	●	●
32 / (7)	8	12.5	31.9	13 (1) 19 (2) 25 (3)			●	●	●	●
38 / (8)	8	14	37.9	19 (2) 25 (3) 30 (4)				●	●	●

*l_1=10 where W < 2.20

Material:

HSS
Hardness 62 ± 2 HRC

Execution:

Shaft and punch shape fine ground.
Special dimensions on request.

Ordering-code (example):

2732.2F1.0650.0450B

Angle:	**Order code character**
90°	= (B)
Format: Rectangular, width W	
W = 4,5 mm	= 0450
Format: Rectangular, length P	
P = 6,5 mm	= 0650
Punch cutting length: l_1	**Order No**
13 mm	= (1)
Length: l	**Order code character**
90 mm	= (F)
Diameter: d_2	**Order No**
10 mm	= (2)
Type:	**Order No**
light	= (2)
Version:	**Order No**
Rectangular	= (3)
Punch:	
with ejector pin	= 27

subject to alterations

Ball lock punch, stepped, slot, with ejector pin, light duty

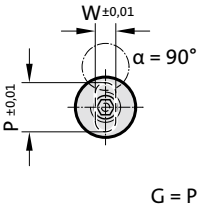

2742.

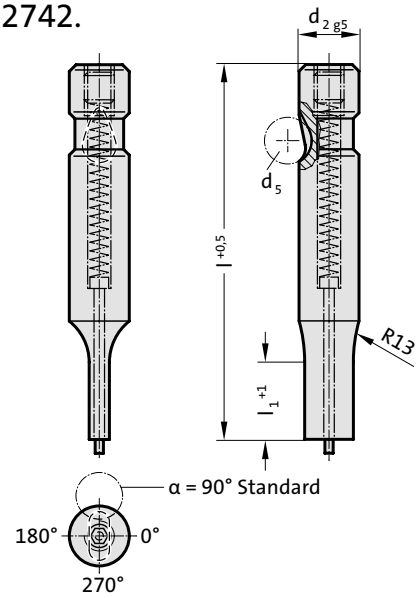



2742. Ball lock punch, stepped, slot, with ejector pin, light duty

d_2 / (Order No)	d_5	W_{min}	G_{max}	l_1 / (Order No)*	l / (Order Code character)	63 (C)	71 (D)	80 (E)	90 (F)	100 (G)
6 / (1)	6	1.6	5.9	13 (1)		●	●	●	●	●
10 / (2)	8	1.6	9.9	13 (1) 19 (2)		●	●	●	●	●
13 / (3)	8	4.5	12.9	13 (1) 19 (2)		●	●	●	●	●
16 / (4)	8	6	15.9	13 (1) 19 (2) 25 (3)		●	●	●	●	●
20 / (5)	8	8	19.9	13 (1) 19 (2) 25 (3)		●	●	●	●	●
25 / (6)	8	10	24.9	13 (1) 19 (2) 25 (3)		●	●	●	●	●
32 / (7)	8	12.5	31.9	13 (1) 19 (2) 25 (3)			●	●	●	●
38 / (8)	8	14	37.9	19 (2) 25 (3) 30 (4)				●	●	●

*l_1=10 where W < 2.20

Ordering-code (example):

2 7 4 2 . 2 F 1 . 0 6 5 0 . 0 4 5 0 B

Angle		**Order code character**
90°		= (B)
Format: Slot, width W		
W = 4,5 mm		= 0450
Format: Slot, length P		
P = 6,5 mm		= 0650
Punch cutting length: l_1		**Order No**
13 mm		= (1)
Length: l		**Order code character**
90 mm		= (F)
Diameter: d_2		**Order No**
10 mm		= (2)
Type:		**Order No**
light		= (2)
Version:		**Order No**
Slot		= (4)
Punch:		
with ejector pin		= 27

Material:

HSS
Hardness 62 ± 2 HRC

Execution:

Shaft and punch shape fine ground.
Special dimensions on request.

Ball lock punch, stepped, rectangle with radiussed corners, with ejector pin, light duty



2752.

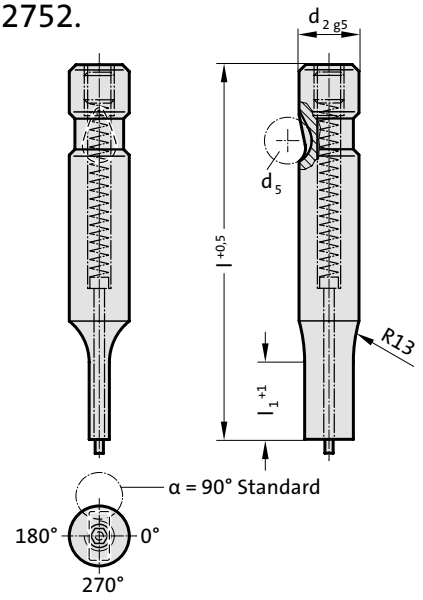

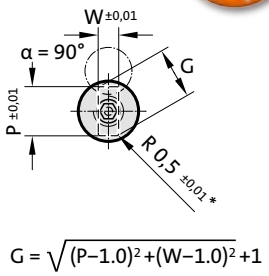

$$G = \sqrt{(P-1.0)^2+(W-1.0)^2}+1$$

2752. Ball lock punch, stepped, rectangle with radiussed corners, with ejector pin, light duty

d_2 / (Order No)	d_5	W_{min}	G_{max}	l_1 / (Order No)*	l / (Order Code character)	63 (C)	71 (D)	80 (E)	90 (F)	100 (G)
6 / (1)	6	1.6	5.9	13 (1)		●	●	●	●	●
10 / (2)	8	1.6	9.9	13 (1) 19 (2)		●	●	●	●	●
13 / (3)	8	4.5	12.9	13 (1) 19 (2)		●	●	●	●	●
16 / (4)	8	6	15.9	13 (1) 19 (2) 25 (3)		●	●	●	●	●
20 / (5)	8	8	19.9	13 (1) 19 (2) 25 (3)		●	●	●	●	●
25 / (6)	8	10	24.9	13 (1) 19 (2) 25 (3)		●	●	●	●	●
32 / (7)	8	12.5	31.9	13 (1) 19 (2) 25 (3)			●	●	●	●
38 / (8)	8	14	37.9	19 (2) 25 (3) 30 (4)				●	●	●

*l_1=10 where W < 2.20

Material:

HSS
Hardness 62 ± 2 HRC

Execution:

Shaft and punch shape fine ground.
Special dimensions on request.
* For other radius options, see standardised special shapes.

Ordering-code (example):

2752.2F1.0650.0450B

Angle:		**Order code character**
90°		= (B)
Format: Rectangle with radiused corners, width W		
W = 4,5 mm		= 0450
Format: Rectangle with radiused corners, length P		
P = 6,5 mm		= 0650
Punch cutting length: l_1		**Order No**
13 mm		= (1)
Length: l		**Order code character**
90 mm		= (F)
Diameter: d_2		**Order No**
10 mm		= (2)
Type:		**Order No**
light		= (2)
Version:		**Order No**
Rectangle with radiused corners		= (5)
Punch:		
with ejector pin		= 27

subject to alterations

Ball lock punch, punch larger than shaft, blank, light duty

2204.

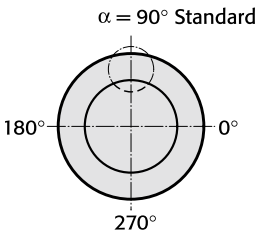

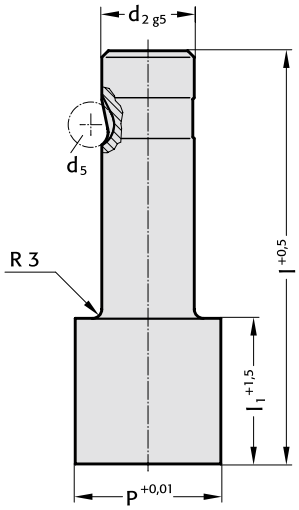



2204. Ball lock punch, punch larger than shaft, blank, light duty

d_2 / (Order No)	d_5	P	l_1 / (Order No)	l / (Order Code character)	80 (E)	90 (F)	100 (G)
13 / (3)	8	32	19 (2) 30 (4)		●	●	●
16 / (4)	8	38	19 (2) 30 (4)		●	●	●
20 / (5)	8	40	19 (2) 30 (4)		●	●	●
25 / (6)	8	44	19 (2) 30 (4)		●	●	●
32 / (7)	8	50	19 (2) 30 (4)		●	●	●

Ordering-code (example):

2 2 0 4 . 4 F 4 . 3 8 0 0

Format: Round	
P = ø38,0 mm	= 3800
Punch cutting length: l_1	**Order No**
30 mm	= (4)
length: l	**Order code character**
90 mm	= (F)
diameter: d_2	**Order No**
16 mm	= (4)
Type:	**Order No**
punch larger, light duty	= (4)
Version:	**Order No**
Blank	= (0)
Punch:	
without ejector pin	= 22

Material:

HSS
Hardness 62 ± 2 HRC

Execution:

Shaft and punch diameter fine ground.
Special dimensions on request.

Ball lock punch, punch larger than shaft, round, light duty



2214.

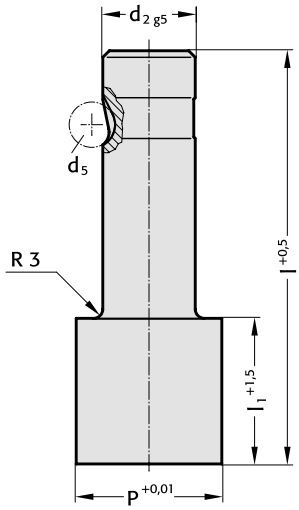

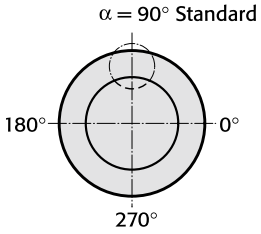

2214. Ball lock punch, punch larger than shaft, round, light duty

d_2 / (Order No)	d_5	P	l_1 / (Order No)	l / (Order Code character)	80 (E)	90 (F)	100 (G)
13 / (3)	8	13 - 32	19 (2) 30 (4)		●	●	●
16 / (4)	8	16 - 38	19 (2) 30 (4)		●	●	●
20 / (5)	8	20 - 40	19 (2) 30 (4)		●	●	●
25 / (6)	8	25 - 44	19 (2) 30 (4)		●	●	●
32 / (7)	8	32 - 50	19 (2) 30 (4)		●	●	●

Material:

HSS
Hardness 62 ± 2 HRC

Execution:

Shaft and punch diameter fine ground.
Special dimensions on request.

Ordering-code (example):

2 2 1 4 . 7 G 2 . 3 8 0 0

Format: Round	
P = ∅ 38,0 mm	= 3800
Punch cutting length: l_1	**Order No**
19 mm	= (2)
length: l	**Order code character**
100 mm	= (G)
diameter: d_2	**Order No**
32 mm	= (7)
Type:	**Order No**
punch larger, light duty	= (4)
Version:	**Order No**
Round	= (1)
Punch:	
without ejector pin	= 22

subject to alterations

Ball lock punch, punch larger than shaft, square, light duty

2224.

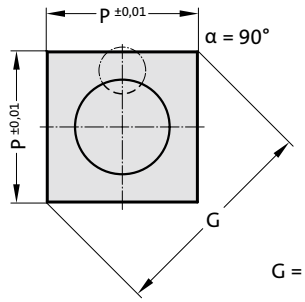

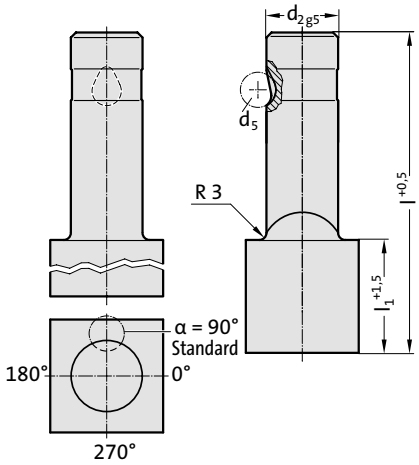



2224. Ball lock punch, punch larger than shaft, square, light duty

d_2 / (Order No)	d_5	P_{min}	G_{max}	l_1 / (Order No)	l / (Order Code character)	80 (E)	90 (F)	100 (G)
13 / (3)	8	9.19	32	19 (2)	30 (4)	●	●	●
16 / (4)	8	11.31	38	19 (2)	30 (4)	●	●	●
20 / (5)	8	14.14	40	19 (2)	30 (4)	●	●	●
25 / (6)	8	17.68	44	19 (2)	30 (4)	●	●	●
32 / (7)	8	22.63	50	19 (2)	30 (4)	●	●	●

Ordering-code (example):

2 2 2 4 . 7 F 2 . 3 5 3 5 A

Angle:	0°	**Order code character** = (A)
Format: Square, length P	P = 35,35 mm	= 3535
Punch cutting length: l_1	19 mm	**Order No** = (2)
Length: l	90 mm	**Order code character** = (F)
Diameter: d_2	32 mm	**Order No** = (7)
Type:	punch larger, light duty	**Order No** = (4)
Version:	Square	**Order No** = (2)
Punch:	without ejector pin	= 22

Material:

HSS
Hardness 62 ± 2 HRC

Execution:

Shaft and punch shape fine ground.
Special dimensions on request.

Ball lock punch, punch larger than shaft, rectangular, light duty



2234.

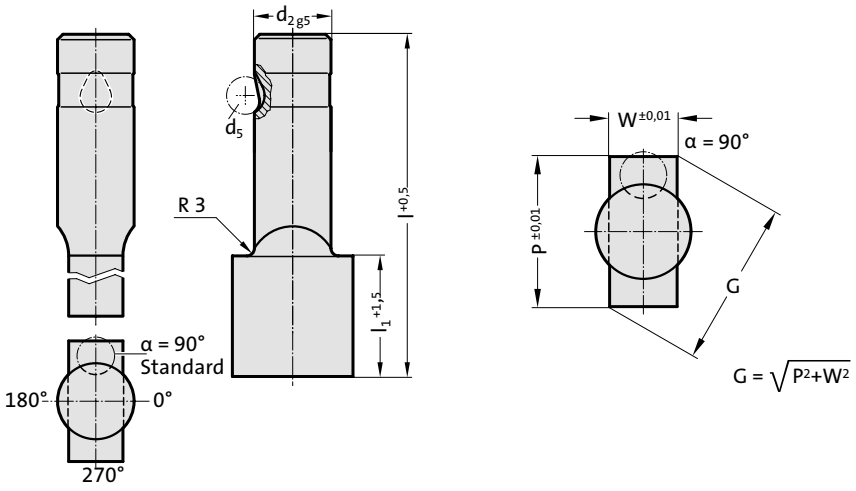

2234. Ball lock punch, punch larger than shaft, rectangular, light duty

d_2 / (Order No)	d_5	W_{min}	G_{max}	l_1 / (Order No)	l / (Order Code character)	80 (E)	90 (F)	100 (G)
13 / (3)	8	5	32	19 (2) 30 (4)		●	●	●
16 / (4)	8	6.5	38	19 (2) 30 (4)		●	●	●
20 / (5)	8	8	40	19 (2) 30 (4)		●	●	●
25 / (6)	8	10	44	19 (2) 30 (4)		●	●	●
32 / (7)	8	11.5	50	19 (2) 30 (4)		●	●	●

Material:

HSS
Hardness 62 ± 2 HRC

Execution:

Shaft and punch shape fine ground.
Special dimensions on request.

Ordering-code (example):

2 2 3 4 . 7 F 2 . 3 8 0 0 . 1 1 5 0 B

Angle:	**Order code character**
90°	= (B)
Format: Rectangular, width W	
W = 11,5 mm	= 1150
Format: Rectangular, length P	
P = 38 mm	= 3800
Punch cutting length: l_1	**Order No**
19 mm	= (2)
Length: l	**Order code character**
90 mm	= (F)
Diameter: d_2	**Order No**
32 mm	= (7)
Type:	**Order No**
punch larger, light duty	= (4)
Version:	**Order No**
Rectangular	= (3)
Punch:	
without ejector pin	= 22

subject to alterations

Ball lock punch, punch larger than shaft, slot, light duty

2244.

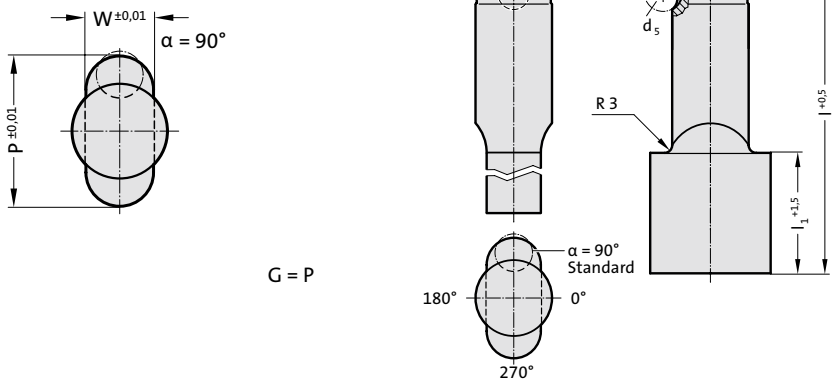



2244. Ball lock punch, punch larger than shaft, slot, light duty

d_2 / (Order No)	d_5	W_{min}	G_{max}	l_1 / (Order No)	l / (Order Code character)	80 (E)	90 (F)	100 (G)
13 / (3)	8	5	32	19 (2) 30 (4)		●	●	●
16 / (4)	8	6.5	38	19 (2) 30 (4)		●	●	●
20 / (5)	8	8	40	19 (2) 30 (4)		●	●	●
25 / (6)	8	10	44	19 (2) 30 (4)		●	●	●
32 / (7)	8	11.5	50	19 (2) 30 (4)		●	●	●

Ordering-code (example):

2 2 4 4 . 4 F 2 . 3 8 0 0 . 0 6 5 0 B

	Angle	**Order code character**
	90°	= (B)
	Format: Slot, width W	
	W = 6,5 mm	= 0650
	Format: Slot, length P	
	P = 38,0 mm	= 3800
	Punch cutting length: l_1	**Order No**
	19 mm	= (2)
	Length: l	**Order code character**
	90 mm	= (F)
	Diameter: d_2	**Order No**
	16 mm	= (4)
	Type:	**Order No**
	punch larger, light duty	= (4)
	Version:	**Order No**
	Slot	= (4)
	Punch:	
	without ejector pin	= 22

Material:

HSS
Hardness 62 ± 2 HRC

Execution:

Shaft and punch shape fine ground.
Special dimensions on request.

FIBRO

Ball lock punch, punch larger than shaft, rectangle with radiussed corners, light duty



2254.

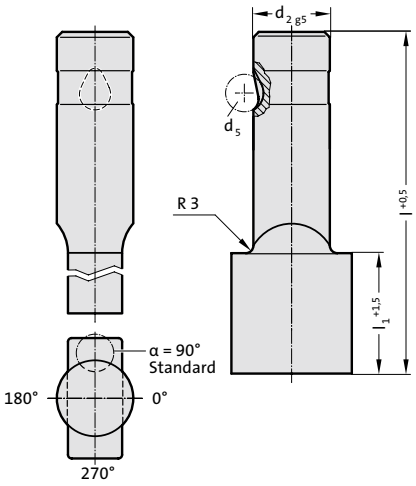

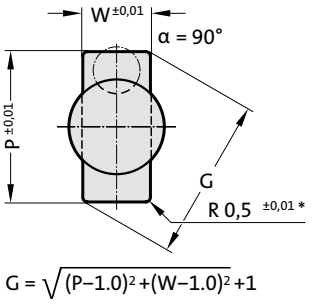

2254. Ball lock punch, punch larger than shaft, rectangle with radiussed corners, light duty

d_2 / (Order No)	d_5	W_{min}	G_{max}	l_1 / (Order No)	l / (Order Code character)	80 (E)	90 (F)	100 (G)
13 / (3)	8	5	32	19 (2) 30 (4)		●	●	●
16 / (4)	8	6.5	38	19 (2) 30 (4)		●	●	●
20 / (5)	8	8	40	19 (2) 30 (4)		●	●	●
25 / (6)	8	10	44	19 (2) 30 (4)		●	●	●
32 / (7)	8	11.5	50	19 (2) 30 (4)		●	●	●

Material:

HSS
Hardness 62 ± 2 HRC

Execution:

Shaft and punch shape fine ground.
Special dimensions on request.
* For other radius options, see standardised special shapes.

Ordering-code (example):

2254.7F2.3800.1150B

Angle:	**Order code character**
90°	= (B)
Format: Rectangle with radiused corners, width W	
W = 11,5 mm	= 1150
Format: Rectangle with radiused corners, length P	
P = 38,0 mm	= 3800
Punch cutting length: l_1	**Order No**
19 mm	= (2)
Length: l	**Order code character**
90 mm	= (F)
Diameter: d_2	**Order No**
32 mm	= (7)
Type:	**Order No**
punch larger, light duty	= (4)
Version:	**Order No**
Rectangle with radiused corners	= (5)
Punch:	
without ejector pin	= 22

subject to alterations

Ball lock punch, punch larger than shaft, blank, with ejector pin, light duty

2704.

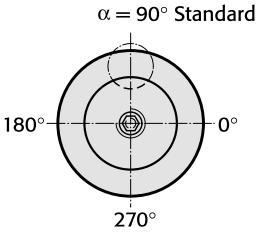

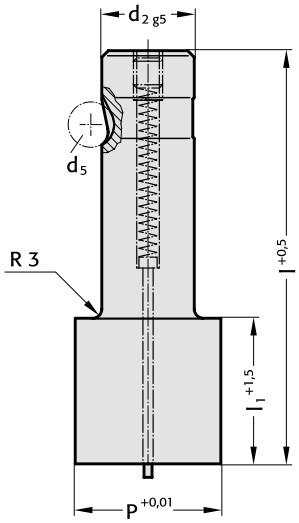



2704. Ball lock punch, punch larger than shaft, blank, with ejector pin, light duty

d_2 / (Order No)	d_5	P	l_1 / (Order No)	l / (Order Code character)	80 (E)	90 (F)	100 (G)
13 / (3)	8	32	19 (2) 30 (4)		●	●	●
16 / (4)	8	38	19 (2) 30 (4)		●	●	●
20 / (5)	8	40	19 (2) 30 (4)		●	●	●
25 / (6)	8	44	19 (2) 30 (4)		●	●	●
32 / (7)	8	50	19 (2) 30 (4)		●	●	●

Ordering-code (example):

2 7 0 4 . 4 F 4 . 3 8 0 0

Format: Round	
P = ø38,0 mm	= 3800
Punch cutting length: l_1	**Order No**
30 mm	= (4)
length: l	**Order code character**
90 mm	= (F)
diameter: d_2	**Order No**
16 mm	= (4)
Type:	**Order No**
punch larger, light duty	= (4)
Version:	**Order No**
Blank	= (0)
Punch:	
with ejector pin	= 27

Material:

HSS
Hardness 62 ± 2 HRC

Execution:

Shaft and punch diameter fine ground.
Special dimensions on request.

Ball lock punch, punch larger than shaft, round, with ejector pin, light duty



2714.

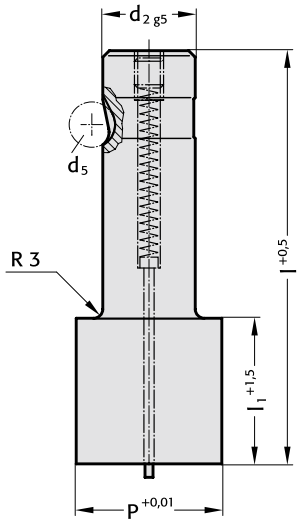

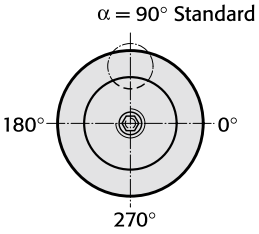

2714. Ball lock punch, punch larger than shaft, round, with ejector pin, light duty

d_2 / (Order No)	d_5	P	l_1 / (Order No)	l / (Order Code character)	80 (E)	90 (F)	100 (G)
13 / (3)	8	13 - 32	19 (2) 30 (4)		●	●	●
16 / (4)	8	16 - 38	19 (2) 30 (4)		●	●	●
20 / (5)	8	20 - 40	19 (2) 30 (4)		●	●	●
25 / (6)	8	25 - 44	19 (2) 30 (4)		●	●	●
32 / (7)	8	32 - 50	19 (2) 30 (4)		●	●	●

Material:

HSS
Hardness 62 ± 2 HRC

Execution:

Shaft and punch diameter fine ground.
Special dimensions on request.

Ordering-code (example):

2 7 1 4 . 7 G 2 . 4 2 5 0

Format: Round	
P = Ø 42,5 mm	= 4250
Punch cutting length: l_1	**Order No**
19 mm	= (2)
length: l	**Order code character**
100 mm	= (G)
diameter: d_2	**Order No**
32 mm	= (7)
Type:	**Order No**
punch larger, light duty	= (4)
Version:	**Order No**
Round	= (1)
Punch:	
with ejector pin	= 27

subject to alterations

Ball lock punch, punch larger than shaft, square, with ejector pin, light duty



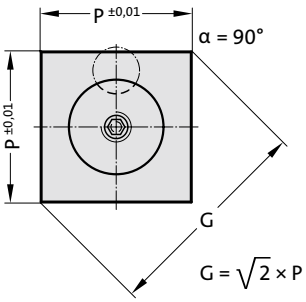

2724.

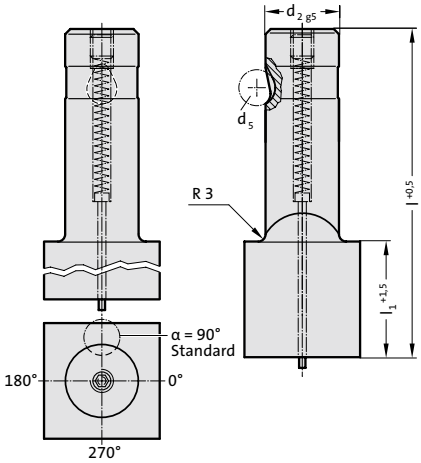



2724. Ball lock punch, punch larger than shaft, square, with ejector pin, light duty

d_2 / (Order No)	d_5	P_{min}	G_{max}	l_1 / (Order No)	l / (Order Code character)	80 (E)	90 (F)	100 (G)
13 / (3)	8	9.19	32	19 (2) 30 (4)		●	●	●
16 / (4)	8	11.31	38	19 (2) 30 (4)		●	●	●
20 / (5)	8	14.14	40	19 (2) 30 (4)		●	●	●
25 / (6)	8	17.68	44	19 (2) 30 (4)		●	●	●
32 / (7)	8	22.63	50	19 (2) 30 (4)		●	●	●

Ordering-code (example):

2 7 2 4 . 5 E 2 . 2 8 2 8 A

Angle:		**Order code character**
0°		= (A)
Format: Square, length P		
P = 28,28 mm		= 2828
Punch cutting length: l_1		**Order No**
19 mm		= (2)
Length: l		**Order code character**
80 mm		= (E)
Diameter: d_2		**Order No**
20 mm		= (5)
Type:		**Order No**
punch larger, light duty		= (4)
Version:		**Order No**
Square		= (2)
Punch:		
with ejector pin		= 27

Material:

HSS
Hardness 62 ± 2 HRC

Execution:

Shaft and punch shape fine ground.
Special dimensions on request.

Ball lock punch, punch larger than shaft, rectangular, with ejector pin, light duty



2734.

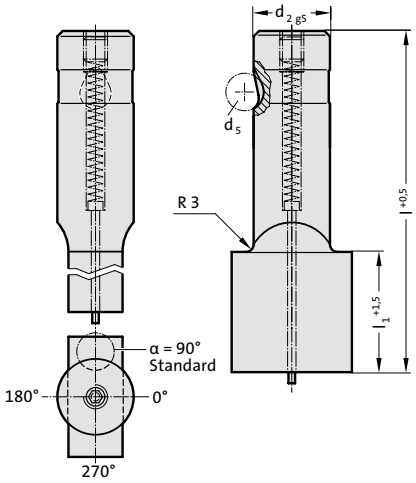

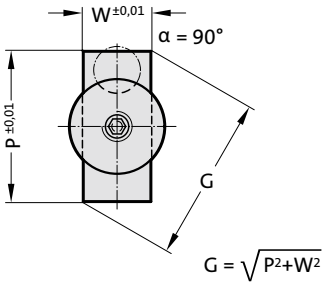

2734. Ball lock punch, punch larger than shaft, rectangular, with ejector pin, light duty

d_2 / (Order No)	d_5	W_{min}	G_{max}	l_1 / (Order No)	l / (Order Code character)	80 (E)	90 (F)	100 (G)
13 / (3)	8	5	32	19 (2) 30 (4)		●	●	●
16 / (4)	8	6.5	38	19 (2) 30 (4)		●	●	●
20 / (5)	8	8	40	19 (2) 30 (4)		●	●	●
25 / (6)	8	10	44	19 (2) 30 (4)		●	●	●
32 / (7)	8	11.5	50	19 (2) 30 (4)		●	●	●

Material:

HSS
Hardness 62 ± 2 HRC

Execution:

Shaft and punch shape fine ground.
Special dimensions on request.

Ordering-code (example):

2734.7F2.3800.1150B

Angle:	**Order code character**
90°	= (B)
Format: Rectangular, width W	
W = 11,5 mm	= 1150
Format: Rectangular, length P	
P = 38 mm	= 3800
Punch cutting length: l_1	**Order No**
19 mm	= (2)
Length: l	**Order code character**
90 mm	= (F)
Diameter: d_2	**Order No**
32 mm	= (7)
Type:	**Order No**
punch larger, light duty	= (4)
Version:	**Order No**
Rectangular	= (3)
Punch:	
with ejector pin	= 27

subject to alterations

Ball lock punch, punch larger than shaft, slot, with ejector pin, light duty

2744.

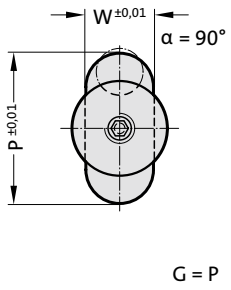

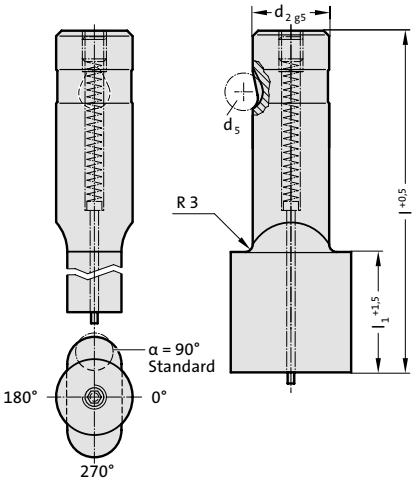



2744. Ball lock punch, punch larger than shaft, slot, with ejector pin, light duty

d_2 / (Order No)	d_5	W_{min}	G_{max}	l_1 / (Order No)	l / (Order Code character)	80 (E)	90 (F)	100 (G)
13 / (3)	8	5	32	19 (2) 30 (4)		●	●	●
16 / (4)	8	6.5	38	19 (2) 30 (4)		●	●	●
20 / (5)	8	8	40	19 (2) 30 (4)		●	●	●
25 / (6)	8	10	44	19 (2) 30 (4)		●	●	●
32 / (7)	8	11.5	50	19 (2) 30 (4)		●	●	●

Ordering-code (example):

2 7 4 4 . 7 F 2 . 3 8 0 0 . 1 1 5 0 B

	Angle	**Order code character**
	90°	= (B)
	Format: Slot, width W	
	W = 11,5 mm	= 1150
	Format: Slot, length P	
	P = 38,0 mm	= 3800
	Punch cutting length: l_1	**Order No**
	19 mm	= (2)
	Length: l	**Order code character**
	90 mm	= (F)
	Diameter: d_2	**Order No**
	32 mm	= (7)
	Type:	**Order No**
	punch larger, light duty	= (4)
	Version:	**Order No**
	Slot	= (4)
	Punch:	
	with ejector pin	= 27

Material:

HSS
Hardness 62 ± 2 HRC

Execution:

Shaft and punch shape fine ground.
Special dimensions on request.

Ball lock punch, punch larger than shaft, rectangle with radiussed corners, with ejector pin, light duty



2754.

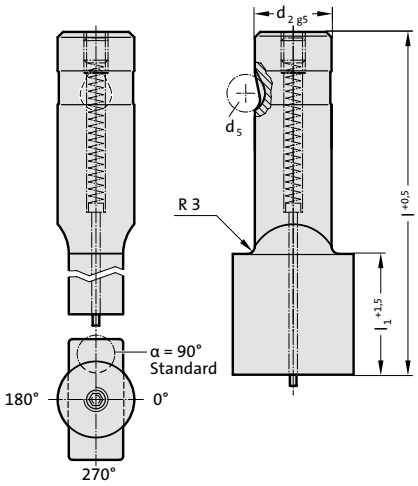

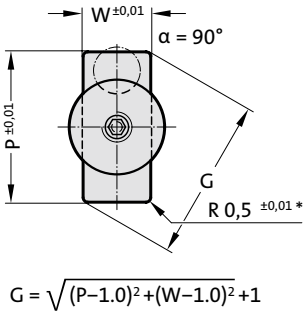

2754. Ball lock punch, punch larger than shaft, rectangle with radiussed corners, with ejector pin, light duty

d_2 / (Order No)	d_5	W_{min}	G_{max}	l_1 / (Order No)	l / (Order Code character)	80 (E)	90 (F)	100 (G)
13 / (3)	8	5	32	19 (2) 30 (4)		●	●	●
16 / (4)	8	6.5	38	19 (2) 30 (4)		●	●	●
20 / (5)	8	8	40	19 (2) 30 (4)		●	●	●
25 / (6)	8	10	44	19 (2) 30 (4)		●	●	●
32 / (7)	8	11.5	50	19 (2) 30 (4)		●	●	●

Material:

HSS
Hardness 62 ± 2 HRC

Execution:

Shaft and punch shape fine ground.
Special dimensions on request.
* For other radius options, see standardised special shapes.

Ordering-code (example):

2754.7F2.3800.1150B

Angle:	**Order code character**
90°	= (B)
Format: Rectangle with radiused corners, width W	
W = 11,5 mm	= 1150
Format: Rectangle with radiused corners, length P	
P = 38,0 mm	= 3800
Punch cutting length: l_1	**Order No**
19 mm	= (2)
Length: l	**Order code character**
90 mm	= (F)
Diameter: d_2	**Order No**
32 mm	= (7)
Type:	**Order No**
punch larger, light duty	= (4)
Version:	**Order No**
Rectangle with radiused corners	= (5)
Punch:	
with ejector pin	= 27

subject to alterations

Ball lock pilot pin, with tapered tip, light duty

2262.

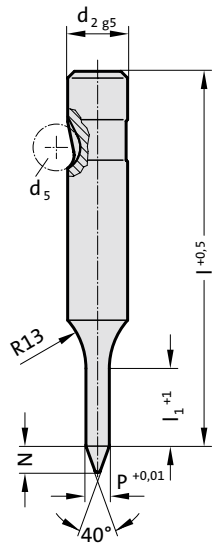



2262. Ball lock pilot pin, with tapered tip, light duty

d_2 / (Order No)	d_5	P	l_1 / (Order No)	N	l / (Order Code character)	71 (D)	80 (E)	90 (F)	100 (G)	110 (H)	125 (J)	140 (K)	150 (l)
10 / (2)	8	5.9 - 9.9	19 (2)	8		●	●	●	●	●			
13 / (3)	8	9.9 - 12.9	19 (2)	10		●	●	●	●	●	●	●	
16 / (4)	8	12.9 - 15.9	25 (3)	15		●	●	●	●	●	●	●	●
20 / (5)	8	15.9 - 19.9	25 (3)	20		●	●	●	●	●	●	●	●
25 / (6)	8	19.9 - 24.9	25 (3)	25		●	●	●	●	●	●	●	●
32 / (7)	8	24.9 - 31.9	25 (3)	30			●	●	●	●	●	●	●
38 / (8)	8	31.9 - 37.9	30 (4)	35			●	●	●	●	●	●	●

Ordering-code (example):

2 2 6 2 . 4 G 3 . 1 4 0 0

Format: Round		
P = Ø 14,0 mm		= 1400
Punch cutting length: l_1		**Order No**
25 mm		= (3)
Length: l		**Order code character**
100 mm		= (G)
Diameter: d_2		**Order No**
16 mm		= (4)
Type:		**Order No**
light		= (2)
Version:		**Order No**
Pilot pin with tapered tip		= (6)
Punch:		
without ejector pin		= 22

Material:

HSS
Hardness 62 ± 2 HRC

Execution:

Shaft and pilot pin fine ground.
Special dimensions on request.

Ball lock pilot pin, with parabolic tip, light duty



2272.

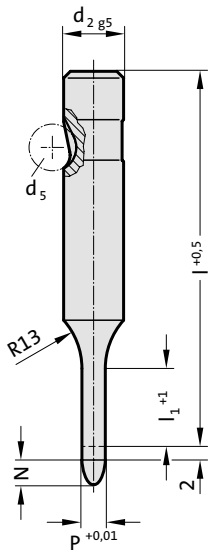

2272. Ball lock pilot pin, with parabolic tip, light duty

d_2 / (Order No)	d_5	P	l_1 / (Order No)	l / (Order Code character)	50 (A)	56 (B)	63 (C)	71 (D)	80 (E)	90 (F)	100 (G)
6 / (1)	6	2,9-5,9	13 (1)		●	●	●	●	●	●	●
10 / (2)	8	5,9-9,9	19 (2)		●	●	●	●	●	●	●
13 / (3)	8	9,9-12,9	19 (2)		●	●	●	●	●	●	●
16 / (4)	8	12,9-15,9	25 (3)				●	●	●	●	●
20 / (5)	8	15,9-19,9	25 (3)				●	●	●	●	●
25 / (6)	8	19,9-24,9	25 (3)				●	●	●	●	●
32 / (7)	8	24,9-31,9	25 (3)					●	●	●	●
38 / (8)	8	31,9-37,9	30 (4)						●	●	●

Material:

HSS
Hardness 62 ± 2 HRC

Execution:

Shaft and pilot pin fine ground.
Special dimensions on request.

Note:

The 2 mm length provides full guidance before the blanking punch contacts the sheet metal.

Length of parabolic tip N:
= 8 mm where P ≤ 10 mm
=12 mm where P 10,1 mm - 15 mm
=15 mm where P > 15 mm

Ordering-code (example):

2 2 7 2 . 4 G 3 . 1 4 0 0

Format: Round	
P = ∅ 14,0 mm	= 1400
Punch cutting length: l_1	**Order No**
25 mm	= (3)
Length: l	**Order code character**
100 mm	= (G)
Diameter: d_2	**Order No**
16 mm	= (4)
Type:	**Order No**
light	= (2)
Version:	**Order No**
Pilot pin with parabolic tip	= (7)
Punch:	
without ejector pin	= 22

subject to alterations

Ball lock punch, blank, heavy duty

2203.

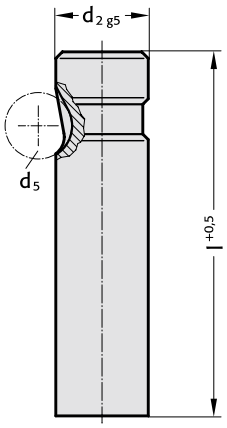



2203. Ball lock punch, blank, heavy duty

d_2 / (Order No)	d_5	l / (Order Code character)	63 (C)	71 (D)	80 (E)	90 (F)	100 (G)	110 (H)	125 (J)	140 (K)	150 (l)	175 (M)	200 (N)
10 / (2)	10		●	●	●	●	●	●	●				
13 / (3)	12		●	●	●	●	●	●	●	●	●	●	
16 / (4)	12		●	●	●	●	●	●	●	●	●	●	
20 / (5)	12		●	●	●	●	●	●	●	●	●	●	
25 / (6)	12			●	●	●	●	●	●	●	●	●	●
32 / (7)	12			●	●	●	●	●	●	●	●	●	●
40 / (9)	12				●	●	●	●	●	●	●	●	●

Ordering code (example):

2 2 0 3 . 7 G

Length: l	**Order Code character**
100 mm	= (G)
Diameter: d_2	**Order No**
32 mm	= (7)
Type:	**Order No**
heavy duty	= (3)
Version:	**Order No**
blank	= (0)
Punch:	
without ejector pin	= 22

Material:

HSS
Hardness 62 ± 2 HRC

Execution:

Shaft fine ground.
Special dimensions on request.

Ball lock punch, stepped, round, heavy duty



2213.

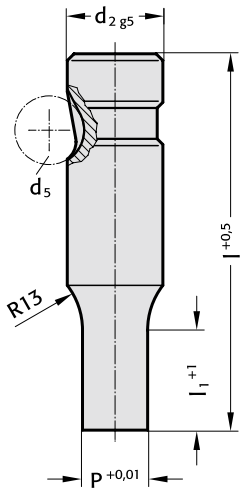

2213. Ball lock punch, stepped, round, heavy duty

d_2 / (Order No)	d_5	P	l_1 / (Order No)*	l / (Order Code character)	63 (C)	71 (D)	80 (E)	90 (F)	100 (G)	110 (H)	125 (J)
10 / (2)	10	1.6 - 9.9	13 (1) 19 (2)		●	●	●	●	●	●	●
13 / (3)	12	5 - 12.9	13 (1) 19 (2)		●	●	●	●	●	●	●
16 / (4)	12	8 - 15.9	13 (1) 19 (2) 25 (3)		●	●	●	●	●	●	●
20 / (5)	12	12 - 19.9	13 (1) 19 (2) 25 (3)		●	●	●	●	●	●	●
25 / (6)	12	16 - 24.9	13 (1) 19 (2) 25 (3)			●	●	●	●	●	●
32 / (7)	12	24 - 31.9	13 (1) 19 (2) 25 (3)			●	●	●	●	●	●
40 / (9)	12	30 - 39.9	19 (2) 25 (3) 30 (4)				●	●	●	●	●

*l_1=10 where P < 2.20

Material:

HSS
Hardness 62 ± 2 HRC

Execution:

Shaft and punch diameter fine ground.
Special dimensions on request.

Ordering-code (example):

2 2 1 3 . 7 G 2 . 2 4 5 0

Format: Round	
P = ø24,5 mm	= 2450
Punch cutting length: l_1	**Order No**
19 mm	= (2)
length: l	**Order code character**
100 mm	= (G)
diameter: d_2	**Order No**
32 mm	= (7)
Type:	**Order No**
heavy duty	= (3)
Version:	**Order No**
Round	= (1)
Punch:	
without ejector pin	= 22

subject to alterations

Ball lock punch, stepped, square, heavy duty

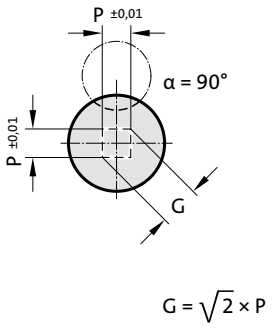

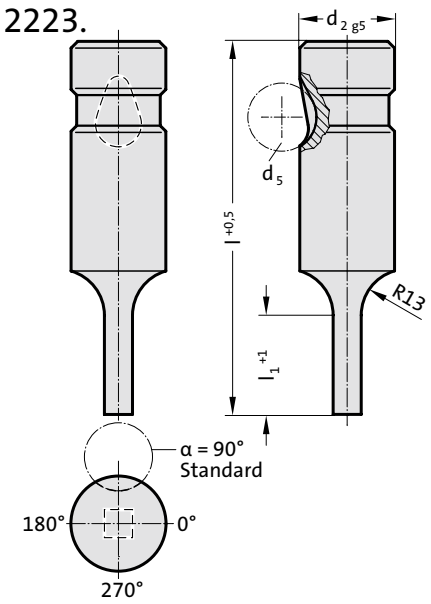



2223. Ball lock punch, stepped, square, heavy duty

d_2 / (Order No)	d_5	P_{min}	G_{max}	l_1 / (Order No)*	l / (Order Code character)	63 (C)	71 (D)	80 (E)	90 (F)	100 (G)	110 (H)	125 (J)
10 / (2)	10	1.6	9.9	13 (1) 19 (2)		●	●	●	●	●	●	●
13 / (3)	12	4.5	12.9	13 (1) 19 (2)		●	●	●	●	●	●	●
16 / (4)	12	6	15.9	13 (1) 19 (2) 25 (3)		●	●	●	●	●	●	●
20 / (5)	12	8	19.9	13 (1) 19 (2) 25 (3)		●	●	●	●	●	●	●
25 / (6)	12	10	24.9	13 (1) 19 (2) 25 (3)			●	●	●	●	●	●
32 / (7)	12	12.5	31.9	13 (1) 19 (2) 25 (3)			●	●	●	●	●	●
40 / (9)	12	14	39.9	19 (2) 25 (3) 30 (4)				●	●	●	●	●

*l_1=10 where P < 2.20

Ordering-code (example):

2 2 2 3 . 3 F 1 . 0 6 0 0 B

Angle:		**Order code character**
90°		= (B)
Format: Square, length P		
P = 6,0 mm		= 0600
Punch cutting length: l_1		**Order No**
13 mm		= (1)
Length: l		**Order code character**
90 mm		= (F)
Diameter: d_2		**Order No**
13 mm		= (3)
Type:		**Order No**
heavy duty		= (3)
Version:		**Order No**
Square		= (2)
Punch:		
without ejector pin		= 22

Material:

HSS
Hardness 62 ± 2 HRC

Execution:

Shaft and punch shape fine ground.
Special dimensions on request.

Ball lock punch, stepped, rectangular, heavy duty



2233.

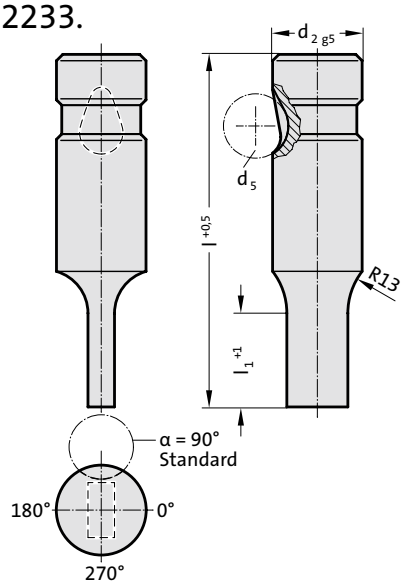

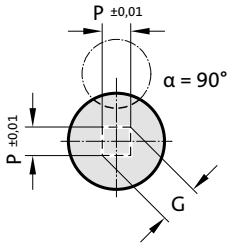

$G = \sqrt{2} \times P$

2233. Ball lock punch, stepped, rectangular, heavy duty

d_2 / (Order No)	d_5	W_{min}	G_{max}	l_1 / (Order No)*	l / (Order Code character)	63 (C)	71 (D)	80 (E)	90 (F)	100 (G)	110 (H)	125 (J)
10 / (2)	10	1.6	9.9	13 (1) 19 (2)		●	●	●	●	●	●	●
13 / (3)	12	4.5	12.9	13 (1) 19 (2)		●	●	●	●	●	●	●
16 / (4)	12	6	15.9	13 (1) 19 (2) 25 (3)		●	●	●	●	●	●	●
20 / (5)	12	8	19.9	13 (1) 19 (2) 25 (3)		●	●	●	●	●	●	●
25 / (6)	12	10	24.9	13 (1) 19 (2) 25 (3)			●	●	●	●	●	●
32 / (7)	12	12.5	31.9	13 (1) 19 (2) 25 (3)			●	●	●	●	●	●
40 / (9)	12	14	39.9	19 (2) 25 (3) 30 (4)				●	●	●	●	●

*l_1=10 where W < 2.20

Material:

HSS
Hardness 62 ± 2 HRC

Execution:

Shaft and punch shape fine ground.
Special dimensions on request.

Ordering-code (example):

2 2 3 3 . 2 F 1 . 0 6 5 0 . 0 4 5 0 B

Angle:	**Order code character**
90°	= (B)
Format: Rectangular, width W	
W = 4,5 mm	= 0450
Format: Rectangular, length P	
P = 6,5 mm	= 0650
Punch cutting length: l_1	**Order No**
13 mm	= (1)
Length: l	**Order code character**
90 mm	= (F)
Diameter: d_2	**Order No**
10 mm	= (2)
Type:	**Order No**
heavy duty	= (3)
Version:	**Order No**
Rectangular	= (3)
Punch:	
without ejector pin	= 22

subject to alterations

Ball lock punch, stepped, slot, heavy duty

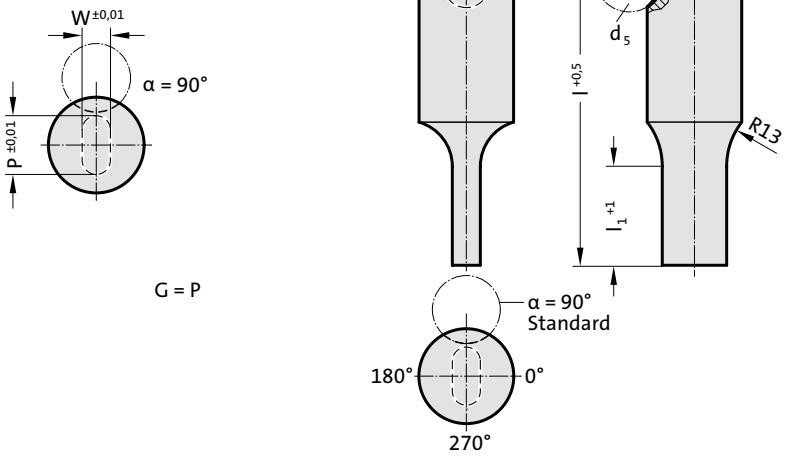



2243. Ball lock punch, stepped, slot, heavy duty

d_2 / (Order No)	W_{min}	G_{max}	l_1 / (Order No)*	l / (Order Code character)	63 (C)	71 (D)	80 (E)	90 (F)	100 (G)	110 (H)	125 (J)
10 / (2)	1.6	9.9	13 (1) 19 (2)		●	●	●	●	●	●	●
13 / (3)	4.5	12.9	13 (1) 19 (2)		●	●	●	●	●	●	●
16 / (4)	6	15.9	13 (1) 19 (2) 25 (3)		●	●	●	●	●	●	●
20 / (5)	8	19.9	13 (1) 19 (2) 25 (3)		●	●	●	●	●	●	●
25 / (6)	10	24.9	13 (1) 19 (2) 25 (3)			●	●	●	●	●	●
32 / (7)	12.5	31.9	13 (1) 19 (2) 25 (3)			●	●	●	●	●	●
40 / (9)	14	39.9	19 (2) 25 (3) 30 (4)				●	●	●	●	●

*l_1=10 where W < 2.20

Ordering-code (example):

2 2 4 3 . 3 E 2 . 1 2 1 5 . 0 9 1 5 B

	Angle	**Order code character**
90°		= (B)
	Format: Slot, width W	
W = 9,15 mm		= 0915
	Format: Slot, length P	
P = 12,15 mm		= 1215
	Punch cutting length: l_1	**Order No**
19 mm		= (2)
	Length: l	**Order code character**
80 mm		= (E)
	Diameter: d_2	**Order No**
13 mm		= (3)
	Type:	**Order No**
heavy duty		= (3)
	Version:	**Order No**
Slot		= (4)
	Punch:	
without ejector pin		= 22

Material:

HSS
Hardness 62 ± 2 HRC

Execution:

Shaft and punch shape fine ground.
Special dimensions on request.

Ball lock punch, stepped, rectangle with radiussed corners, heavy duty



2253.

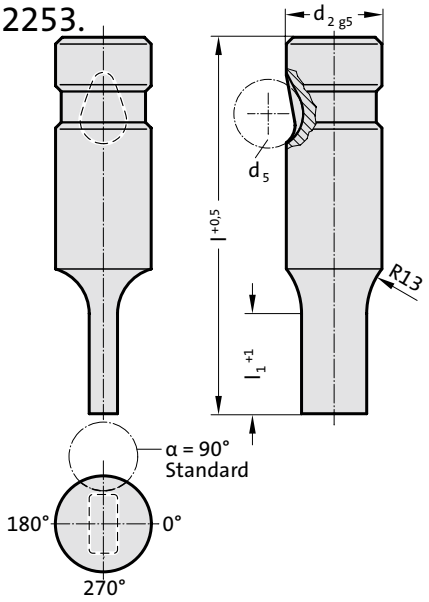

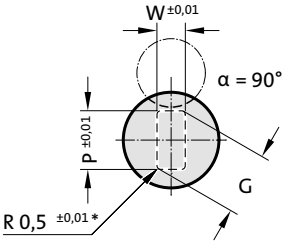

$$G = \sqrt{(P-1.0)^2+(W-1.0)^2}+1$$

2253. Ball lock punch, stepped, rectangle with radiussed corners, heavy duty

d_2 / (Order No)	W_{min}	G_{max}	l_1 / (Order No)*	l / (Order Code character)	63 (C)	71 (D)	80 (E)	90 (F)	100 (G)	110 (H)	125 (J)
10 / (2)	1.6	9.9	13 (1) 19 (2)		●	●	●	●	●	●	●
13 / (3)	4.5	12.9	13 (1) 19 (2)		●	●	●	●	●	●	●
16 / (4)	6	15.9	13 (1) 19 (2) 25 (3)		●	●	●	●	●	●	●
20 / (5)	8	19.9	13 (1) 19 (2) 25 (3)		●	●	●	●	●	●	●
25 / (6)	10	24.9	13 (1) 19 (2) 25 (3)			●	●	●	●	●	●
32 / (7)	12.5	31.9	13 (1) 19 (2) 25 (3)			●	●	●	●	●	●
40 / (9)	14	39.9	19 (2) 25 (3) 30 (4)				●	●	●	●	●

*l_1=10 where W < 2.20

Material:

HSS
Hardness 62 ± 2 HRC

Execution:

Shaft and punch shape fine ground.
Special dimensions on request.
* For other radius options, see standardised special shapes.

Ordering-code (example):

2 2 5 3 . 2 F 1 . 0 6 5 0 . 0 4 5 0 B

Angle:	**Order code character**
90°	= (B)
Format: Rectangle with radiused corners, width W	
W = 4,5 mm	= 0450
Format: Rectangle with radiused corners, length P	
P = 6,5 mm	= 0650
Punch cutting length: l_1	**Order No**
13 mm	= (1)
Length: l	**Order code character**
90 mm	= (F)
Diameter: d_2	**Order No**
10 mm	= (2)
Type:	**Order No**
heavy duty	= (3)
Version:	**Order No**
Rectangle with radiused corners	= (5)
Punch:	
without ejector pin	= 22

subject to alterations

Ball lock punch, blank, with ejector pin, heavy duty

2703.

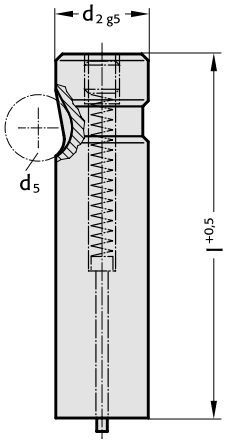



2703. Ball lock punch, blank, with ejector pin, heavy duty

d_2 / (Order No)	d_5	l / (Order Code character)	63 (C)	71 (D)	80 (E)	90 (F)	100 (G)	110 (H)	125 (J)
10 / (2)	10		●	●	●	●	●		
13 / (3)	12		●	●	●	●	●	●	●
16 / (4)	12		●	●	●	●	●	●	●
20 / (5)	12		●	●	●	●	●	●	●
25 / (6)	12			●	●	●	●	●	●
32 / (7)	12			●	●	●	●	●	●
40 / (9)	12				●	●	●	●	●

Ordering-code (example):

2 7 0 3 . 7 G

Length: l		**Order code character**
100 mm		= (G)
Diameter: d_2		**Order No**
32 mm		= (7)
Type:		**Order No**
heavy duty		= (3)
Version:		**Order No**
blank		= (0)
Punch:		
with ejector pin		= 27

Material:

HSS
Hardness 62 ± 2 HRC

Execution:

Shaft fine ground.
Special dimensions on request.

Ball lock punch, stepped, round, with ejector pin, heavy duty



2713.

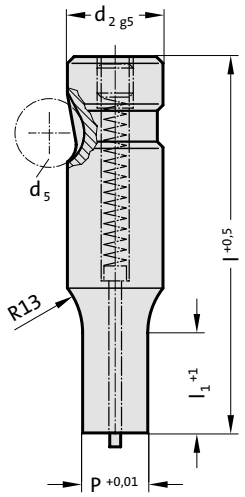

2713. Ball lock punch, stepped, round, with ejector pin, heavy duty

d_2 / (Order No)	d_5	P	l_1 / (Order No)*	l / (Order Code character)	63 (C)	71 (D)	80 (E)	90 (F)	100 (G)	110 (H)	125 (J)
10 / (2)	10	1.6 - 9.9	13 (1) 19 (2)		●	●	●	●	●		
13 / (3)	12	5 - 12.9	13 (1) 19 (2)		●	●	●	●	●	●	●
16 / (4)	12	8 - 15.9	13 (1) 19 (2) 25 (3)		●	●	●	●	●	●	●
20 / (5)	12	12 - 19.9	13 (1) 19 (2) 25 (3)		●	●	●	●	●	●	●
25 / (6)	12	16 - 24.9	13 (1) 19 (2) 25 (3)			●	●	●	●	●	●
32 / (7)	12	24 - 31.9	13 (1) 19 (2) 25 (3)			●	●	●	●	●	●
40 / (9)	12	30 - 39.9	19 (2) 25 (3) 30 (4)				●	●	●	●	●

*l_1=10 where P < 2.20

Material:

HSS
Hardness 62 ± 2 HRC

Execution:

Shaft and punch diameter fine ground.
Special dimensions on request.

Ordering-code (example):

2 7 1 3 . 3 C 1 . 0 5 5 0

Format: Round	
P = ∅ 5,5 mm	= 0550
Punch cutting length: l_1	**Order No**
13 mm	= (1)
length: l	**Order code character**
63 mm	= (C)
diameter: d_2	**Order No**
13 mm	= (3)
Type:	**Order No**
heavy duty	= (3)
Version:	**Order No**
Round	= (1)
Punch:	
with ejector pin	= 27

subject to alterations

Ball lock punch, stepped, square, with ejector pin, heavy duty



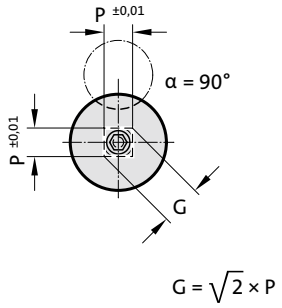

2723.

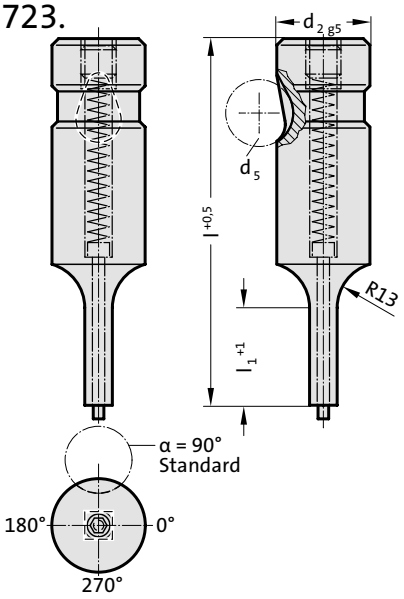



2723. Ball lock punch, stepped, square, with ejector pin, heavy duty

d_2 / (Order No)	d_5	P_{min}	G_{max}	l_1 / (Order No)*	l / (Order Code character)	63 (C)	71 (D)	80 (E)	90 (F)	100 (G)	110 (H)	125 (J)
10 / (2)	10	1.6	9.9	13 (1) 19 (2)		●	●	●	●	●		
13 / (3)	12	4.5	12.9	13 (1) 19 (2)		●	●	●	●	●	●	●
16 / (4)	12	6	15.9	13 (1) 19 (2) 25 (3)		●	●	●	●	●	●	●
20 / (5)	12	8	19.9	13 (1) 19 (2) 25 (3)		●	●	●	●	●	●	●
25 / (6)	12	10	24.9	13 (1) 19 (2) 25 (3)			●	●	●	●	●	●
32 / (7)	12	12.5	31.9	13 (1) 19 (2) 25 (3)			●	●	●	●	●	●
40 / (9)	12	14	39.9	19 (2) 25 (3) 30 (4)				●	●	●	●	●

*l_1=10 where P < 2.20

Ordering-code (example):

2 7 2 3 . 2 F 1 . 0 6 5 0 B

Angle:	90°	**Order code character** = (B)
Format: Square, length P	P = 6,5 mm	= 0650
Punch cutting length: l_1	13 mm	**Order No** = (1)
Length: l	90 mm	**Order code character** = (F)
Diameter: d_2	10 mm	**Order No** = (2)
Type:	heavy duty	**Order No** = (3)
Version:	Square	**Order No** = (2)
Punch:	with ejector pin	= 27

Material:

HSS
Hardness 62 ± 2 HRC

Execution:

Shaft and punch shape fine ground.
Special dimensions on request.

FIBRO

Ball lock punch, stepped, rectangular, with ejector pin, heavy duty



2733.

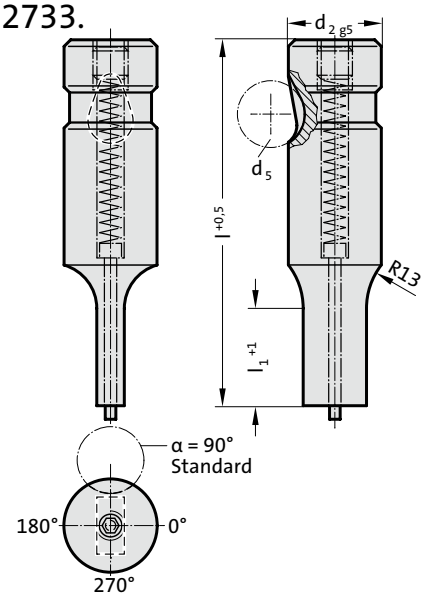

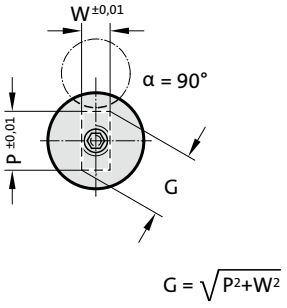

CAD

2733. Ball lock punch, stepped, rectangular, with ejector pin, heavy duty

d_2 / (Order No)	d_5	W_{min}	G_{max}	l_1 / (Order No)*	l / (Order Code character)	63 (C)	71 (D)	80 (E)	90 (F)	100 (G)	110 (H)	125 (J)
10 / (2)	10	1.6	9.9	13 (1) 19 (2)		●	●	●	●	●	●	●
13 / (3)	12	4.5	12.9	13 (1) 19 (2)		●	●	●	●	●	●	●
16 / (4)	12	6	15.9	13 (1) 19 (2) 25 (3)		●	●	●	●	●	●	●
20 / (5)	12	8	19.9	13 (1) 19 (2) 25 (3)		●	●	●	●	●	●	●
25 / (6)	12	10	24.9	13 (1) 19 (2) 25 (3)			●	●	●	●	●	●
32 / (7)	12	12.5	31.9	13 (1) 19 (2) 25 (3)			●	●	●	●	●	●
40 / (9)	12	14	39.9	19 (2) 25 (3) 30 (4)				●	●	●	●	●

*l_1=10 where W < 2.20

Material:

HSS
Hardness 62 ± 2 HRC

Execution:

Shaft and punch shape fine ground.
Special dimensions on request.

Ordering-code (example):

2733.7F2.1400.1250B

Angle:	**Order code character**
90°	= (B)
Format: Rectangular, width W	
W = 12,5 mm	= 1250
Format: Rectangular, length P	
P = 14,0 mm	= 1400
Punch cutting length: l_1	**Order No**
19 mm	= (2)
Length: l	**Order code character**
90 mm	= (F)
Diameter: d_2	**Order No**
32 mm	= (7)
Type:	**Order No**
heavy duty	= (3)
Version:	**Order No**
Rectangular	= (3)
Punch:	
with ejector pin	= 27

Ball lock punch, stepped, slot, with ejector pin, heavy duty

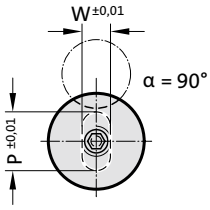

G = P

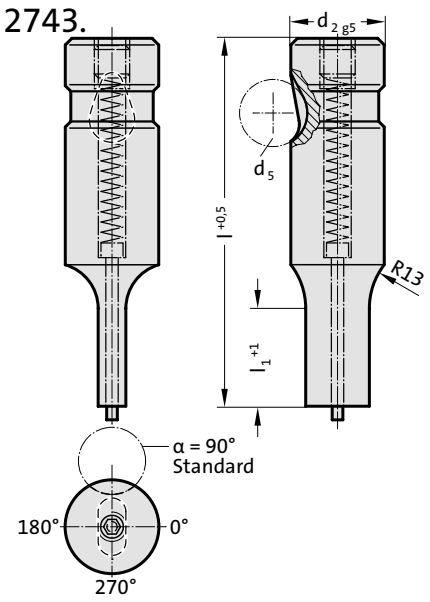



2743. Ball lock punch, stepped, slot, with ejector pin, heavy duty

d_2 / (Order No)	d_5	W_{min}	G_{max}	l_1 / (Order No)*	l / (Order Code character)	63 (C)	71 (D)	80 (E)	90 (F)	100 (G)	110 (H)	125 (J)
10 / (2)	10	1.6	9.9	13 (1) 19 (2)		●	●	●	●	●		
13 / (3)	12	4.5	12.9	13 (1) 19 (2)		●	●	●	●	●	●	●
16 / (4)	12	6	15.9	13 (1) 19 (2) 25 (3)		●	●	●	●	●	●	●
20 / (5)	12	8	19.9	13 (1) 19 (2) 25 (3)		●	●	●	●	●	●	●
25 / (6)	12	10	24.9	13 (1) 19 (2) 25 (3)			●	●	●	●	●	●
32 / (7)	12	12.5	31.9	13 (1) 19 (2) 25 (3)			●	●	●	●	●	●
40 / (9)	12	14	39.9	19 (2) 25 (3) 30 (4)				●	●	●	●	●

*l_1=10 where W < 2.20

Ordering-code (example):

2 7 4 3 . 2 F 1 . 0 6 5 0 . 0 4 5 0 B

Angle		**Order code character**
90°		= (B)
Format: Slot, width W		
W = 4,5 mm		= 0450
Format: Slot, length P		
P = 6,5 mm		= 0650
Punch cutting length: l_1		**Order No**
13 mm		= (1)
Length: l		**Order code character**
90 mm		= (F)
Diameter: d_2		**Order No**
10 mm		= (2)
Type:		**Order No**
heavy duty		= (3)
Version:		**Order No**
Slot		= (4)
Punch:		
with ejector pin		= 27

Material:

HSS
Hardness 62 ± 2 HRC

Execution:

Shaft and punch shape fine ground.
Special dimensions on request.

Ball lock punch, stepped, rectangle with radiussed corners, with ejector pin, heavy duty



2753.

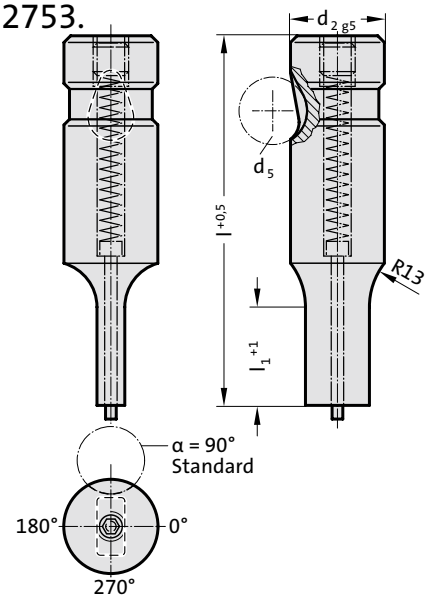

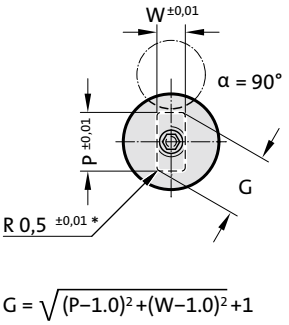

$$G = \sqrt{(P-1.0)^2+(W-1.0)^2}+1$$

2753. Ball lock punch, stepped, rectangle with radiussed corners, with ejector pin, heavy duty

d_2 / (Order No)	d_5	W_{min}	G_{max}	l_1 / (Order No)*	l / (Order Code character)	63 (C)	71 (D)	80 (E)	90 (F)	100 (G)	110 (H)	125 (J)
10 / (2)	10	1.6	9.9	13 (1) 19 (2)		●	●	●	●	●		
13 / (3)	12	4.5	12.9	13 (1) 19 (2)		●	●	●	●	●	●	●
16 / (4)	12	6	15.9	13 (1) 19 (2) 25 (3)		●	●	●	●	●	●	●
20 / (5)	12	8	19.9	13 (1) 19 (2) 25 (3)		●	●	●	●	●	●	●
25 / (6)	12	10	24.9	13 (1) 19 (2) 25 (3)			●	●	●	●	●	●
32 / (7)	12	12.5	31.9	13 (1) 19 (2) 25 (3)			●	●	●	●	●	●
40 / (9)	12	14	39.9	19 (2) 25 (3) 30 (4)				●	●	●	●	●

*l_1=10 where W < 2.20

Material:

HSS
Hardness 62 ± 2 HRC

Execution:

Shaft and punch shape fine ground.
Special dimensions on request.
* For other radius options, see standardised special shapes.

Ordering-code (example):

2753.3F1.1215.0915B

Angle:	**Order code character**
90°	= (B)
Format: Rectangle with radiused corners, width W	
W = 9,15 mm	= 0915
Format: Rectangle with radiused corners, length P	
P = 12,15 mm	= 1215
Punch cutting length: l_1	**Order No**
13 mm	= (1)
Length: l	**Order code character**
90 mm	= (F)
Diameter: d_2	**Order No**
13 mm	= (3)
Type:	**Order No**
heavy duty	= (3)
Version:	**Order No**
Rectangle with radiused corners	= (5)
Punch:	
with ejector pin	= 27

subject to alterations

Ball lock punch, punch larger than shaft, blank, heavy duty

2205.

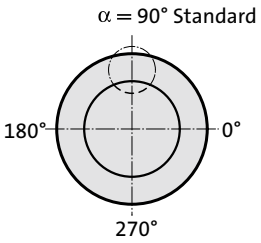

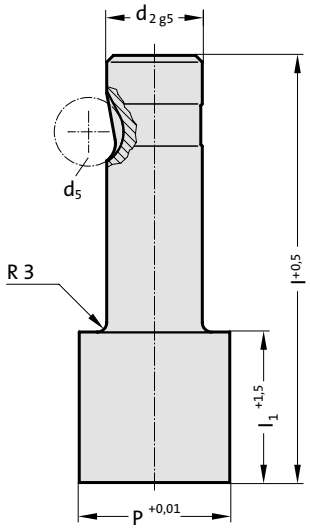



2205. Ball lock punch, punch larger than shaft, blank, heavy duty

d_2 / (Order No)	d_5	P	l_1 / (Order No)	l / (Order Code character)	80 (E)	90 (F)	100 (G)
13 / (3)	12	32	19 (2) 30 (4)		●	●	●
16 / (4)	12	38	19 (2) 30 (4)		●	●	●
20 / (5)	12	40	19 (2) 30 (4)		●	●	●
25 / (6)	12	44	19 (2) 30 (4)		●	●	●
32 / (7)	12	50	19 (2) 30 (4)		●	●	●
40 / (9)	12	56	19 (2) 30 (4)		●	●	●

Ordering-code (example):

2 2 0 5 . 7 G 4 . 5 0 0 0

Format: Round
P = ∅ 50,0 mm = 5000
Punch cutting length: l_1 **Order No**
30 mm = (4)
length: l **Order code character**
100 mm = (G)
diameter: d_2 **Order No**
32 mm = (7)
Type: **Order No**
punch larger, heavy duty = (5)
Version: **Order No**
Blank = (0)
Punch:
without ejector pin = 22

Material:

HSS
Hardness 62 ± 2 HRC

Execution:

Shaft and punch diameter fine ground.
Special dimensions on request.

Ball lock punch, punch larger than shaft, round, heavy duty



2215.

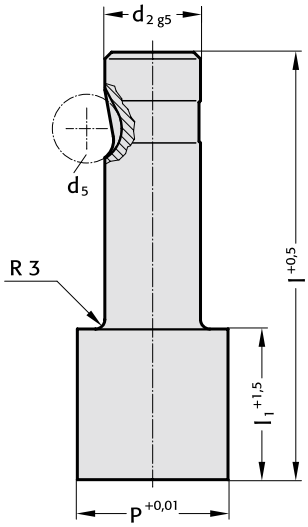

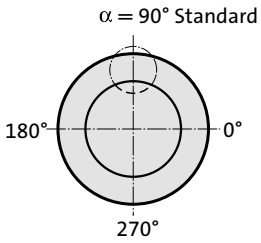

2215. Ball lock punch, punch larger than shaft, round, heavy duty

d_2 / (Order No)	d_5	P	l_1 / (Order No)	l / (Order Code character)	80 (E)	90 (F)	100 (G)
13 / (3)	12	13 - 32	19 (2) 30 (4)		●	●	●
16 / (4)	12	16 - 38	19 (2) 30 (4)		●	●	●
20 / (5)	12	20 - 40	19 (2) 30 (4)		●	●	●
25 / (6)	12	25 - 44	19 (2) 30 (4)		●	●	●
32 / (7)	12	32 - 50	19 (2) 30 (4)		●	●	●
40 / (9)	12	40 - 56	19 (2) 30 (4)		●	●	●

Material:

HSS
Hardness 62 ± 2 HRC

Execution:

Shaft and punch diameter fine ground.
Special dimensions on request.

Ordering-code (example):

2 2 1 5 . 7 G 2 . 3 2 1 0

Format: Round	
P = ∅ 32,1 mm	= 3210
Punch cutting length: l_1	**Order No**
19 mm	= (2)
length: l	**Order code character**
100 mm	= (G)
diameter: d_2	**Order No**
32 mm	= (7)
Type:	**Order No**
punch larger, heavy duty	= (5)
Version:	**Order No**
Round	= (1)
Punch:	
without ejector pin	= 22

subject to alterations

Ball lock punch, punch larger than shaft, square, heavy duty

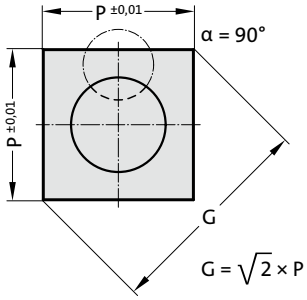

2225.

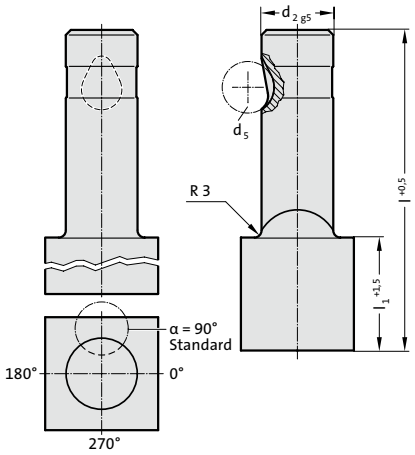



2225. Ball lock punch, punch larger than shaft, square, heavy duty

d_2 / (Order No)	d_5	P_{min}	G_{max}	l_1 / (Order No)	l / (Order Code character)	80 (E)	90 (F)	100 (G)
13 / (3)	12	9.19	32	19 (2) 30 (4)		●	●	●
16 / (4)	12	11.31	38	19 (2) 30 (4)		●	●	●
20 / (5)	12	14.14	40	19 (2) 30 (4)		●	●	●
25 / (6)	12	17.68	44	19 (2) 30 (4)		●	●	●
32 / (7)	12	22.63	50	19 (2) 30 (4)		●	●	●
40 / (9)	12	28.28	56	19 (2) 30 (4)		●	●	●

Ordering-code (example):

2 2 2 5 . 4 F 4 . 1 1 5 0 B

Angle:	90°	**Order code character** = (B)
Format: Square, length P	P = 11,5 mm	= 1150
Punch cutting length: l_1	30 mm	**Order No** = (4)
Length: l	90 mm	**Order code character** = (F)
Diameter: d_2	16 mm	**Order No** = (4)
Type:	punch larger, heavy duty	**Order No** = (5)
Version:	Square	**Order No** = (2)
Punch:	without ejector pin	= 22

Material:

HSS
Hardness 62 ± 2 HRC

Execution:

Shaft and punch shape fine ground.
Special dimensions on request.

Ball lock punch, punch larger than shaft, rectangular, heavy duty



2235.

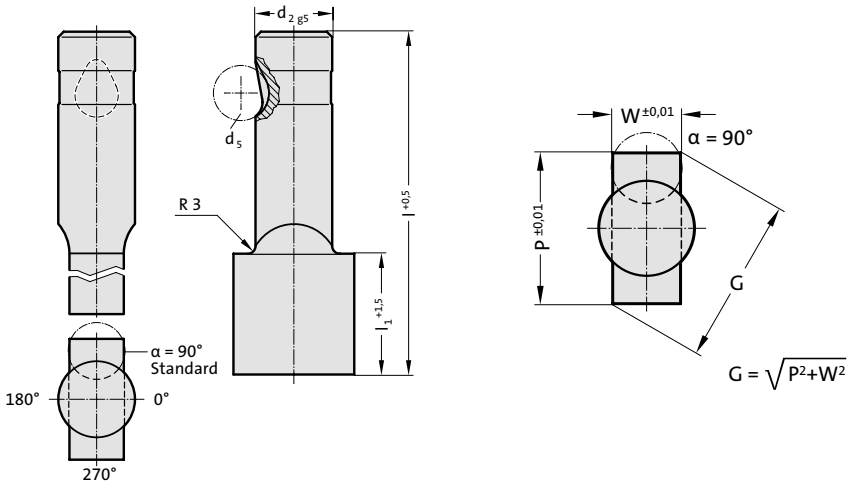

2235. Ball lock punch, punch larger than shaft, rectangular, heavy duty

d_2 / (Order No)	d_5	W_{min}	G_{max}	l_1 / (Order No)	l / (Order Code character)	80 (E)	90 (F)	100 (G)
13 / (3)	12	5	32	19 (2) 30 (4)		●	●	●
16 / (4)	12	6.5	38	19 (2) 30 (4)		●	●	●
20 / (5)	12	8	40	19 (2) 30 (4)		●	●	●
25 / (6)	12	10	44	19 (2) 30 (4)		●	●	●
32 / (7)	12	11.5	50	19 (2) 30 (4)		●	●	●
40 / (9)	12	14	56	19 (2) 30 (4)		●	●	●

Material:

HSS
Hardness 62 ± 2 HRC

Execution:

Shaft and punch shape fine ground.
Special dimensions on request.

Ordering-code (example):

2235.4F4.1400.1100B

Angle:	**Order code character**
90°	= (B)
Format: Rectangular, width W	
W = 11,0 mm	= 1100
Format: Rectangular, length P	
P = 14 mm	= 1400
Punch cutting length: l_1	**Order No**
30 mm	= (4)
Length: l	**Order code character**
90 mm	= (F)
Diameter: d_2	**Order No**
16 mm	= (4)
Type:	**Order No**
punch larger, heavy duty	= (5)
Version:	**Order No**
Rectangular	= (3)
Punch:	
without ejector pin	= 22

subject to alterations

Ball lock punch, punch larger than shaft, slot, heavy duty

2245.

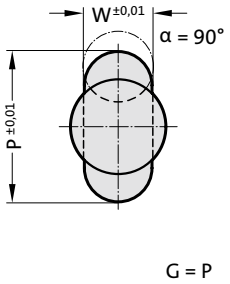

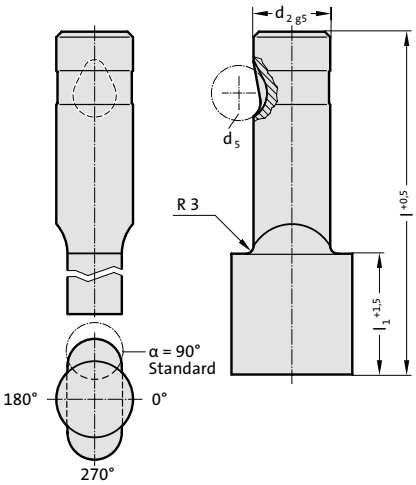



2245. Ball lock punch, punch larger than shaft, slot, heavy duty

d_2 / (Order No)	d_5	W_{min}	G_{max}	l_1 / (Order No)	l / (Order Code character)	80 (E)	90 (F)	100 (G)
13 / (3)	12	5	32	19 (2) 30 (4)		●	●	●
16 / (4)	12	6.5	38	19 (2) 30 (4)		●	●	●
20 / (5)	12	8	40	19 (2) 30 (4)		●	●	●
25 / (6)	12	10	44	19 (2) 30 (4)		●	●	●
32 / (7)	12	11.5	50	19 (2) 30 (4)		●	●	●
40 / (9)	12	14	56	19 (2) 30 (4)		●	●	●

Ordering-code (example):

2 2 4 5 . 7 F 2 . 3 8 0 0 . 1 1 5 0 B

	Angle	**Order code character**
	90°	= (B)
	Format: Slot, width W	
	W = 11,5 mm	= 1150
	Format: Slot, length P	
	P = 38,0 mm	= 3800
	Punch cutting length: l_1	**Order No**
	19 mm	= (2)
	Length: l	**Order code character**
	90 mm	= (F)
	Diameter: d_2	**Order No**
	32 mm	= (7)
	Type:	**Order No**
	punch larger, heavy duty	= (5)
	Version:	**Order No**
	Slot	= (4)
	Punch:	
	without ejector pin	= 22

Material:

HSS
Hardness 62 ± 2 HRC

Execution:

Shaft and punch shape fine ground.
Special dimensions on request.

Ball lock punch, punch larger than shaft, rectangle with radiussed corners, heavy duty



2255.

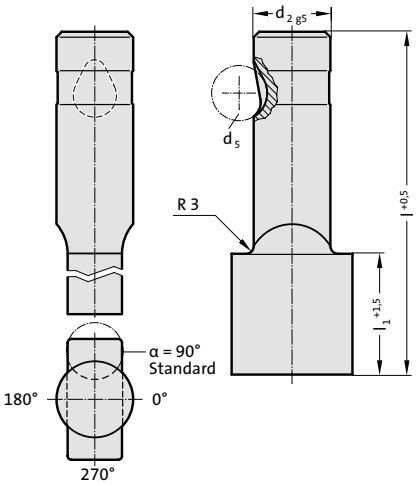

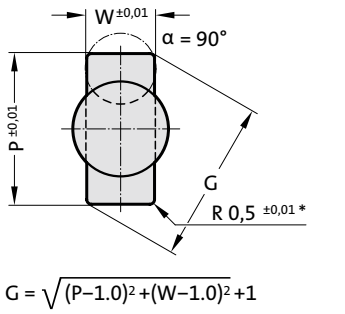

2255. Ball lock punch, punch larger than shaft, rectangle with radiussed corners, heavy duty

d_2 / (Order No)	d_5	W_{min}	G_{max}	l_1 / (Order No)	l / (Order Code character)	80 (E)	90 (F)	100 (G)
13 / (3)	12	5	32	19 (2)	30 (4)	●	●	●
16 / (4)	12	6.5	38	19 (2)	30 (4)	●	●	●
20 / (5)	12	8	40	19 (2)	30 (4)	●	●	●
25 / (6)	12	10	44	19 (2)	30 (4)	●	●	●
32 / (7)	12	11.5	50	19 (2)	30 (4)	●	●	●
40 / (9)	12	14	56	19 (2)	30 (4)	●	●	●

Material:

HSS
Hardness 62 ± 2 HRC

Execution:

Shaft and punch shape fine ground.
Special dimensions on request.
* For other radius options, see standardised special shapes.

Ordering-code (example):

2255.4F2.1400.1100B

Angle:	**Order code character**
90°	= (B)
Format: Rectangle with radiused corners, width W	
W = 11,0 mm	= 1100
Format: Rectangle with radiused corners, length P	
P = 14,0 mm	= 1400
Punch cutting length: l_1	**Order No**
19 mm	= (2)
Length: l	**Order code character**
90 mm	= (F)
Diameter: d_2	**Order No**
16 mm	= (4)
Type:	**Order No**
punch larger, heavy duty	= (5)
Version:	**Order No**
Rectangle with radiused corners	= (5)
Punch:	
without ejector pin	= 22

subject to alterations

Ball lock punch, punch larger than shaft, blank, with ejector pin, heavy duty



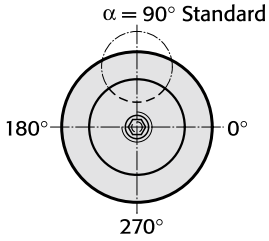

2705.

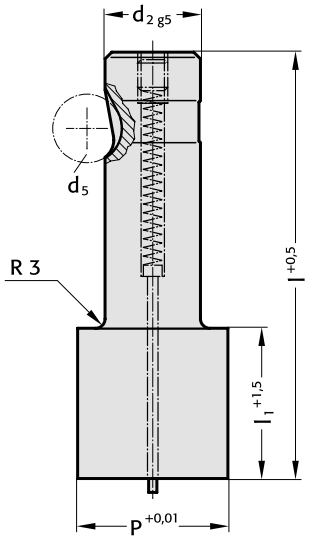



2705. Ball lock punch, punch larger than shaft, blank, with ejector pin, heavy duty

d_2 / (Order No)	P	l_1 / (Order No)	l / (Order Code character)	80 (E)	90 (F)	100 (G)
13 / (3)	32	19 (2) 30 (4)		●	●	●
16 / (4)	38	19 (2) 30 (4)		●	●	●
20 / (5)	40	19 (2) 30 (4)		●	●	●
25 / (6)	44	19 (2) 30 (4)		●	●	●
32 / (7)	50	19 (2) 30 (4)		●	●	●
40 / (9)	56	19 (2) 30 (4)		●	●	●

Ordering-code (example):

2 7 0 5 . 7 G 4 . 5 0 0 0

Format: Round	
P = ∅ 50,0 mm	= 5000
Punch cutting length: l_1	**Order No**
30 mm	= (4)
length: l	**Order code character**
100 mm	= (G)
diameter: d_2	**Order No**
32 mm	= (7)
Type:	**Order No**
punch larger, heavy duty	= (5)
Version:	**Order No**
Blank	= (0)
Punch:	
with ejector pin	= 27

Material:

HSS
Hardness 62 ± 2 HRC

Execution:

Shaft and punch diameter fine ground.
Special dimensions on request.

FIBRO

Ball lock punch, punch larger than shaft, round, with ejector pin, heavy duty



2715.

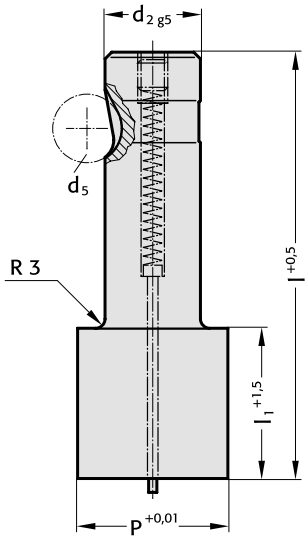

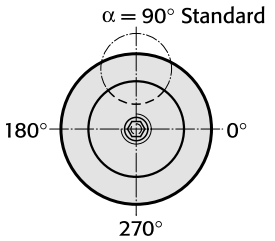

2715. Ball lock punch, punch larger than shaft, round, with ejector pin, heavy duty

d_2 / (Order No)	d_5	P	l_1 / (Order No)	l / (Order Code character)	80 (E)	90 (F)	100 (G)
13 / (3)	12	13 - 32	19 (2) 30 (4)		●	●	●
16 / (4)	12	16 - 38	19 (2) 30 (4)		●	●	●
20 / (5)	12	20 - 40	19 (2) 30 (4)		●	●	●
25 / (6)	12	25 - 44	19 (2) 30 (4)		●	●	●
32 / (7)	12	32 - 50	19 (2) 30 (4)		●	●	●
40 / (9)	12	40 - 56	19 (2) 30 (4)		●	●	●

Material:

HSS
Hardness 62 ± 2 HRC

Execution:

Shaft and punch diameter fine ground.
Special dimensions on request.

Ordering-code (example):

2715.7G2.3210

Format: Round
P = ∅ 32,1 mm = 3210
Punch cutting length: l_1 **Order No**
19 mm = (2)
length: l **Order code character**
100 mm = (G)
diameter: d_2 **Order No**
32 mm = (7)
Type: **Order No**
punch larger, heavy duty = (5)
Version: **Order No**
Round = (1)
Punch:
with ejector pin = 27

subject to alterations

Ball lock punch, punch larger than shaft, square, with ejector pin, heavy duty



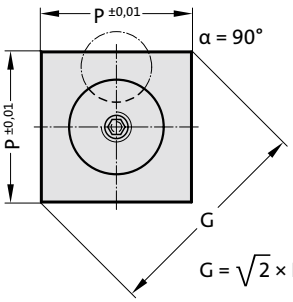

2725.

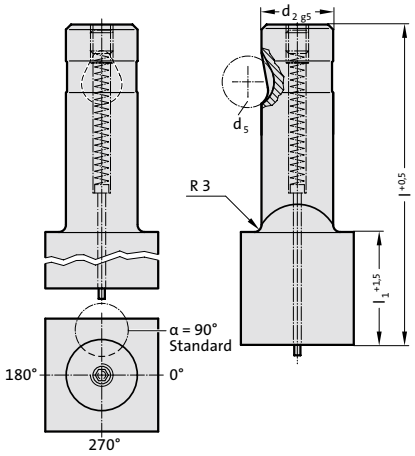



2725. Ball lock punch, punch larger than shaft, square, with ejector pin, heavy duty

d_2 / (Order No)	d_5	P_{min}	G_{max}	l_1 / (Order No)	l / (Order Code character)	80 (E)	90 (F)	100 (G)
13 / (3)	12	9.19	32	19 (2) 30 (4)		●	●	●
16 / (4)	12	11.31	38	19 (2) 30 (4)		●	●	●
20 / (5)	12	14.14	40	19 (2) 30 (4)		●	●	●
25 / (6)	12	17.68	44	19 (2) 30 (4)		●	●	●
32 / (7)	12	22.63	50	19 (2) 30 (4)		●	●	●
40 / (9)	12	28.28	56	19 (2) 30 (4)		●	●	●

Ordering-code (example):

2 7 2 5 . 4 F 4 . 2 5 0 0 B

Angle:	90°	**Order code character** = (B)
Format: Square, length P	P = 25,0 mm	= 2500
Punch cutting length: l_1	30 mm	**Order No** = (4)
Length: l	90 mm	**Order code character** = (F)
Diameter: d_2	16 mm	**Order No** = (4)
Type:	punch larger, heavy duty	**Order No** = (5)
Version:	Square	**Order No** = (2)
Punch:	with ejector pin	= 27

Material:

HSS
Hardness 62 ± 2 HRC

Execution:

Shaft and punch shape fine ground.
Special dimensions on request.

FIBRO

Ball lock punch, punch larger than shaft, rectangular, with ejector pin, heavy duty



2735.

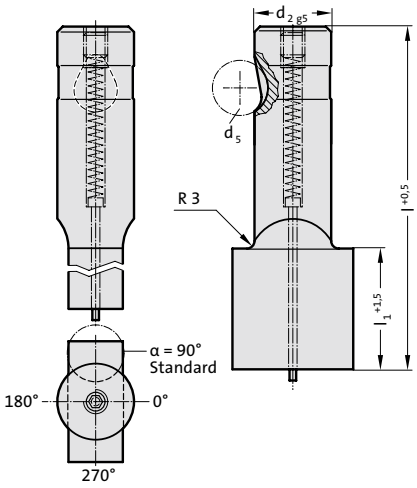

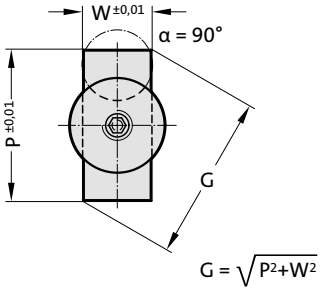

2735. Ball lock punch, punch larger than shaft, rectangular, with ejector pin, heavy duty

d_2 / (Order No)	d_5	W_{min}	G_{max}	l_1 / (Order No)	l / (Order Code character)	80 (E)	90 (F)	100 (G)
13 / (3)	12	5	32	19 (2) 30 (4)		●	●	●
16 / (4)	12	6.5	38	19 (2) 30 (4)		●	●	●
20 / (5)	12	8	40	19 (2) 30 (4)		●	●	●
25 / (6)	12	10	44	19 (2) 30 (4)		●	●	●
32 / (7)	12	11.5	50	19 (2) 30 (4)		●	●	●
40 / (9)	12	14	56	19 (2) 30 (4)		●	●	●

Material:

HSS
Hardness 62 ± 2 HRC

Execution:

Shaft and punch shape fine ground.
Special dimensions on request.

Ordering-code (example):

2735.4F4.1400.1100B

Angle:	**Order code character**
90°	= (B)
Format: Rectangular, width W	
W = 11,0 mm	= 1100
Format: Rectangular, length P	
P = 14,0 mm	= 1400
Punch cutting length: l_1	**Order No**
30 mm	= (4)
Length: l	**Order code character**
90 mm	= (F)
Diameter: d_2	**Order No**
16 mm	= (4)
Type:	**Order No**
punch larger, heavy duty	= (5)
Version:	**Order No**
Rectangular	= (3)
Punch:	
with ejector pin	= 27

subject to alterations

Ball lock punch, punch larger than shaft, slot, with ejector pin, heavy duty



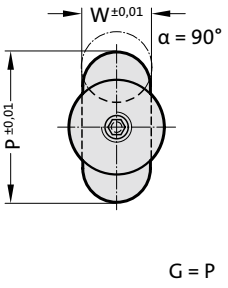

2745.

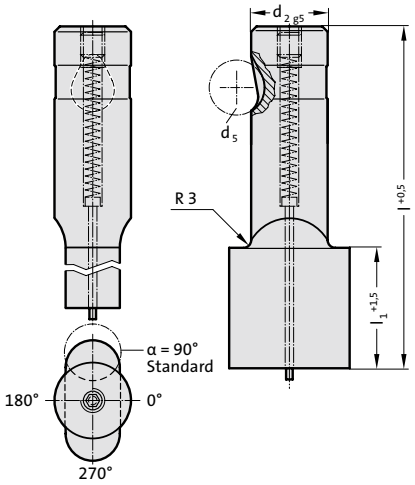



2745. Ball lock punch, punch larger than shaft, slot, with ejector pin, heavy duty

d_2 / (Order No)	d_5	W_{min}	G_{max}	l_1 / (Order No)	l / (Order Code character)	80 (E)	90 (F)	100 (G)
13 / (3)	12	5	32	19 (2) 30 (4)		●	●	●
16 / (4)	12	6.5	38	19 (2) 30 (4)		●	●	●
20 / (5)	12	8	40	19 (2) 30 (4)		●	●	●
25 / (6)	12	10	44	19 (2) 30 (4)		●	●	●
32 / (7)	12	11.5	50	19 (2) 30 (4)		●	●	●
40 / (9)	12	14	56	19 (2) 30 (4)		●	●	●

Ordering-code (example):

2 7 4 5 . 4 F 4 . 1 4 0 0 . 1 1 0 0 B

	Angle	**Order code character**
B	90°	= (B)
	Format: Slot, width W	
1100	W = 11,0 mm	= 1100
	Format: Slot, length P	
1400	P = 14,0 mm	= 1400
	Punch cutting length: l_1	**Order No**
4	30 mm	= (4)
	Length: l	**Order code character**
F	90 mm	= (F)
	Diameter: d_2	**Order No**
4	16 mm	= (4)
	Type:	**Order No**
5	punch larger, heavy duty	= (5)
	Version:	**Order No**
4	Slot	= (4)
	Punch:	
27	with ejector pin	= 27

Material:

HSS
Hardness 62 ± 2 HRC

Execution:

Shaft and punch shape fine ground.
Special dimensions on request.

FIBRO

Ball lock punch, punch larger than shaft, rectangle with radiussed corners, with ejector pin, heavy duty



2755.

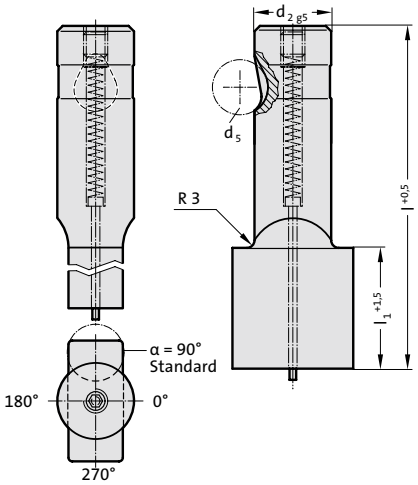



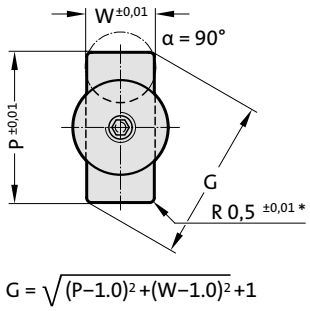

$$G = \sqrt{(P-1.0)^2 + (W-1.0)^2} + 1$$

2755. Ball lock punch, punch larger than shaft, rectangle with radiussed corners, with ejector pin, heavy duty

d_2 / (Order No)	d_5	W_{min}	G_{max}	l_1 / (Order No)	l / (Order Code character)	80 (E)	90 (F)	100 (G)
13 / (3)	12	5	32	19 (2)	30 (4)	●	●	●
16 / (4)	12	6.5	38	19 (2)	30 (4)	●	●	●
20 / (5)	12	8	40	19 (2)	30 (4)	●	●	●
25 / (6)	12	10	44	19 (2)	30 (4)	●	●	●
32 / (7)	12	11.5	50	19 (2)	30 (4)	●	●	●
40 / (9)	12	14	56	19 (2)	30 (4)	●	●	●

Material:

HSS
Hardness 62 ± 2 HRC

Execution:

Shaft and punch shape fine ground.
Special dimensions on request.
* For other radius options, see standardised special shapes.

Ordering-code (example):

2755.3F2.1215.1100B

Angle:	**Order code character**
90°	= (B)
Format: Rectangle with radiused corners, width W	
W = 11,0 mm	= 1100
Format: Rectangle with radiused corners, length P	
P = 12,15 mm	= 1215
Punch cutting length: l_1	**Order No**
19 mm	= (2)
Length: l	**Order code character**
90 mm	= (F)
Diameter: d_2	**Order No**
13 mm	= (3)
Type:	**Order No**
punch larger, heavy duty	= (5)
Version:	**Order No**
Rectangle with radiused corners	= (5)
Punch:	
with ejector pin	= 27

subject to alterations

Ball lock pilot pin, with tapered tip, heavy duty

2263.

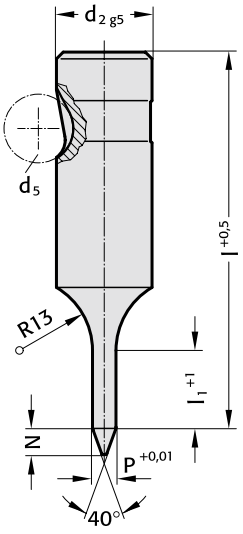



2263. Ball lock pilot pin, with tapered tip, heavy duty

d_2 / (Order No)	d_5	P	l_1 / (Order No)	N	l / (Order Code character)	71 (D)	80 (E)	90 (F)	100 (G)	110 (H)	125 (J)	140 (K)	150 (l)
10 / (2)	10	5,9-9,9	19 (2)	8		●	●	●	●	●			
13 / (3)	12	9,9-12,9	19 (2)	10		●	●	●	●	●	●	●	
16 / (4)	12	12,9-15,9	25 (3)	15		●	●	●	●	●	●	●	●
20 / (5)	12	15,9-19,9	25 (3)	20		●	●	●	●	●	●	●	●
25 / (6)	12	19,9-24,9	25 (3)	25			●	●	●	●	●	●	●
32 / (7)	12	24,9-31,9	25 (3)	30			●	●	●	●	●	●	●
40 / (9)	12	31,9-39,9	30 (4)	40			●	●	●	●	●	●	●

Ordering-code (example):

2 2 6 3 . 4 G 3 . 1 4 0 0

Format: Round
P = Ø 14,0 mm = 1400
Punch cutting length: l_1 **Order No**
25 mm = (3)
Length: l **Order code character**
100 mm = (G)
Diameter: d_2 **Order No**
16 mm = (4)
Type: **Order No**
heavy = (3)
Version: **Order No**
Pilot pin with tapered tip = (6)
Punch:
without ejector pin = 22

Material:

HSS
Hardness 62 ± 2 HRC

Execution:

Shaft and pilot pin fine ground.
Special dimensions on request.

Ball lock pilot pin, with parabolic tip, heavy duty



2273.

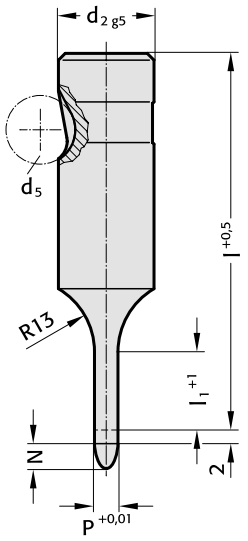

2273. Ball lock pilot pin, with parabolic tip, heavy duty

d_2 / (Order No)	d_5	P	l_1 / (Order No)	l / (Order Code character)	63 (C)	71 (D)	80 (E)	90 (F)	100 (G)	110 (H)	125 (J)
10 / (2)	10	5,9-9,9	19 (2)		●	●	●	●	●		
13 / (3)	12	9,9-12,9	19 (2)		●	●	●	●	●	●	●
16 / (4)	12	12,9-15,9	25 (3)		●	●	●	●	●	●	●
20 / (5)	12	15,9-19,9	25 (3)		●	●	●	●	●	●	●
25 / (6)	12	19,9-24,9	25 (3)		●	●	●	●	●	●	●
32 / (7)	12	24,9-31,9	25 (3)			●	●	●	●	●	●
40 / (9)	12	31,9-39,9	30 (4)				●	●	●	●	●

Material:

HSS
Hardness 62 ± 2 HRC

Execution:

Shaft and pilot pin fine ground.
Special dimensions on request.

Note:

The 2 mm length provides full guidance before the blanking punch contacts the sheet metal.

Length of parabolic tip N:
= 8 mm where P ≤ 10 mm
=12 mm where P 10,1 mm - 15 mm
=15 mm where P > 15 mm

Ordering-code (example):

2 2 7 3 . 4 G 3 . 1 4 0 0

Format: Round	
P = ∅ 14,0 mm	= 1400
Punch cutting length: l_1	**Order No**
25 mm	= (3)
Length: l	**Order code character**
100 mm	= (G)
Diameter: d_2	**Order No**
16 mm	= (4)
Type:	**Order No**
heavy	= (3)
Version:	**Order No**
Pilot pin with parabolic tip	= (7)
Punch:	
without ejector pin	= 22

subject to alterations



Punches ISO 8020

Ordering example
Punches ISO 8020

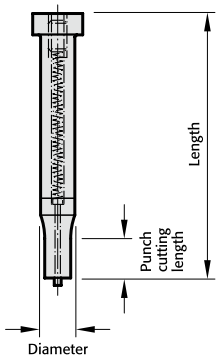

Note: **See table for standard dimensions**
Special dimensions to order

2 2 4 1 . 7 G 4 . 0 6 5 0 . 0 4 5 0 A

Punch:
22 without ejector pin
27 with ejector pin

Version:	Order No
blank	= 0
round	= 1
square	= 2
rectangular	= 3
slot	= 4
rectangle with radiused corners	= 5
pilot pin with tapered tip	= 6
pilot pin parabolic tip	= 7
special shapes	= 9

Type:	Order No
ISO	= 1

Diameter: d_1	Order No
3	= 1
4	= 2
5	= 3
6	= 4
8	= 5
10	= 6
13	= 7
16	= 8
20	= 9
25	=10
32	=11

Punch cutting length: l_1	Order No
8	= 1
10	= 2
13	= 3
19	= 4
25	= 5
30	= 6
special	= X

Lenght: l	Order Code character
50	= A
56	= B
63	= C
71	= D
80	= E
90	= F
100	= G
110	= H
120	= J
125	= K
140	= L
150	= M
200	= N
special	= X

Format: Slot
length P = 6,5 mm

Format: Slot
width W = 4,5 mm

Angle:	Order Code character
0°	= A
90°	= B
180°	= C
270°	= D
special	= X

Ordering Code (Example):

2 2 4 1 . 7 G 4 . 0 6 5 0 . 0 4 5 0 A

- Angle = 0° (A)
- Format: Slot, width W = 4,5 mm (0450)
- Format: Slot, length P = 6,5 mm (0650)
- Punch cutting length: l_1 = 19 mm (4)
- Length: l = 100 mm (G)
- Diameter: d_1 = 13 mm (7)
- Type = ISO (1)
- Version: Slot (4)
- Punch: without ejector pin (22)

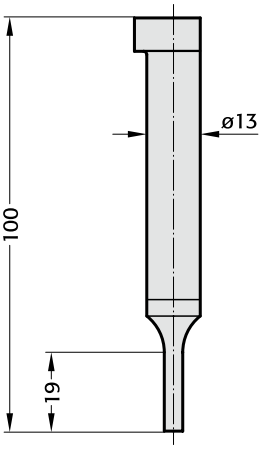

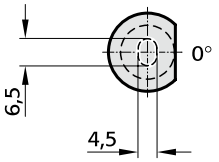

subject to alterations

Punch, blank, ISO 8020

2201.

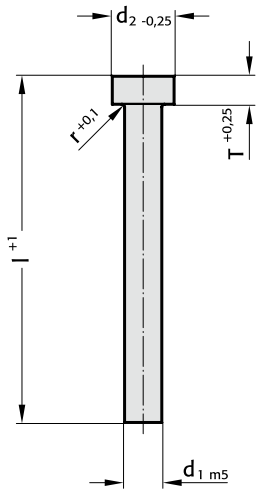



2201. Punch, blank, ISO 8020

d_1 / (Order No)	d_2	r	T	l / (Order Code character)	71 (D)	80 (E)	90 (F)	100 (G)	120 (J)	150 (M)	200 (N)
3 / (1)	5	0.25	3		●	●	●	●	●		
4 / (2)	6	0.25	3		●	●	●	●	●		
5 / (3)	8	0.3	5		●	●	●	●	●		
6 / (4)	9	0.3	5		●	●	●	●	●		
8 / (5)	11	0.3	5		●	●	●	●	●		
10 / (6)	13	0.3	5		●	●	●	●	●	●	
13 / (7)	16	0.4	5		●	●	●	●	●	●	
16 / (8)	19	0.4	5		●	●	●	●	●	●	●
20 / (9)	23	0.4	5		●	●	●	●	●	●	●
25 / (10)	28	0.4	5		●	●	●	●	●	●	●
32 / (11)	35	0.4	5		●	●	●	●	●	●	●

Ordering code (example):

2201.7G .ASP

- **complete for material ASP**
- **Length: l** — 100 mm — **Order Code character** = (G)
- **Diameter: d_1** — 13 mm — **Order No** = (7)
- **Type:** — ISO — **Order No** = (1)
- **Version:** — blank — **Order No** = (0)
- **Punch:** — without ejector pin = 22

Material:

HSS
Hardness:
Shaft 64 ± 2 HRC
Head 52 ± 5 HRC

ASP 23 - ASP 2023
upon request
Description of FIBRO materials for tool and die components see at the beginning of Chapter E.

Execution:

Punch head hot upset-forged. Shoulder and shaft fine ground.
Special dimensions on request.

Punch, stepped, round, ISO 8020



2211.

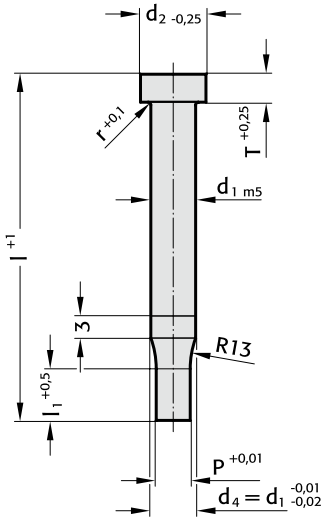

2211. Punch, stepped, round, ISO 8020

d_1 / (Order No)	d_2	P	l_1 / (Order No)	r	T	l / (Order Code character)	71 (D)	80 (E)	90 (F)	100 (G)	120 (J)
3 / (1)	5	0,8-2,9	8 (1) 10 (2)	0.25	3		●	●	●	●	●
4 / (2)	6	1,0-3,9	8 (1) 13 (3)	0.25	3		●	●	●	●	●
5 / (3)	8	1,5-4,9	13 (3) 19 (4)	0.3	5		●	●	●	●	●
6 / (4)	9	1,6-5,9	13 (3) 19 (4)	0.3	5		●	●	●	●	●
8 / (5)	11	2,5-7,9	19 (4) 25 (5)	0.3	5		●	●	●	●	●
10 / (6)	13	4,0-9,9	19 (4) 25 (5)	0.3	5		●	●	●	●	●
13 / (7)	16	5,0-12.9	19 (4) 25 (5)	0.4	5		●	●	●	●	●
16 / (8)	19	8,0-15.9	19 (4) 25 (5)	0.4	5		●	●	●	●	●
20 / (9)	23	12,0-19.9	19 (4) 25 (5)	0.4	5		●	●	●	●	●
25 / (10)	28	16,5-24.9	19 (4) 25 (5)	0.4	5		●	●	●	●	●
32 / (11)	35	20,0-31.9	25 (5) 30 (6)	0.4	5		●	●	●	●	●

Material:

HSS
Hardness:
Shaft 64 ± 2 HRC
Head 52 ± 5 HRC

ASP 23 - ASP 2023
upon request
Description of FIBRO materials for tool and die components see at the beginning of Chapter E.

Execution:

Punch head hot upset-forged. Shoulder, shaft and punch diameter fine ground.
Special dimensions on request.

Ordering-code (example):

2211.7G4.0700

Format: Round
P = ∅ 7,0 mm = 0700
Punch cutting length: l_1 **Order No**
19 mm = (4)
Length: l **Order code character**
100 mm = (G)
Diameter: d_1 **Order No**
13 mm = (7)
Type: **Order No**
ISO = (1)
Version: **Order No**
Round = (1)
Punch:
without ejector pin = 22

Punch, stepped, square, ISO 8020

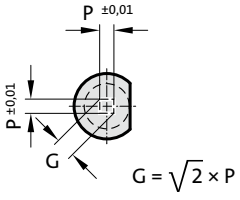

2221.

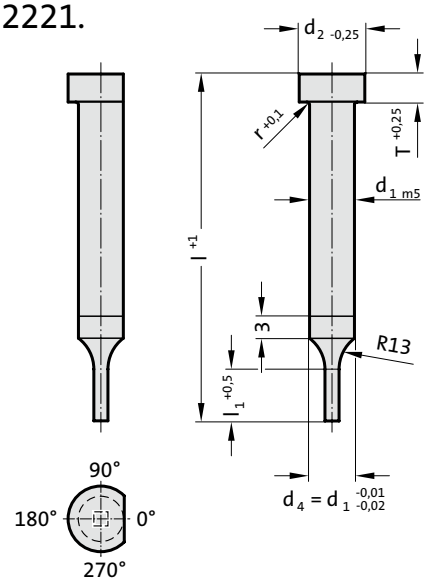



2221. Punch, stepped, square, ISO 8020

d_1 / (Order No)	d_2	P_{min}	G_{max}	l_1 / (Order No)	r	T	l / (Order Code character)	71 (D)	80 (E)	90 (F)	100 (G)	120 (J)
3 / (1)	5	0.5	2.9	8 (1) 10 (2)	0.25	3		●	●	●	●	●
4 / (2)	6	0.8	3.9	8 (1) 13 (3)	0.25	3		●	●	●	●	●
5 / (3)	8	1	4.9	13 (3) 19 (4)	0.3	5		●	●	●	●	●
6 / (4)	9	1.6	5.9	13 (3) 19 (4)	0.3	5		●	●	●	●	●
8 / (5)	11	2	7.9	19 (4) 25 (5)	0.3	5		●	●	●	●	●
10 / (6)	13	3.5	9.9	19 (4) 25 (5)	0.3	5		●	●	●	●	●
13 / (7)	16	4.5	12.9	19 (4) 25 (5)	0.4	5		●	●	●	●	●
16 / (8)	19	6	15.9	19 (4) 25 (5)	0.4	5		●	●	●	●	●
20 / (9)	23	8	19.9	19 (4) 25 (5)	0.4	5		●	●	●	●	●
25 / (10)	28	10	24.9	19 (4) 25 (5)	0.4	5		●	●	●	●	●
32 / (11)	35	10	31.9	25 (5) 30 (6)	0.4	5		●	●	●	●	●

Ordering-code (example):

2 2 2 1 . 10 E 5 . 1 5 0 0 B

Angle:	90°	**Order code character** = (B)
Format: Square, length P	P = 15,0 mm	= 1500
Punch cutting length: l_1	25 mm	**Order No** = (5)
Length: l	80 mm	**Order code character** = (E)
Diameter: d_1	25 mm	**Order No** = (10)
Type:	ISO	**Order No** = (1)
Version:	Square	**Order No** = (2)
Punch:	without ejector pin	= 22

Material:

HSS
Hardness:
Shaft 64 ± 2 HRC
Head 52 ± 5 HRC

ASP 23 - ASP 2023
upon request
Description of FIBRO materials for tool and die components see at the beginning of Chapter E.

Execution:

Punch head hot upset-forged. Shoulder, shaft and punch shape fine ground.
The anti-rotation surface parallel to P = 0° as standard.
Special dimensions on request.

FIBRO

Punch, stepped, rectangular, ISO 8020



2231.

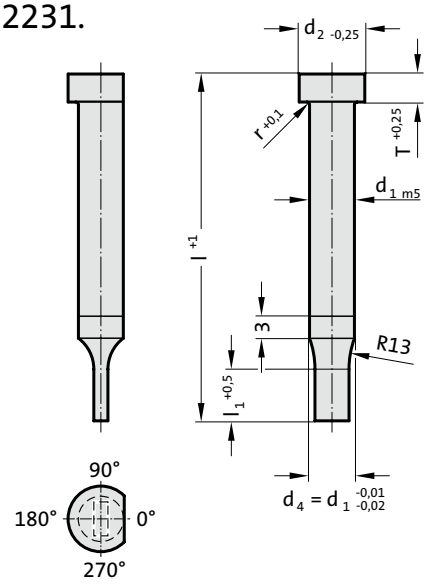

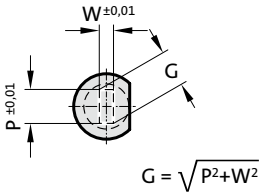

2231. Punch, stepped, rectangular, ISO 8020

d_1 / (Order No)	d_2	W_{min}	G_{max}	l_1 / (Order No)	r	T	l / (Order Code character)	71 (D)	80 (E)	90 (F)	100 (G)	120 (J)
3 / (1)	5	0.5	2.9	8 (1) 10 (2)	0.25	3		●	●	●	●	●
4 / (2)	6	0.8	3.9	8 (1) 13 (3)	0.25	3		●	●	●	●	●
5 / (3)	8	1	4.9	13 (3) 19 (4)	0.3	5		●	●	●	●	●
6 / (4)	9	1.6	5.9	13 (3) 19 (4)	0.3	5		●	●	●	●	●
8 / (5)	11	2	7.9	19 (4) 25 (5)	0.3	5		●	●	●	●	●
10 / (6)	13	3.5	9.9	19 (4) 25 (5)	0.3	5		●	●	●	●	●
13 / (7)	16	4.5	12.9	19 (4) 25 (5)	0.4	5		●	●	●	●	●
16 / (8)	19	6	15.9	19 (4) 25 (5)	0.4	5		●	●	●	●	●
20 / (9)	23	8	19.9	19 (4) 25 (5)	0.4	5		●	●	●	●	●
25 / (10)	28	10	24.9	19 (4) 25 (5)	0.4	5		●	●	●	●	●
32 / (11)	35	10	31.9	25 (5) 30 (6)	0.4	5		●	●	●	●	●

Material:

HSS
Hardness:
Shaft 64 ± 2 HRC
Head 52 ± 5 HRC

ASP 23 - ASP 2023
upon request
Description of FIBRO materials for tool and die components see at the beginning of Chapter E.

Execution:

Punch head hot upset-forged. Shoulder, shaft and punch shape fine ground.
The anti-rotation surface parallel to P = 0° as standard.
Special dimensions on request.

Ordering-code (example):

2231.9F4.1500.1150B

Angle:	**Order code character**
90°	= (B)
Format: Rectangular, width W	
W = 11,5 mm	= 1150
Format: Rectangular, length P	
P = 15,0 mm	= 1500
Punch cutting length: l_1	**Order No**
19 mm	= (4)
Length: l	**Order code character**
90 mm	= (F)
Diameter: d_1	**Order No**
20 mm	= (9)
Type:	**Order No**
ISO	= (1)
Version:	**Order No**
Rectangular	= (3)
Punch:	
without ejector pin	= 22

Punch, stepped, slot, ISO 8020

2241.

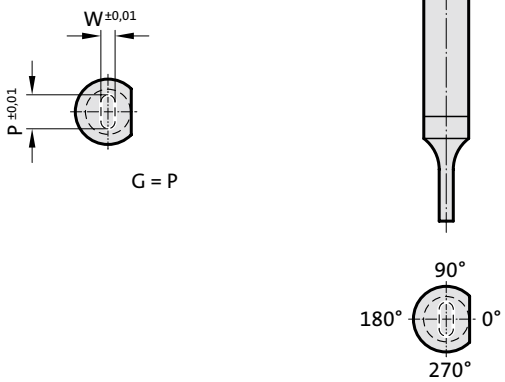

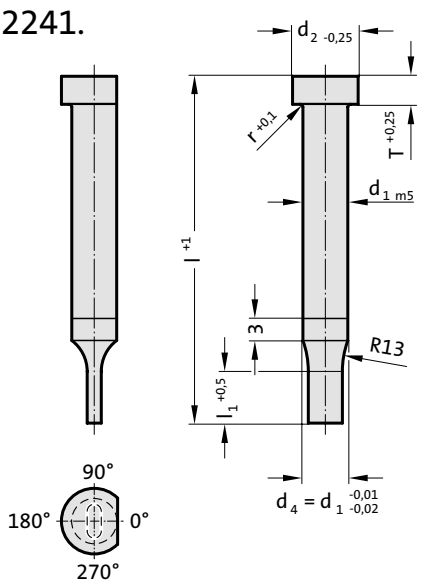



2241. Punch, stepped, slot, ISO 8020

d_1 / (Order No)	d_2	W_{min}	G_{max}	l_1 / (Order No)	r	T	l / (Order Code character)	71 (D)	80 (E)	90 (F)	100 (G)	120 (J)
3 / (1)	5	0.5	2.9	8 (1) 10 (2)	0.25	3		●	●	●	●	●
4 / (2)	6	0.8	3.9	8 (1) 13 (3)	0.25	3		●	●	●	●	●
5 / (3)	8	1	4.9	13 (3) 19 (4)	0.3	5		●	●	●	●	●
6 / (4)	9	1.6	5.9	13 (3) 19 (4)	0.3	5		●	●	●	●	●
8 / (5)	11	2	7.9	19 (4) 25 (5)	0.3	5		●	●	●	●	●
10 / (6)	13	3.5	9.9	19 (4) 25 (5)	0.3	5		●	●	●	●	●
13 / (7)	16	4.5	12.9	19 (4) 25 (5)	0.4	5		●	●	●	●	●
16 / (8)	19	6	15.9	19 (4) 25 (5)	0.4	5		●	●	●	●	●
20 / (9)	23	8	19.9	19 (4) 25 (5)	0.4	5		●	●	●	●	●
25 / (10)	28	10	24.9	19 (4) 25 (5)	0.4	5		●	●	●	●	●
32 / (11)	35	10	31.9	25 (5) 30 (6)	0.4	5		●	●	●	●	●

Ordering-code (example):

2 2 4 1 . 10 E 5 . 2 0 2 0 . 1 2 2 0 A

	Angle	**Order code character**
0	0°	= (A)
1220	**Format: Slot, width W**	
	W = 12,2 mm	= 1220
2020	**Format: Slot, length P**	
	P = 20,20 mm	= 2020
5	**Punch cutting length: l_1**	**Order No**
	25 mm	= (5)
E	**Length: l**	**Order code character**
	80 mm	= (E)
10	**Diameter: d_1**	**Order No**
	25 mm	= (10)
1	**Type:**	**Order No**
	ISO	= (1)
4	**Version:**	**Order No**
	Slot	= (4)
22	**Punch:**	
	without ejector pin	= 22

Material:

HSS
Hardness:
Shaft 64 ± 2 HRC
Head 52 ± 5 HRC

ASP 23 - ASP 2023
upon request
Description of FIBRO materials for tool and die components see at the beginning of Chapter E.

Execution:

Punch head hot upset-forged. Shoulder, shaft and punch shape fine ground.
The anti-rotation surface parallel to P = 0° as standard.
Special dimensions on request.

FIBRO

Punch, stepped, rectangle with radiused corners, ISO 8020



2251.

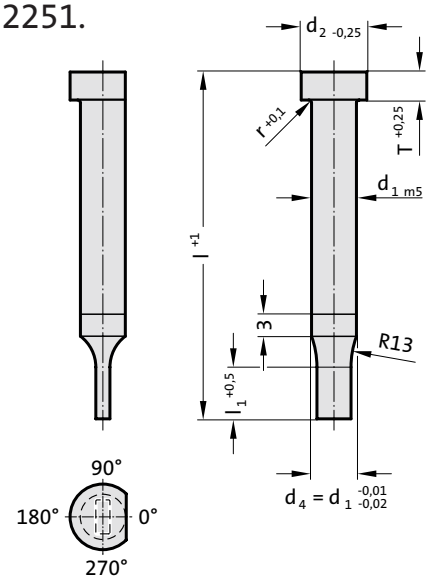

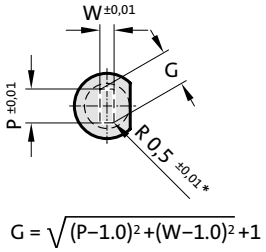

$$G = \sqrt{(P-1.0)^2+(W-1.0)^2}+1$$

2251. Punch, stepped, rectangle with radiused corners, ISO 8020

d_1 / (Order No)	d_2	W_{min}	G_{max}	l_1 / (Order No)	r	T	l / (Order Code character)	71 (D)	80 (E)	90 (F)	100 (G)	120 (J)
3 / (1)	5	0.5	2.9	8 (1) 10 (2)	0.25	3		●	●	●	●	●
4 / (2)	6	0.8	3.9	8 (1) 13 (3)	0.25	3		●	●	●	●	●
5 / (3)	8	1	4.9	13 (3) 19 (4)	0.3	5		●	●	●	●	●
6 / (4)	9	1.6	5.9	13 (3) 19 (4)	0.3	5		●	●	●	●	●
8 / (5)	11	2	7.9	19 (4) 25 (5)	0.3	5		●	●	●	●	●
10 / (6)	13	3.5	9.9	19 (4) 25 (5)	0.3	5		●	●	●	●	●
13 / (7)	16	4.5	12.9	19 (4) 25 (5)	0.4	5		●	●	●	●	●
16 / (8)	19	6	15.9	19 (4) 25 (5)	0.4	5		●	●	●	●	●
20 / (9)	23	8	19.9	19 (4) 25 (5)	0.4	5		●	●	●	●	●
25 / (10)	28	10	24.9	19 (4) 25 (5)	0.4	5		●	●	●	●	●
32 / (11)	35	10	31.9	25 (5) 30 (6)	0.4	5		●	●	●	●	●

Material:

HSS
Hardness:
Shaft 64 ± 2 HRC
Head 52 ± 5 HRC

ASP 23 - ASP 2023
upon request
Description of FIBRO materials for tool and die components see at the beginning of Chapter E
.

Execution:

Punch head hot upset-forged. Shoulder, shaft and punch shape fine ground.
The anti-rotation surface parallel to P = 0° as standard.
Special dimensions on request.
* For other radius options, see standardised special shapes.

Ordering-code (example):

2251.9F4.1215.1100B

Angle:	**Order code character**
90°	= (B)
Format: Rectangle with radiused corners, width W	
W = 11,0 mm	= 1100
Format: Rectangle with radiused corners, length P	
P = 12,15 mm	= 1215
Punch cutting length: l_1	**Order No**
19 mm	= (4)
Length: l	**Order code character**
90 mm	= (F)
Diameter: d_1	**Order No**
20 mm	= (9)
Type:	**Order No**
ISO	= (1)
Version:	**Order No**
Rectangle with radiused corners	= (5)
Punch:	
without ejector pin	= 22

subject to alterations

Punch, blank, with ejector pin, ISO 8020

2701.

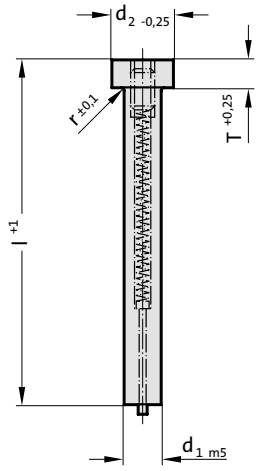



2701. Punch, blank, with ejector pin, ISO 8020

d_1 / (Order No)	d_2	r	T	l / (Order Code character)	71 (D)	80 (E)	90 (F)	100 (G)	120 (J)
5 / (3)	8	0.3	5		●	●	●	●	●
6 / (4)	9	0.3	5		●	●	●	●	●
8 / (5)	11	0.3	5		●	●	●	●	●
10 / (6)	13	0.3	5		●	●	●	●	●
13 / (7)	16	0.4	5		●	●	●	●	●
16 / (8)	19	0.4	5		●	●	●	●	●
20 / (9)	23	0.4	5		●	●	●	●	●
25 / (10)	28	0.4	5		●	●	●	●	●
32 / (11)	35	0.4	5		●	●	●	●	●

Ordering-code (example):

2 7 0 1 . 11 G

Length: l	**Order code character**
100 mm	= (G)
Diameter: d_1	**Order No**
32 mm	= (11)
Type:	**Order No**
ISO	= (1)
Version:	**Order No**
blank	= (0)
Punch:	
with ejector pin	= 27

Material:

HSS
Hardness:
Shaft 64 ± 2 HRC
Head 52 ± 5 HRC

Execution:

Punch head hot upset-forged. Shoulder and shaft fine ground.
Special dimensions on request.

FIBRO

Punch, stepped, round, with ejector pin, ISO 8020



2711.

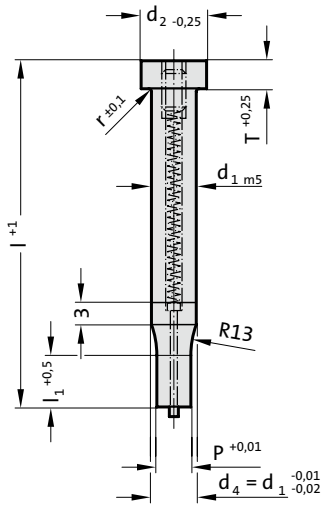

2711. Punch, stepped, round, with ejector pin, ISO 8020

d_1 / (Order No)	d_2	P	l_1 / (Order No)	r	T	l / (Order Code character)	71 (D)	80 (E)	90 (F)	100 (G)	120 (J)
5 / (3)	8	1,6-4,9	13 (3) 19 (4)	0.3	5		●	●	●	●	●
6 / (4)	9	2,5-5,9	13 (3) 19 (4)	0.3	5		●	●	●	●	●
8 / (5)	11	2,5-7,9	19 (4) 25 (5)	0.3	5		●	●	●	●	●
10 / (6)	13	4,0-9,9	19 (4) 25 (5)	0.3	5		●	●	●	●	●
13 / (7)	16	5,0-12.9	19 (4) 25 (5)	0.4	5		●	●	●	●	●
16 / (8)	19	8,0-15.9	19 (4) 25 (5)	0.4	5		●	●	●	●	●
20 / (9)	23	12,0-19.9	19 (4) 25 (5)	0.4	5		●	●	●	●	●
25 / (10)	28	16,5-24.9	19 (4) 25 (5)	0.4	5		●	●	●	●	●
32 / (11)	35	20,0-31.9	25 (5) 30 (6)	0.4	5		●	●	●	●	●

Material:

HSS
Hardness:
Shaft 64 ± 2 HRC
Head 52 ± 5 HRC

Execution:

Punch head hot upset-forged. Shoulder, shaft and punch diameter fine ground.
Special dimensions on request.

Ordering-code (example):

2711.7G4.0700

Format: Round	
P = ∅ 7,0 mm	= 0700
Punch cutting length: l_1	**Order No**
19 mm	= (4)
Length: l	**Order code character**
100 mm	= (G)
Diameter: d_1	**Order No**
13 mm	= (7)
Type:	**Order No**
ISO	= (1)
Version:	**Order No**
Round	= (1)
Punch:	
with ejector pin	= 27

subject to alterations

Punch, stepped, square, with ejector pin, ISO 8020

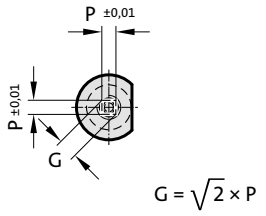

2721.

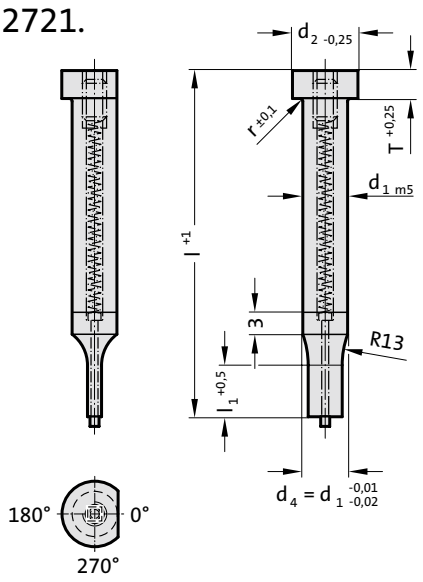



2721. Punch, stepped, square, with ejector pin, ISO 8020

d_1 / (Order No)	d_2	P_{min}	G_{max}	l_1 / (Order No)	r	T	l / (Order Code character)	71 (D)	80 (E)	90 (F)	100 (G)	120 (J)
5 / (3)	8	1.6	4.9	13 (3) 19 (4)	0.3	5		●	●	●	●	●
6 / (4)	9	2.5	5.9	13 (3) 19 (4)	0.3	5		●	●	●	●	●
8 / (5)	11	2.5	7.9	19 (4) 25 (5)	0.3	5		●	●	●	●	●
10 / (6)	13	4	9.9	19 (4) 25 (5)	0.3	5		●	●	●	●	●
13 / (7)	16	5	12.9	19 (4) 25 (5)	0.4	5		●	●	●	●	●
16 / (8)	19	8	15.9	19 (4) 25 (5)	0.4	5		●	●	●	●	●
20 / (9)	23	12	19.9	19 (4) 25 (5)	0.4	5		●	●	●	●	●
25 / (10)	28	16.5	24.9	19 (4) 25 (5)	0.4	5		●	●	●	●	●
32 / (11)	35	20	31.9	25 (5) 30 (6)	0.4	5		●	●	●	●	●

Ordering-code (example):

2 7 2 1 . 10 D 5 . 1 6 5 0 A

Angle:	0°	**Order code character** = (A)
Format: Square, length P	P = 16,5 mm	= 1650
Punch cutting length: l_1	25 mm	**Order No** = (5)
Length: l	71 mm	**Order code character** = (D)
Diameter: d_1	25 mm	**Order No** = (10)
Type:	ISO	**Order No** = (1)
Version:	Square	**Order No** = (2)
Punch:	with ejector pin	= 27

Material:

HSS
Hardness:
Shaft 64 ± 2 HRC
Head 52 ± 5 HRC

Execution:

Punch head hot upset-forged. Shoulder, shaft and punch shape fine ground.
The anti-rotation surface parallel to P = 0° as standard.
Special dimensions on request.

FIBRO

Punch, stepped, rectangular, with ejector pin, ISO 8020



2731.

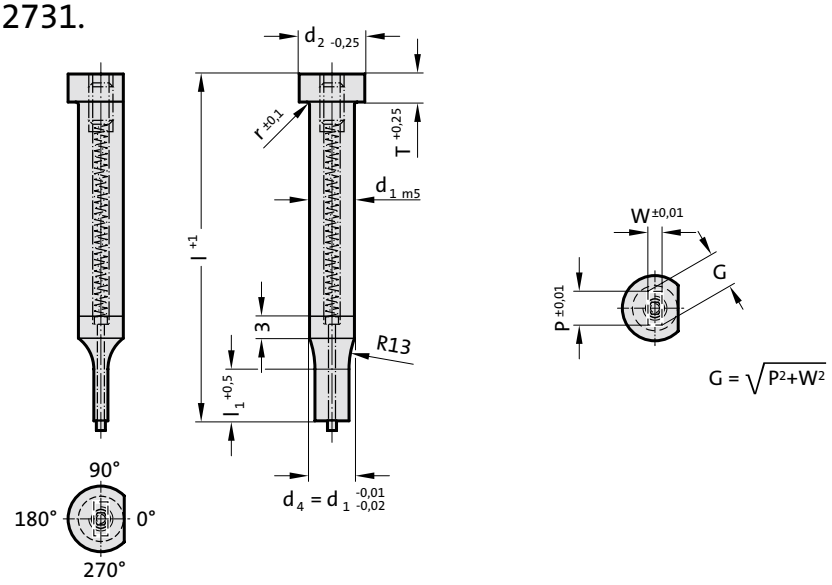

2731. Punch, stepped, rectangular, with ejector pin, ISO 8020

d_1 / (Order No)	d_2	W_{min}	G_{max}	l_1 / (Order No)	r	T	l / (Order Code character)	71 (D)	80 (E)	90 (F)	100 (G)	120 (J)
5 / (3)	8	1.6	4.9	13 (3) 19 (4)	0.3	5		●	●	●	●	●
6 / (4)	9	2.5	5.9	13 (3) 19 (4)	0.3	5		●	●	●	●	●
8 / (5)	11	2.5	7.9	19 (4) 25 (5)	0.3	5		●	●	●	●	●
10 / (6)	13	4	9.9	19 (4) 25 (5)	0.3	5		●	●	●	●	●
13 / (7)	16	5	12.9	19 (4) 25 (5)	0.4	5		●	●	●	●	●
16 / (8)	19	8	15.9	19 (4) 25 (5)	0.4	5		●	●	●	●	●
20 / (9)	23	12	19.9	19 (4) 25 (5)	0.4	5		●	●	●	●	●
25 / (10)	28	16.5	24.9	19 (4) 25 (5)	0.4	5		●	●	●	●	●
32 / (11)	35	20	31.9	25 (5) 30 (6)	0.4	5		●	●	●	●	●

Material:

HSS
Hardness:
Shaft 64 ± 2 HRC
Head 52 ± 5 HRC

Execution:

Punch head hot upset-forged. Shoulder, shaft and punch shape fine ground.
The anti-rotation surface parallel to P = 0° as standard.
Special dimensions on request.

Ordering-code (example):

2731.9F4.1504.1210B

Angle:	**Order code character**
90°	= (B)
Format: Rectangular, width W	
W = 12,1 mm	= 1210
Format: Rectangular, length P	
P = 15,04 mm	= 1504
Punch cutting length: l_1	**Order No**
19 mm	= (4)
Length: l	**Order code character**
90 mm	= (F)
Diameter: d_1	**Order No**
20 mm	= (9)
Type:	**Order No**
ISO	= (1)
Version:	**Order No**
Rectangular	= (3)
Punch:	
with ejector pin	= 27

subject to alterations

Punch, stepped, slot, with ejector pin, ISO 8020

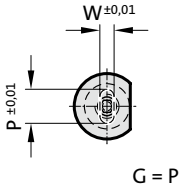

2741.

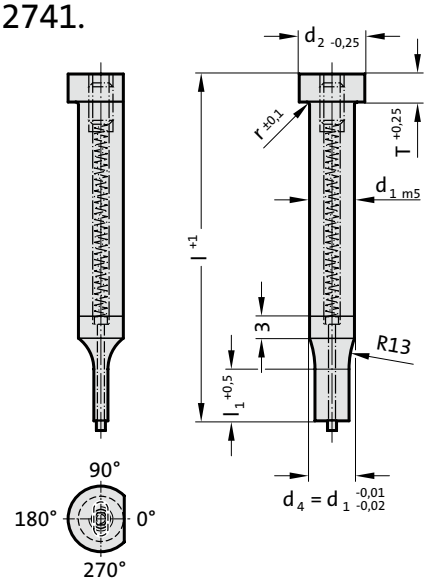



2741. Punch, stepped, slot, with ejector pin, ISO 8020

d_1 / (Order No)	d_2	W_{min}	G_{max}	l_1 / (Order No)	r	T	l / (Order Code character)	71 (D)	80 (E)	90 (F)	100 (G)	120 (J)
5 / (3)	8	1.6	4.9	13 (3) 19 (4)	0.3	5		●	●	●	●	●
6 / (4)	9	2.5	5.9	13 (3) 19 (4)	0.3	5		●	●	●	●	●
8 / (5)	11	2.5	7.9	19 (4) 25 (5)	0.3	5		●	●	●	●	●
10 / (6)	13	4	9.9	19 (4) 25 (5)	0.3	5		●	●	●	●	●
13 / (7)	16	5	12.9	19 (4) 25 (5)	0.4	5		●	●	●	●	●
16 / (8)	19	8	15.9	19 (4) 25 (5)	0.4	5		●	●	●	●	●
20 / (9)	23	12	19.9	19 (4) 25 (5)	0.4	5		●	●	●	●	●
25 / (10)	28	16.5	24.9	19 (4) 25 (5)	0.4	5		●	●	●	●	●
32 / (11)	35	20	31.9	25 (5) 30 (6)	0.4	5		●	●	●	●	●

Ordering-code (example):

2 7 4 1 . 10 D 4 . 2 0 4 0 . 1 6 5 0 B

	Angle	**Order code character**
B	90°	= (B)
	Format: Slot, width W	
1650	W = 16,5 mm	= 1650
	Format: Slot, length P	
2040	P = 20,4 mm	= 2040
	Punch cutting length: l_1	**Order No**
4	19 mm	= (4)
	Length: l	**Order code character**
D	71 mm	= (D)
	Diameter: d_1	**Order No**
10	25 mm	= (10)
	Type:	**Order No**
1	ISO	= (1)
	Version:	**Order No**
4	Slot	= (4)
	Punch:	
27	with ejector pin	= 27

Material:

HSS
Hardness:
Shaft 64 ± 2 HRC
Head 52 ± 5 HRC

Execution:

Punch head hot upset-forged. Shoulder, shaft and punch shape fine ground.
The anti-rotation surface parallel to P = 0° as standard.
Special dimensions on request.

FIBRO

Punch, stepped, rectangle with radiussed corners, with ejector pin, ISO 8020



2751.

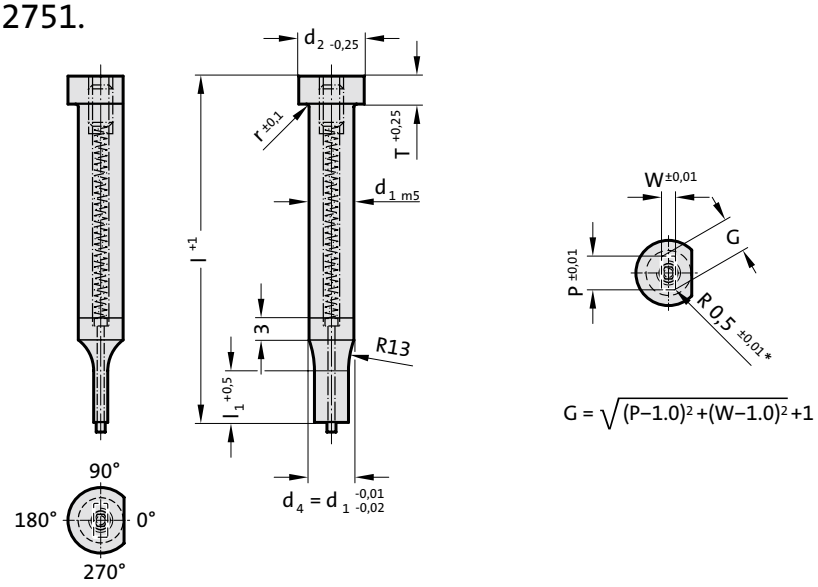

2751. Punch, stepped, rectangle with radiussed corners, with ejector pin, ISO 8020

d_1 / (Order No)	d_2	W_{min}	G_{max}	l_1 / (Order No)	r	T	l / (Order Code character)	71 (D)	80 (E)	90 (F)	100 (G)	120 (J)
5 / (3)	8	1.6	4.9	13 (3) 19 (4)	0.3	5		●	●	●	●	●
6 / (4)	9	2.5	5.9	13 (3) 19 (4)	0.3	5		●	●	●	●	●
8 / (5)	11	2.5	7.9	19 (4) 25 (5)	0.3	5		●	●	●	●	●
10 / (6)	13	4	9.9	19 (4) 25 (5)	0.3	5		●	●	●	●	●
13 / (7)	16	5	12.9	19 (4) 25 (5)	0.4	5		●	●	●	●	●
16 / (8)	19	8	15.9	19 (4) 25 (5)	0.4	5		●	●	●	●	●
20 / (9)	23	12	19.9	19 (4) 25 (5)	0.4	5		●	●	●	●	●
25 / (10)	28	16.5	24.9	19 (4) 25 (5)	0.4	5		●	●	●	●	●
32 / (11)	35	20	31.9	25 (5) 30 (6)	0.4	5		●	●	●	●	●

Material:

HSS
Hardness:
Shaft 64 ± 2 HRC
Head 52 ± 5 HRC

Execution:

Punch head hot upset-forged. Shoulder, shaft and punch shape fine ground.
The anti-rotation surface parallel to P = 0° as standard.
Special dimensions on request.
* For other radius options, see standardised special shapes.

Ordering-code (example):

2751.9F4.1540.1210B

Angle:	**Order code character**
90°	= (B)
Format: Rectangle with radiused corners, width W	
W = 12,1 mm	= 1210
Format: Rectangle with radiused corners, length P	
P = 15,4 mm	= 1540
Punch cutting length: l_1	**Order No**
19 mm	= (4)
Length: l	**Order code character**
90 mm	= (F)
Diameter: d_1	**Order No**
20 mm	= (9)
Type:	**Order No**
ISO	= (1)
Version:	**Order No**
Rectangle with radiused corners	= (5)
Punch:	
with ejector pin	= 27

subject to alterations

Pilot pin with tapered tip, ISO 8020

2261.

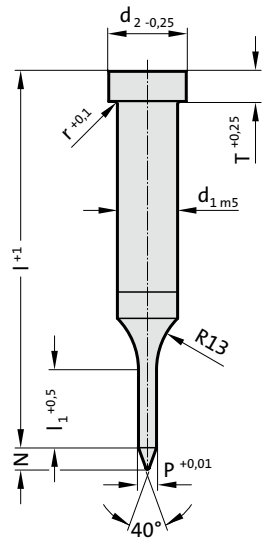



2261. Pilot pin with tapered tip, ISO 8020

d_1 / (Order No)	d_2	T	P	l_1 / (Order No)	N	l / (Order Code character)	63 (C)	71 (D)	80 (E)	90 (F)	100 (G)	110 (H)	125 (K)	140 (I)
5 / (3)	8	5	1,0-4,9	13 (3)	4		●	●						
6 / (4)	9	5	1,6-5,9	13 (3)	5		●	●	●					
8 / (5)	11	5	2,5-7,9	13 (3)	6		●	●	●	●				
10 / (6)	13	5	4,0-9,9	13 (3) 19 (4)	8		●	●	●	●	●	●		
13 / (7)	16	5	5,0-12.9	13 (3) 19 (4)	10		●	●	●	●	●	●	●	
16 / (8)	19	5	8,0-15.9	13 (3) 19 (4) 25 (5)	15			●	●	●	●	●	●	●
20 / (9)	23	5	12,0-19.9	13 (3) 19 (4) 25 (5)	20			●	●	●	●	●	●	●
25 / (10)	28	5	16,5-24.9	13 (3) 19 (4) 25 (5)	25			●	●	●	●	●	●	●
32 / (11)	35	5	20,0-31.9	19 (4) 25 (5)	30				●	●	●	●	●	●

Ordering-code (example):

2 2 6 1 . 10 D 3 . 1 7 5 0

Format: Round		
P = Ø 17,5 mm	= 1750	
Punch cutting length: l_1	**Order No**	
13 mm	= (3)	
Length: l	**Order code character**	
71 mm	= (D)	
Diameter: d_1	**Order No**	
25 mm	= (10)	
Type:	**Order No**	
ISO	= (1)	
Version:	**Order No**	
Pilot pin with tapered tip	= (6)	
Punch:		
without ejector pin	= 22	

Material:

HSS
Hardness:
Shaft 64 ± 2 HRC
Head 52 ± 5 HRC

Execution:

Head hot upset-forged. Shoulder, shaft and pilot fine ground.
Special dimensions on request.

FIBRO

Pilot pin with parabolic tip, ISO 8020



2271.

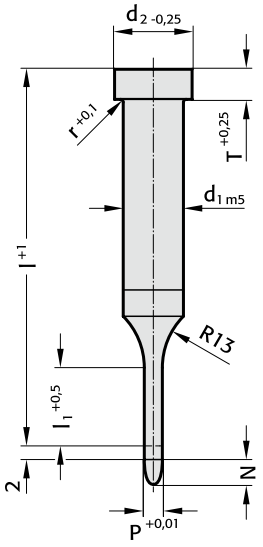

2271. Pilot pin with parabolic tip, ISO 8020

d_1 / (Order No)	d_2	T	P	l_1 / (Order No)	l / (Order Code character)	50 (A)	56 (B)	63 (C)	71 (D)	80 (E)	90 (F)	100 (G)
5 / (3)	8	5	1,0-4,9	10 (2) 13 (3)		●	●	●	●			
6 / (4)	9	5	1,6-5,9	10 (2) 13 (3)		●	●	●	●	●		
8 / (5)	11	5	2,5-7,9	10 (2) 13 (3)		●	●	●	●	●		
10 / (6)	13	5	4,0-9,9	10 (2) 13 (3) 19 (4)		●	●	●	●	●	●	●
13 / (7)	16	5	5,0-12.9	10 (2) 13 (3) 19 (4)		●	●	●	●	●	●	●
16 / (8)	19	5	8,0-15.9	13 (3) 19 (4)		●	●	●	●	●	●	●
20 / (9)	23	5	12,0-19.9	13 (3) 19 (4)			●	●	●	●	●	●
25 / (10)	28	5	16,5-24.9	13 (3) 19 (4)			●	●	●	●	●	●
32 / (11)	35	5	20,0-31.9	19 (4)					●	●	●	●

Material:

HSS
Hardness:
Shaft 64 ± 2 HRC
Head 52 ± 5 HRC

Execution:

Head hot upset-forged, shoulder, shaft and pilot fine ground.
Special dimensions on request.

Note:

The 2 mm length provides full guidance before the blanking punch contacts the sheet metal.

Length of parabolic tip N:
= 8 mm where P ≤ 10 mm
=12 mm where P 10,1 mm - 15 mm
=15 mm where P > 15 mm

Ordering-code (example):

2 2 7 1 . 10 D 3 . 1 7 5 0

Format: Round	
P = ∅ 17,5 mm	= 1750
Punch cutting length: l_1	**Order No**
13 mm	= (3)
Length: l	**Order code character**
71 mm	= (D)
Diameter: d_1	**Order No**
25 mm	= (10)
Type:	**Order No**
ISO	= (1)
Version:	**Order No**
Pilot pin with parabolic tip	= (7)
Punch:	
without ejector pin	= 22

subject to alterations

Pilot unit to Mercedes-Benz Standard

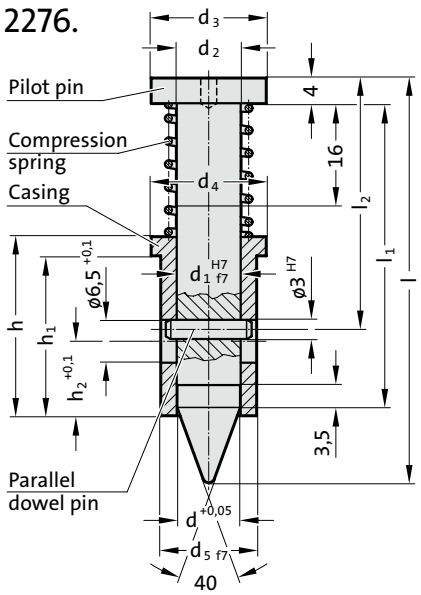



2276. Pilot unit to Mercedes-Benz Standard

Order No	d	d_1	d_2	d_3	d_4	d_5	h	h_1	h_2	l_1	l_2	l	Spring force preloaded [daN]	Spring force compressed [daN]
2276.1.A.0980	9.8	10	10	18	18	15	28	25	12	47.5	39.3	63.2	4.9	6.2
2276.2.B.1580	15.8	16	16	24	30	26	28	25	12	54.5	46.3	72.5	4.8	5.6

Ordering-code (example):

2 2 7 6 . 1 . A . 0 9 8 0

Diameter: d	
9,8 mm	= 0980
15,8 mm	= 1580
Length: l	**Order code character**
63,2 mm	= (A)
72,5 mm	= (B)
Diameter: d_1	**Order No**
10 mm	= (1)
16 mm	= (2)
Standard:	**Order No**
Mercedes	= (6)
Version:	**Order No**
Pilot pin	= (7)
	= 22

Description:

The pilot unit provides exact positioning of sheet metal parts.
There are 2 sizes.
The pilot unit 10 can used for a hole diameter of 5 to 10 mm and is available as a finished item, 9.8 mm diameter.
The pilot unit 16 is used for diameter > 10 - 16 mm and is available as a blank, 15.8 mm diameter.
Smaller diameters have to be ground by the tool making department.

Note:

The pilot unit consists of:
Pilot pin, sleeve, compression spring, dowel pin.



Precision Matrixes

Ordering example
Matrixes

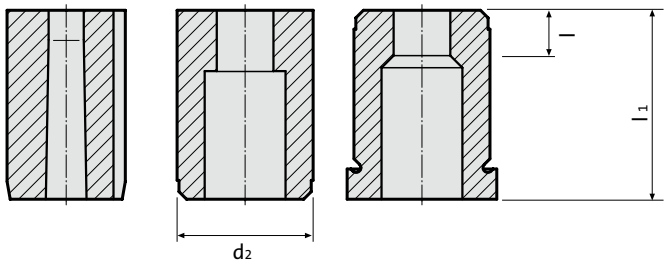

NB: See table for standard dimensions
Special dimensions to order

2 6 4 6 . 1 0 F 6 . 1 3 5 0 . 0 6 5 0 A 2

Format: Slot length P = 13,5 mm

Format: Slot width W = 6,5 mm

Matrixes:
26 = matrixes

Version:	Order No
blank (pilot hole bore)	= 0
round	= 1
square	= 2
rectangular	= 3
slot	= 4
rectangle with radiused corners	= 5
special shapes	= 9

Type:	Order No
automotive standard	= 5
without shoulder ISO 8977	= 6
with shoulder ISO 8977	= 7

Shape cutting length: l	Order No
2	= 1
3	= 2
4	= 3
5	= 4
6	= 5
8	= 6
10	= 7
12	= 8
special	= X

Diameter: d_2	Order No
5	= 1
6	= 2
8	= 3
10	= 4
13	= 5
16	= 6
20	= 7
22	= 8
25	= 9
32	= 10
38	= 11
40	= 12
45	= 13
50	= 14
56	= 15
63	= 16
71	= 17
76	= 18
85	= 19
90	= 20
100	= 21

Length: l_1	Order Code character
13	= A
16	= B
20	= C
22	= D
25	= E
28	= F
30	= G
32	= H
35	= J
40	= K
special	= X

Angle:	Order Code character
0°	= A
90°	= B
180°	= C
270°	= D
special	= X

Anti-rotation element:	Order No
pin ∅3	= 1
pin ∅4	= 2
pin ∅6	= 3
polished surface (continuous)	= 4
polished surface top, 14 mm	= 5
polished surface bottom, 14 mm	= 6
special	= X

Ordering Code (Example):

2646.10F6.1350.0650 A2

- Anti-rotation element: Pin ∅ = 4 mm (2)
- Angle = 0° (A)
- Format: Slot width W = 6,5 mm (0650)
- Format: Slot length P = 13,5 mm (1350)
- Shape cutting length: l = 8 mm (6)
- Length: l_1 = 28 mm (F)
- Diameter: d_2 = 32 mm (10)
- Type = without shoulder ISO 8977 (6)
- Version: Slot (4)
- Matrixes: Matrixes (26)

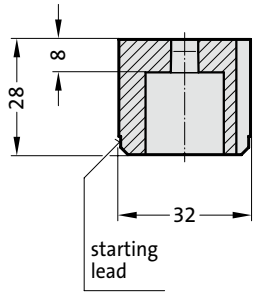

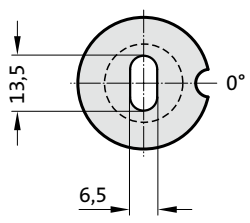

subject to alterations

Matrix without shoulder, blank, ISO 8977

2606.

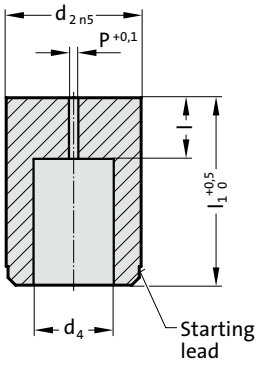



2606. Matrix without shoulder, blank, ISO 8977

d_2 / (Order No)	d_4	P	l / (Order No)	l_1 / (Order Code character)	16 (B)	20 (C)	22 (D)	25 (E)	28 (F)	30 (G)	32 (H)	35 (J)	40 (K)
5 / (1)	2.8	0.8	2 / (1)		●	●	●	●	●	●	●	●	
6 / (2)	3.5	1	3 / (2)		●	●	●	●	●	●	●	●	
8 / (3)	4	1	4 / (3)		●	●	●	●	●	●	●	●	
10 / (4)	5.8	1	4 / (3) 8 / (6)		●	●	●	●	●	●	●	●	
13 / (5)	8	1.2	5 / (4) 8 / (6)			●	●	●	●	●	●	●	
16 / (6)	9.5	1.2	5 / (4) 8 / (6)			●	●	●	●	●	●	●	
20 / (7)	12	1.5	8 / (6) 12 / (8)			●	●	●	●	●	●	●	
22 / (8)	15	1.5	8 / (6) 12 / (8)			●	●	●	●	●	●	●	
25 / (9)	17.3	1.5	8 / (6) 12 / (8)			●	●	●	●	●	●	●	
32 / (10)	20.7	1.5	8 / (6) 12 / (8)			●	●	●	●	●	●	●	
40 / (12)	27.7	1.5	8 / (6) 12 / (8)					●	●	●	●	●	
50 / (14)	37	1.5	8 / (6) 12 / (8)					●	●	●	●	●	●

Ordering-code (example):

2 6 0 6 . 10 F 8

Shape cutting length: l		**Order No**
12 mm		= (8)
Length: l_1		**Order code character**
28 mm		= (F)
Diameter: d_2		**Order No**
32 mm		= (10)
Type:		**Order No**
without sholder		
ISO 8977		= (6)
Version:		**Order No**
Blank (pilot hole bore)		= (0)
Matrix		= 26

Material:

HSS
Hardness 62 ± 2 HRC

Execution:

Diameter d_2, starting lead and face surfaces ground.
Diameter P is a bored pilot hole for wire EDM.
Special dimensions on request.

FIBRO

Matrix without shoulder, round, ISO 8977



2616.

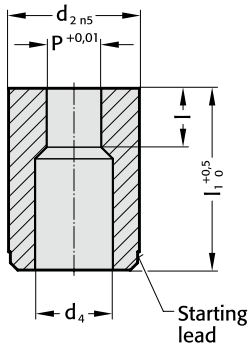

2616. Matrix without shoulder, round, ISO 8977

d_2 / (Order No)	d_4	P	l / (Order No)	l_1 / (Order Code character)	16 (B)	20 (C)	22 (D)	25 (E)	28 (F)	30 (G)	32 (H)	35 (J)	40 (K)
5 / (1)	2.8	1,0-2,4	2 / (1)		●	●	●	●	●	●	●	●	
6 / (2)	3.5	1,6-3,0	3 / (2)		●	●	●	●	●	●	●	●	
8 / (3)	4	2,0-3,5	4 / (3)		●	●	●	●	●	●	●	●	
10 / (4)	5.8	2,5-5,0	4 / (3) 8 / (6)		●	●	●	●	●	●	●	●	
13 / (5)	8	4,0-7,0	5 / (4) 8 / (6)			●	●	●	●	●	●	●	
16 / (6)	9.5	6,0-9,0	5 / (4) 8 / (6)			●	●	●	●	●	●	●	
20 / (7)	12	8,0-11,0	8 / (6) 12 / (8)			●	●	●	●	●	●	●	
22 / (8)	15	9,0-14,0	8 / (6) 12 / (8)			●	●	●	●	●	●	●	
25 / (9)	17.3	10,7-16,0	8 / (6) 12 / (8)			●	●	●	●	●	●	●	
32 / (10)	20.7	15,0-20,0	8 / (6) 12 / (8)			●	●	●	●	●	●	●	
40 / (12)	27.7	19,0-27,0	8 / (6) 12 / (8)					●	●	●	●	●	
50 / (14)	37	26,0-36,0	8 / (6) 12 / (8)					●	●	●	●	●	●

Material:

HSS
Hardness 62 ± 2 HRC

Execution:

Diameter d_2, starting lead and face surfaces ground.
Special dimensions on request.

Ordering-code (example): without anti-rotation element

2 6 1 6 . 10 F 8 . 1 5 1 0

Format: Round	
P = Ø 15,1 mm	= 1510
Shape cutting length: l	**Order No**
12 mm	= (8)
Length: l_1	**Order code character**
28 mm	= (F)
Diameter: d_2	**Order No**
32 mm	= (10)
Type:	**Order No**
without sholder	
ISO 8977	= (6)
Version:	**Order No**
Round	= (1)
Matrix	= 26

subject to alterations

Precision Matrixes without shoulder, cylindrical , ISO 8977
Anti-rotation elements

anti-rotation element 1 (1)

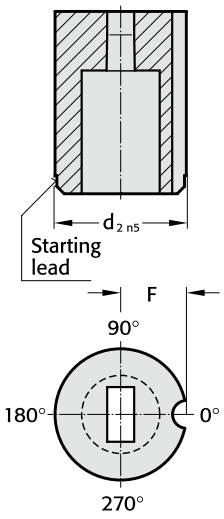

Pin ∅3	
d_2	F
10	5
13	6,5
16	8
20	10
22	11
25	12,5
32	16
40	20
50	25

anti-rotation element 2 (2)

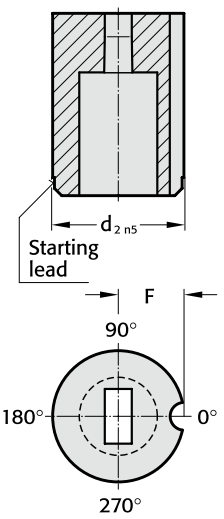

Pin ∅4	
d_2	F
10	6
13	7,2
16	8
20	10
22	11
25	12,5
32	16
40	20
50	25

anti-rotation element 3 (3)

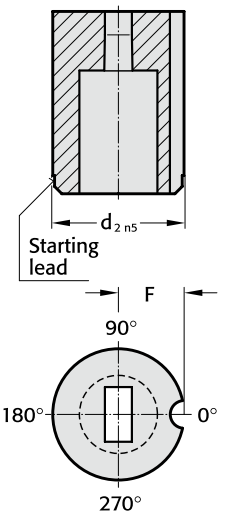

Pin ∅6	
d_2	F
10	7
13	8,2
16	9
20	11
22	12
25	13,5
32	16
40	20
50	25

anti-rotation element 4 (4)

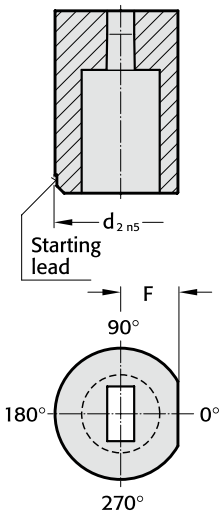

d_2	F
10	4
13	5,5
16	7
20	8,5
22	9,5
25	11
32	14
40	18
50	23

anti-rotation element 5 (5)

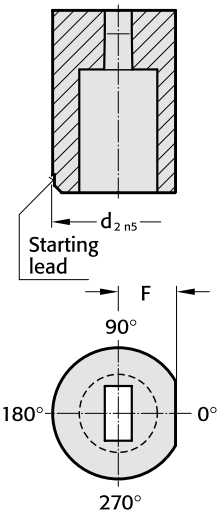

d_2	F
10	4
13	5,5
16	7
20	8,5
22	9,5
25	11
32	14
40	18
50	23

anti-rotation element 6 (6)

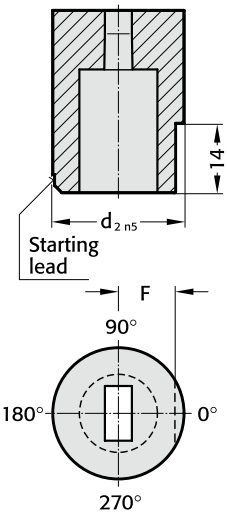

d_2	F
10	4
13	5,5
16	7
20	8,5
22	9,5
25	11
32	14
40	18
50	23

Ordering example: with anti-rotation element from $d_2 \geq 10$ mm

2616.10F8.1510A4

Anti-rotation element: Polished surface (continuous)	**Order No** = (4)
Angle: 0°	**Order Code character** = (A)
Format: Round P = ø15,1 mm	= (1510)
Punch cutting length: l 12 mm	**Order No** = (8)
Length: l_1 28 mm	**Order Code character** = (F)
Diameter: d_2 32 mm	**Order No** = (10)
Type: without shoulder ISO 8977	**Order No** = (6)
Version: Round	**Order No** = (1)
Matrixes: 26 Matrixes	

Matrix without shoulder, square, ISO 8977



2626.

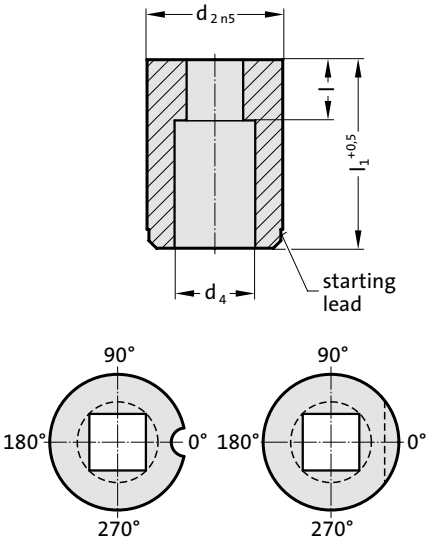

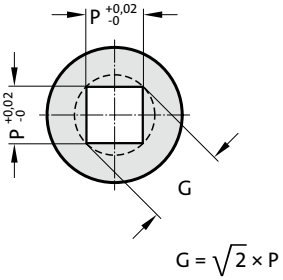

2626. Matrix without shoulder, square, ISO 8977

d_2 / (Order No)	d_4	P_{min}	G_{max}	l / (Order No)	l_1 / (Order Code character)	16 (B)	20 (C)	22 (D)	25 (E)	28 (F)	30 (G)	32 (H)	35 (J)	40 (K)
10 / (4)	5.8	1.2	5	4 / (3) 8 / (6)		●	●	●	●	●	●	●	●	
13 / (5)	8	2	7	5 / (4) 8 / (6)			●	●	●	●	●	●	●	
16 / (6)	9.5	2.4	9	5 / (4) 8 / (6)			●	●	●	●	●	●	●	
20 / (7)	12	3.2	11	8 / (6) 12 / (8)			●	●	●	●	●	●	●	
22 / (8)	15	4	14	8 / (6) 12 / (8)			●	●	●	●	●	●	●	
25 / (9)	17.3	4.8	16	8 / (6) 12 / (8)			●	●	●	●	●	●	●	
32 / (10)	20.7	5.5	20	8 / (6) 12 / (8)			●	●	●	●	●	●	●	
40 / (12)	27.7	6.4	27	8 / (6) 12 / (8)					●	●	●	●	●	
50 / (14)	37	9	36	8 / (6) 12 / (8)					●	●	●	●	●	●

Material:

HSS
Hardness 62 ± 2 HRC

Execution:

Diameter d_2, starting lead and face surfaces ground.
Special dimensions on request.

Ordering-code (example): with anti-rotation element

2 6 2 6 . 10 F 8 . 1 3 5 0 A 3

Anti-rotation element:	**Order No**
Pin Ø 6 mm	= (3)
Angle:	**Order code character**
0°	= (A)
Format: Square, length P	
P = 13,5 mm	= 1350
Shape cutting length: l	**Order No**
12 mm	= (8)
Length: l_1	**Order code character**
28 mm	= (F)
Diameter: d_2	**Order No**
32 mm	= (10)
Type:	**Order No**
without shoulder ISO8977	= (6)
Version:	**Order No**
Square	= (2)
Matrix	= 26

Precision Matrixes without shoulder, cylindrical , ISO 8977
Anti-rotation elements

anti-rotation element 1 (1)

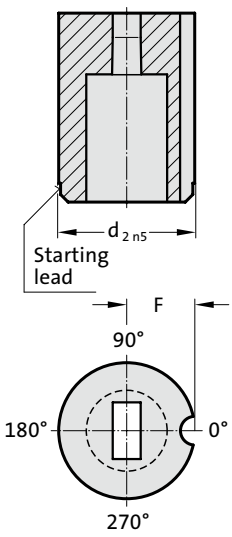

Pin ∅3	
d_2	F
10	5
13	6,5
16	8
20	10
22	11
25	12,5
32	16
40	20
50	25

anti-rotation element 2 (2)

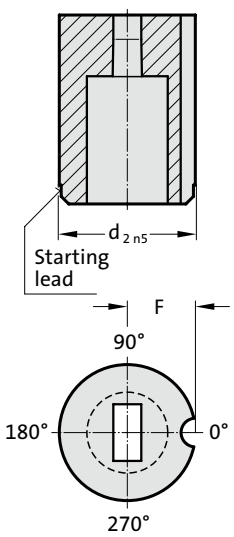

Pin ∅4	
d_2	F
10	6
13	7,2
16	8
20	10
22	11
25	12,5
32	16
40	20
50	25

anti-rotation element 3 (3)

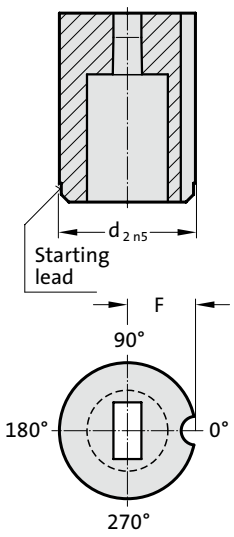

Pin ∅6	
d_2	F
10	7
13	8,2
16	9
20	11
22	12
25	13,5
32	16
40	20
50	25

anti-rotation element 4 (4)

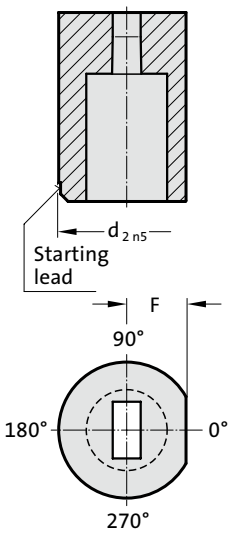

d_2	F
10	4
13	5,5
16	7
20	8,5
22	9,5
25	11
32	14
40	18
50	23

anti-rotation element 5 (5)

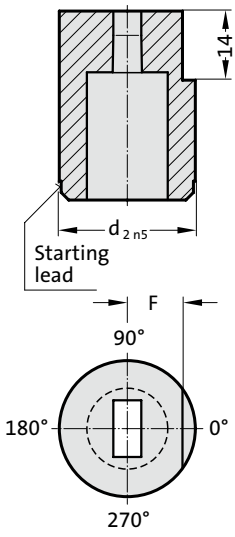

d_2	F
10	4
13	5,5
16	7
20	8,5
22	9,5
25	11
32	14
40	18
50	23

anti-rotation element 6 (6)

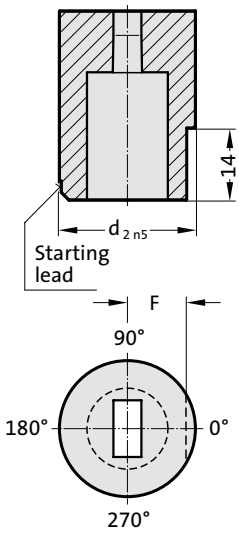

d_2	F
10	4
13	5,5
16	7
20	8,5
22	9,5
25	11
32	14
40	18
50	23

Matrix without shoulder, rectangular, ISO 8977



2636.

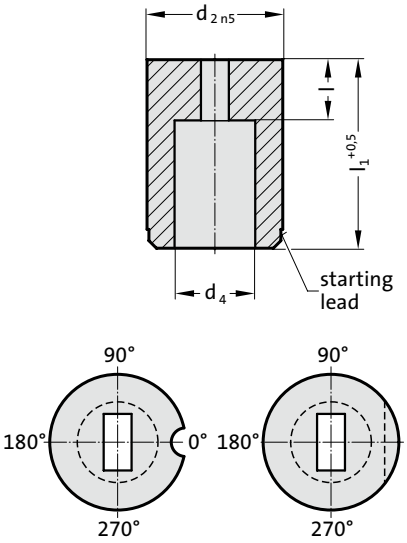

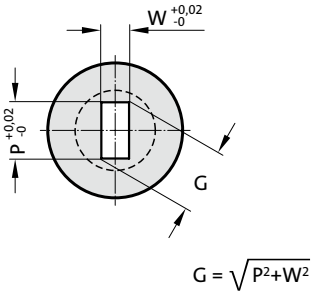

2636. Matrix without shoulder, rectangular, ISO 8977

d_2 / (Order No)	d_4	W_{min}	G_{max}	l / (Order No)	l_1 / (Order Code character)	16 (B)	20 (C)	22 (D)	25 (E)	28 (F)	30 (G)	32 (H)	35 (J)	40 (K)
10 / (4)	5.8	1.2	5	4 / (3) 8 / (6)		●	●	●	●	●	●	●	●	
13 / (5)	8	2	7	5 / (4) 8 / (6)			●	●	●	●	●	●	●	
16 / (6)	9.5	2.4	9	5 / (4) 8 / (6)			●	●	●	●	●	●	●	
20 / (7)	12	3.2	11	8 / (6) 12 / (8)			●	●	●	●	●	●	●	
22 / (8)	15	4	14	8 / (6) 12 / (8)			●	●	●	●	●	●	●	
25 / (9)	17.3	4.8	16	8 / (6) 12 / (8)			●	●	●	●	●	●	●	
32 / (10)	20.7	5.5	20	8 / (6) 12 / (8)			●	●	●	●	●	●	●	
40 / (12)	27.7	6.4	27	8 / (6) 12 / (8)					●	●	●	●	●	
50 / (14)	37	9	36	8 / (6) 12 / (8)					●	●	●	●	●	●

Material:

HSS
Hardness 62 ± 2 HRC

Execution:

Diameter d_2, starting lead and face surfaces ground.
Special dimensions on request.

Ordering-code (example): with anti-rotation element

2 6 3 6 . 10 F 8 . 1 3 5 0 . 0 6 5 0 A 4

Anti-rotation element: Polished surface (continuous)	**Order No** = (4)
Angle: 0°	**Order code character** = (A)
Format: Rectangle, width W W = 6,5 mm	= 0650
Format: Rectangle, length P P = 13,5 mm	= 1350
Shape cutting length: l 12 mm	**Order No** = (8)
Length: l_1 28 mm	**Order code character** = (F)
Diameter: d_2 32 mm	**Order No** = (10)
Type: without shoulder ISO8977	**Order No** = (6)
Version: Rectangle	**Order No** = (3)
Matrix	= 26

subject to alterations

Precision Matrixes without shoulder, cylindrical , ISO 8977
Anti-rotation elements

anti-rotation element 1 (1)

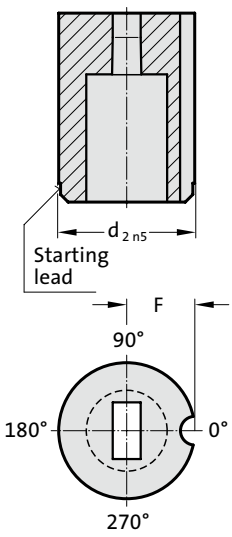

Pin ∅3	
d_2	F
10	5
13	6,5
16	8
20	10
22	11
25	12,5
32	16
40	20
50	25

anti-rotation element 2 (2)

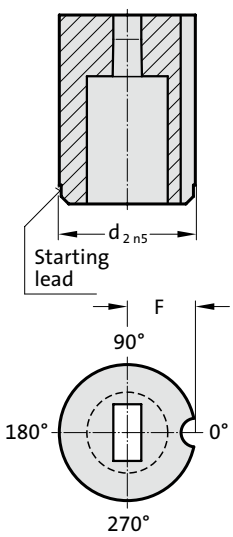

Pin ∅4	
d_2	F
10	6
13	7,2
16	8
20	10
22	11
25	12,5
32	16
40	20
50	25

anti-rotation element 3 (3)

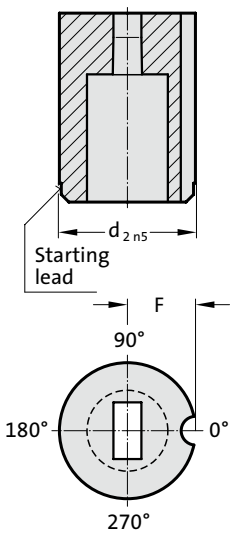

Pin ∅6	
d_2	F
10	7
13	8,2
16	9
20	11
22	12
25	13,5
32	16
40	20
50	25

anti-rotation element 4 (4)

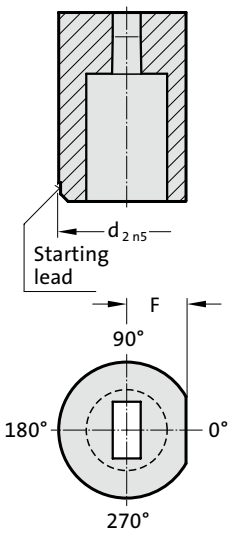

d_2	F
10	4
13	5,5
16	7
20	8,5
22	9,5
25	11
32	14
40	18
50	23

anti-rotation element 5 (5)

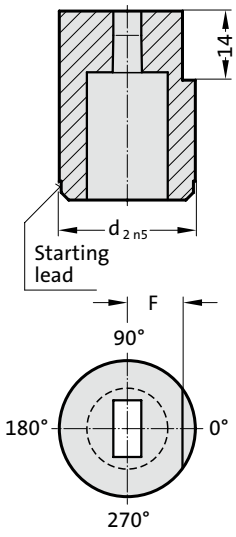

d_2	F
10	4
13	5,5
16	7
20	8,5
22	9,5
25	11
32	14
40	18
50	23

anti-rotation element 6 (6)

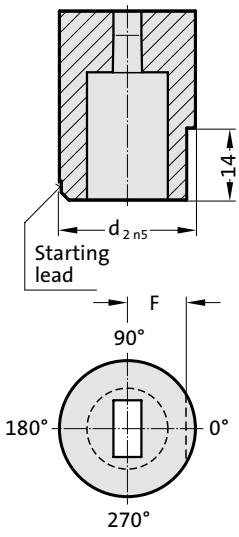

d_2	F
10	4
13	5,5
16	7
20	8,5
22	9,5
25	11
32	14
40	18
50	23

FIBRO

Matrix without shoulder, slot, ISO 8977



2646.

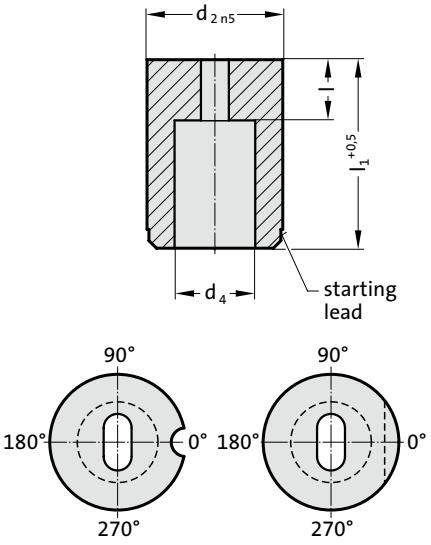

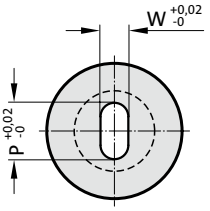

G = P

2646. Matrix without shoulder, slot, ISO 8977

d_2 / (Order No)	d_4	W_{min}	G_{max}	l / (Order No)	l_1 / (Order Code character)	16 (B)	20 (C)	22 (D)	25 (E)	28 (F)	30 (G)	32 (H)	35 (J)	40 (K)
10 / (4)	5.8	1.2	5	4 / (3) 8 / (6)		●	●	●	●	●	●	●	●	
13 / (5)	8	2	7	5 / (4) 8 / (6)			●	●	●	●	●	●	●	
16 / (6)	9.5	2.4	9	5 / (4) 8 / (6)			●	●	●	●	●	●	●	
20 / (7)	12	3.2	11	8 / (6) 12 / (8)			●	●	●	●	●	●	●	
22 / (8)	15	4	14	8 / (6) 12 / (8)			●	●	●	●	●	●	●	
25 / (9)	17.3	4.8	16	8 / (6) 12 / (8)			●	●	●	●	●	●	●	
32 / (10)	20.7	5.5	20	8 / (6) 12 / (8)			●	●	●	●	●	●	●	
40 / (12)	27.7	6.4	27	8 / (6) 12 / (8)					●	●	●	●	●	
50 / (14)	37	9	36	8 / (6) 12 / (8)					●	●	●	●	●	●

Material:

HSS
Hardness 62 ± 2 HRC

Execution:

Diameter d_2, starting lead and face surfaces ground.
Special dimensions on request.

Ordering-code (example): with anti-rotation element

2646.10F8.1350.0650A3

Anti-rotation element:	**Order No**
Pin Ø 6 mm	= (3)
Angle:	**Order code character**
0°	= (A)
Format: Slot, width W	
W = 6,5 mm	= 0650
Format: Slot, length P	
P = 13,5 mm	= 1350
Shape cutting length: l	**Order No**
12 mm	= (8)
Length: l_1	**Order code character**
28 mm	= (F)
Diameter: d_2	**Order No**
32 mm	= (10)
Type:	**Order No**
without shoulder	
ISO 8977	= (6)
Version:	**Order No**
Slot	= (4)
Matrix	= 26

subject to alterations

Precision Matrixes without shoulder, cylindrical , ISO 8977
Anti-rotation elements

anti-rotation element 1 (1)

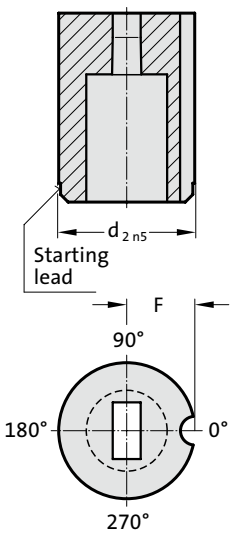

Pin ∅3	
d_2	F
10	5
13	6,5
16	8
20	10
22	11
25	12,5
32	16
40	20
50	25

anti-rotation element 2 (2)

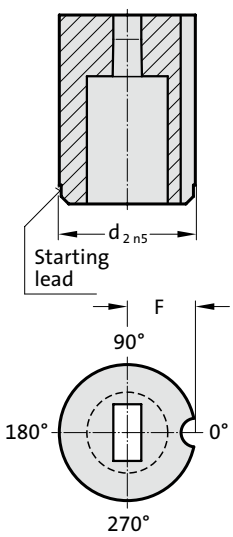

Pin ∅4	
d_2	F
10	6
13	7,2
16	8
20	10
22	11
25	12,5
32	16
40	20
50	25

anti-rotation element 3 (3)

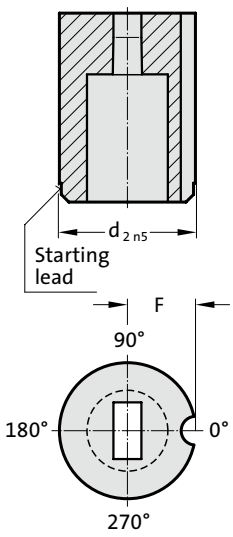

Pin ∅6	
d_2	F
10	7
13	8,2
16	9
20	11
22	12
25	13,5
32	16
40	20
50	25

anti-rotation element 4 (4)

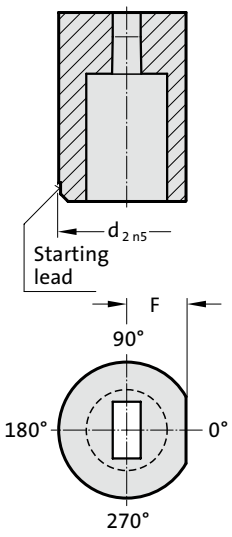

d_2	F
10	4
13	5,5
16	7
20	8,5
22	9,5
25	11
32	14
40	18
50	23

anti-rotation element 5 (5)

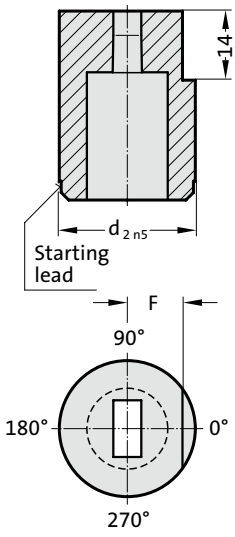

d_2	F
10	4
13	5,5
16	7
20	8,5
22	9,5
25	11
32	14
40	18
50	23

anti-rotation element 6 (6)

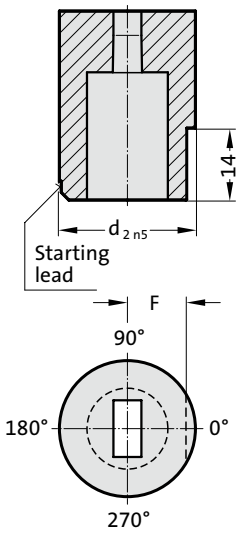

d_2	F
10	4
13	5,5
16	7
20	8,5
22	9,5
25	11
32	14
40	18
50	23

Matrix without shoulder, rectangle with radiussed corners, ISO 8977



2656.

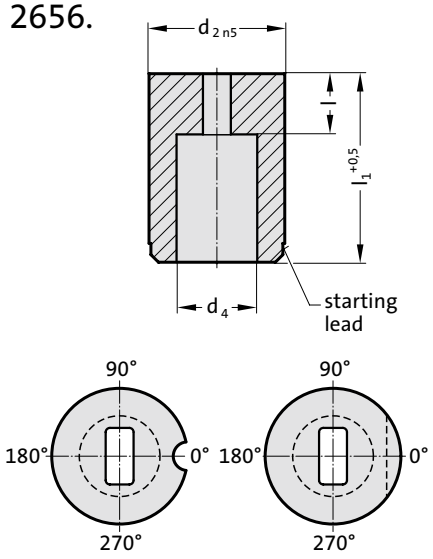

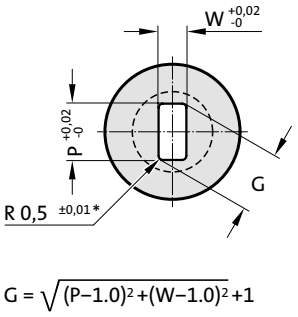

$$G = \sqrt{(P-1.0)^2+(W-1.0)^2}+1$$

2656. Matrix without shoulder, rectangle with radiussed corners, ISO 8977

d_2 / (Order No)	d_4	W_{min}	G_{max}	l / (Order No)	l_1 / (Order Code character)	16 (B)	20 (C)	22 (D)	25 (E)	28 (F)	30 (G)	32 (H)	35 (J)	40 (K)
10 / (4)	5.8	1.2	5	4 / (3) 8 / (6)		●	●	●	●	●	●	●	●	
13 / (5)	8	2	7	5 / (4) 8 / (6)			●	●	●	●	●	●	●	
16 / (6)	9.5	2.4	9	5 / (4) 8 / (6)			●	●	●	●	●	●	●	
20 / (7)	12	3.2	11	8 / (6) 12 / (8)			●	●	●	●	●	●	●	
22 / (8)	15	4	14	8 / (6) 12 / (8)			●	●	●	●	●	●	●	
25 / (9)	17.3	4.8	16	8 / (6) 12 / (8)			●	●	●	●	●	●	●	
32 / (10)	20.7	5.5	20	8 / (6) 12 / (8)			●	●	●	●	●	●	●	
40 / (12)	27.7	6.4	27	8 / (6) 12 / (8)					●	●	●	●	●	
50 / (14)	37	9	36	8 / (6) 12 / (8)					●	●	●	●	●	●

Material:

HSS
Hardness 62 ± 2 HRC

Execution:

Diameter d_2, starting lead and face surfaces ground.
Special dimensions on request.
* For other radius options, see standardised special shapes.

Ordering-code (example): with anti-rotation element

2 6 5 6 . 10 F 8 . 1 3 5 0 . 0 6 5 0 A 3

Anti-rotation element:	**Order No**
Pin Ø 6 mm	= (3)
Angle:	**Order code character**
0°	= (A)
Format: Rectangle with radiused corners, width W	
W = 6,5 mm	= 0650
Format: Rectangle with radiused corners, length P	
P = 13,5 mm	= 1350
Shape cutting length: l	**Order No**
12 mm	= (8)
Length: l_1	**Order code character**
28 mm	= (F)
Diameter: d_2	**Order No**
32 mm	= (10)
Type:	**Order No**
without sholder ISO8977	= (6)
Version:	**Order No**
Rectangle with radiused corners	= (5)
Matrix	= 26

subject to alterations

Precision Matrixes without shoulder, cylindrical , ISO 8977
Anti-rotation elements

anti-rotation element 1 (1)

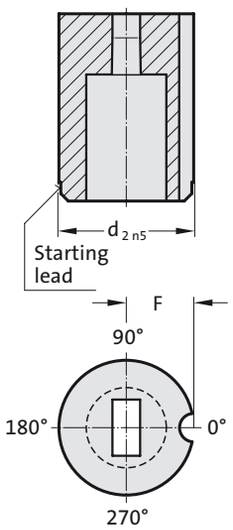

Pin ∅3

d_2	F
10	5
13	6,5
16	8
20	10
22	11
25	12,5
32	16
40	20
50	25

anti-rotation element 2 (2)

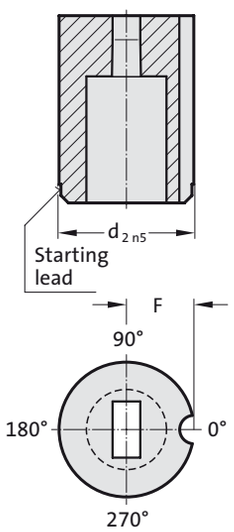

Pin ∅4

d_2	F
10	6
13	7,2
16	8
20	10
22	11
25	12,5
32	16
40	20
50	25

anti-rotation element 3 (3)

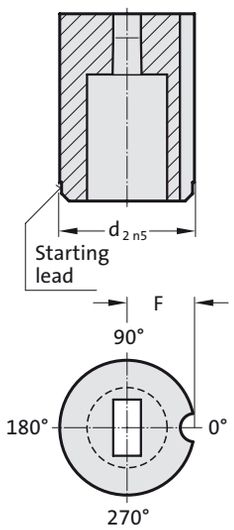

Pin ∅6

d_2	F
10	7
13	8,2
16	9
20	11
22	12
25	13,5
32	16
40	20
50	25

anti-rotation element 4 (4)

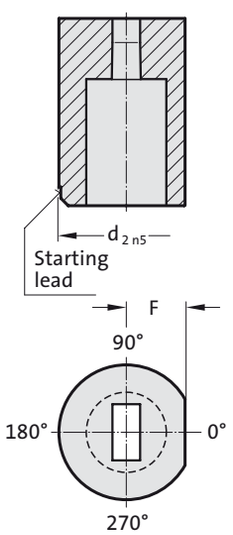

d_2	F
10	4
13	5,5
16	7
20	8,5
22	9,5
25	11
32	14
40	18
50	23

anti-rotation element 5 (5)

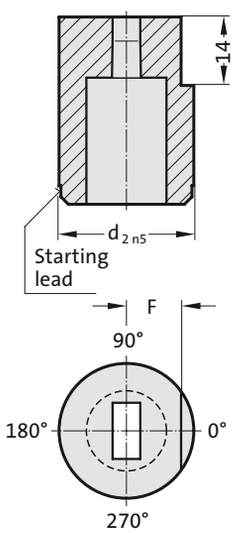

d_2	F
10	4
13	5,5
16	7
20	8,5
22	9,5
25	11
32	14
40	18
50	23

anti-rotation element 6 (6)

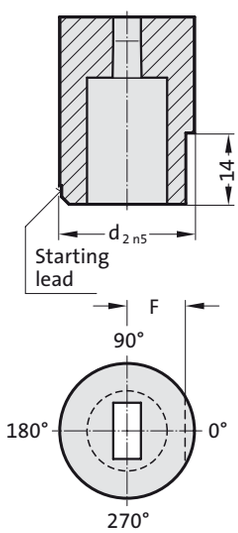

d_2	F
10	4
13	5,5
16	7
20	8,5
22	9,5
25	11
32	14
40	18
50	23

Matrix with shoulder, blank, ISO 8977

2607.

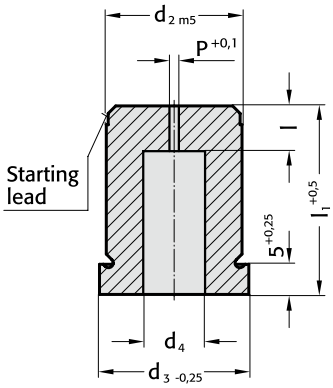



2607. Matrix with shoulder, blank, ISO 8977

d_2 / (Order No)	d_3	d_4	P	l / (Order No)	l_1 / (Order Code character)	16 (B)	20 (C)	22 (D)	25 (E)	28 (F)	30 (G)	32 (H)	35 (J)
5 / (1)	8	2.8	0.8	2 / (1)		●	●	●	●	●	●	●	●
6 / (2)	9	3.5	1	3 / (2)		●	●	●	●	●	●	●	●
8 / (3)	11	4	1	4 / (3)		●	●	●	●	●	●	●	●
10 / (4)	13	5.8	1	4 / (3) 8 / (6)		●	●	●	●	●	●	●	●
13 / (5)	16	8	1.2	5 / (4) 8 / (6)			●	●	●	●	●	●	●
16 / (6)	19	9.5	1.2	5 / (4) 8 / (6)			●	●	●	●	●	●	●
20 / (7)	23	12	1.5	8 / (6) 12 / (8)			●	●	●	●	●	●	●
22 / (8)	25	15	1.5	8 / (6) 12 / (8)			●	●	●	●	●	●	●
25 / (9)	28	17.3	1.5	8 / (6) 12 / (8)			●	●	●	●	●	●	●
32 / (10)	35	20.7	1.5	8 / (6) 12 / (8)			●	●	●	●	●	●	●
40 / (12)	43	27.7	1.5	8 / (6) 12 / (8)			●	●	●	●	●	●	●
50 / (14)	53	37	1.5	8 / (6) 12 / (8)			●	●	●	●	●	●	●

Ordering-code (example):

2 6 0 7 . 10 F 8

Shape cutting length: l	**Order No**
12 mm	= (8)
Length: l_1	**Order code character**
28 mm	= (F)
Diameter: d_2	**Order No**
32 mm	= (10)
Type:	**Order No**
with shoulder	
ISO 8977	= (7)
Version:	**Order No**
Blank (pilot hole bore)	= (0)
Matrix	= 26

Material:

HSS
Hardness 62 ± 2 HRC

Execution:

Diameter d_2, starting lead and face surfaces ground.
Diameter P is a bored pilot hole for wire EDM.
Special dimensions on request.

FIBRO

Matrix with shoulder, round, ISO 8977



2617.

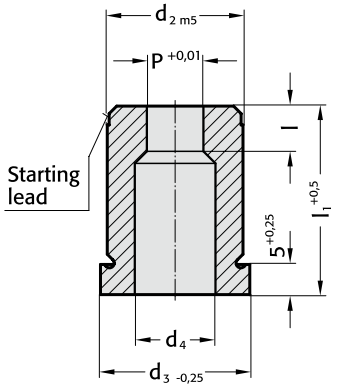

2617. Matrix with shoulder, round, ISO 8977

d_2 / (Order No)	d_3	d_4	P	l / (Order No)	l_1 / (Order Code character)	16 (B)	20 (C)	22 (D)	25 (E)	28 (F)	30 (G)	32 (H)	35 (J)
5 / (1)	8	2.8	1,0-2,4	2 / (1)		●	●	●	●	●	●	●	●
6 / (2)	9	3.5	1,6-3,0	3 / (2)		●	●	●	●	●	●	●	●
8 / (3)	11	4	2,0-3,5	4 / (3)		●	●	●	●	●	●	●	●
10 / (4)	13	5.8	2,5-5,0	4 / (3) 8 / (6)		●	●	●	●	●	●	●	●
13 / (5)	16	8	4,0-7,0	5 / (4) 8 / (6)			●	●	●	●	●	●	●
16 / (6)	19	9.5	6,0-9,0	5 / (4) 8 / (6)			●	●	●	●	●	●	●
20 / (7)	23	12	8,0-11,0	8 / (6) 12 / (8)			●	●	●	●	●	●	●
22 / (8)	25	15	9,0-14,0	8 / (6) 12 / (8)			●	●	●	●	●	●	●
25 / (9)	28	17.3	10,7-16,0	8 / (6) 12 / (8)			●	●	●	●	●	●	●
32 / (10)	35	20.7	15,0-20,0	8 / (6) 12 / (8)			●	●	●	●	●	●	●
40 / (12)	43	27.7	19,0-27,0	8 / (6) 12 / (8)			●	●	●	●	●	●	●
50 / (14)	53	37	26,0-36,0	8 / (6) 12 / (8)			●	●	●	●	●	●	●

Material:

HSS
Hardness 62 ± 2 HRC

Execution:

Diameter d_2, starting lead and face surfaces ground.
Special dimensions on request.

Ordering-code (example): without anti-rotation element

2617.10F8.1510

Format: Round	
P = Ø 15,1 mm	= 1510
Shape cutting length: l	**Order No**
12 mm	= (8)
Length: l_1	**Order code character**
28 mm	= (F)
Diameter: d_2	**Order No**
32 mm	= (10)
Type:	**Order No**
with shoulder	
ISO 8977	= (7)
Version:	**Order No**
Round	= (1)
Matrix	= 26

subject to alterations

Precision Matrixes with shoulder, cylindrical , ISO 8977
Anti-rotation elements

anti-rotation element 1 (1)

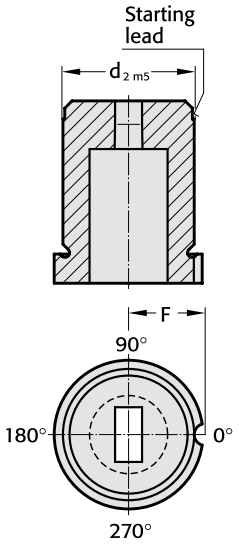

Pin ∅3	
d_2	F
8	5,5
10	6,5
13	8
16	9,5
20	11,5
22	12,5
25	14
32	17,5
40	21,5
50	26,5

anti-rotation element 2 (2)

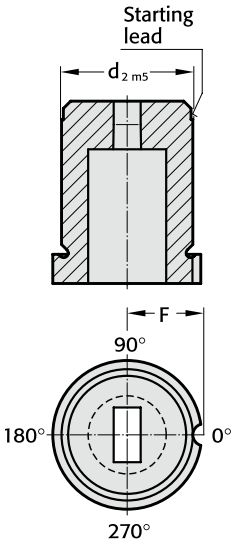

Pin ∅4	
d_2	F
8	6
10	7
13	8,5
16	10
20	12
22	13
25	14,5
32	18
40	22
50	27

anti-rotation element 3 (3)

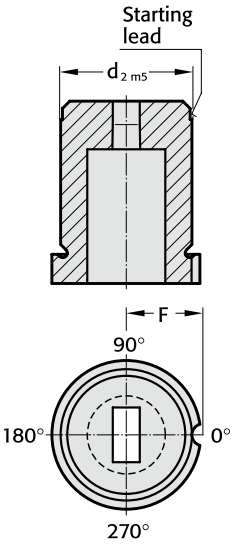

Pin ∅6	
d_2	F
8	7
10	8
13	9,5
16	11
20	13
22	14
25	15,5
32	19
40	23
50	28

anti-rotation element 4 (4)

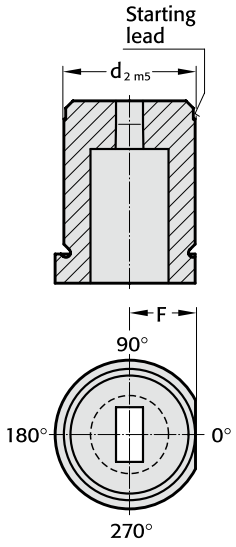

Ordering example: with anti-rotation element from $d_2 \geq 8$ mm

2617.10F8.1510A4

Anti-rotation element: Polished surface (continuous)	**Order No** = (4)
Angle: 0°	**Order Code character** = (A)
Format: Round P = ø15,1 mm	= (1510)
Punch cutting length: l 12 mm	**Order No** = (8)
Length: l_1 28 mm	**Order Code character** = (F)
Diameter: d_2 32 mm	**Order No** = (10)
Type: with shoulder ISO 8977	**Order No** = (7)
Version: Round	**Order No** = (1)
Matrixes: 26 Matrixes	

FIBRO

Matrix with shoulder, square, ISO 8977



2627.

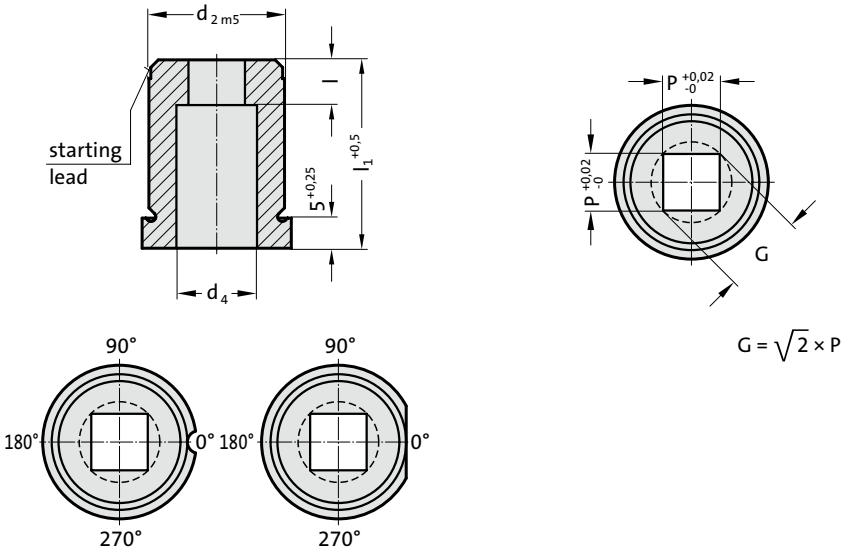

2627. Matrix with shoulder, square, ISO 8977

d_2 / (Order No)	d_3	d_4	P_{min}	G_{max}	l / (Order No)	l_1 / (Order Code character)	16 (B)	20 (C)	22 (D)	25 (E)	28 (F)	30 (G)	32 (H)	35 (J)
8 / (3)	11	4	1.2	3.5	4 / (3)		●	●	●	●	●	●	●	●
10 / (4)	13	5.8	1.2	5	4 / (3) 8 / (6)		●	●	●	●	●	●	●	●
13 / (5)	16	8	2	7	5 / (4) 8 / (6)			●	●	●	●	●	●	●
16 / (6)	19	9.5	2.4	9	5 / (4) 8 / (6)			●	●	●	●	●	●	●
20 / (7)	23	12	3.2	11	8 / (6) 12 / (8)			●	●	●	●	●	●	●
22 / (8)	25	15	4	14	8 / (6) 12 / (8)			●	●	●	●	●	●	●
25 / (9)	28	17.3	4.8	16	8 / (6) 12 / (8)			●	●	●	●	●	●	●
32 / (10)	35	20.7	5.5	20	8 / (6) 12 / (8)			●	●	●	●	●	●	●
40 / (12)	43	27.7	6.4	27	8 / (6) 12 / (8)			●	●	●	●	●	●	●
50 / (14)	53	37	6.4	36	8 / (6) 12 / (8)			●	●	●	●	●	●	●

Material:

HSS
Hardness 62 ± 2 HRC

Execution:

Diameter d_2, starting lead and face surfaces ground.
Special dimensions on request.

Ordering-code (example): with anti-rotation element

2 6 2 7 . 10 F 8 . 1 3 5 0 A 3

Anti-rotation element:	**Order No**
Pin Ø 6 mm	= (3)
Angle:	**Order code character**
0°	= (A)
Format: Square, length P	
P = 13,5 mm	= 1350
Shape cutting length: l	**Order No**
12 mm	= (8)
Length: l_1	**Order code character**
28 mm	= (F)
Diameter: d_2	**Order No**
32 mm	= (10)
Type:	**Order No**
with shoulder	
ISO 8977	= (7)
Version:	**Order No**
Square	= (2)
Matrix	= 26

Precision Matrixes with shoulder, cylindrical , ISO 8977
Anti-rotation elements

anti-rotation element 1 (1)

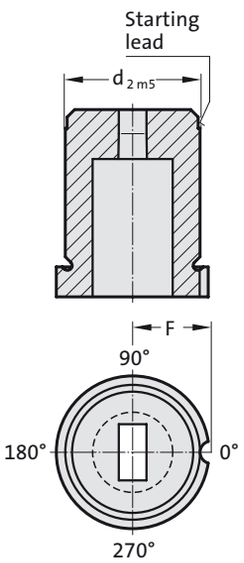

Pin ∅3	
d_2	F
8	5,5
10	6,5
13	8
16	9,5
20	11,5
22	12,5
25	14
32	17,5
40	21,5
50	26,5

anti-rotation element 2 (2)

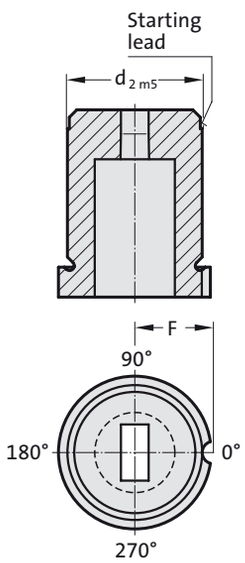

Pin ∅4	
d_2	F
8	6
10	7
13	8,5
16	10
20	12
22	13
25	14,5
32	18
40	22
50	27

anti-rotation element 3 (3)

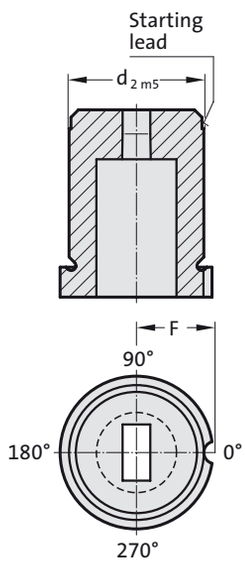

Pin ∅6	
d_2	F
8	7
10	8
13	9,5
16	11
20	13
22	14
25	15,5
32	19
40	23
50	28

anti-rotation element 4 (4)

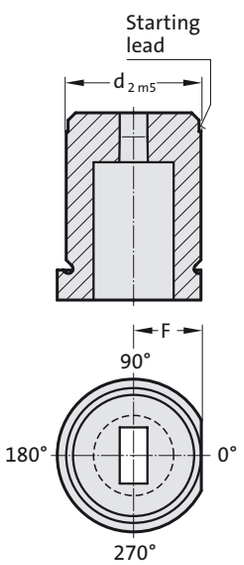

Matrix with shoulder, rectangular, ISO 8977



2637.

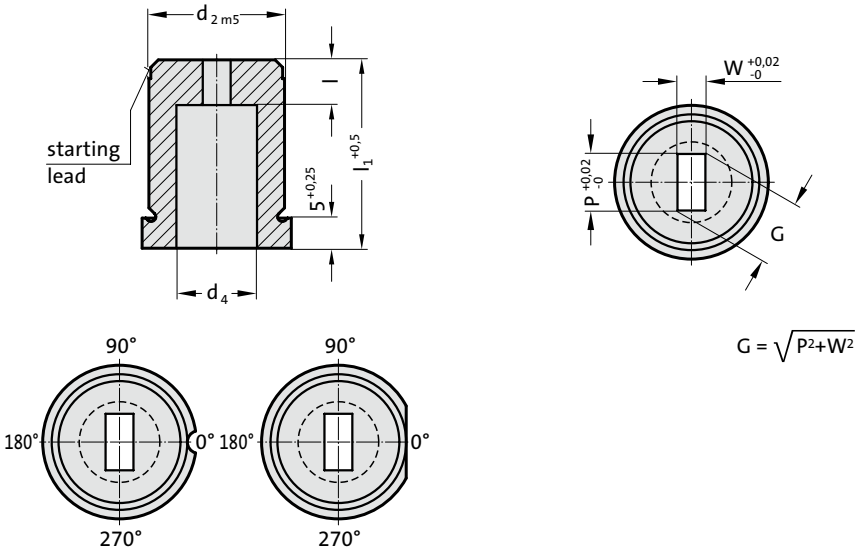

2637. Matrix with shoulder, rectangular, ISO 8977

d_2 / (Order No)	d_3	d_4	W_{min}	G_{max}	l / (Order No)	l_1 / (Order Code character)	16 (B)	20 (C)	22 (D)	25 (E)	28 (F)	30 (G)	32 (H)	35 (J)
8 / (3)	11	4	1.2	3.5	4 / (3)		●	●	●	●	●	●	●	●
10 / (4)	13	5.8	1.2	5	4 / (3) 8 / (6)		●	●	●	●	●	●	●	●
13 / (5)	16	8	2	7	5 / (4) 8 / (6)			●	●	●	●	●	●	●
16 / (6)	19	9.5	2.4	9	5 / (4) 8 / (6)			●	●	●	●	●	●	●
20 / (7)	23	12	3.2	11	8 / (6) 12 / (8)			●	●	●	●	●	●	●
22 / (8)	25	15	4	14	8 / (6) 12 / (8)			●	●	●	●	●	●	●
25 / (9)	28	17.3	4.8	16	8 / (6) 12 / (8)			●	●	●	●	●	●	●
32 / (10)	35	20.7	5.5	20	8 / (6) 12 / (8)			●	●	●	●	●	●	●
40 / (12)	43	27.7	6.4	27	8 / (6) 12 / (8)			●	●	●	●	●	●	●
50 / (14)	53	37	6.4	36	8 / (6) 12 / (8)			●	●	●	●	●	●	●

Material:

HSS
Hardness 62 ± 2 HRC

Execution:

Diameter d_2, starting lead and face surfaces ground.
Special dimensions on request.

Ordering-code (example): with anti-rotation element

2 6 3 7 . 1 0 F 8 . 1 3 5 0 . 0 6 5 0 A 2

Anti-rotation element:	**Order No**
Pin Ø 4 mm	= (2)
Angle:	**Order code character**
0°	= (A)
Format: Rectangle, width W	
W = 6,5 mm	= 0650
Format: Rectangle, length P	
P = 13,5 mm	= 1350
Shape cutting length: l	**Order No**
12 mm	= (8)
Length: l_1	**Order code character**
28 mm	= (F)
Diameter: d_2	**Order No**
32 mm	= (10)
Type:	**Order No**
with shoulder	
ISO 8977	= (7)
Version:	**Order No**
Rectangle	= (3)
Matrix	= 26

Precision Matrixes with shoulder, cylindrical , ISO 8977
Anti-rotation elements

anti-rotation element 1 (1)

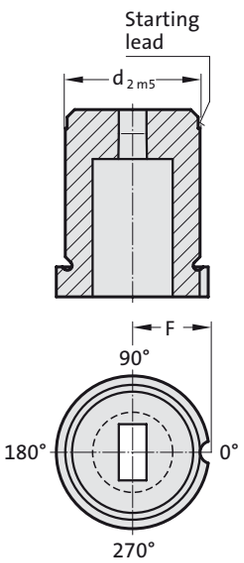

Pin ∅3	
d_2	F
8	5,5
10	6,5
13	8
16	9,5
20	11,5
22	12,5
25	14
32	17,5
40	21,5
50	26,5

anti-rotation element 2 (2)

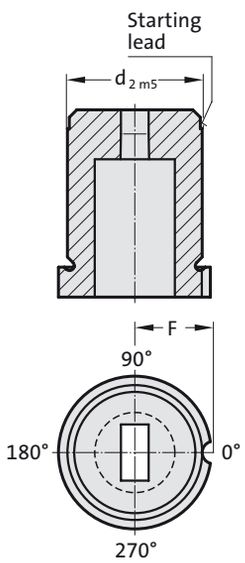

Pin ∅4	
d_2	F
8	6
10	7
13	8,5
16	10
20	12
22	13
25	14,5
32	18
40	22
50	27

anti-rotation element 3 (3)

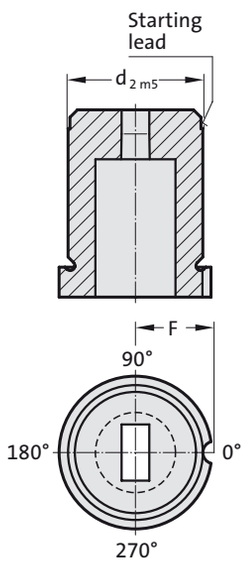

Pin ∅6	
d_2	F
8	7
10	8
13	9,5
16	11
20	13
22	14
25	15,5
32	19
40	23
50	28

anti-rotation element 4 (4)

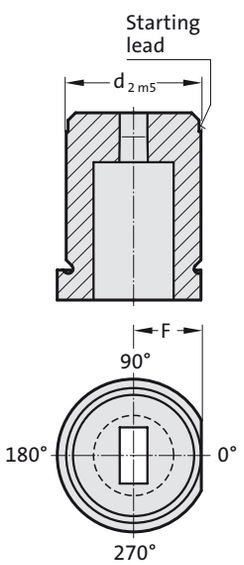

Matrix with shoulder, slot, ISO 8977



2647.

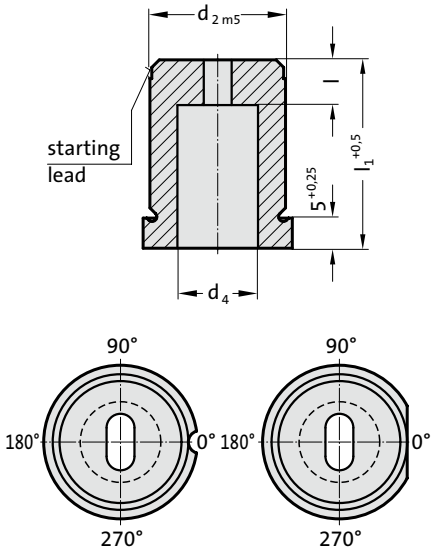

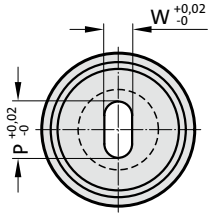

G = P

2647. Matrix with shoulder, slot, ISO 8977

d_2 / (Order No)	d_3	d_4	W_{min}	G_{max}	l / (Order No)	l_1 / (Order Code character)	16 (B)	20 (C)	22 (D)	25 (E)	28 (F)	30 (G)	32 (H)	35 (J)
8 / (3)	11	4	1.2	3.5	4 / (3)		●	●	●	●	●	●	●	●
10 / (4)	13	5.8	1.2	5	4 / (3) 8 / (6)		●	●	●	●	●	●	●	●
13 / (5)	16	8	2	7	5 / (4) 8 / (6)			●	●	●	●	●	●	●
16 / (6)	19	9.5	2.4	9	5 / (4) 8 / (6)			●	●	●	●	●	●	●
20 / (7)	23	12	3.2	11	8 / (6) 12 / (8)			●	●	●	●	●	●	●
22 / (8)	25	15	4	14	8 / (6) 12 / (8)			●	●	●	●	●	●	●
25 / (9)	28	17.3	4.8	16	8 / (6) 12 / (8)			●	●	●	●	●	●	●
32 / (10)	35	20.7	5.5	20	8 / (6) 12 / (8)			●	●	●	●	●	●	●
40 / (12)	43	27.7	6.4	27	8 / (6) 12 / (8)			●	●	●	●	●	●	●
50 / (14)	53	37	6.4	36	8 / (6) 12 / (8)			●	●	●	●	●	●	●

Material:

HSS
Hardness 62 ± 2 HRC

Execution:

Diameter d_2, starting lead and face surfaces ground.
Special dimensions on request.

Ordering-code (example): with anti-rotation element

2 6 4 7 . 1 0 F 8 . 1 3 5 0 . 0 6 5 0 A 2

Anti-rotation element:	**Order No**
Pin Ø 4 mm	= (2)
Angle:	**Order code character**
0°	= (A)
Format: Slot, width W	
W = 6,5 mm	= 0650
Format: Slot, length P	
P = 13,5 mm	= 1350
Shape cutting length: l	**Order No**
12 mm	= (8)
Length: l_1	**Order code character**
28 mm	= (F)
Diameter: d_2	**Order No**
32 mm	= (10)
Type:	**Order No**
with shoulder	
ISO 8977	= (7)
Version:	**Order No**
Slot	= (4)
Matrix	= 26

Precision Matrixes with shoulder, cylindrical , ISO 8977
Anti-rotation elements

anti-rotation element 1 (1)

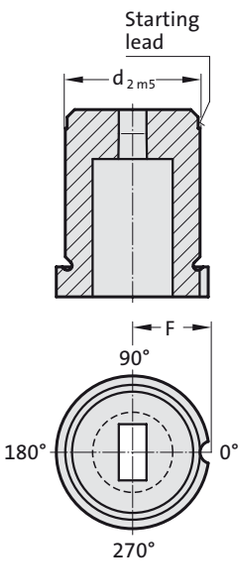

Pin ∅3	
d_2	F
8	5,5
10	6,5
13	8
16	9,5
20	11,5
22	12,5
25	14
32	17,5
40	21,5
50	26,5

anti-rotation element 2 (2)

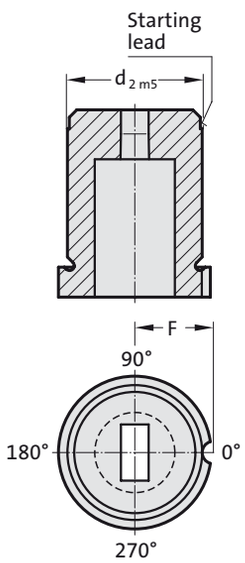

Pin ∅4	
d_2	F
8	6
10	7
13	8,5
16	10
20	12
22	13
25	14,5
32	18
40	22
50	27

anti-rotation element 3 (3)

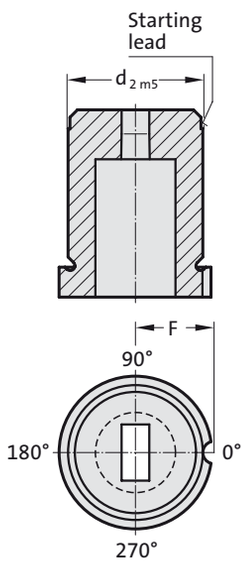

Pin ∅6	
d_2	F
8	7
10	8
13	9,5
16	11
20	13
22	14
25	15,5
32	19
40	23
50	28

anti-rotation element 4 (4)

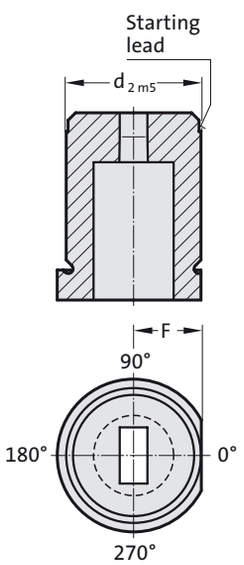

FIBRO

Matrix with shoulder, rectangle with radiussed corners, ISO 8977



2657.

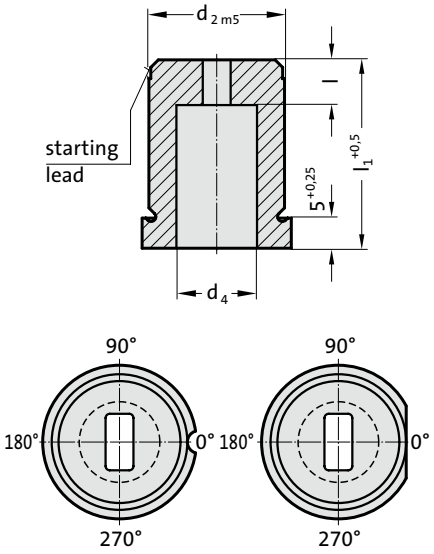

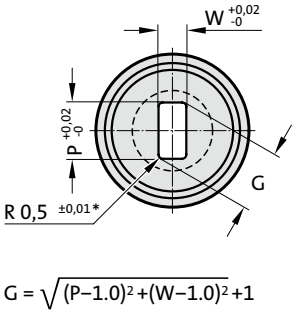

$$G = \sqrt{(P-1.0)^2+(W-1.0)^2}+1$$

2657. Matrix with shoulder, rectangle with radiussed corners, ISO 8977

d_2 / (Order No)	d_3	d_4	W_{min}	G_{max}	l / (Order No)	l_1 / (Order Code character)	16 (B)	20 (C)	22 (D)	25 (E)	28 (F)	30 (G)	32 (H)	35 (J)
8 / (3)	11	4	1.2	3.5	4 / (3)		●	●	●	●	●	●	●	●
10 / (4)	13	5.8	1.2	5	4 / (3) 8 / (6)		●	●	●	●	●	●	●	●
13 / (5)	16	8	2	7	5 / (4) 8 / (6)			●	●	●	●	●	●	●
16 / (6)	19	9.5	2.4	9	5 / (4) 8 / (6)			●	●	●	●	●	●	●
20 / (7)	23	12	3.2	11	8 / (6) 12 / (8)			●	●	●	●	●	●	●
22 / (8)	25	15	4	14	8 / (6) 12 / (8)			●	●	●	●	●	●	●
25 / (9)	28	17.3	4.8	16	8 / (6) 12 / (8)			●	●	●	●	●	●	●
32 / (10)	35	20.7	5.5	20	8 / (6) 12 / (8)			●	●	●	●	●	●	●
40 / (12)	43	27.7	6.4	27	8 / (6) 12 / (8)			●	●	●	●	●	●	●
50 / (14)	53	37	6.4	36	8 / (6) 12 / (8)			●	●	●	●	●	●	●

Material:

HSS
Hardness 62 ± 2 HRC

Execution:

Diameter d_2, starting lead and face surfaces ground.
Special dimensions on request.
* For other radius options, see standardised special shapes.

Ordering-code (example): with anti-rotation element

2657.10F8.1350.0650A3

Anti-rotation element:	**Order No**
Pin Ø 6 mm	= (3)
Angle:	**Order code character**
0°	= (A)
Format: Rectangle with radiused corners, width W	
W = 6,5 mm	= 0650
Format: Rectangle with radiused corners, length P	
P = 13,5 mm	= 1350
Shape cutting length: l	**Order No**
12 mm	= (8)
Length: l_1	**Order code character**
28 mm	= (F)
Diameter: d_2	**Order No**
32 mm	= (10)
Type:	**Order No**
with shoulder	
ISO 8977	= (7)
Version:	**Order No**
Rectangle with radiused corners	= (5)
Matrix	= 26

Precision Matrixes with shoulder, cylindrical , ISO 8977
Anti-rotation elements

anti-rotation element 1 (1)

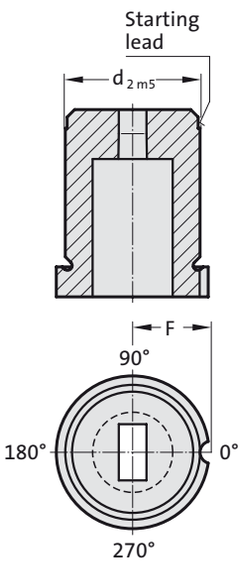

Pin ∅3	
d_2	F
8	5,5
10	6,5
13	8
16	9,5
20	11,5
22	12,5
25	14
32	17,5
40	21,5
50	26,5

anti-rotation element 2 (2)

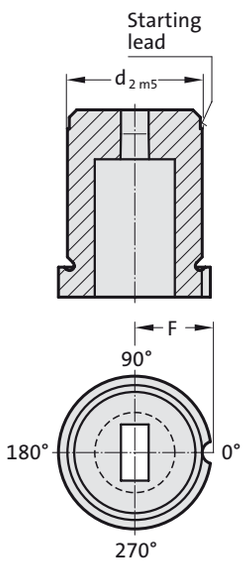

Pin ∅4	
d_2	F
8	6
10	7
13	8,5
16	10
20	12
22	13
25	14,5
32	18
40	22
50	27

anti-rotation element 3 (3)

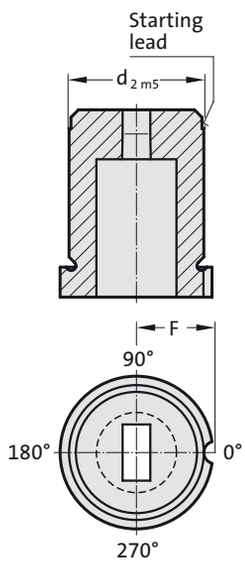

Pin ∅6	
d_2	F
8	7
10	8
13	9,5
16	11
20	13
22	14
25	15,5
32	19
40	23
50	28

anti-rotation element 4 (4)

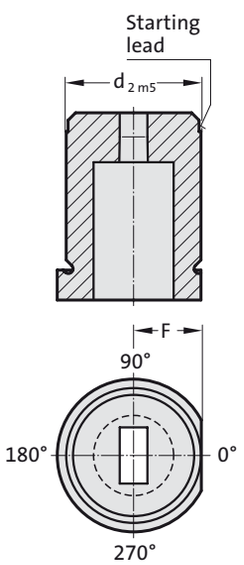

FIBRO

Matrix without shoulder, blank, Automotive Standard



2605.

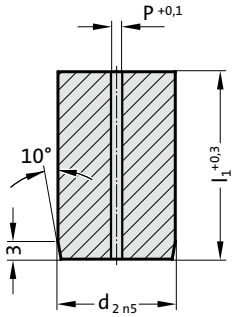

2605. Matrix without shoulder, blank, Automotive Standard

d_2 / (Order No)	P	l_1 / (Order Code character)	13 (A)	16 (B)	20 (C)	22 (D)	25 (E)	28 (F)	30 (G)	32 (H)	35 (J)	40 (K)
10 / (4)	0.8		●	●	●	●	●	●	●	●	●	
13 / (5)	0.8		●	●	●	●	●	●	●	●	●	
16 / (6)	1.5				●	●	●	●	●	●	●	
20 / (7)	2.4				●	●	●	●	●	●	●	
22 / (8)	3				●	●	●	●	●	●	●	
25 / (9)	3				●	●	●	●	●	●	●	
32 / (10)	3				●	●	●	●	●	●	●	
38 / (11)	3				●	●	●	●	●	●	●	●
40 / (12)	3					●	●	●	●	●	●	●
45 / (13)	3					●	●	●	●	●	●	●
50 / (14)	3					●	●	●	●	●	●	●
56 / (15)	3					●	●	●	●	●	●	●
63 / (16)	3					●	●	●	●	●	●	●
71 / (17)	3					●	●	●	●	●	●	●
76 / (18)	3						●	●	●	●	●	●
85 / (19)	3						●	●	●	●	●	●
90 / (20)	3						●	●	●	●	●	●
100 / (21)	3						●	●	●	●	●	●

Material:

HSS
Hardness 62 ± 2 HRC

Execution:

Diameter d_2 and end faces ground.
Diameter P is a bored pilot hole for wire EDM.
Special dimensions on request.

Ordering example:

2 6 0 5 . 10 F

Length: l_1 28 mm		**Order Code character** = (F)
Diameter: d_2 32 mm		**Order No** = (10)
Type: without shoulder Automotive Standard		**Order No** = (5)
Version: Blank (pilot hole bore)		**Order No** = (0)
Matrix		= 26

subject to alterations

Matrix without shoulder, round, Automotive Standard

Anti-rotation element 3 (3)

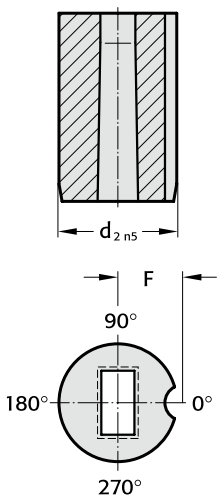

Pin ∅6	
d_2	F
10	7
13	8,2
16	9
20	11
22	12
25	13,5
32	16
38	19
40	20
45	22,5
50	25
56	28
63	31,5
71	35,5
76	38
85	42,5
90	45
100	50

2615.

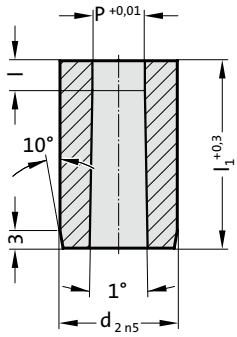



2615. Matrix without shoulder, round, Automotive Standard

d_2 / (Order No)	P	l / (Order No)	l_1 / (Order Code character)	13 (A)	16 (B)	20 (C)	22 (D)	25 (E)	28 (F)	30 (G)	32 (H)	35 (J)	40 (K)
10 / (4)	1,6-6,8	3 / (2) 4 / (3) 5 / (4)		●	●	●	●	●	●	●	●	●	
13 / (5)	3,0-8,8	3 / (2) 5 / (4) 8 / (6)		●	●	●	●	●	●	●	●	●	
16 / (6)	7,4-10,8	3 / (2) 5 / (4) 8 / (6)				●	●	●	●	●	●	●	
20 / (7)	9,5-13,6	3 / (2) 6 / (5) 10 / (7)				●	●	●	●	●	●	●	
22 / (8)	10,5-15,0	3 / (2) 6 / (5) 10 / (7)				●	●	●	●	●	●	●	
25 / (9)	12,0-17,0	3 / (2) 6 / (5) 10 / (7)				●	●	●	●	●	●	●	
32 / (10)	16,0-22,0	3 / (2) 6 / (5) 12 / (8)				●	●	●	●	●	●	●	
38 / (11)	18,0-27,0	3 / (2) 8 / (6) 12 / (8)				●	●	●	●	●	●	●	●
40 / (12)	18,0-27,0	3 / (2) 8 / (6) 12 / (8)					●	●	●	●	●	●	●
45 / (13)	18,0-35,0	3 / (2) 8 / (6) 12 / (8)					●	●	●	●	●	●	●
50 / (14)	18,0-40,0	3 / (2) 8 / (6) 12 / (8)					●	●	●	●	●	●	●
56 / (15)	18,0-45,0	3 / (2) 8 / (6) 12 / (8)					●	●	●	●	●	●	●
63 / (16)	18,0-50,0	3 / (2) 8 / (6) 12 / (8)					●	●	●	●	●	●	●
71 / (17)	18,0-56,0	3 / (2) 8 / (6) 12 / (8)					●	●	●	●	●	●	●
76 / (18)	25,0-60,0	3 / (2) 8 / (6) 12 / (8)						●	●	●	●	●	●
85 / (19)	25,0-66,0	3 / (2) 8 / (6) 12 / (8)						●	●	●	●	●	●
90 / (20)	32,0-70,0	3 / (2) 8 / (6) 12 / (8)						●	●	●	●	●	●
100 / (21)	32,0-78,0	3 / (2) 8 / (6) 12 / (8)						●	●	●	●	●	●

Ordering example: without / with anti-rotation element

2615.10F8.2190 / A3

anti-rotation element:	Pin ∅ 6	**Order No** = (3)
Angle:	0°	**Order Code character** = (A)
Format: Round	P = ∅ 21,9 mm	= (2190)
Shape cutting length: l	12 mm	**Order No** = (8)
Length: l_1	28 mm	**Order Code character** = (F)
Diameter: d_2	32 mm	**Order No** = (10)
Type: without shoulder	Automotive Standard	**Order No** = (5)
Version:	Round	**Order No** = (1)
	Matrix	= 26

Material:

HSS
Hardness 62 ± 2 HRC

Execution:

Diameter d_2 and end faces ground.
Special dimensions on request.

Matrix without shoulder, square, Automotive Standard



2625.

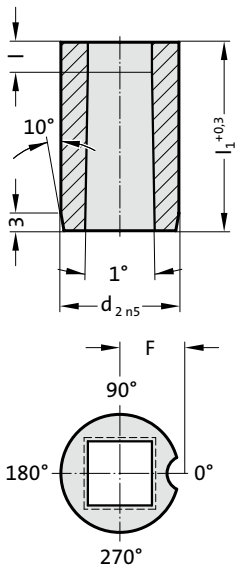

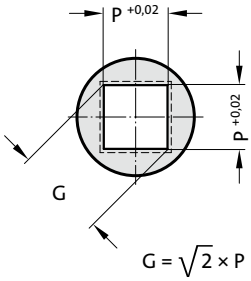

2625. Matrix without shoulder, square, Automotive Standard

d_2 / (Order No)	P_{min}	G_{max}	F	l / (Order No)	l_1 / (Order Code character)	13 (A)	16 (B)	20 (C)	22 (D)	25 (E)	28 (F)	30 (G)	32 (H)	35 (J)	40 (K)
10 / (4)	1.3	6.8	7	3 / (2) 4 / (3) 5 / (4)		●	●	●	●	●	●	●	●	●	
13 / (5)	1.9	8.8	8.2	3 / (2) 5 / (4) 8 / (6)		●	●	●	●	●	●	●	●	●	
16 / (6)	1.9	10.8	9	3 / (2) 5 / (4) 8 / (6)				●	●	●	●	●	●	●	
20 / (7)	1.9	13.6	11	3 / (2) 6 / (5) 10 / (7)				●	●	●	●	●	●	●	
22 / (8)	1.9	15	12	3 / (2) 6 / (5) 10 / (7)				●	●	●	●	●	●	●	
25 / (9)	1.9	17	13.5	3 / (2) 6 / (5) 10 / (7)				●	●	●	●	●	●	●	
32 / (10)	1.9	22	16	3 / (2) 6 / (5) 12 / (8)				●	●	●	●	●	●	●	
38 / (11)	1.9	27	19	3 / (2) 8 / (6) 12 / (8)				●	●	●	●	●	●	●	●
40 / (12)	1.9	27	20	3 / (2) 8 / (6) 12 / (8)					●	●	●	●	●	●	●
45 / (13)	2.4	35	22.5	3 / (2) 8 / (6) 12 / (8)					●	●	●	●	●	●	●
50 / (14)	4	40	25	3 / (2) 8 / (6) 12 / (8)					●	●	●	●	●	●	●
56 / (15)	4	45	28	3 / (2) 8 / (6) 12 / (8)					●	●	●	●	●	●	●
63 / (16)	4	50	31.5	3 / (2) 8 / (6) 12 / (8)					●	●	●	●	●	●	●
71 / (17)	4	56	35.5	3 / (2) 8 / (6) 12 / (8)					●	●	●	●	●	●	●
76 / (18)	5.6	60	38	3 / (2) 8 / (6) 12 / (8)						●	●	●	●	●	●
85 / (19)	5.6	66	42.5	3 / (2) 8 / (6) 12 / (8)						●	●	●	●	●	●
90 / (20)	5.6	70	45	3 / (2) 8 / (6) 12 / (8)						●	●	●	●	●	●
100 / (21)	5.6	78	50	3 / (2) 8 / (6) 12 / (8)						●	●	●	●	●	●

Material:

HSS
Hardness 62 ± 2 HRC

Execution:

Diameter d_2 and end faces ground.
Special dimensions on request.

Ordering example: with anti-rotation element

2625.10F8.1350 A3

anti-rotation element:		**Order No**
Pin Ø 6		= (3)
Angle:		**Order Code character**
0°		= (A)
Format: Square, length P		
P = 13,5 mm		= (1350)
Shape cutting length: l		**Order No**
12 mm		= (8)
Length: l_1		**Order Code character**
28 mm		= (F)
Diameter: d_2		**Order No**
32 mm		= (10)
Type: without shoulder		**Order No**
Automotive Standard		= (5)
Version:		**Order No**
Square		= (2)
Matrix		= 26

Matrix without shoulder, rectangular, Automotive Standard

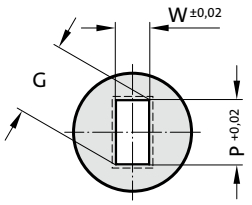

$G = \sqrt{P^2+W^2}$

2635.

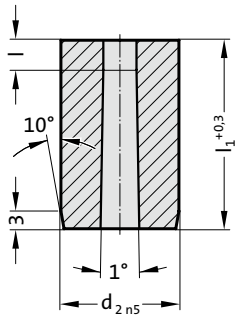

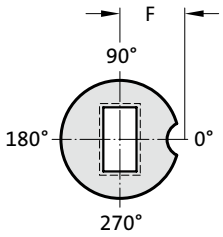



2635. Matrix without shoulder, rectangular, Automotive Standard

d_2 / (Order No)	W_{min}	G_{max}	F	l / (Order No)	l_1 / (Order Code character)	13 (A)	16 (B)	20 (C)	22 (D)	25 (E)	28 (F)	30 (G)	32 (H)	35 (J)	40 (K)
10 / (4)	1.3	6.8	7	3 / (2) 4 / (3) 5 / (4)		●	●	●	●	●	●	●	●	●	
13 / (5)	1.9	8.8	8.2	3 / (2) 5 / (4) 8 / (6)		●	●	●	●	●	●	●	●	●	
16 / (6)	1.9	10.8	9	3 / (2) 5 / (4) 8 / (6)				●	●	●	●	●	●	●	
20 / (7)	1.9	13.6	11	3 / (2) 6 / (5) 10 / (7)				●	●	●	●	●	●	●	
22 / (8)	1.9	15	12	3 / (2) 6 / (5) 10 / (7)				●	●	●	●	●	●	●	
25 / (9)	1.9	17	13.5	3 / (2) 6 / (5) 10 / (7)				●	●	●	●	●	●	●	
32 / (10)	1.9	22	16	3 / (2) 6 / (5) 12 / (8)				●	●	●	●	●	●	●	
38 / (11)	1.9	27	19	3 / (2) 8 / (6) 12 / (8)				●	●	●	●	●	●	●	●
40 / (12)	1.9	27	20	3 / (2) 8 / (6) 12 / (8)					●	●	●	●	●	●	●
45 / (13)	2.4	35	22.5	3 / (2) 8 / (6) 12 / (8)					●	●	●	●	●	●	●
50 / (14)	4	40	25	3 / (2) 8 / (6) 12 / (8)					●	●	●	●	●	●	●
56 / (15)	4	45	28	3 / (2) 8 / (6) 12 / (8)					●	●	●	●	●	●	●
63 / (16)	4	50	31.5	3 / (2) 8 / (6) 12 / (8)					●	●	●	●	●	●	●
71 / (17)	4	56	35.5	3 / (2) 8 / (6) 12 / (8)					●	●	●	●	●	●	●
76 / (18)	5.6	60	38	3 / (2) 8 / (6) 12 / (8)						●	●	●	●	●	●
85 / (19)	5.6	66	42.5	3 / (2) 8 / (6) 12 / (8)						●	●	●	●	●	●
90 / (20)	5.6	70	45	3 / (2) 8 / (6) 12 / (8)						●	●	●	●	●	●
100 / (21)	5.6	78	50	3 / (2) 8 / (6) 12 / (8)						●	●	●	●	●	●

Ordering example: with anti-rotation element

2 6 3 5 . 1 0 F 8 . 1 3 5 0 . 0 6 5 0 A 3

Anti-rotation element:	**Order No**
Pin ø6	= (3)
Angle:	**Order Code character**
0°	= (A)
Format: Rectangular, width W	
W = 6,5 mm	= (0650)
Format: Rectangular, length P	
P = 13,5 mm	= (1350)
Shape cutting length: l	**Order No**
12 mm	= (8)
Length: l_1	**Order Code character**
28 mm	= (F)
Diameter: d_2	**Order No**
32 mm	= (10)
Type: without shoulder	**Order No**
Automotive Standard	= (5)
Version:	**Order No**
Rectangular	= (3)
Matrix	= 26

Material:

HSS
Hardness 62 ± 2 HRC

Execution:

Diameter d_2 and end faces ground.
Special dimensions on request.

Matrix without shoulder, slot, Automotive Standard



2645.

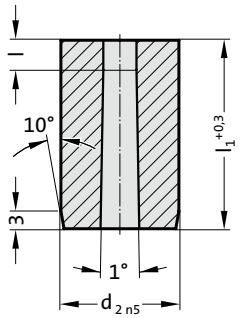

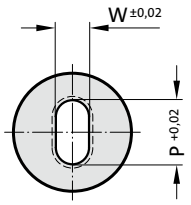

G = P

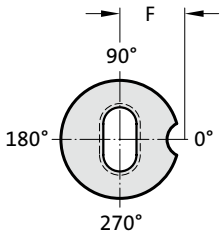

2645. Matrix without shoulder, slot, Automotive Standard

d_2 / (Order No)	W_{min}	G_{max}	F	l / (Order No)	l_1 / (Order Code character)	13 (A)	16 (B)	20 (C)	22 (D)	25 (E)	28 (F)	30 (G)	32 (H)	35 (J)	40 (K)
10 / (4)	1.3	6.8	7	3 / (2) 4 / (3) 5 / (4)		●	●	●	●	●	●	●	●	●	
13 / (5)	1.9	8.8	8.2	3 / (2) 5 / (4) 8 / (6)		●	●	●	●	●	●	●	●	●	
16 / (6)	1.9	10.8	9	3 / (2) 5 / (4) 8 / (6)				●	●	●	●	●	●	●	
20 / (7)	1.9	13.6	11	3 / (2) 6 / (5) 10 / (7)				●	●	●	●	●	●	●	
22 / (8)	1.9	15	12	3 / (2) 6 / (5) 10 / (7)				●	●	●	●	●	●	●	
25 / (9)	1.9	17	13.5	3 / (2) 6 / (5) 10 / (7)				●	●	●	●	●	●	●	
32 / (10)	1.9	22	16	3 / (2) 6 / (5) 12 / (8)				●	●	●	●	●	●	●	
38 / (11)	1.9	27	19	3 / (2) 8 / (6) 12 / (8)				●	●	●	●	●	●	●	●
40 / (12)	1.9	27	20	3 / (2) 8 / (6) 12 / (8)					●	●	●	●	●	●	●
45 / (13)	2.4	35	22.5	3 / (2) 8 / (6) 12 / (8)					●	●	●	●	●	●	●
50 / (14)	4	40	25	3 / (2) 8 / (6) 12 / (8)					●	●	●	●	●	●	●
56 / (15)	4	45	28	3 / (2) 8 / (6) 12 / (8)					●	●	●	●	●	●	●
63 / (16)	4	50	31.5	3 / (2) 8 / (6) 12 / (8)					●	●	●	●	●	●	●
71 / (17)	4	56	35.5	3 / (2) 8 / (6) 12 / (8)					●	●	●	●	●	●	●
76 / (18)	5.6	60	38	3 / (2) 8 / (6) 12 / (8)						●	●	●	●	●	●
85 / (19)	5.6	66	42.5	3 / (2) 8 / (6) 12 / (8)						●	●	●	●	●	●
90 / (20)	5.6	70	45	3 / (2) 8 / (6) 12 / (8)						●	●	●	●	●	●
100 / (21)	5.6	78	50	3 / (2) 8 / (6) 12 / (8)						●	●	●	●	●	●

Material:

HSS
Hardness 62 ± 2 HRC

Execution:

Diameter d_2 and end faces ground.
Special dimensions on request.

Ordering example: with anti-rotation element

2645.10F8.1350.0650A3

Anti-rotation element:	**Order No**
Pin ø6	= (3)
Angle:	**Order Code character**
0°	= (A)
Format: Slot, width W	
W = 6,5 mm	= (0650)
Format: Slot, length P	
P = 13,5 mm	= (1350)
Shape cutting length: l	**Order No**
12 mm	= (8)
Length: l_1	**Order Code character**
28 mm	= (F)
Diameter: d_2	**Order No**
32 mm	= (10)
Type: without shoulder	**Order No**
Automotive Standard	= (5)
Version:	**Order No**
Slot	= (4)
Matrix	= 26

Matrix without shoulder, rectangle with radiused corners, Automotive Standard

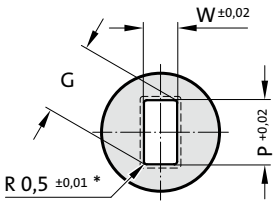

$$G = \sqrt{(P-1.0)^2+(W-1.0)^2}+1$$

2655.

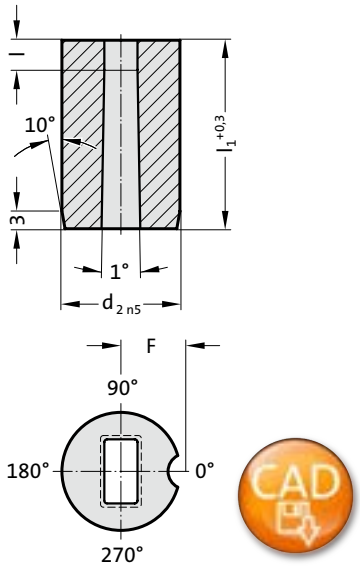



2655. Matrix without shoulder, rectangle with radiused corners, Automotive Standard

d_2 / (Order No)	W_{min}	G_{max}	F	l / (Order No)	l_1 / (Order Code character)	13 (A)	16 (B)	20 (C)	22 (D)	25 (E)	28 (F)	30 (G)	32 (H)	35 (J)	40 (K)
10 / (4)	1.3	6.8	7	3 / (2) 4 / (3) 5 / (4)		●	●	●	●	●	●	●	●	●	
13 / (5)	1.9	8.8	8.2	3 / (2) 5 / (4) 8 / (6)		●	●	●	●	●	●	●	●	●	
16 / (6)	1.9	10.8	9	3 / (2) 5 / (4) 8 / (6)				●	●	●	●	●	●	●	
20 / (7)	1.9	13.6	11	3 / (2) 6 / (5) 10 / (7)				●	●	●	●	●	●	●	
22 / (8)	1.9	15	12	3 / (2) 6 / (5) 10 / (7)				●	●	●	●	●	●	●	
25 / (9)	1.9	17	13.5	3 / (2) 6 / (5) 10 / (7)				●	●	●	●	●	●	●	
32 / (10)	1.9	22	16	3 / (2) 6 / (5) 12 / (8)				●	●	●	●	●	●	●	
38 / (11)	1.9	27	19	3 / (2) 8 / (6) 12 / (8)				●	●	●	●	●	●	●	●
40 / (12)	1.9	27	20	3 / (2) 8 / (6) 12 / (8)					●	●	●	●	●	●	●
45 / (13)	2.4	35	22.5	3 / (2) 8 / (6) 12 / (8)					●	●	●	●	●	●	●
50 / (14)	4	40	25	3 / (2) 8 / (6) 12 / (8)					●	●	●	●	●	●	●
56 / (15)	4	45	28	3 / (2) 8 / (6) 12 / (8)					●	●	●	●	●	●	●
63 / (16)	4	50	31.5	3 / (2) 8 / (6) 12 / (8)					●	●	●	●	●	●	●
71 / (17)	4	56	35.5	3 / (2) 8 / (6) 12 / (8)					●	●	●	●	●	●	●
76 / (18)	5.6	60	38	3 / (2) 8 / (6) 12 / (8)						●	●	●	●	●	●
85 / (19)	5.6	66	42.5	3 / (2) 8 / (6) 12 / (8)						●	●	●	●	●	●
90 / (20)	5.6	70	45	3 / (2) 8 / (6) 12 / (8)						●	●	●	●	●	●
100 / (21)	5.6	78	50	3 / (2) 8 / (6) 12 / (8)						●	●	●	●	●	●

Ordering example: with anti-rotation element

2655.10F8.1350.0650A3

Anti-rotation element:	**Order No**
Pin ø6	= (3)
Angle:	**Order Code character**
0°	= (A)
Format: Rectangle with radiused corners, width W	
W = 6,5 mm	= (0650)
Format: Rectangle with radiused corners, length P	
P = 13,5 mm	= (1350)
Shape cutting length: l	**Order No**
12 mm	= (8)
Length: l_1	**Order Code character**
28 mm	= (F)
Diameter: d_2	**Order No**
32 mm	= (10)
Type: without shoulder	**Order No**
Automotive Standard	= (5)
Version:	**Order No**
Rectangle with radiused corners	= (5)
Matrixes:	
26 Matrixes	

Material:

HSS
Hardness 62 ± 2 HRC

Execution:

Diameter d_2 and end faces ground.
Special dimensions on request.
* For other radius options, see standardised special shapes.

Guide bush for punch DIN 9845, Shape C



262.

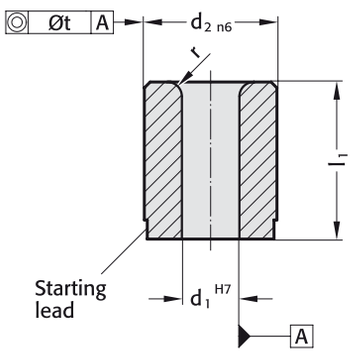

262. Guide bush for punch DIN 9845, Shape C

	Diameter steps				
d_1	d_1	d_2	t	l_1	r
0.5 - 1	0.1	5	0.01	9	1
1.1 - 2	0.1	6	0.01	12	1
2.1 - 3	0.1	7	0.01	12	1
3.1 - 4	0.1	8	0.01	12	1
4.1 - 5	0.1	10	0.01	16	1
5.1 - 6	0.1	12	0.02	16	1.5
6.1 - 8	0.1	15	0.02	20	1.5
8.1 - 10	0.1	18	0.02	20	2
10.1 - 12	0.1	22	0.02	28	2
12.1 - 15	0.1	26	0.02	28	2
15.1 - 18	0.5	30	0.02	36	2

Material:

Case hardened steel
Hardness 740 ± 40 HV 10

Execution:

Diameters d_1, d_2 and starting lead ground.

Ordering Code (example):

Guide bush for punch DIN 9845, Shape C		=	262.1.
Guide diameter d_1	5.1 mm	=	0510.
Length l_1	16 mm	=	016
Order No		=	262.1. 0510. 016

subject to alterations

Guide bush for punch ISO 8978

2621.

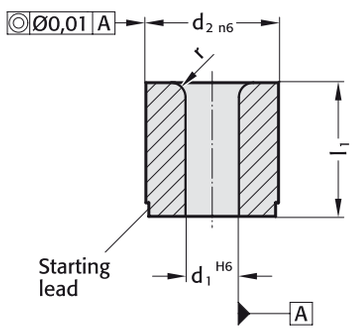



Material:

WS
Hardness 60 ± 2 HRC

Description of FIBRO materials for tool and die components see at the beginning of Chapter E.

Execution:

Diameters d_1, d_2 and starting lead ground.

2621. Guide bush for punch ISO 8978

	Diameter steps			
d_1	d_1	d_2	l_1	r
1 - 2.4	0.1	5	8	1
1.6 - 3	0.1	6	12.5	1
2 - 3.5	0.1	8	12.5	1.5
3 - 5	0.1	10	16	2
4 - 7.2	0.1	13	16	2
6 - 8.8	0.1	16	20	2
7.5 - 11.3	0.1	20	20	2.5
11 - 16.6	0.1	25	25	2.5
15 - 20	0.5	32	25	4
18 - 27	0.5	40	32	4
26 - 36	0.5	50	40	4

Ordering Code (example):

Guide bush for punch ISO 8978		=2621.1.	
Guide diameter d_1	6 mm	=	0600.
External diameter d_2	16 mm	=	1600
Order No		=2621.1.	0600.1600

Matrix without collar, DIN 9845 Shape A



260.

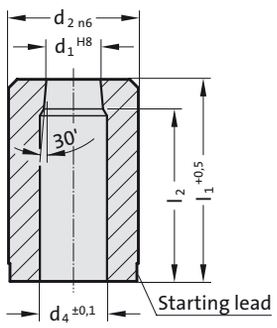

260. Matrix without collar, DIN 9845 Shape A

	Diameter steps			
d_1	d_1	d_2	l_2	l_2
			l_1=20	l_1=28
0.5 - 1	0.1	5	18	
1.1 - 2	0.1	6	17	25
2.1 - 3	0.1	7	17	25
3.1 - 4	0.1	8	17	25
4.1 - 5	0.1	10	16	24
5.1 - 6	0.1	12	16	24
6.1 - 8	0.1	15	16	24
8.1 - 10	0.1	18	16	24
10.1 - 12	0.1	22	15	23
12.1 - 15	0.1	26	15	23
15.1 - 18	0.1	30		23

Material:

HSS
Order No 260.
Hardness 62 ± 2 HRC

Description of FIBRO materials for tool and die components see at the beginning of Chapter E.

Execution:

Diameters d_1, d_2 and face surfaces ground.

d_4: For $d_1 \leq 2$ mm, $d_4 = d_1 + 0{,}3$
For d_1 = 2,1 mm to 4,0 mm, $d_4 = d_1 + 0{,}5$
For d_1 = 4,1 mm to 8,0 mm, $d_4 = d_1 + 0{,}7$
For $d_1 \geq 8{,}1$ mm, $d_4 = d_1 + 1$

Other diameters on request.

Ordering Code (example):

Matrix without collar, DIN 9845 Shape A		=	260.3.
Cutting diameter d_1	5.1 mm	=	0510.
Length l_1	20 mm	=	020
Order No		=	260.3.0510.020

subject to alterations

Matrix with collar, DIN 9845 Shape B

261.

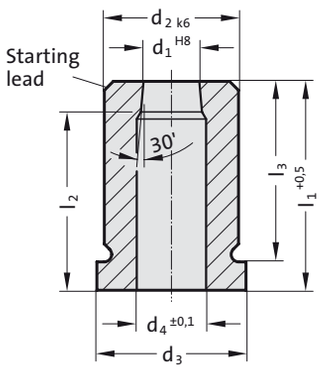



Material:

HSS
Order No 261.3.
Hardness 62 ± 2 HRC

Description of FIBRO materials for tool and die components see at the beginning of Chapter E.

Execution:

Diameters d_1, d_2 and face surfaces ground.

d_4: For $d_1 \leq 2$ mm, $d_4 = d_1 + 0{,}3$
For $d_1 = 2{,}1$ mm to 4,0 mm, $d_4 = d_1 + 0{,}5$
For $d_1 = 4{,}1$ mm to 8,0 mm, $d_4 = d_1 + 0{,}7$
For $d_1 \geq 8{,}1$ mm, $d_4 = d_1 + 1$

Other diameters on request.

261. Matrix with collar, DIN 9845 Shape B

	Diameter steps						
d_1	d_1	d_2	d_3	l_2	l_3	l_2	l_3
				l_1=20	l_1=20	l_1=28	l_1=28
0.5 - 1	0.1	5	7	18	16		
1.1 - 2	0.1	6	8	17	16	25	24
2.1 - 3	0.1	7	9	17	16	25	24
3.1 - 4	0.1	8	10	17	16	25	24
4.1 - 5	0.1	10	12	16	16	24	24
5.1 - 6	0.1	12	14	16	16	24	24
6.1 - 8	0.1	15	17	16	16	24	24
8.1 - 10	0.1	18	20	16	16	24	24
10.1 - 12	0.1	22	24	15	16	23	24
12.1 - 15	0.1	26	28	15	16	23	24
15.1 - 18	0.1	30	32			23	24

Ordering Code (example):

Matrix with collar, DIN 9845 Shape B		=261.3.	
Cutting diameter d_1	5.1 mm	=	0510.
Length l_1	20 mm	=	020
Order No		=261.3.	0510.020

FIBRO

Matrix without collar, cylindrical

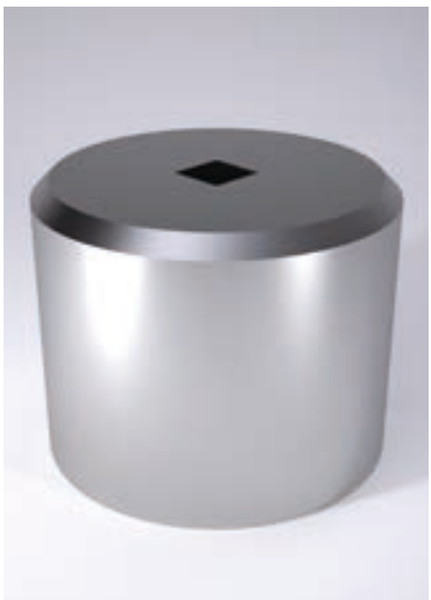

2602.

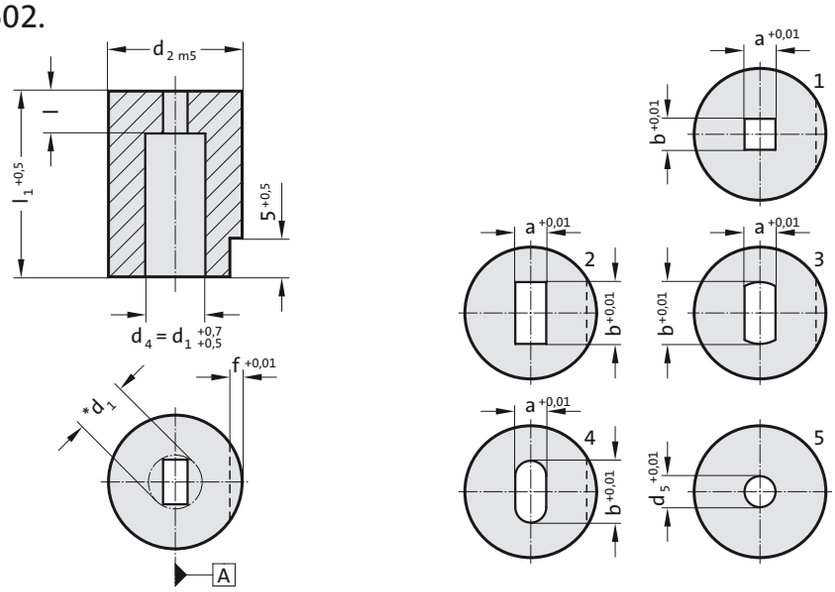

2602. Matrix without collar, cylindrical

d_1 , d_5	d_2	l	f	l_1	l_1	l_1	l_1	l_1	l_1
				16	19	22	25	28	32
1.8 - 3.2	8	3	1	●	●	●	●	●	●
2 - 5	10	3	1	●	●	●	●	●	●
3 - 7	13	3	1.5	●	●	●	●	●	●
5 - 8	16	5	1.5	●	●	●	●	●	●
7 - 11	20	5	1.5	●	●	●	●	●	●
11 - 16	25	5	2.5	●	●	●	●	●	●
16 - 19	32	7	2.5	●	●	●	●	●	●
19 - 28	40	7	2.5	●	●	●	●	●	●

Material:

HSS
Order No. 2602.3.
Hardness 64 ± 2 HRC

Execution:

Diameter d_2 and end faces ground.
Key flats parallel with reference axis “A” unless otherwise specified.
*d_1 = size over corners

With starting holes for wire-EDM as per 2601.

Ordering Code (example):

Matrix without collar, cylindrical		=2602.3.	
Locating diameter d_2	20 mm	=	020.
Length l_1	16 mm	=	016.
Die shape SHAPE	Square	=	1.
Width of die shape a	320 mm	=	0320.
Die shape length b	320 mm	=	0320
Order No		=2602.3. 020.016.1. 0320.0320	

subject to alterations

Matrix with collar, cylindrical

2612.

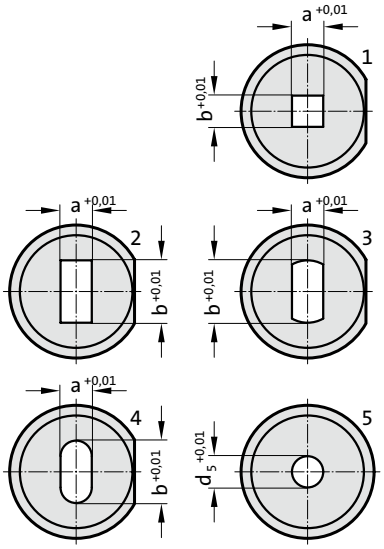

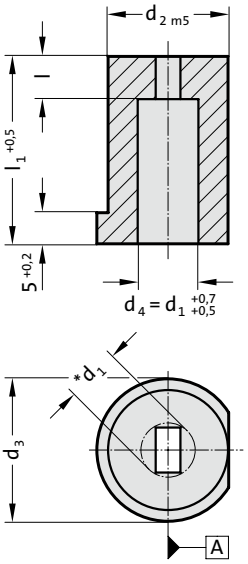



Material:

HSS
Order No. 2612.3.
Hardness 64 ± 2 HRC

Execution:

Diameter d_2 and end faces ground.
Key flats parallel with reference axis “A” unless otherwise specified.
*d_1 = size over corners

With starting holes for wire-EDM as per 2611.

2612. Matrix with collar, cylindrical

d_1 , d_5	d_2	d_3	l	F	l_1	l_1	l_1	l_1	l_1	l_1
					16	19	22	25	28	32
1.8 - 3.2	8	11	3	1	●	●	●	●	●	●
2 - 5	10	13	3	1	●	●	●	●	●	●
3 - 7	13	16	3	1.5	●	●	●	●	●	●
5 - 8	16	19	5	1.5	●	●	●	●	●	●
7 - 11	20	23	5	1.5	●	●	●	●	●	●
11 - 16	25	28	5	2.5	●	●	●	●	●	●
16 - 19	32	35	7	2.5	●	●	●	●	●	●
19 - 28	40	43	7	2.5	●	●	●	●	●	●

Matrix with collar, cylindrical		=	2612.3.
Locating diameter d_2	20 mm	=	020.
Length l_1	16 mm	=	016.
Die shape Shape	Square	=	1.
Width of die shape a	3.2 mm	=	0320.
Die shape Shape	Square	=	0320
Order No		=	2612.3.020. 016.1.0320. 0320

FIBRO

Matrix without collar, conical



2601.

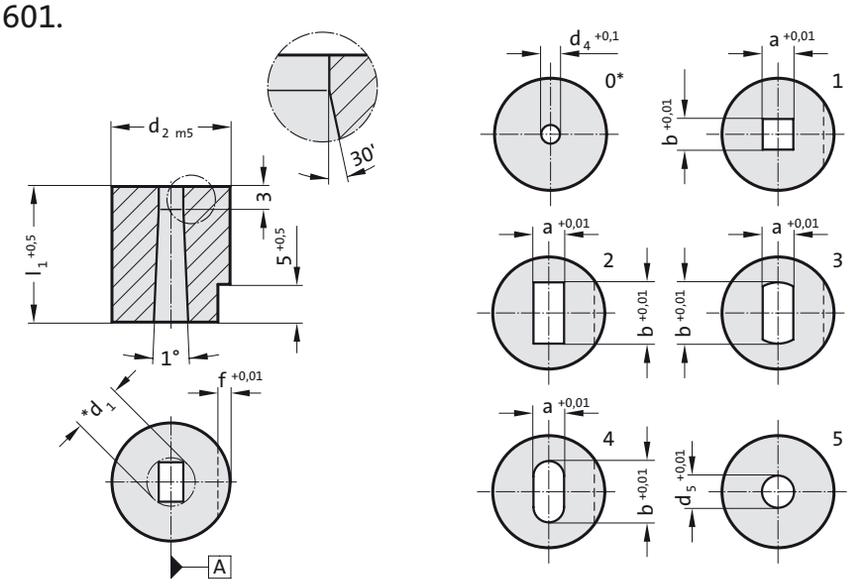

2601. Matrix without collar, conical

d_1 , d_5	d_2	d_4	f	l_1	l_1	l_1	l_1	l_1	l_1
				16	19	22	25	28	32
1.6 - 3.2	8	1	1	●	●	●	●	●	●
2 - 5	10	1	1	●	●	●	●	●	●
3 - 7	13	1.5	1.5	●	●	●	●	●	●
5 - 8	16	1.5	1.5	●	●	●	●	●	●
7 - 11	20	1.5	1.5	●	●	●	●	●	●
11 - 16	25	2.5	2.5	●	●	●	●	●	●
16 - 19	32	2.5	2.5	●	●	●	●	●	●
19 - 28	40	2.5	2.5	●	●	●	●	●	●

Material:

HSS
Order No. 2601.3.
Hardness 64 ± 2 HRC

Execution:

Diameter d_2 and end faces ground.
Key flats parallel with reference axis “A” unless otherwise specified.
*d_1 = size over corners
* 0 = Execution only with starting hole for wire cut

Ordering Code (example):

Matrix without collar, conical		=2601.3.	
Locating diameter d_2	20 mm	=	020.
Length l_1	16 mm	=	016.
Die shape SHAPE	Starting hole	=	0
Order No		=2601.3.	020.016.0

subject to alterations

Matrix with collar, conical

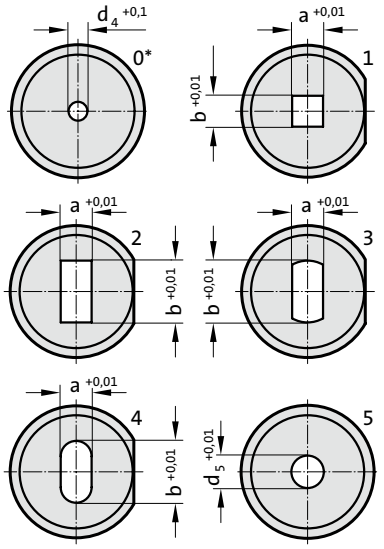

2611.

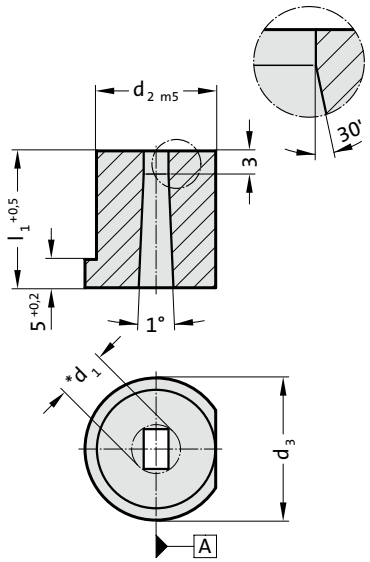

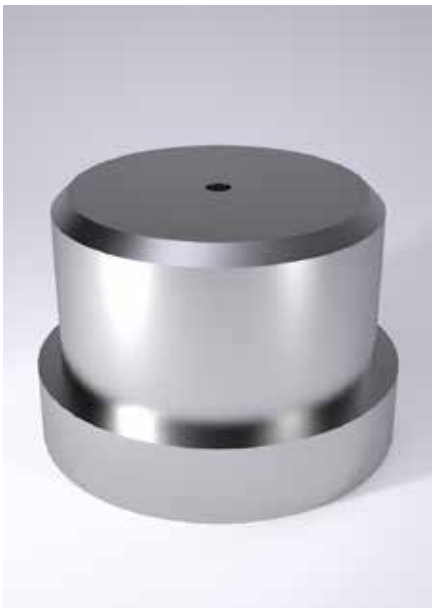

Material:

HSS
Order No. 2611.3.
Hardness 64 ± 2 HRC

Execution:

Diameter d_2 and end faces ground.
Key flats parallel with reference axis “A” unless otherwise specified.
*d_1 = size over corners
*0 = Execution only with starting hole for wire cut

2611. Matrix with collar, conical

d_1 , d_5	d_2	d_3	d_4	l_1	l_1	l_1	l_1	l_1	l_1
				16	19	22	25	28	32
1.6 - 3.2	8	11	1	●	●	●	●	●	●
2 - 5	10	13	1	●	●	●	●	●	●
3 - 7	13	16	1.5	●	●	●	●	●	●
5 - 8	16	19	1.5	●	●	●	●	●	●
7 - 11	20	23	1.5	●	●	●	●	●	●
11 - 16	25	28	2.5	●	●	●	●	●	●
16 - 19	32	35	2.5	●	●	●	●	●	●
19 - 28	40	43	2.5	●	●	●	●	●	●

Matrix with collar, conical		=	2611.3.
Locating diameter d_2	20 mm	=	020.
Length l_1	16 mm	=	016.
Die shape Shape	Square	=	1.
Width of die shape a	3.2 mm	=	0320.
Die shape Shape	Square	=	0320
Order No		=	2611.3. 020. 016. 1. 0320. 0320

Standardised Special Shapes



FIBRO

Ordering examples
Special shapes Punches/Matrixes (standardised)

2 2 9 1 . ____ . F 4 4 . . .

Punch:
22 without ejector pin

Special shape

Type:	Order No
ISO 8020	= 1
ball-lock, light duty	= 2
ball-lock, heavy duty	= 3
ball-lock, larger cutting edge, light duty	= 4
ball-lock, larger cutting edge, heavy duty	= 5

You will find diameters and lengths on the pages of punches you have selected.

NB:
All the parameters must be given for special shapes!

Special shape F 44

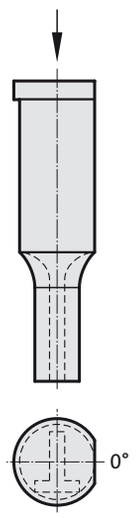

2 6 9 6 . ____ . F 4 4 . . .

Matrixes

Special shape

Type:	Order No
automotive	= 5
without shoulder ISO 8977	= 6
with shoulder ISO 8977	= 7

You will find diameters and lengths on the pages of cutting bushes you have selected.

NB:
All the parameters must be given for special shapes!

Special shape F 44

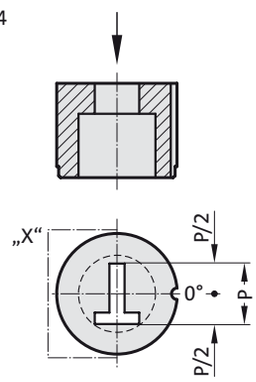

Cutting gap (a)

Roundings with the corresponding sharp corners reduce the cutting gap per side (a). If the cutting gap is 0.04 mm (a) or less, FIBRO will round the sharp edges if the cutting punch and the matrixes are ordered together. This reduces the installation time and the risk of an edge breaking during operation.

Note:

(1) and (2) - roundings and sharp edges

(1) rounding on the cutting punch of max. R0.2, corresponds to a sharp edge on the matrix

(2) rounding on the cutting matrix of max. R0.2, corresponds to a sharp edge on the punch

View „X“

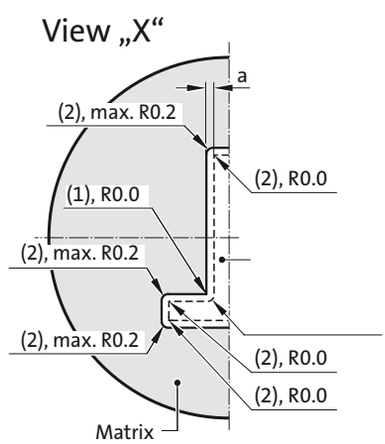

subject to alterations

Standardised special shapes

90°

Round, flattened

F10

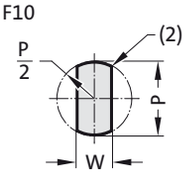

F11

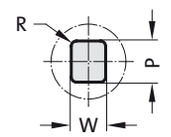

F33

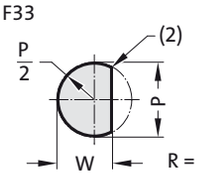

F52

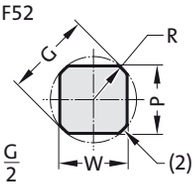

Key-hole shapes

F13

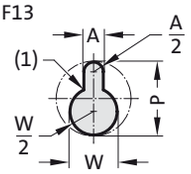

F53

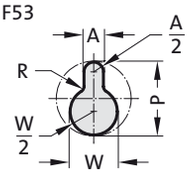

F54

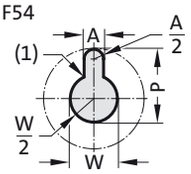

F55

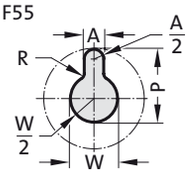

F14

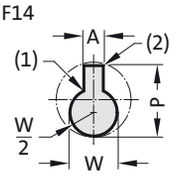

F56

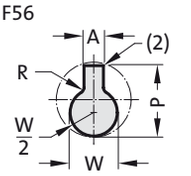

F57

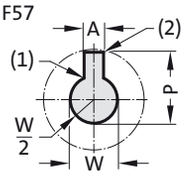

F58

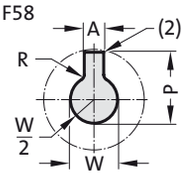

Various

F41

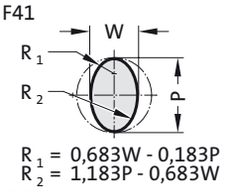

F93

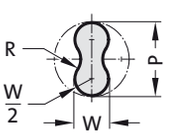

F64

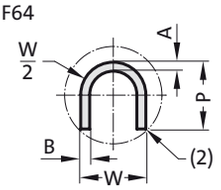

F65

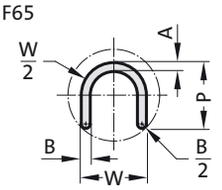

F27

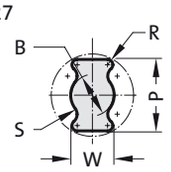

F28

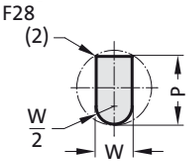

F29

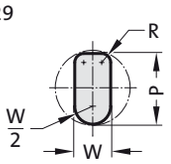

F16

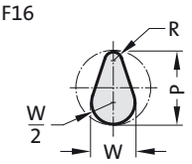

F34

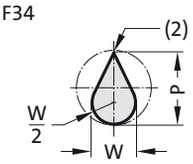

180°

Triangles, trapezes

0°

F22

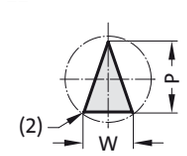

F23

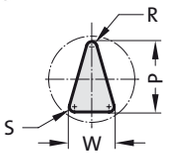

F24

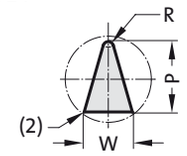

F25

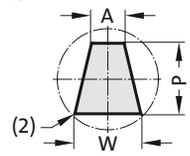

F26

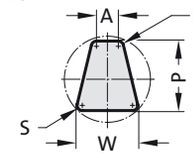

Key-hole

F30

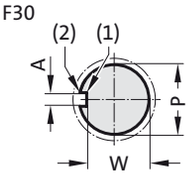

F31

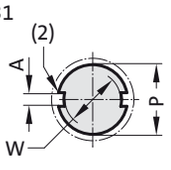

F32

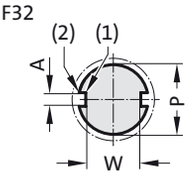

F61

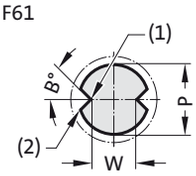

F62

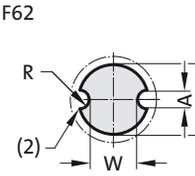

Polygons

F12

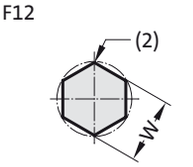

F85

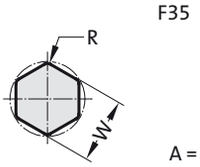

F35

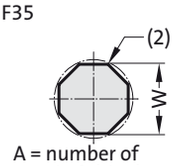

A = number of straight edges

F86

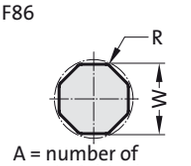

A = number of straight edges

F36

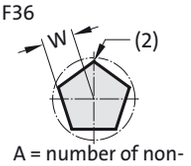

A = number of non-straight edges

F87

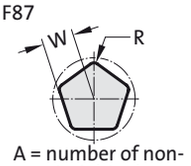

A = number of non-straight edges

F88

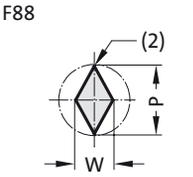

F89

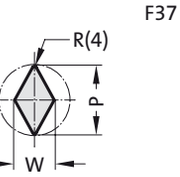

F37

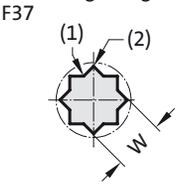

F38

F39

A = number of teeth (only 3, 4, 6 or 8)

F90

A = number of teeth (only 3, 4, 6 or 8)

270°

Ordering examples
Special shapes Punches/Matrixes (standardised)

2 2 9 1 . ____ . F 4 4 . . .

Punch:
22 without ejector pin

Special shape

Type:	Order No
ISO 8020	= 1
ball-lock, light duty	= 2
ball-lock, heavy duty	= 3
ball-lock, larger cutting edge, light duty	= 4
ball-lock, larger cutting edge, heavy duty	= 5

You will find diameters and lengths on the pages of punches you have selected.

NB:
All the parameters must be given for special shapes!

Special shape F 44

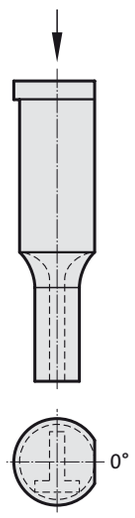

2 6 9 6 . ____ . F 4 4 . . .

Matrixes

Special shape

Type:	Order No
automotive	= 5
without shoulder ISO 8977	= 6
with shoulder ISO 8977	= 7

You will find diameters and lengths on the pages of cutting bushes you have selected.

NB:
All the parameters must be given for special shapes!

Special shape F 44

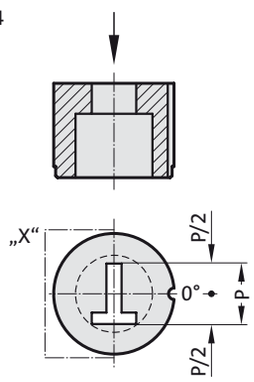

Cutting gap (a)

Roundings with the corresponding sharp corners reduce the cutting gap per side (a). If the cutting gap is 0.04 mm (a) or less, FIBRO will round the sharp edges if the cutting punch and the matrixes are ordered together. This reduces the installation time and the risk of an edge breaking during operation.

Note:

(1) and (2) - roundings and sharp edges

(1) rounding on the cutting punch of max. R0.2, corresponds to a sharp edge on the matrix

(2) rounding on the cutting matrix of max. R0.2, corresponds to a sharp edge on the punch

View „X“

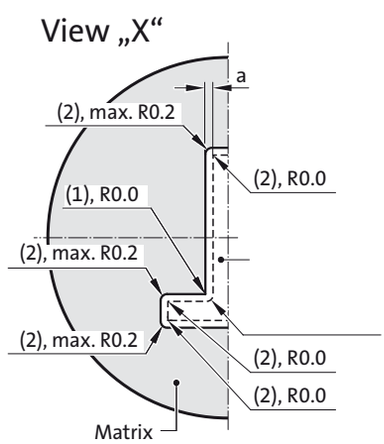

subject to alterations

Standardised special shapes

90°

Multi key-hole shapes

F19

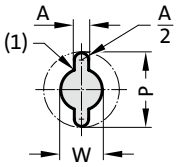

F59

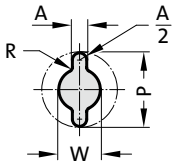

F20

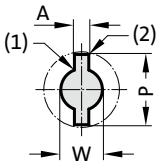

F60

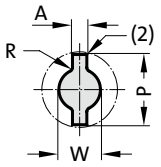

F17

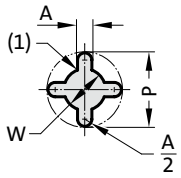

F18

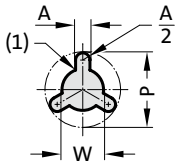

Double T-shapes

F21

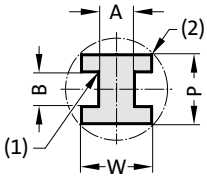

F91

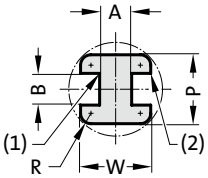

F92

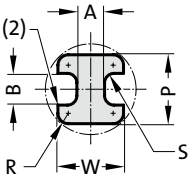

F15

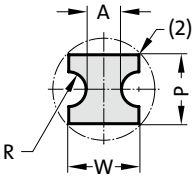

Simple T-shapes

F44

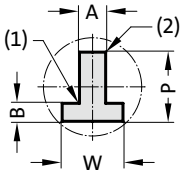

F66

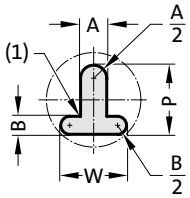

F45

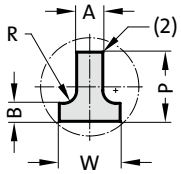

F67

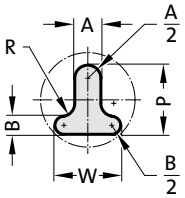

L-shapes

180°

F46

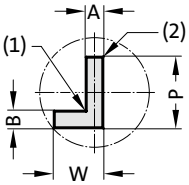

F77

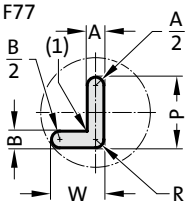

F78

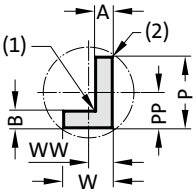

F79

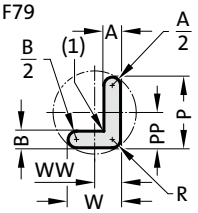

F48

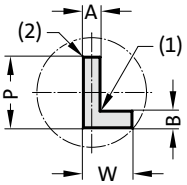

F80

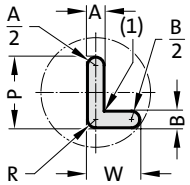

0°

F81

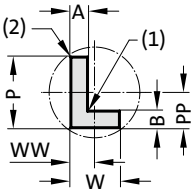

F82

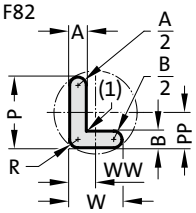

F47

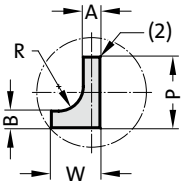

F83

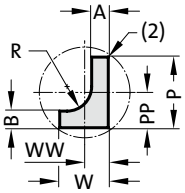

F49

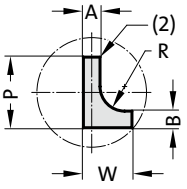

F84

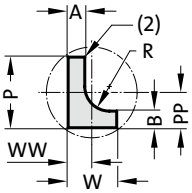

U-shapes

F50

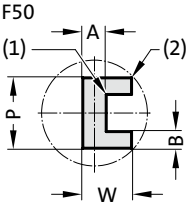

F68

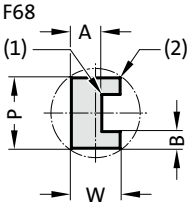

F69

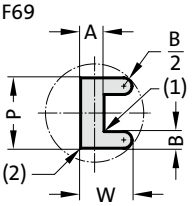

F70

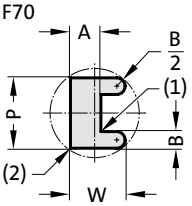

F71

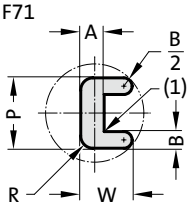

F72

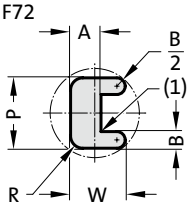

F51

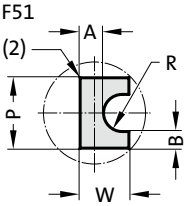

F73

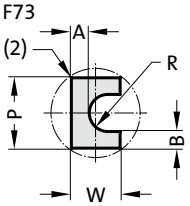

F74

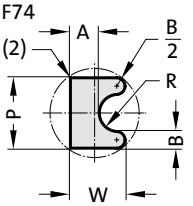

F75

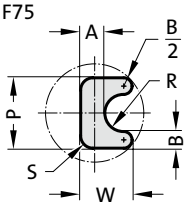

F76

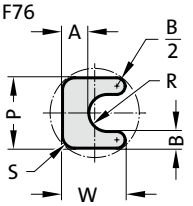

270°

Dynamic stripping element (DAE)



2618.

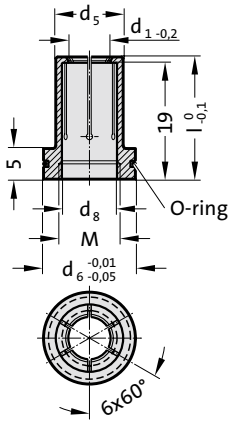

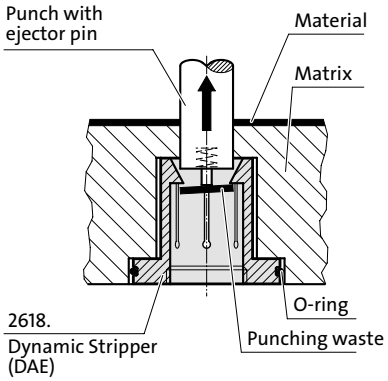

Description:

The dynamic stripper is used in blanking tools for punching operations using material up to 2 mm thick. The stripper is below the die. It is similar in shape to a segmented chuck. After the punching operation the punch enters the stripper with the punch waste still attached. The dynamic stripper opens up to receive the punch. On the return stroke the dynamic stripper strips the punch waste from the punch. The stripping element diameter d_1 is manufactured 0.2 mm smaller than the diameter p of the punch. To ensure reliable stripping the minimum entry depth into the dynamic stripper must be no less than 1 mm. The dynamic stripper can help to protect both the tool and the product from damage and also accelerate the production rate.

Material:

Steel, hardened

Mounting example

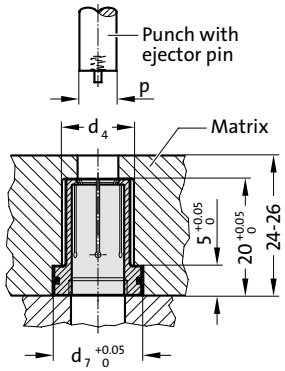

Mounting example

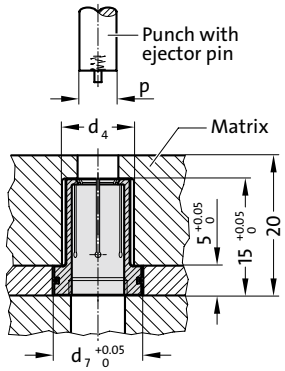

subject to alterations

2618. Dynamic stripping element (DAE)

Cutting punch p Diameter steps 0.01	DAE d_1 Order-Ø	d_5	d_6	l	M	Matrix d_4	d_7
3-3.09	3	7	11	19.95	M6	8	11
3.1-3.19	3.1	7	11	19.95	M6	8	11
3.2-3.29	3.2	7	11	19.95	M6	8	11
3.3-3.39	3.3	7	11	19.95	M6	8	11
3.4-3.49	3.4	7	11	19.95	M6	8	11
3.5-3.59	3.5	7	11	19.95	M6	8	11
3.6-3.69	3.6	7	11	19.95	M6	8	11
3.7-3.79	3.7	7	11	19.95	M6	8	11
3.8-3.89	3.8	7	11	19.95	M6	8	11
3.9-3.99	3.9	7	11	19.95	M6	8	11
4-4.09	4	7	11	19.95	M6	8	11
4.1-4.19	4.1	8	12	19.95	M8	9	12
4.2-4.29	4.2	8	12	19.95	M8	9	12
4.3-4.39	4.3	8	12	19.95	M8	9	12
4.4-4.49	4.4	8	12	19.95	M8	9	12
4.5-4.59	4.5	8	12	19.95	M8	9	12
4.6-4.69	4.6	8	12	19.95	M8	9	12
4.7-4.79	4.7	8	12	19.95	M8	9	12
4.8-4.89	4.8	8	12	19.95	M8	9	12
4.9-4.99	4.9	8	12	19.95	M8	9	12
5-5.09	5	8	12	19.95	M8	9	12
5.1-5.19	5.1	9	13	19.95	M8	10	13
5.2-5.29	5.2	9	13	19.95	M8	10	13
5.3-5.39	5.3	9	13	19.95	M8	10	13
5.4-5.49	5.4	9	13	19.95	M8	10	13
5.5-5.59	5.5	9	13	19.95	M8	10	13
5.6-5.69	5.6	9	13	19.95	M8	10	13
5.7-5.79	5.7	9	13	19.95	M8	10	13
5.8-5.89	5.8	9	13	19.95	M8	10	13
5.9-5.99	5.9	9	13	19.95	M8	10	13
6-6.09	6	9	13	19.95	M8	10	13
6.1-6.19	6.1	10	14	19.95	M10	11	14
6.2-6.29	6.2	10	14	19.95	M10	11	14
6.3-6.39	6.3	10	14	19.95	M10	11	14
6.4-6.49	6.4	10	14	19.95	M10	11	14
6.5-6.59	6.5	10	14	19.95	M10	11	14
6.6-6.69	6.6	10	14	19.95	M10	11	14
6.7-6.79	6.7	10	14	19.95	M10	11	14
6.8-6.89	6.8	10	14	19.95	M10	11	14
6.9-6.99	6.9	10	14	19.95	M10	11	14
7-7.09	7	10	14	19.95	M10	11	14
7.1-7.19	7.1	11	15	19.95	M10	12	15
7.2-7.29	7.2	11	15	19.95	M10	12	15
7.3-7.39	7.3	11	15	19.95	M10	12	15
7.4-7.49	7.4	11	15	19.95	M10	12	15
7.5-7.59	7.5	11	15	19.95	M10	12	15
7.6-7.69	7.6	11	15	19.95	M10	12	15
7.7-7.79	7.7	11	15	19.95	M10	12	15
7.8-7.89	7.8	11	15	19.95	M10	12	15
7.9-7.99	7.9	11	15	19.95	M10	12	15
8-8.09	8	11	15	19.95	M10	12	15

Ordering Code (example):

Dynamic stripping element (DAE)		=	2618.
External diameter d_5	9 mm	=	09.
Order length BL	20 mm	=	020.
Order diameter d_1	5.5 mm	=	0550
Order No		=	2618.09.020.0550

Ordering Code (example)
Matrixes for Dynamic Stripper (DAE)

Note:

See table
for standard dimensions

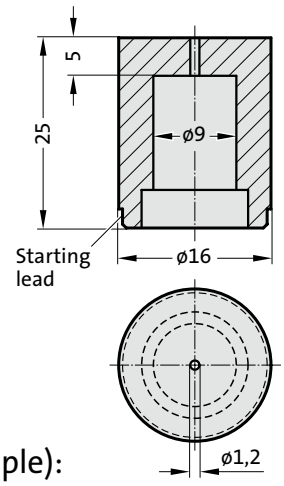

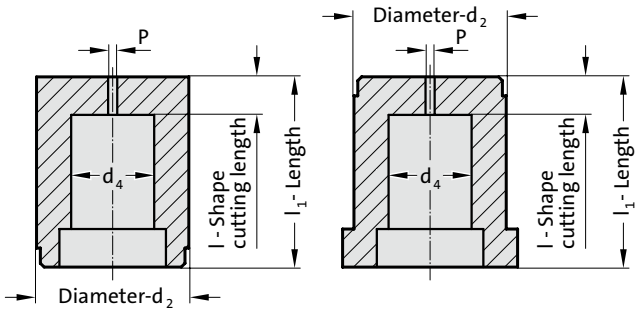

Ordering Code (example):

2618.06.6E4.09

- d4 = 9 mm (09)
- Shape cutting length: l = 5 mm (4)
- Length: l1 = 25 mm (E)
- Diameter: d2 = 16 mm (6)
- Type: without collar for Dynamic Stripper DAE (6)
- Version: Blank (pilot hole bore) (0)
- Matrix for Dynamic Stripper (DAE) (2618)

d4= 9 mm

Shape cutting length l	Order No
5	= 4

Length l1	Order Code character
25	= E

Diameter d2	Order No
13	= 5
16	= 6
20	= 7

Type	Order No
without collar for DAE	= 6
with collar for DAE	= 7

Version	Order No
blank (pilot hole bore)	= 0

Matrixes for Dynamic Stripper (DAE)

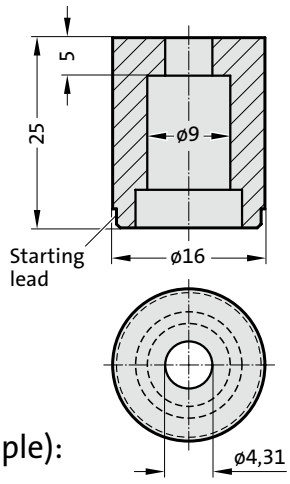

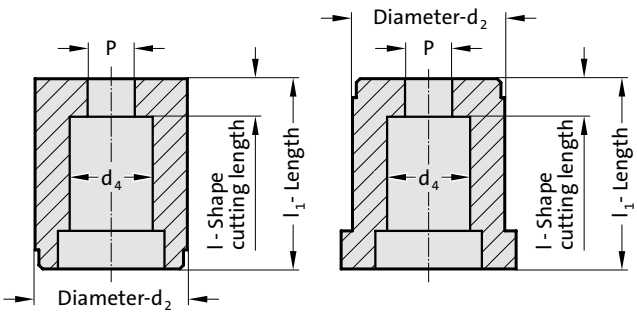

Ordering Code (example):

2618.16.6E4.0431

- Shape: Round, P = 4,31 mm (0431)
- Shape cutting length: l = 5 mm (4)
- Shape cutting length: l1 = 25 mm (E)
- Diameter: d2 = 16 mm (6)
- Type: without collar for Dynamic Stripper DAE (6)
- Version: Round (1)
- Matrix for Dynamic Stripper (DAE) (2618)

Shape: Round, P = 4,31 mm

Shape cutting length l	Order No
5	= 4

Length l1	Order Code character
25	= E

Diameter d2	Order No
13	= 5
16	= 6
20	= 7

Type	Order No
without collar for DAE	= 6
with collar for DAE	= 7

Version	Order No
Round	= 1

Matrixes for Dynamic Stripper (DAE)

subject to alterations

Matrix without collar for dynamic stripper (DAE), blank

2618.06.

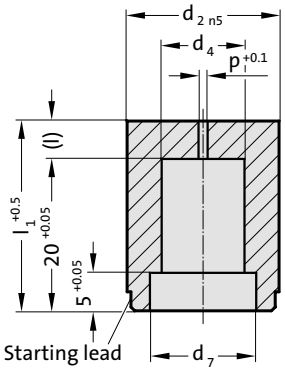



2618.06. Matrix without collar for dynamic stripper (DAE), blank

d_2	d_4	d_7	p	l	l_1
13	8	11	1.2	5	25
16	9	12	1.2	5	25
16	10	13	1.5	5	25
20	11	14	1.5	5	25
20	12	15	1.5	5	25

Ordering-code (example):

2 6 1 8 . 0 6 . 6 E 4 . 0 9

Diameter d_4	9 mm	= 09
Shape cutting length: l	5 mm	**Order number** = (4)
Length: l_1	25 mm	**Order code character** = (E)
Diameter d_2	16 mm	**Order number** = (6)
Type:	without sholder for DAE	**Order number** = (6)
Version:	Blank (pilot hole bore)	**Order number** = (0)
for Dynamic Stripper (DAE)		= 18
Matrix		= 26

Material:

HSS
Hardness 62 ± 2 HRC

Execution:

Diameter d_2, starting lead and face surfaces ground.
Diameter P is a bored pilot hole for wire EDM.

Note:

Order dynamic stripper (DAE) separately.

Matrix with collar for dynamic stripper (DAE), blank



2618.07.

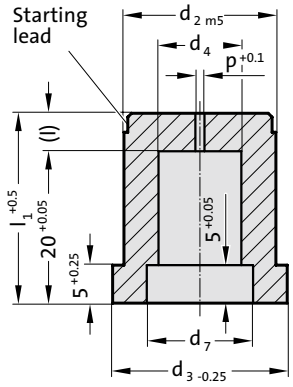

2618.07. Matrix with collar for dynamic stripper (DAE), blank

d_2	d_3	d_4	d_7	p	l	l_1
13	16	8	11	1.2	5	25
16	19	9	12	1.2	5	25
16	19	10	13	1.5	5	25
20	23	11	14	1.5	5	25
20	23	12	15	1.5	5	25

Material:

HSS
Hardness 62 ± 2 HRC

Execution:

Diameter d_2, starting lead and face surfaces ground.
Diameter P is a bored pilot hole for wire EDM.

Note:

Order dynamic stripper (DAE) separately.

Ordering-code (example):

2 6 1 8 . 0 7 . 6 E 4 . 0 9

Diameter d_4	9 mm	= 09
Shape cutting length: l	5 mm	**Order number** = (4)
Length: l_1	25 mm	**Order code character** = (E)
Diameter d_2	16 mm	**Order number** = (6)
Type:	with sholder for DAE	**Order number** = (7)
Version:	Blank (pilot hole bore)	**Order number** = (0)
	for Dynamic Stripper (DAE)	= 18
	Matrix	= 26

subject to alterations

Matrix without collar for dynamic stripper (DAE), round

Mounting example

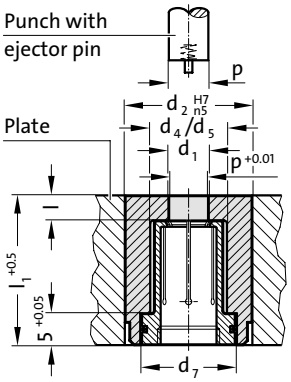

2618.16.

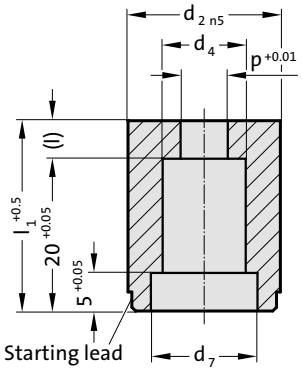



2618.16. Matrix without collar for dynamic stripper (DAE), round

d_2	d_4	d_7	l	l_1	Matrix Diameter steps 0.01 P	DAE d_5	d_1 Diameter steps 0.1
13	8	11	5	25	3 - 4.29	7	3 - 4
16	9	12	5	25	4.3 - 5.29	8	4.1 - 5
16	10	13	5	25	5.3 - 6.29	9	5.1 - 6
20	11	14	5	25	6.3 - 7.29	10	6.1 - 7
20	12	15	5	25	7.3 - 8.29	11	7.1 - 8

Ordering-code (example):

2 6 1 8 . 1 6 . 6 E 4 . 0 9

Diameter d_4 9 mm		= 09
Shape cutting length: l 5 mm	**Order number**	= (4)
Length: l_1 25 mm	**Order code character**	= (E)
Diameter d_2 16 mm	**Order number**	= (6)
Type: without sholder for DAE	**Order number**	= (6)
Version: Round	**Order number**	= (1)
for Dynamic Stripper (DAE)		= 18
Matrix		= 26

Material:

HSS
Hardness 62 ± 2 HRC

Execution:

Diameter d_2, starting lead and end faces ground.

Note:

Order dynamic stripper (DAE) separately.

Matrix with collar for dynamic stripper (DAE), round



2618.17.

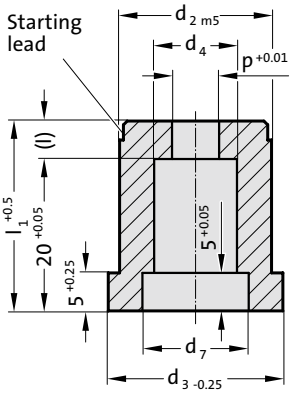

Mounting example

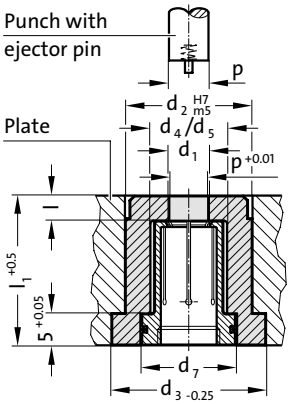

2618.17. Matrix with collar for dynamic stripper (DAE), round

d_2	d_3	d_4	d_7	l	l_1	Matrix Diameter steps 0.01 P	DAE d_5	d_1 Diameter steps 0.1
13	16	8	11	5	25	3 - 4.29	7	3 - 4
16	19	9	12	5	25	4.3 - 5.29	8	4.1 - 5
16	19	10	13	5	25	5.3 - 6.29	9	5.1 - 6
20	23	11	14	5	25	6.3 - 7.29	10	6.1 - 7
20	23	12	15	5	25	7.3 - 8.29	11	7.1 - 8

Material:

HSS
Hardness 62 ± 2 HRC

Execution:

Diameter d_2, starting lead and end faces ground.

Note:

Order dynamic stripper (DAE) separately

Ordering-code (example):

2618.17.6E4.09

Diameter d_4	9 mm	= 09
Shape cutting length: l	5 mm	**Order number** = (4)
Length: l_1	25 mm	**Order code character** = (E)
Diameter d_2	16 mm	**Order number** = (6)
Type:	with sholder for DAE	**Order number** = (7)
Version:	Round	**Order number** = (1)
	for Dynamic Stripper (DAE)	= 18
	Matrix	= 26

subject to alterations



Retainers for ball-lock punches

Triangle retainer for ball-lock punches, light duty



2664.05.

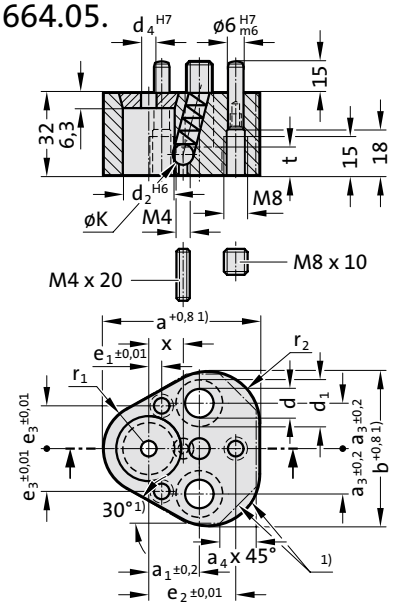

Execution:

Version for metal thicknesses up to 3 mm. The punch locating hole d_2 is manufactured to a tolerance of ± 0.01 mm relative to the 6 stud holes H7. This ensures the interchangeability of the locating plate with other polygon versions.

Note:

Special punch retainers available to order.

1) Contours may vary. Maximum dimensions are specified in the table.

2664.05. Triangle retainer for ball-lock punches, light duty

Order No	d	d_1	d_2	d_4	a	a_1	a_3	a_4	b	e_1	e_2	e_3	ØK	t	r_1	r_2	x
2664.05.10	9	15	10	6	44.5	19	11.1	10	43.7	7.5	26.925	9	8	9	9.5	12	8.2
2664.05.13	9	15	13	6	50.8	19	14.3	12	50	6.5	29.97	12	8	9	12.7	15.2	9.5
2664.05.16	9	15	16	6	54	19	15.9	13	53.2	6	31.75	13.5	8	9	14.3	16.8	11.2
2664.05.20	11	18	20	6	60.3	19	17.5	14	59.5	5	33.53	16.5	8	11	17.5	20	13.2
2664.05.25	13.5	20	25	6	69.9	23.8	19.8	16	69.1	7	40.64	22	8	13.5	22.2	24.7	15.7
2664.05.32	13.5	20	32	6	69.9	23.8	19.8	16	69.1	7	40.64	22	8	13.5	22.2	24.7	19.25
2664.05.38	13.5	20	38	6	77.4	27	24	18	76.6	10	43.993	26	8	13.5	26	28.5	22.25

subject to alterations

Triangle retainer for ball-lock punches, heavy duty

2664.06.

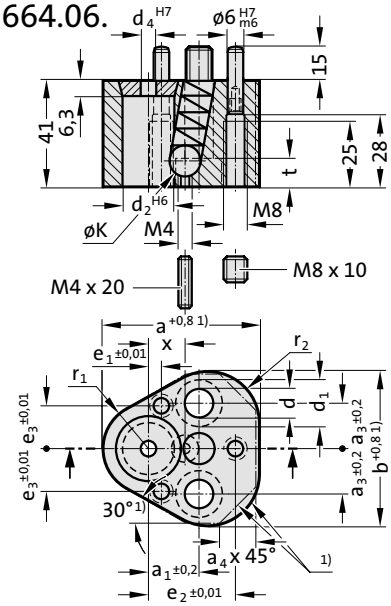



Execution:

Version for metal thicknesses > 3 mm/max. 6 mm. The punch locating hole d_2 is manufactured to a tolerance of ± 0.01 mm relative to the 6 stud holes H7. This ensures the interchangeability of the locating plate with other polygon versions.

Note:

Special punch retainers available to order.

1) Contours may vary. Maximum dimensions are specified in the table.

2664.06. Triangle retainer for ball-lock punches, heavy duty

Order No	d	d_1	d_2	d_4	a	a_1	a_3	a_4	b	e_1	e_2	e_3	ØK	t	r_1	r_2	x
2664.06.10	9	15	10	6	44.5	19	11.1	10	43.7	7.5	26.925	9	10	9	9.5	12	9.8
2664.06.13	9	15	13	6	50.8	19	14.3	12	50	6.5	29.97	12	12	9	12.7	15.2	11.3
2664.06.16	9	15	16	6	54	19	15.9	13	53.2	6	31.75	13.5	12	9	14.3	16.8	12.8
2664.06.20	11	18	20	6	60.3	19	17.5	14	59.5	5	33.53	16.5	12	11	17.5	20	14.8
2664.06.25	13.5	20	25	6	69.9	23.8	19.8	16	69.1	7	40.64	22	12	13.5	22.2	24.7	17.3
2664.06.32	13.5	20	32	6	69.9	23.8	19.8	16	69.1	7	40.64	22	12	13.5	22.2	24.7	20.8
2664.06.40	13.5	20	40	6	77.4	27	24	18	76.6	10	43.993	26	12	13.5	26	28.5	24.8

Triangle retainer for ball-lock punches, light duty



2664.07.

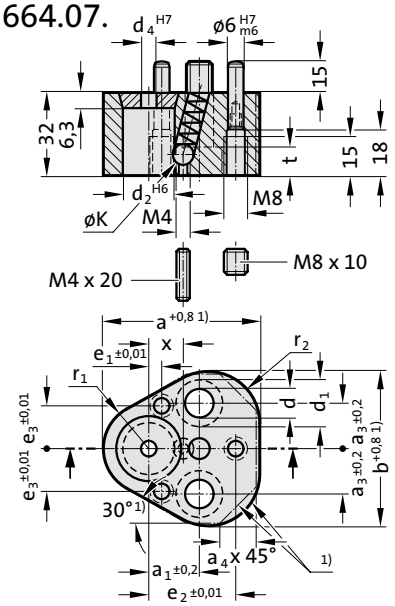

Execution:

Version for metal thicknesses up to 3 mm. The punch locating hole d_2 is manufactured to a tolerance of ± 0.01 mm relative to the 6 stud holes H7. This ensures the interchangeability of the locating plate with other polygon versions.

Note:

Special punch retainers available to order.

1) Contours may vary. Maximum dimensions are specified in the table.

2664.07. Triangle retainer for ball-lock punches, light duty

Order No	d	d_1	d_2	d_4	a	a_1	a_3	a_4	b	e_1	e_2	e_3	ØK	t	r_1	r_2	x
2664.07.06	6.6	11	6	3	35	19	11.1	6	37.5	9	23	8	6	7	8	8	5.7

subject to alterations

Triangle retainer for ball-lock punches, heavy duty

2664.10.

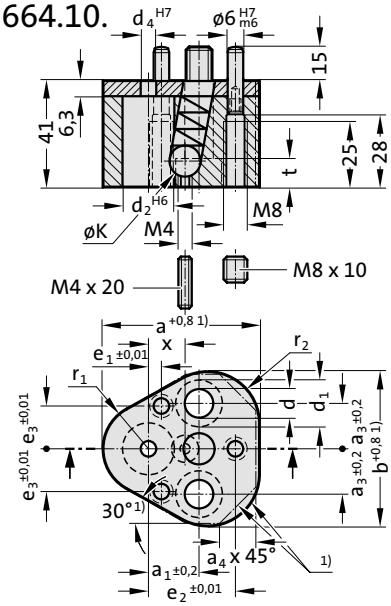



Execution:

Version for metal thicknesses >3 mm/max. 6 mm. The punch locating hole d_2 is manufactured to a tolerance of ± 0.01 mm relative to the 6 stud holes H7. This ensures the interchangeability of the locating plate with other polygon versions.

Note:

Special punch retainers available to order.
Pressure plate welded.

1) Contours may vary. Maximum dimensions are specified in the table.

2664.10. Triangle retainer for ball-lock punches, heavy duty

Order No	d	d_1	d_2	d_4	a	a_1	a_3	a_4	b	e_1	e_2	e_3	ØK	t	r_1	r_2	x
2664.10.10	9	15	10	6	44.5	19	11.1	10	43.7	7.5	26.925	9	10	9	9.5	12	9.8
2664.10.13	9	15	13	6	50.8	19	14.3	12	50	6.5	29.97	12	12	9	12.7	15.2	11.3
2664.10.16	9	15	16	6	54	19	15.9	13	53.2	6	31.75	13.5	12	9	14.3	16.8	12.8
2664.10.20	11	18	20	6	60.3	19	17.5	14	59.5	5	33.53	16.5	12	11	17.5	20	14.8
2664.10.25	13.5	20	25	6	69.9	23.8	19.8	16	69.1	7	40.64	22	12	13.5	22.2	24.7	17.3
2664.10.32	13.5	20	32	6	69.9	23.8	19.8	16	69.1	7	40.64	22	12	13.5	22.2	24.7	20.8
2664.10.40	13.5	20	40	6	77.4	27	24	18	76.6	10	43.993	26	12	13.5	26	28.5	24.8

Accessories for Retainers, triangular, for Ball-Lock Punches

		2192.10.	236.1.	2666.04.	2192.72.	2666.06.	2666.01. .1	2192.72.
		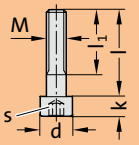	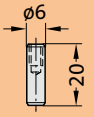		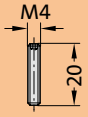		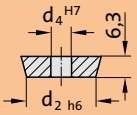	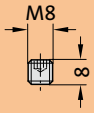
Retainer	∅ d_2	Socket head cap screw	Dowel pin	Ball	Ball release pin	Spring	Pressure disk for centring pin	Pin screw
2664.05.	10	2192.10.08.035	236.1.0600.020	2666.04.008	2192.72.04.020	2666.06.008	2666.01.10.1	2192.72.08.008
	13	2192.10.08.035	236.1.0600.020	2666.04.008	2192.72.04.020	2666.06.008	2666.01.13.1	2192.72.08.008
	16	2192.10.08.035	236.1.0600.020	2666.04.008	2192.72.04.020	2666.06.008	2666.01.16.1	2192.72.08.008
	20	2192.10.10.035	236.1.0600.020	2666.04.008	2192.72.04.020	2666.06.008	2666.01.20.1	2192.72.08.008
	25	2192.10.12.035	236.1.0600.020	2666.04.008	2192.72.04.020	2666.06.008	2666.01.25.1	2192.72.08.008
	32	2192.10.12.035	236.1.0600.020	2666.04.008	2192.72.04.020	2666.06.008	2666.01.32.1	2192.72.08.008
	38	2192.10.12.035	236.1.0600.020	2666.04.008	2192.72.04.020	2666.06.008	2666.01.38.1	2192.72.08.008
2664.06./10.	10	2192.10.08.040	236.1.0600.020	2666.04.010	2192.72.04.020	2666.06.010	2666.01.10.1	2192.72.08.008
	13	2192.10.08.040	236.1.0600.020	2666.04.012	2192.72.04.020	2666.06.012	2666.01.13.1	2192.72.08.008
	16	2192.10.08.040	236.1.0600.020	2666.04.012	2192.72.04.020	2666.06.012	2666.01.16.1	2192.72.08.008
	20	2192.10.10.050	236.1.0600.020	2666.04.012	2192.72.04.020	2666.06.012	2666.01.20.1	2192.72.08.008
	25	2192.10.12.050	236.1.0600.020	2666.04.012	2192.72.04.020	2666.06.012	2666.01.25.1	2192.72.08.008
	32	2192.10.12.050	236.1.0600.020	2666.04.012	2192.72.04.020	2666.06.012	2666.01.32.1	2192.72.08.008
	40	2192.10.12.050	236.1.0600.020	2666.04.012	2192.72.04.020	2666.06.012	2666.01.40.1	2192.72.08.008
2664.07.	6	2192.10.06.035	236.1.0600.020	2666.04.006	2192.72.04.020	2666.06.006	2666.01.06.1	2192.72.08.008

Ball release tool

Hook shape	straight	straight with threaded tip
2666.05.01	2666.05.02	2666.05.03
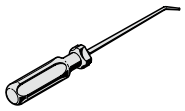	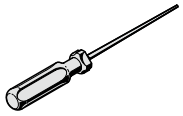	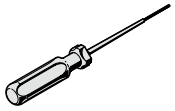

subject to alterations

ACCU-LOCK Fixture device for ball-lock punches, light duty

2668.2.

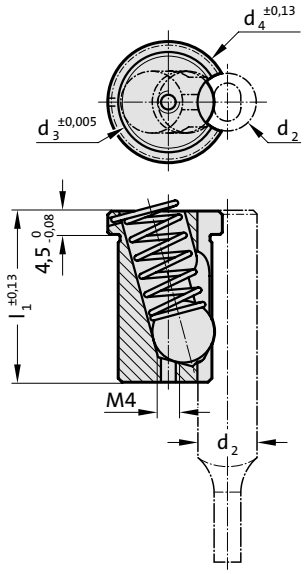

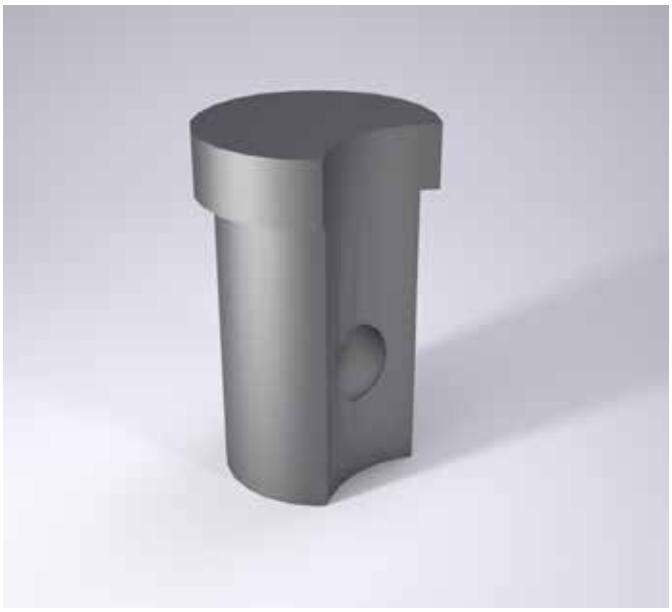

Note:

Use ball release tool 2666.05.02, straight.

Mounting example

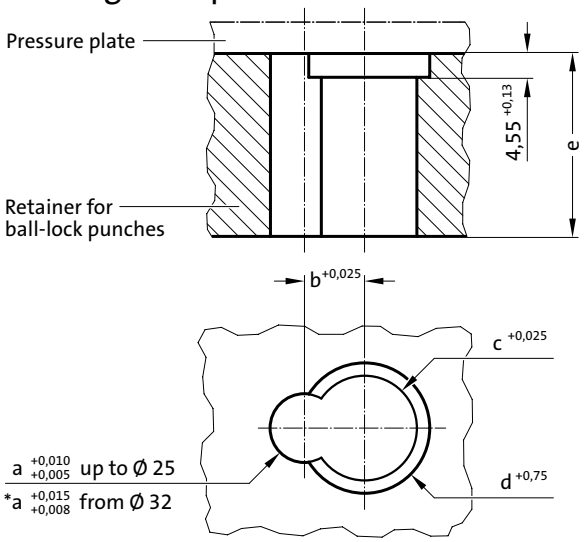

2668.2. ACCU-LOCK Fixture device for ball-lock punches, light duty

Order No	d_2	d_3	d_4	l_1	a	b	c	d	e
2668.2.06	6	12	14.6	25.7	6	6.5	12.013	15	25.7
2668.2.10	10	14	16.6	25.7	10	9	14.013	17	25.7
2668.2.13	13	14	16.6	25.7	13	10.5	14.013	17	25.7
2668.2.16	16	14	16.6	25.7	16	12	14.013	17	25.7
2668.2.20	20	16	18.6	25.7	20	14	16.013	19	25.7
2668.2.25	25	16	18.6	25.7	25	16.5	16.013	19	25.7
2668.2.32	32	16	18.6	25.7	32	20	16.013	19	25.7
2668.2.38	38	16	18.6	25.7	38	23	16.013	19	25.7

ACCU-LOCK Fixture device for ball-lock punches, heavy duty



2668.3.

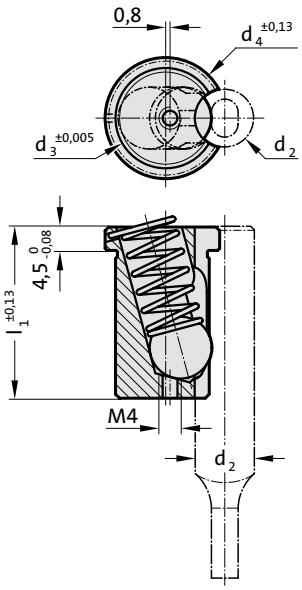

Mounting example

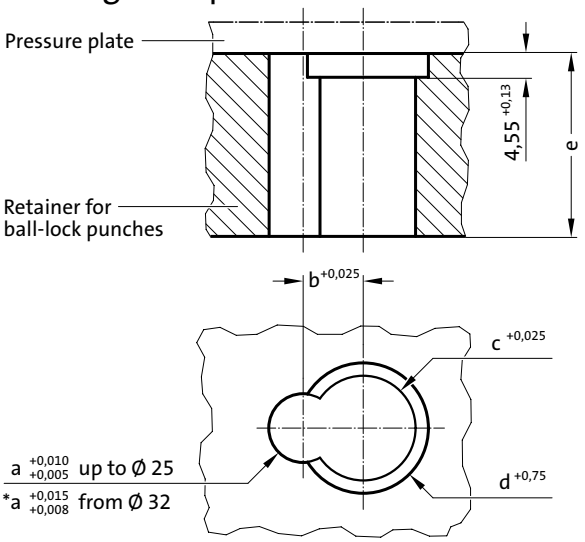

Note:

Use ball release tool 2666.05.02, straight.

2668.3. ACCU-LOCK Fixture device for ball-lock punches, heavy duty

Order No	d_2	d_3	d_4	l_1	a	b	c	d	e
2668.3.10	10	16	19.6	34.7	10	10	16.013	20	34.7
2668.3.13	13	20	24.6	34.7	13	11.5	20.013	25	34.7
2668.3.16	16	20	24.6	34.7	16	13	20.013	25	34.7
2668.3.20	20	20	24.6	34.7	20	15	20.013	25	34.7
2668.3.25	25	20	24.6	34.7	25	17.5	20.013	25	34.7
2668.3.32	32	20	24.6	34.7	32	21	20.013	25	34.7
2668.3.40	40	20	24.6	34.7	40	25	20.013	25	34.7

subject to alterations



Retainers for punches ISO 8020

Triangle retainer, for punches ISO 8020 without anti-rotation element



2664.02.

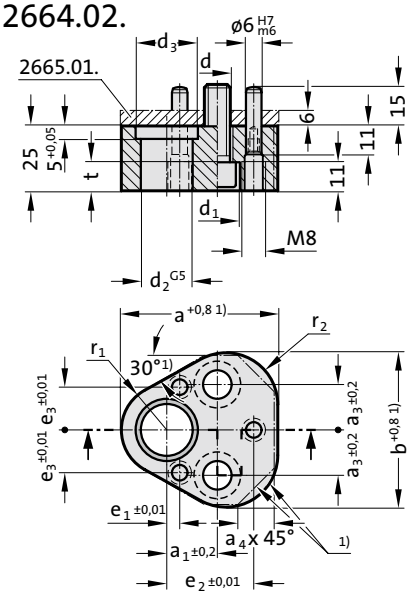

Execution:

The centres of the pinholes are the reference points for the position of the punch bore.
The dimensions e_1, e_2 and e_3 have a tolerance of ± 0.01 mm.
The triangle ball-lock retainers are interchangeable.

Note:

Pressure plate 2665.01. to be ordered separately for the receiving punch plate.

1) Contours may vary. Maximum dimensions are specified in the table.

2664.02. Triangle retainer, for punches ISO 8020 without anti-rotation element

Order No	d	d_1	d_2	d_3	a	a_1	a_3	a_4	b	e_1	e_2	e_3	t	r_1	r_2
2664.02.10	9	15	10	14	44.5	19	11.1	10	43.7	7.5	26.925	9	9	9.5	12
2664.02.13	9	15	13	17	50.8	19	14.3	12	50	6.5	29.97	12	9	12.7	15.2
2664.02.16	9	15	16	20	54	19	15.9	13	53.2	6	31.75	13.5	9	14.3	16.8
2664.02.20	11	18	20	24	60.3	19	17.5	14	59.5	5	33.53	16.5	11	17.5	20
2664.02.25	13.5	20	25	29	69.9	23.8	19.8	16	69.1	7	40.64	22	13.5	22.2	24.7
2664.02.32	13.5	20	32	36	69.9	23.8	19.8	16	69.1	7	40.64	22	13.5	22.2	24.7

subject to alterations

Triangle retainer, for punches ISO 8020 with anti-rotation element

2664.04.

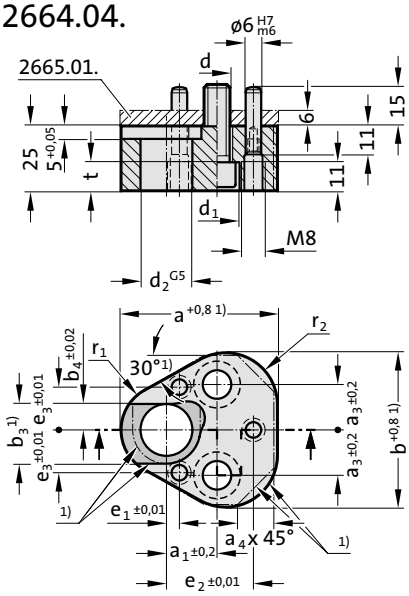



Execution:

The centres of the pinholes are the reference points for the position of the punch bore.
The dimensions e_1, e_2 and e_3 have a tolerance of ± 0.01 mm.
The triangle ball-lock retainers are interchangeable.

Note:

Pressure plate 2665.01. to be ordered separately for the receiving punch plate.

1) Contours may vary. Maximum dimensions are specified in the table.

2664.04. Triangle retainer, for punches ISO 8020 with anti-rotation element

Order No	d	d_1	d_2	a	a_1	a_3	a_4	b	b_3	b_4	e_1	e_2	e_3	t	r_1	r_2
2664.04.10	9	15	10	44.5	19	11.1	10	43.7	12	5	7.5	26.925	9	9	9.5	12
2664.04.13	9	15	13	50.8	19	14.3	12	50	15	6.5	6.5	29.97	12	9	12.7	15.2
2664.04.16	9	15	16	64	19	15.9	13	53.2	18	8	6	31.75	13.5	9	14.3	16.8
2664.04.20	11	18	20	60.3	19	17.5	14	59.5	23	10	5	33.53	16.5	11	17.5	20
2664.04.25	13.5	20	25	69.9	23.8	19.8	16	69.1	28	12.5	7	40.64	22	13.5	22.2	24.7
2664.04.32	13.5	20	32	69.9	23.8	19.8	16	69.1	35	16	7	40.64	22	13.5	22.2	24.7

Accessories for Retainers, triangular, for Punches, to ISO 8020

2192.10. 236.1. 2192.72. 2665.01.

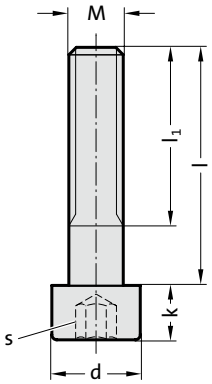

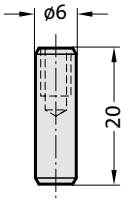

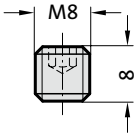

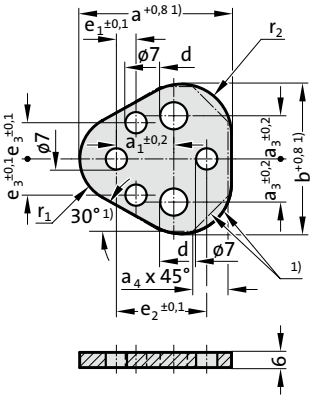

Retainer	Ø d_2	Socket head cap screw	Dowel pin	Pin screw	Pressure plate
2664.02./04.	10	2192.10.08.035	236.1.0600.020	2192.72.08.008	2665.01.10
	13	2192.10.08.035	236.1.0600.020	2192.72.08.008	2665.01.13
	16	2192.10.08.035	236.1.0600.020	2192.72.08.008	2665.01.16
	20	2192.10.10.035	236.1.0600.020	2192.72.08.008	2665.01.20
	25	2192.10.12.035	236.1.0600.020	2192.72.08.008	2665.01.25
	32	2192.10.12.035	236.1.0600.020	2192.72.08.008	2665.01.32

subject to alterations

Accessories



Stripping unit



2431.7.

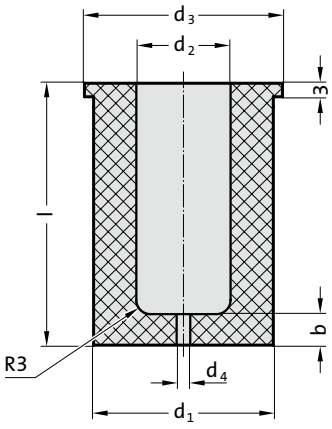

Installation example:

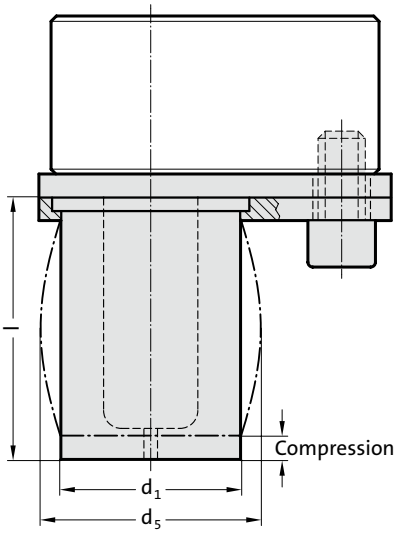

Material:

FIBROFLEX® 95 Shore A

Note:

Stripping units can be used for retainers 2664.02./.04./.05./.06.

* values for the stripping force are dependent on a number of parameters (e.g. lubricant, temperature etc.) and may vary from those given here.

** max spring travel should not exceed 15% of the length

2431.7. Stripping unit

						Stripping unit lenght l				
d_2	d_1	d_3	d_4	$d_{5\ max.}$	b	35	43	53	63	73
10	18	21	1,6	22	6	O	●	●	●	
13	23	26	3	26,5	6	O	●	●	●	●
16	28	31	3	34	6	O	●	●	●	●
20	33	36	3	38	7	O	●	●	●	●
25	40	43	3	47,6	7	O	●	●	●	●
32	50	55	3	57,9	7	O	●	●	●	●
38	60	65	3	69,6	8		O	O	O	O
40	60	65	3	69,6	8		●	●	●	O
						Punch lengths in use				
			Ball-lock punch, light duty			63	71	80	90	100
			Ball-lock punch, heavy duty			71	80	90	100	110
			Precision punch ISO 8020			-	71	80	90	100
			O = Special measures upon request							

Spring travel**	3 mm	6 mm	9 mm	3 mm	6 mm	9 mm	3 mm	6 mm	9 mm	3 mm	6 mm	9 mm	3 mm	6 mm	9 mm
Length	35	35	35	43	43	43	53	53	53	63	63	63	73	73	73
d_2	Stripping forces (N)*														
10	1300	-	-	1060	1820	-	900	1650	-	720	1450	1860	-	-	-
13	2100	-	-	1700	2850	-	1460	2610	-	1170	2320	2910	930	2080	2500
16	3000	-	-	2310	3900	-	1990	3560	-	1590	3150	3980	1270	2810	3440
20	3500	-	-	2900	4900	-	2500	4470	-	2000	3950	5000	1590	3420	4330
25	5400	-	-	4440	7520	-	3810	6860	-	3050	6050	7680	2420	5390	6780
32	8400	-	-	6840	11390	-	5880	10450	-	4700	9310	11640	3740	8370	10280
38	-	-	-	9280	19740	-	8140	15890	-	6440	11570	18030	5460	8850	11680
40	-	-	-	10100	20190	-	8650	17300	-	6890	13780	20670	6000	9800	12700

Ordering example:

Stripping unit	=	2431.7.
d_2 = 10 mm	=	10.
l = 53 mm	=	53
Order number	=	2431.7.10.53

subject to alterations

Stripping unit - Pressure plate

2667.1.

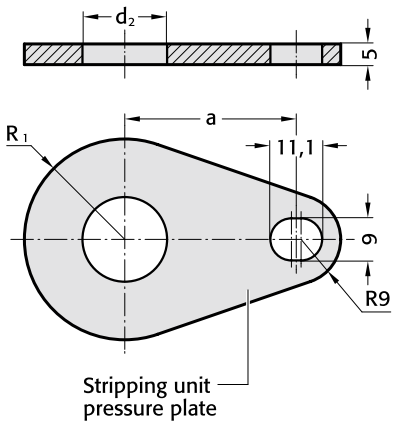

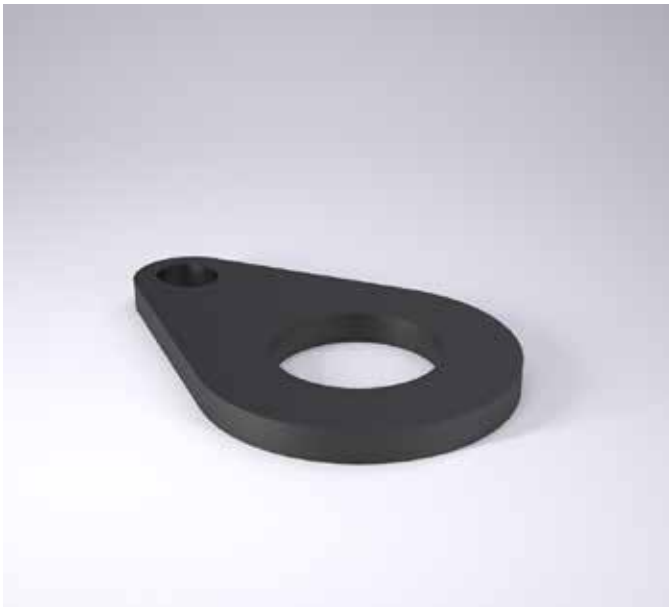

2667.1. Stripping unit - Pressure plate

Order No	d_2	R_1	a
2667.1.10	10	13	28
2667.1.13	13	15.5	31
2667.1.16	16	18	32.9
2667.1.20	20	20.5	34.8
2667.1.25	25	24	39.8
2667.1.32	32	31	41.3
2667.1.38	38	36	45
2667.1.40	40	36	45

Note:

Pressure plate, mounting plate and screw must all be ordered individually.

Mounting example

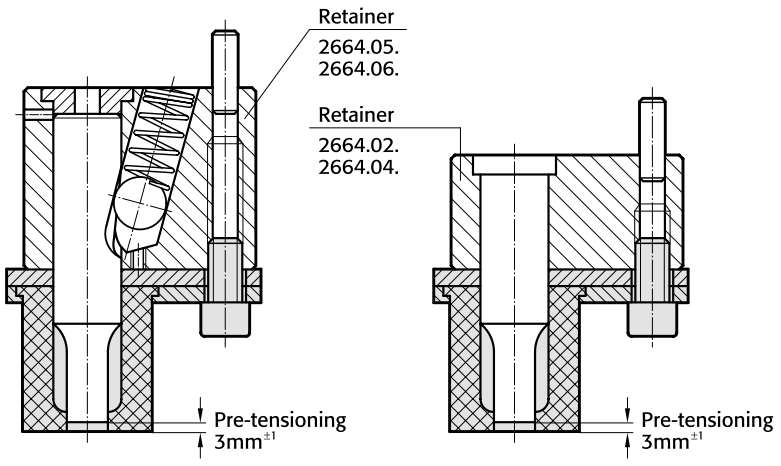

Stripping unit - Mounting plate



2667.2.

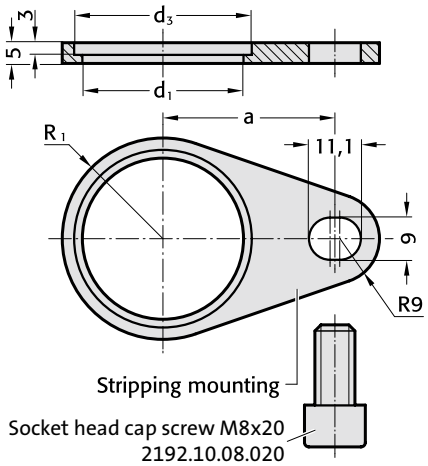

Note:

Pressure plate, mounting plate and screw must all be ordered individually.

2667.2. Stripping unit - Mounting plate

Order No	d_2	d_1	d_3	R_1	a
2667.2.10	10	19	22	13	28
2667.2.13	13	24	27	15.5	31
2667.2.16	16	29	32	18	32.9
2667.2.20	20	34	37	20.5	34.8
2667.2.25	25	41	44	24	39.8
2667.2.32	32	51	56	31	41.3
2667.2.38	38	61	66	36	45
2667.2.40	40	61	66	36	45

Mounting example

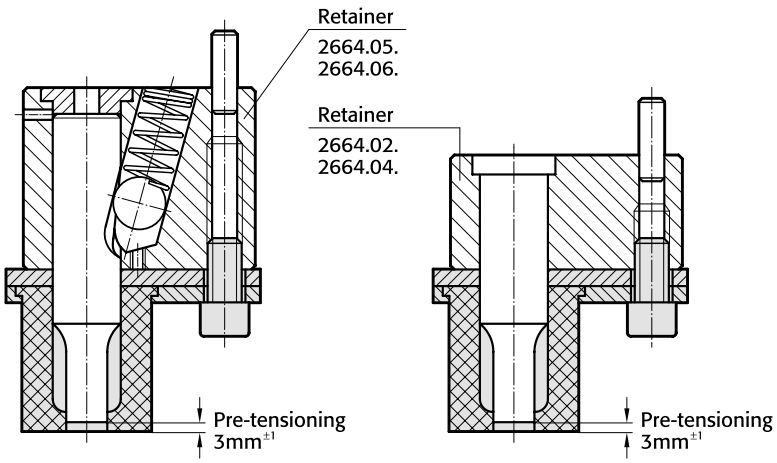

subject to alterations

Elastomer Stripper



Mounting example

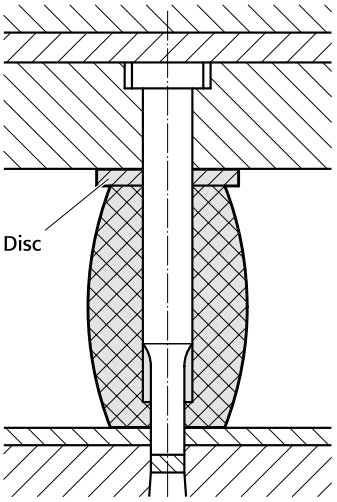

243.7.

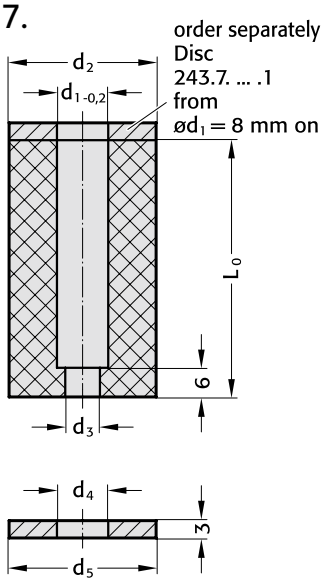

Description:

Repairs, sharpening and modifications on dies equipped with elastomer strippers do not necessitate the dismantling of a stripper plate, thus becoming very expedient.
Any marring of delicate part surfaces is precluded. This makes elastomer strippersideal for all painted, anodized, plastic-coated and polished parts. FIBROFLEX® Elastomer Strippers are resistant against oils and greases.

Material:

FIBROFLEX®
Hardness: 95 Shore A

Application:

Especially in large dies, where the use of elastomer strippers does away with the need of huge stripper plates.

Mounting:

Push stripper over punch, where it will stay put on account of its elasticity.
No other form of retention will be required.
A single press stroke will then pierce a hole through the bottom portion of the stripper that matches the punch shape exactly.

243.7. Elastomer Stripper

			L_0		
d_1	d_2	d_3	Stock lengths*	39	47	56
4	17	1.6		●	●	●
5	17	1.6		●	●	●
6	19	1.6		●	●	●
6.3	19	1.6		●	●	●
8	21	3		●	●	●
10	23	3		●	●	●
12.5	26	3		●	●	●
13	26	3		●	●	●
16	30	3		●	●	●
20	38	3		●	●	●
25	50	3		●	●	●
32	55	3		●	●	●
38	60	3		●	●	●
40	63	3		●	●	●

*other lengths are available on request (max. 56 mm)

Ordering Code (example):

Elastomer Stripper		=243.7.
Inside diameter d_1	13 mm=	130.
Length L_0		
Stock lengths	39 mm=	039
Order No		=243.7. 130.039

subject to alterations

Stop washer

243.7. .1

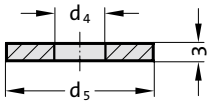



Material:
Steel

243.7. .1 Stop washer

Order No	d_4	d_5
243.7.085.1	8.5	21
243.7.105.1	10.5	23
243.7.130.1	13	26
243.7.135.1	13.5	26
243.7.165.1	16.5	30
243.7.205.1	20.5	38
243.7.255.1	25.5	50
243.7.325.1	32.5	55
243.7.385.1	38.5	60
243.7.405.1	40.5	63

Special Punches, Custom made
High-Precision Special Parts to Customer´s Drawings



FIBRO manufactures Special Form Punches and -Matrices on most modern equipment. Projection Form Grinding, Creep Feed Grinding, EDM and Wire-EDM are used acc. to design details.

Many years of experience enable FIBRO to chose best suitable materials and methods.
We manufacture to customer´s drawings:

- Piercing Punches
- Draw Punched
- Form Punches
- Pre-Extrusion Punches and Ejectors for Bolt Manufacturing
- Flow-Forming Punches
- Punches with 30°-Conical Heads or other head shapes

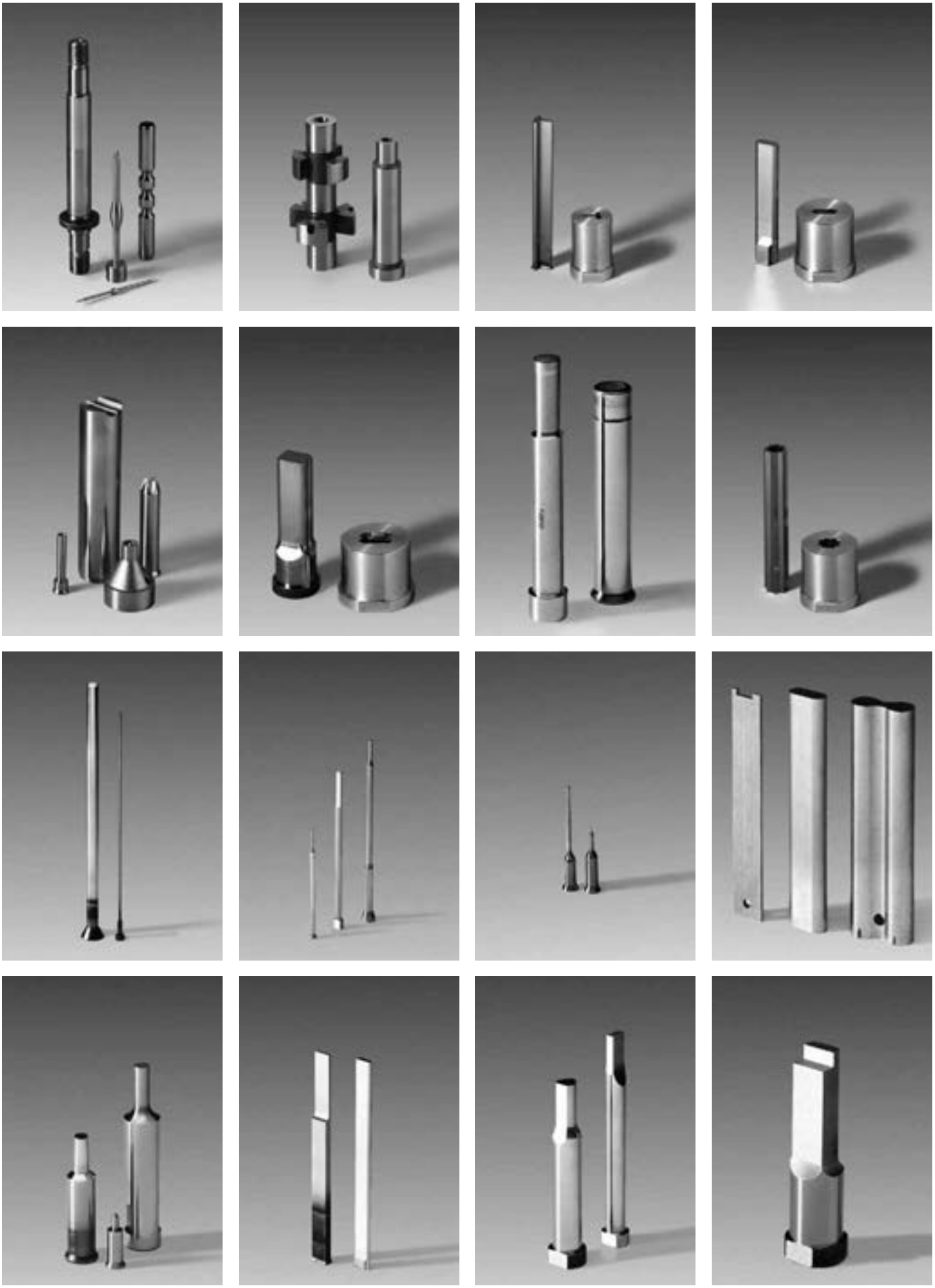

Punch without head, square / rectangular, Shape A



230.

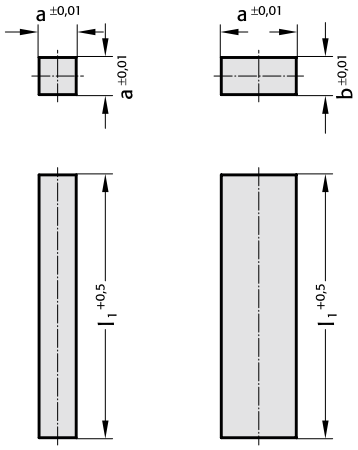

230. Punch without head, square / rectangular, Shape A

a	b	l_1	l
1 - 8	1	73.5	71
2 - 10	2	73.5	71
3 - 12	3	73.5	71
4 - 12	4	73.5	71
5 - 15	5	73.5	71
6 - 20	6	73.5	71
7 - 24	7	73.5	71
8 - 24	8	73.5	71
9 - 28	9	73.5	71
10 - 34	10	73.5	71
12 - 34	12	73.5	71

Material:

HSS
Order No 230.3.
Hardness:
Shaft 64 ± 2 HRC

Description of FIBRO materials for tool and die components see at the beginning of Chapter E.

Execution:

Punch shaft precision ground.

l_1: Stock length of square punches: 73,5 mm. Other materials and dimensions on request.

Ordering Code (example):

Punch without head, square / rectangular, Shape A		=230.	
Material MAT	HSS	=	3.
Punch cutting length a	6 mm	=	0600.
Punch cutting width b	6 mm	=	0600.
Nominal ordering length l	71	=	071
Order No		=230.3.	0600. 0600. 071

subject to alterations

Punch with head, square / rectangular, Shape A

231.

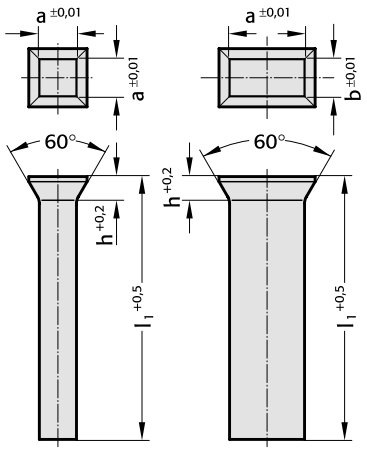



Material:

HSS
Order No 231.3.
Hardness:
Shaft 64 ± 2 HRC
Head 52 ± HRC

Description of FIBRO materials for tool and die components see at the beginning of Chapter E.

Execution:

Punch shanks precision ground.
Heads hot upset forged - ground on special request.

l_1: Stock length of square punches: 71 mm. Other materials anddimensions on request.

231. Punch with head, square / rectangular, Shape A

a	b	h	l_1
1 - 8	1	1.2	71
2 - 10	2	1.4	71
3 - 12	3	1.8	71
4 - 12	4	1.8	71
5 - 15	5	1.8	71
6 - 20	6	2	71
7 - 24	7	2.8	71
8 - 24	8	2.8	71
9 - 28	9	2.8	71
10 - 34	10	2.8	71
12 - 34	12	2.8	71

Ordering Code (example):

Punch with head, square / rectangular, Shape A		=231.	
Material MAT	HSS	= 3.	
Punch cutting length a	6 mm	= 0600.	
Punch cutting width b	6 mm	= 0600.	
Length l_1	71 mm	= 71	
Order No		=231.3. 0600. 0600. 71	

FIBRO

Dowel pin with internal extracting thread, similar to DIN EN ISO 8735



236.1.

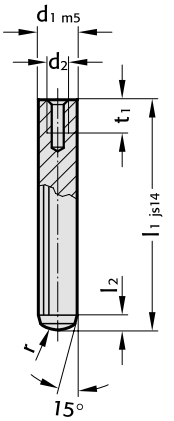

Material:

Steel
Hardness 60 ± 2 HRC

Execution:

Hardened and ground to finest finish.
FIBRO Dowel Pins are manufactured with the exacting requirements of high class diemaking in mind. Whereas DIN EN ISO 8735 stipulates ISO Class 6 for dowels, we produce our pins to m5.
FIBRO Dowels with internal extracting thread deviate from DIN in that they are case-hardened and that a smaller thread is used. This increases the crossection around the threaded hole and thus prevents breaking.

236.1. Dowel pin with internal extracting thread, similar to DIN EN ISO 8735

d_1	d_2	t_1	l_2	r	l_1	16	18	20	24	28	32	36	40	45	50	55	60	70	80	90	100	120
6	4	6	2.1	6		●	●	●	●	●	●	●	●	●	●	●	●					
8	5	8	2.6	8				●	●	●		●	●	●	●	●	●	●	●	●	●	
10	6	10	3	10					●	●	●	●	●	●	●	●	●	●	●	●	●	
12	6	12	3.8	12						●	●	●	●	●	●	●	●	●	●	●	●	●
14	8	12	4	16							●	●	●	●	●	●	●	●	●	●	●	●
16	8	16	4.7	16							●	●	●	●	●	●	●	●	●	●	●	●
20	10	20	6	20								●	●	●	●	●	●	●	●	●	●	●
25	16	24	6	25										●	●	●	●	●	●	●	●	●

Ordering Code (example):

Dowel pin with internal extracting thread, similar to DIN EN ISO 8735		=236.1.
Diameter d_1	14 mm =	1400.
Length l_1	32 mm =	032
Order No		=236.1. 1400.032

subject to alterations

Dowel pin with internal extracting thread, similar to DIN EN ISO 8735

2361.1.

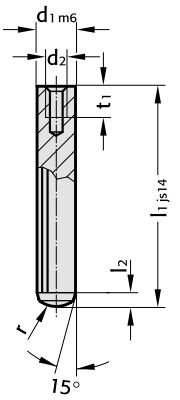



Material:

Steel
Hardness 60 ± 2 HRC

Execution:

Hardened and ground to finest finish.
FIBRO Dowel Pins are manufactured with the exacting requirements of high class diemaking in mind.
FIBRO Dowels with internal extracting thread deviate from DIN in that they are case-hardened and that a smaller thread is used. This increases the crossection around the threaded hole and thus prevents breaking.

2361.1. Dowel pin with internal extracting thread, similar to DIN EN ISO 8735

d_1	d_2	t_1	l_2	r	l_1	8	10	12	14	16	18	20	22	24	26	28	30	32	36	40	45	50	55	60	70	80	90	100	120
4	3	4.5	1.3	4			●	●	●	●	●	●		●		●	●	●	●	●		●							
5	3	6	1.7	5		●	●	●	●	●	●	●		●		●	●	●	●	●	●	●	●	●					
6	4	6	2.1	6				●	●	●	●	●	●	●	●	●	●	●	●	●	●	●	●	●	●	●			
8	5	8	2.6	8						●	●	●	●	●	●	●	●	●	●	●	●	●	●	●	●	●	●	●	●
10	6	10	3	10						●	●	●		●		●	●	●	●	●	●	●	●	●	●	●	●	●	●
12	6	10	3.8	12								●		●		●	●	●	●	●	●	●	●	●	●	●	●	●	●
14	8	12	4	14												●		●	●	●	●	●	●	●	●	●	●	●	●
16	8	12	4.7	16														●	●	●	●	●	●	●	●	●	●	●	●
20	10	16	6	20															●	●	●	●	●	●	●	●	●	●	●

Ordering Code (example):

Dowel pin with internal extracting thread, similar to DIN EN ISO 8735		=	2361.1.
Diameter d_1	10 mm	=	1000.
Length l_1	16 mm	=	016
Order No		=	2361.1.1000.016

FIBROZIPP



236.001 Dowel Pin Extractor FIBROZIPP

Extraction tool for the fast and convenient removal of dowels with internal extracting thread – also for shafts, plugs and other machine components.

The tool comes with interchangeable adaptors and screws, to fit all threads from M3 to M16.

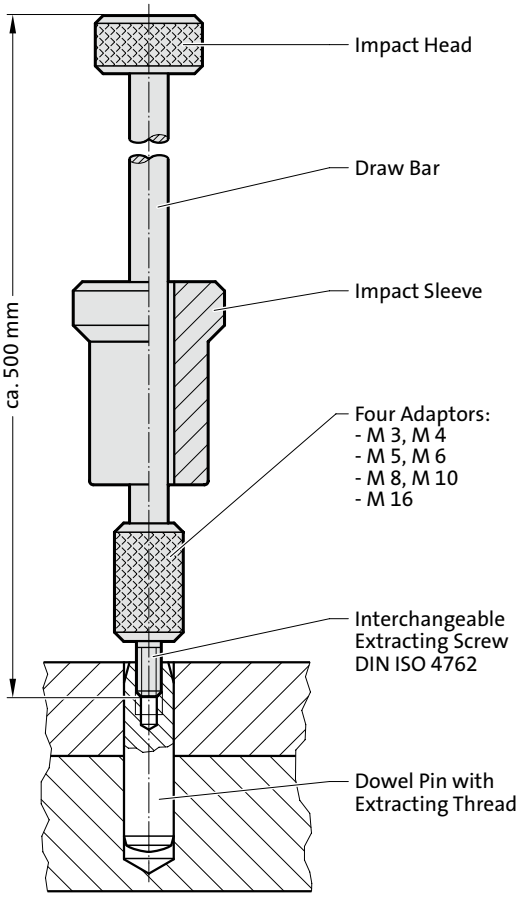

subject to alterations

Liner bush for dowel pin, for bonding



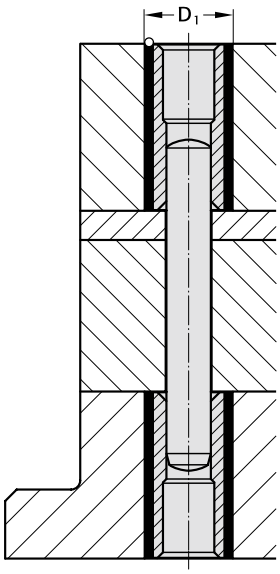

265.1.

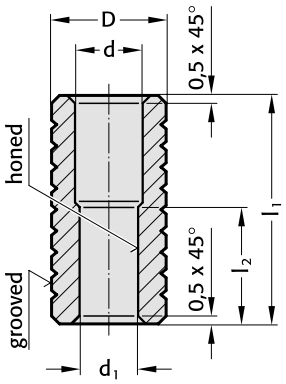

Description:

Dowel liner bushes are used where precisely positioned, unhardened parts are often changed or must be replaced, e.g. in precision tool construction.

Material:

WS
Hardness 54 ± 2 HRC

Epoxy-Bonding

The jig-ground pin holes of the hardened matrix are joined with the dowel liner bush by means of a dowel pin 235.1. Retainer holes for dowel liner bushes should be approximately 2 mm larger in diameter than the bush O.D. – a coarse finish is desirable. Following exact positioning/aligning, FIBROLIT® ZWO or FIBROFIX® SECHS is used for bonding.

265.1. Liner bush for dowel pin, for bonding

d_1	d	D	D_1	l_1	l_2
6	7	10	12	25	12
8	9	12	14	30	16
10	11	16	18	36	20

Ordering Code (example):

One Dowel Liner Bush – only –

Dowel Liner Bush	= 265.
Material: Tool Steel	= 1.
d_1 = ∅ 8,0 mm	= 0800.
Quantity: one	= 1
Order No	= 265.1.0800.1

Ordering Code (example):

One Dowel Liner Bush + Matching Dowel

Dowel Liner Bush	= 265.
Material: Tool Steel	= 1.
d_1 = ∅ 8,0 mm	= 0800.
Quantity: one	= 1.
Dowel: length = 40 mm	= 040
Order No	= 265.1.0800.1.040

Ordering Code (example):

Two Dowel Liner Bushes + one Dowel

Dowel Liner Bush	= 265.
Material: Tool Steel	= 1.
d_1 = ∅ 8,0 mm	= 0800.
Quantity: two	= 2.
Dowel: length = 50 mm	= 050
Order No	= 265.1.0800.2.050

subject to alterations

Liner bush for dowel pin, for push fit

2650.1.

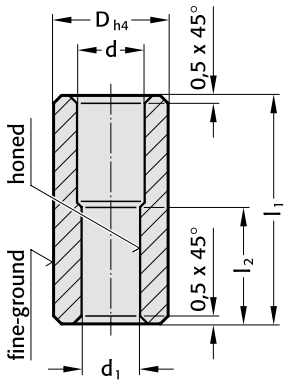

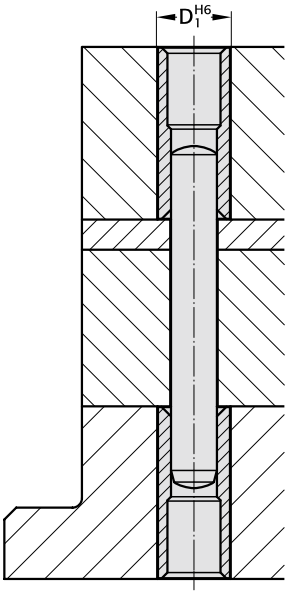



Description:

Dowel liner bushes are used where precisely positioned, unhardened parts are often changed or must be replaced, e.g. in precision tool construction.

Material:

WS
Hardness 54 ± 2 HRC

Slip-Fit Bonding:

The position of the bush is given by push fit hole tolerance H 6.The adhesive order no. 281.648 provides optimum bush retention whilst offering the following

advantages:

- high accuracy and stiffness
- no problems to find position when changing bushings

We do not recommend to press fit bushings.

2650.1. Liner bush for dowel pin, for push fit

d_1	d	D	l_1	l_2
6	7	10	25	12
8	9	12	30	16
10	11	16	36	20

Ordering Code (example):

One Dowel Liner Bush – only –

Dowel Liner Bush	= 2650.
Material: Tool Steel	= 1.
d_1 = ∅ 8,0 mm	= 0800.
Quantity: one	= 1
Order No	= 2650.1.0800.1

Ordering Code (example):

One Dowel Liner Bush + Matching Dowel

Dowel Liner Bush	= 2650.
Material: Tool Steel	= 1.
d_1 = ∅ 8,0 mm	= 0800.
Quantity: one	= 1.
Dowel: length = 40 mm	= 040
Order No	= 2650.1.0800.1.040

Ordering Code (example):

Two Dowel Liner Bushes + one Dowel

Dowel Liner Bush	= 2650.
Material: Tool Steel	= 1.
d_1 = ∅ 8,0 mm	= 0800.
Quantity: two	= 2.
Dowel: length = 50 mm	= 050
Order No	= 2650.1.0800.2.050

FIBRO

Dowel pin similar to DIN EN ISO 8734



235.1.

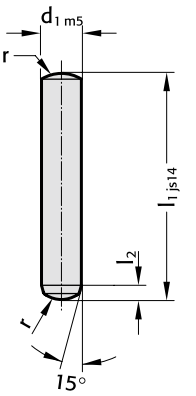

Material:

Steel
Hardness 60 ± 2 HRC

Execution:

Hardened and ground to finest finish.
FIBRO Dowel Pins are manufactured with the exacting requirements of high class diemaking in mind. Whereas DIN EN ISO 8734 stipulates ISO Class 6 for dowels, we produce our pins to m5.

235.1. Dowel pin similar to DIN EN ISO 8734

d_1	l_2	r	l_1	6	8	10	12	14	16	18	20	24	28	32	36	40	45	50	55	60	70	80	90	100	120	130	140
1	0.48	1			●	●	●																				
1.5	0.62	1.6		●	●	●	●	●	●																		
2	0.78	2		●	●	●	●	●	●	●	●	●	●	●	●												
2.5	0.95	2.5		●	●	●	●	●	●	●	●	●	●	●	●												
3	1.1	3		●	●	●	●	●	●	●	●	●	●	●	●	●	●										
4	1.4	4		●	●	●	●	●	●	●	●	●	●	●	●	●	●	●	●	●							
5	1.7	5			●	●	●	●	●	●	●	●	●	●	●	●	●	●	●	●	●	●					
6	2.1	6				●	●	●	●	●	●	●	●	●	●	●	●	●	●	●	●	●	●	●			
8	2.6	8				●	●	●	●	●	●	●	●	●	●	●	●	●	●	●	●	●	●	●	●		
10	3	10							●	●	●	●	●	●	●	●	●	●	●	●	●	●	●	●	●		
12	3.8	12									●	●	●	●	●	●	●	●	●	●	●	●	●	●	●	●	
14	3.8	16													●	●	●	●	●	●	●	●	●	●	●		
16	4.7	16														●	●	●	●	●	●	●	●	●	●		●
20	6	20																	●	●	●	●	●	●	●		●

Ordering Code (example):

Dowel pin similar to DIN EN ISO 8734		=	235.1.
Diameter d_1	6 mm	=	0600.
Length l_1	10 mm	=	010
Order No		=	235.1. 0600. 010

subject to alterations

Dowel pin similar to DIN EN ISO 8734

2351.1.

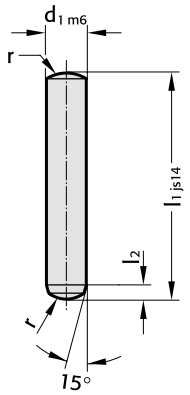



Material:

Steel
Hardness 60 ± 2 HRC

Execution:

Hardened and ground to finest finish.

2351.1. Dowel pin similar to DIN EN ISO 8734

d_1	l_2	r	l_1	4	5	6	8	10	12	14	16	18	20	22	24	26	28	30	32	36	40	45	50	55	60	70	80	90	100	120
1	0.4	1		●	●	●	●	●	●																					
1.5	0.5	1.6		●	●	●	●	●	●	●	●		●	●	●															
2	0.6	2		●	●	●	●	●	●	●	●	●	●	●	●	●	●	●	●		●									
2.5	0.7	2.5			●	●	●	●	●	●	●	●	●	●	●	●	●	●	●											
3	0.8	3			●	●	●	●	●	●	●	●	●	●	●	●	●	●	●	●	●	●	●		●					
4	1	4				●	●	●	●	●	●	●	●	●	●	●	●	●	●	●	●	●	●		●	●	●			
5	1.2	5					●	●	●	●	●	●	●	●	●	●	●	●	●	●	●	●	●	●	●	●	●			
6	1.5	6					●	●	●	●	●	●	●	●	●	●	●	●	●	●	●	●	●	●	●	●	●	●		
8	1.8	8								●	●	●	●	●	●	●	●	●	●	●	●	●	●	●	●	●	●	●		
10	2	10									●	●	●	●	●	●	●	●	●	●	●	●	●	●	●	●	●	●	●	
12	2.5	12											●		●	●	●	●	●	●	●	●	●	●	●	●	●	●	●	
14	2.5	16													●		●	●	●	●	●	●	●	●	●	●	●	●	●	
16	3	16													●	●	●	●	●	●	●	●	●	●	●	●	●	●	●	
20	4	20																		●	●	●	●	●	●	●	●	●	●	

Ordering Code (example):

Dowel pin similar to DIN EN ISO 8734		=2351.1.
Diameter d_1	6 mm=	0600.
Length l_1	8 mm=	008
Order No		=2351.1. 0600. 008

FIBRO

Drill bush with collar, DIN 172, Shape A

276.



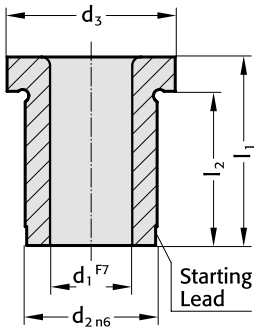

Material:

Case hardened steel
Hardness 740 ± 40 HV 10

Execution:

Diameters d_1, d_2 and shoulder precision ground.

276. Drill bush with collar, DIN 172, Shape A

d_1	d_2	d_3	l_1	6	8	9	10	12	16	20	25	28	30	35	36	45	56	67	78
0.4 - 1	3	6	l_2	4		7													
1.1 - 1.8	4	7		4		7													
1.9 - 2.6	5	8		4		7													
2.7 - 3.3	6	9			5.5			9.5	13.5										
3.4 - 4	7	10			5.5			9.5	13.5										
4.1 - 5	8	11			5.5			9.5	13.5										
5.1 - 6	10	13					7		13	17									
6.1 - 8	12	15					7		13	17									
8.1 - 10	15	18						9		17	22								
10.1 - 12	18	22						8		16	21								
12.1 - 15	22	26							12			24			32				
15.1 - 18	26	30							12			24			32				
18.1 - 22	30	34								15					31	40			
22.1 - 26	35	39								15					31	40			
26.1 - 30	42	46									20					40	51		
30.1 - 35	48	52									20					40	51		
35.1 - 42	55	59											25				51	62	
42.1 - 48	62	66											24				50	61	
48.1 - 55	70	74											24				50	61	
55.1 - 63	78	82												29				61	72

Ordering Code (example):

Drill bush with collar, DIN 172, Shape A		=276.1.
Guide diameter d_1	12.1 mm	=1210.
Length l_1	16 mm	=016
Order No		=276.1.1210.016

subject to alterations

Drill bush without collar, DIN 179, Shape A

277.

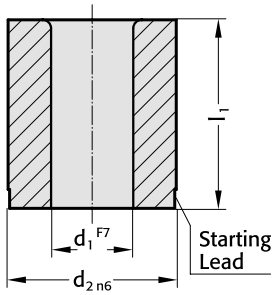



Material:
Case hardened steel
Hardness 740 ± 40 HV 10

Execution:
Diameters d_1 and d_2 precision ground.

277. Drill bush without collar, DIN 179, Shape A

d_1	d_2	l_1	6	8	9	10	12	16	20	25	28	30	35	36	45	56	67	78
0.4 - 1	3		●		●													
1.1 - 1.8	4		●		●													
1.9 - 2.6	5		●		●													
2.7 - 3.3	6			●			●	●										
3.4 - 4	7			●			●	●										
4.1 - 5	8			●			●	●										
5.1 - 6	10					●		●	●									
6.1 - 8	12					●		●	●									
8.1 - 10	15						●		●	●								
10.1 - 12	18						●		●	●								
12.1 - 15	22							●			●			●				
15.1 - 18	26							●			●			●				
18.1 - 22	30								●					●	●			
22.1 - 26	35								●					●	●			
26.1 - 30	42									●					●	●		
30.1 - 35	48									●					●	●		
35.1 - 42	55											●				●	●	
42.1 - 48	62											●				●	●	
48.1 - 55	70											●				●	●	
55.1 - 63	78												●				●	●

Ordering Code (example):

Drill bush without collar, DIN 179, Shape A		=277.1.
Guide diameter d_1	12.1 mm	= 1210.
Length l_1	16 mm	= 016
Order No		=277.1. 1210. 016

Gauge pin DIN 2269



240.1./2.

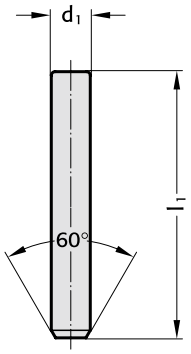

Material:

Alloy tool steel, hardened and tempered. Age-treated repeatedly.
Hardness 60 ± 2 HRC

Execution:

precision ground
Quality class I: diameter tolerance ±0,001
Quality class II: diameter tolerance ±0,002

Single pins:
Quality class I 240.1.
Quality class I 240.2.

Small set:
91 gauge pins from ø 1-10 mm in steps of 0,1 mm, complete in wooden box.
Quality class I 240.51.
Quality class II 240.52.

Large set:
273 gauge pins from ø 1-10 mm in steps of 0,1 mm, plus one each. 0,01 mm-oversize/ undersize pin – complete in wooden box
Quality class I 240.41.
Quality class II 240.42.

Special sets:
Supplied to customer's requirements in respect of assortment and quality class. All gauge pins from 3 mm upward are marked with their actual size.

Ordering Code (example):

Gauge pin DIN 2269		=240.	
Quality class KL	1	=	1.
Diameter d_1	0.29 mm	=	0029
Order No		=240.	1. 0029

240.1./2. Gauge pin DIN 2269

d_1	l_1
0.29 - 6	50
6.01 - 20	70

Direct gauging of bore diameters

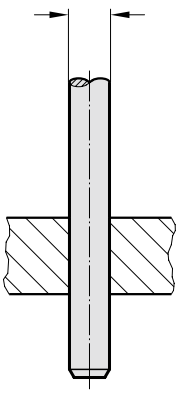

Measurement of centre-distance between two bores

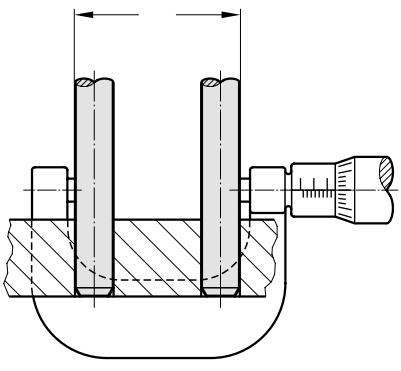

Concentricity check on a bush

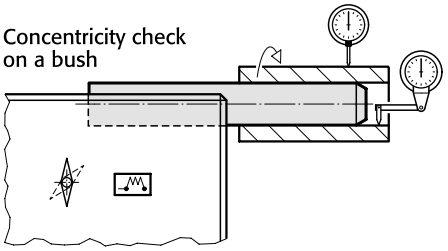

Measurements on prismatic faces

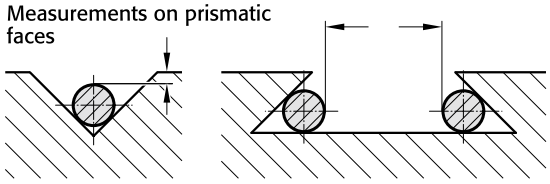

subject to alterations

Gauge Pin Holders
Wooden Boxes





Calibration of a comparator

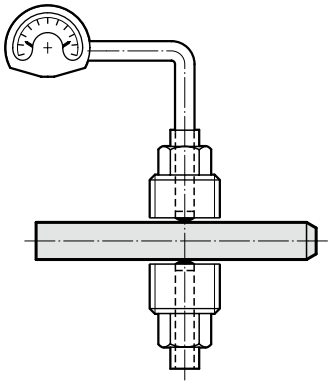

Inspection for squareness of a bore

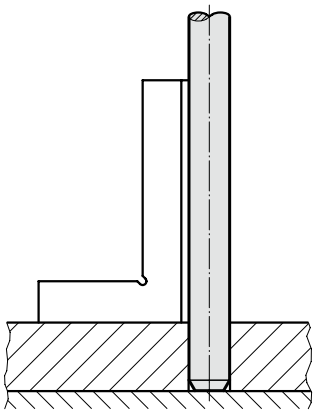

Check on parallelism

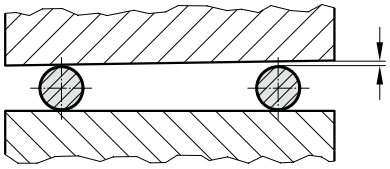

Measuring of gear teeth, threads etc.

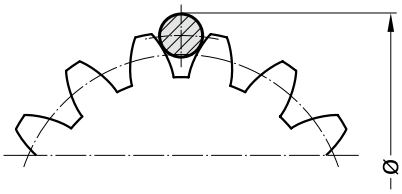

240.45. Gauge Pin Holders

(without pins)	for diameters	Order No
	von 1–2	240.45.1
	von 2–4	240.45.2
	von 4–6	240.45.3
	von 6–8	240.45.4
	von 8–10	240.45.5

Gauge Pin Holders are double-ended, to carry two pins e.g. for go – no go measurements etc.

Wooden boxes: (without pins)	with drilled holes, for the safe and orderly storage of gauge pins – each hole marked with the requisite pin size.	Order No
	Large Set of approx. 270 Pins size: 250×90×390	240.91
	Small Set of approx. 90 Pins size: 155×90×285	240.92
	Boxes complete with carrier board inset	
	Class I-Accuracy	240.9x.1
	Class II-Accuracy	240.9x.2

Ordering code (example):

Gauge pin box – approx. 270 pins	= 240.91.
Class I-Accuracy	= 1
Order No	= 240.91.1

subject to alterations

High Precision Gauge Pins with Handle
High Precision Gauge Pins – Boxed Sets

240.11./22.

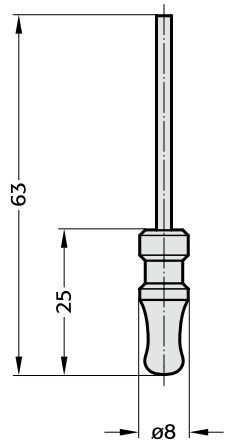



240.11./22. High-Precision Gauge Pins with Handle

The Gauge Pins are firmly fixed to the handle. Each Pin is marked with its true diameter.

Single Gauge Pins:	∅ 0,3 – 3,0 mm, In dia. steps of 0.01 mm	Order No
	Class I-Accuracy	240.11.
	Class II-Accuracy	240.22.
Assortment:	84 Gauge Pins from 0.3 – 3.0 mm, in dia. steps of 0.1 mm plus one each pin with undersize 0.01 and oversize 0.01 mm (for example 0.29 – 0.30 – 0.31 etc.)	
	Class I-Accuracy	240.31
	Class II-Accuracy	240.32
Special Assortments:	to customer's specifications in respect of class of accuracy	

Material:

Alloy tool steel, hardened and tempered.
Repeatedly age-treated.
Hardness 60 ± 2 HRC.
fine-ground
Class II-Accuracy ±0.001
Class II-Accuracy ±0.002
to DIN 2269

Ordering Code (example):

Gauge Pin	= 240.	
Class I-Accuracy, with handle	=	11.
d_1 = 1,5 mm	=	0150
Order No	= 240.11.0150	

Execution:

Wooden boxes for Gauge Pins – with drilled holes in wooden tray insert. Each hole marked with true size of pin.

External dimensions: 155x90x285 mm



FIBRO

Punching and embossing unit with matrix for punched holes and self tapping screws



Material:
HSS

Execution:
The punching and embossing unit with matrix consists of:
1 x embossing die
1 x punch die
1 x matrix

Sheet metal thickness:
max. 0,6 mm = 2282.01.035/039
max. 0,8 mm = 2282.01.042
max. 0,9 mm = 2282.01.048
max. 1,0 mm = 2282.01.055/063

2282.01. Punching and embossing unit with matrix for punched holes and self tapping screws

Order No	Nominal - Ø = thread size	d_1	d_2	d_{3h6}	d_{4k6}	d_{5h6}	d_6	d_7	d_{8h6}	d_{9k6}	l_1	l_2	l_3	l_4	l_5
2282.01.035	B 3,5	2.75	3.2	7.5	3.75	2.7	2.7	3.1	7.5	3.75	31.3	28	74.5	71.5	60
2282.01.039	B 3,9	3.05	3.4	7.5	3.75	3	3	3.6	7.5	3.75	31.3	28	74.5	71.5	60
2282.01.042	B 4,2	3.15	3.5	8.5	4.25	3.1	3.1	3.7	8	4	31.3	28	74.5	71.5	60
2282.01.048	B 4,8	3.85	4.2	9	4.5	3.8	3.8	4.5	8	4	31.3	28	74.5	71.5	60
2282.01.055	B 5,5	4.35	4.8	9	4.5	4.3	4.3	5	8	4	31.3	28	74.5	71.5	60
2282.01.063	B 6,3	4.85	5.3	10.5	5.25	4.8	4.8	5.5	10	5	31.3	28	74.5	71.5	60

2282.01.xxx

2282.01.xxx.1 Embossing die

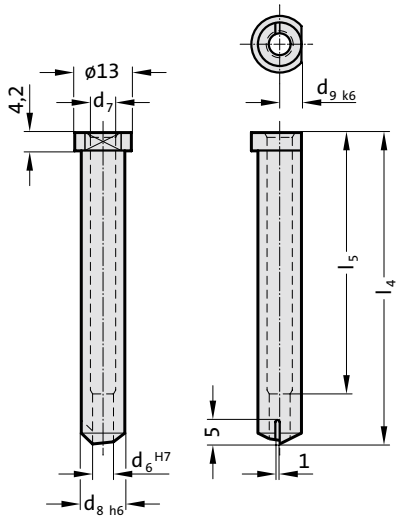

2282.01.xxx.2 Punch die

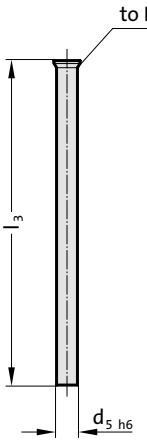

2282.01.xxx.3 Bottom die

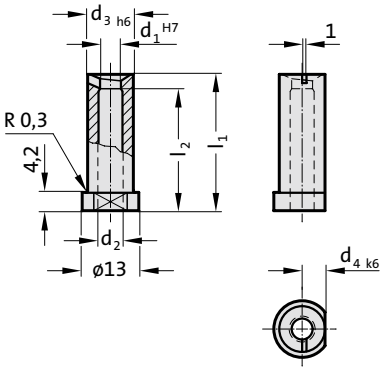

Example of application:

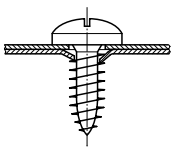

subject to alterations

A Die Sets

B Precision Ground Plates and Flat Bars

C Lifting and Clamping Devices

D Guide elements

E Ground Precision Components

F Springs

Compression springs, gas springs, elastomer springs
Spring and spacer units

G Elastomer-Bars, -Sheets, -Sections

H FIBRO Chemical Tooling Aids

J Peripheral Equipment

K Cam Units

L Standard Parts for Mould Making



Springs

Springs for dies, fixtures, moulds, machines, mechanisms. For various industrial uses.

FIBRO Compression Springs – a comprehensive range, rooted in the resolute quality consciousness on which our reputation was built. Applied equally to the selection and inspection of raw materials as well as to every step in manufacture.

Springs – a simple product by comparison. But a demanding one also if new standards are to be set by its reliability and performance.

A product whose failure in service always is very expensive, even disastrous in some cases.

A product therefore where it pays . . . to pay for the difference. Whose faults or qualities remain hidden at first. They prove themselves in the long run –!

FIBRO high performance springs – in four duty ranges. Made from selected grades of chrome-vanadium spring steel.
Cold-formed from special rolled wire sections. Capable of sustaining service loadings of exceptional serverity.
Identical fitting dimensions for all springs of common nominal size, facilitating development work. Packing a maximum of spring action into a minimum of design space

Up and down in endless repetition: FIBRO Compression Springs. From the tough stable of tool- and diemaking, where no quarters are given.

A spring range of almost 400 sizes. Each spring strictly to specification. Ends flattened and ground parallel. Surfaces ball shot peened for even greater spring resilience.

FIBRO Springs – for fit-and-forget performance. For confined spaces. For virtually no space at all. For aircraft · tractors · harvesters · dies jigs · fixtures · for machines from A to Z.

For all uses where the going is hard. A choice without regrets.

A special spring range for demanding applications in the manufacture of tools, machinery and jigs & fixtures.

Our spring systems are constantly being developed to cover the most varied requirements.
The spring type is selected to match specific customer requirements.

Special helical springs

Manufactured to DIN ISO 10243, the springs are available in four grades for high cyclic and constant loads.
The specially rolled wire profile is manufactured from high quality heat treated alloy steel.

FIBROFLEX® Springs

These rubber-elastic spring elements in Shorehardness ratings 80, 90, 95, are made from polyurethane elastomers. Benefits include high spring forces and good resilient damping behaviour.

FIBROELAST® Springs

As a superior alternative to rubber springs we offer polyurethane elastomer springs in Shore A hardness rating of 70.

Disc Springs

The required spring characteristics result from various laminations with multiple settings and combinations.

FIBRO Gas springs

close a gap where ever the accent is on accomodation of the utmot force component within a minimum of space – or where exceedingly large travel is demanded: FIBRO Gas springs take care of both demands, even in combination.

FIBRO

Contents

High performance compression springs - Description F22

High performance compression springs - Cyclic stress maxima/ minima as applicable to extended/ limited life F23

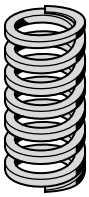

241.14.10. F24
High performance compression spring DIN ISO 10243

241.15.10. F24
High performance compression spring DIN ISO 10243

241.16.10. F25
High performance compression spring DIN ISO 10243

241.17.10. F25
High performance compression spring DIN ISO 10243

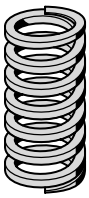

241.14.13. F26
High performance compression spring DIN ISO 10243

241.15.13. F26
High performance compression spring DIN ISO 10243

241.16.13. F27
High performance compression spring DIN ISO 10243

241.17.13. F27
High performance compression spring DIN ISO 10243

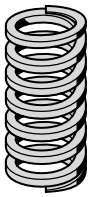

241.14.16. F28
High performance compression spring DIN ISO 10243

241.15.16. F29
High performance compression spring DIN ISO 10243

241.16.16. F30
High performance compression spring DIN ISO 10243

241.17.16. F31
High performance compression spring DIN ISO 10243

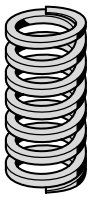

241.14.20. F32
High performance compression spring DIN ISO 10243

241.15.20. F33
High performance compression spring DIN ISO 10243

Contents

241.16.20. F34

High performance compression spring DIN ISO 10243

241.17.20. F35

High performance compression spring DIN ISO 10243

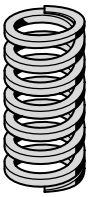

241.14.25. F36

High performance compression spring DIN ISO 10243

241.15.25. F37

High performance compression spring DIN ISO 10243

241.16.25. F38

High performance compression spring DIN ISO 10243

241.17.25. F39

High performance compression spring DIN ISO 10243



241.14.32. F40

High performance compression spring DIN ISO 10243

241.15.32. F41

High performance compression spring DIN ISO 10243

241.16.32. F42

High performance compression spring DIN ISO 10243

241.17.32. F43

High performance compression spring DIN ISO 10243

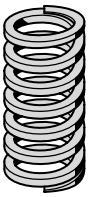

241.14.40. F44

High performance compression spring DIN ISO 10243

241.15.40. F45

High performance compression spring DIN ISO 10243

241.16.40. F46

High performance compression spring DIN ISO 10243

241.17.40. F47

High performance compression spring DIN ISO 10243



241.14.50. F48

High performance compression spring DIN ISO 10243

241.15.50. F49

High performance compression spring DIN ISO 10243

FIBRO

Contents

241.16.50. F50

High performance compression spring DIN ISO 10243

241.17.50. F51

High performance compression spring DIN ISO 10243

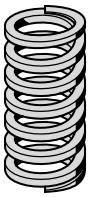

241.14.63. F52

High performance compression spring DIN ISO 10243

241.15.63. F53

High performance compression spring DIN ISO 10243



241.02. F54

Round wire compression spring

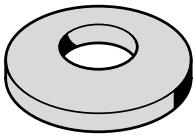

242.01. F55

Disc spring DIN 2093

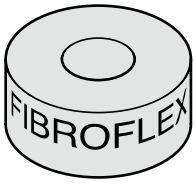

244.1. F58

FIBROFLEX®-Elastomer spring for FIBROFLEX®-Spring system

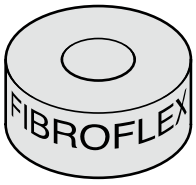

246.5. F60

FIBROFLEX®-Tubular spring element 80 Shore A, to DIN ISO 10069-1

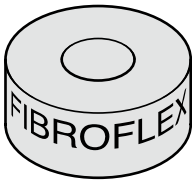

246.6. F62-81

FIBROFLEX®-Tubular spring element 90 Shore A, to DIN ISO 10069-1

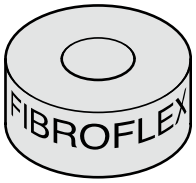

246.7. F64

FIBROFLEX®-Tubular spring element 95 Shore A, to DIN ISO 10069-1



2461.4. F66

FIBROELAST® Tubular spring element 70 Shore A

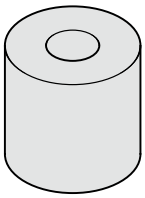

2461.2. F68

Tubular Spring Element, Rubber 70 Shore A

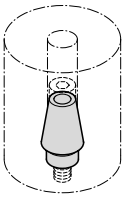

2441.5. F70

Locating bolt

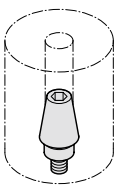

2441.6. F70

Locating bolt, threaded

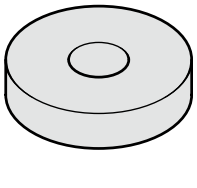

2441.3. F71

Stacking washer DIN ISO 10069-2

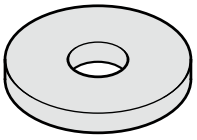

244.4. F71

Thrust washer

Contents



244.5. F72

Guide pin

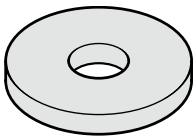

244.6. F72

Trust washer for elastomer springs

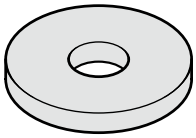

244.7. F73

Trust washer for compression springs

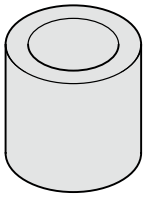

244.9. F74

Spacer tube

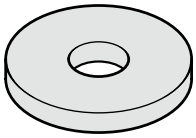

244.10.15. F75

Stop washer

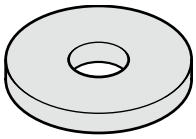

244.10. F76

Disc

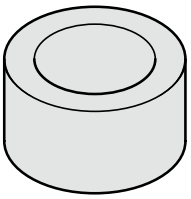

244.11. F76

Spacer sleeve

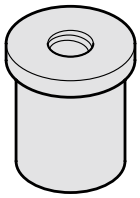

244.12. F77

Spacer plug

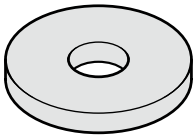

244.13. F77

Adjusting washer

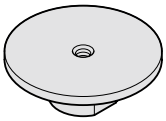

2441.14. F78

Threaded disc for elastomer springs



2441.15. F78

Threaded disc for compression springs

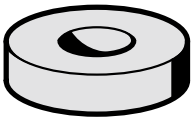

2450. F79

Shock absorbing washer

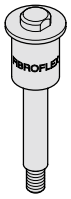

2441.18. F80

Retaining bolt

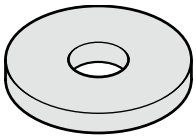

2441.16. F80

Thrust washer

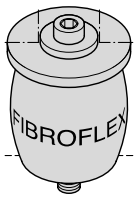

244.14.0. F82

Spring unit for elastomer spring

2441.14.1. F82

Spring unit for elastomer spring

FIBRO

Contents

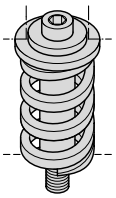

244.15.0. F83

Spring unit for helical spring

2441.15.1. F83

Spring unit for helical spring

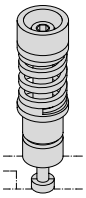

244.20./25./32./40. F84-85

Spring- and spacer unit

244.20./25./32./40.3. F86

Spring- and spacer unit, low installation space

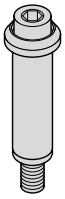

244.16. F87

Spring and spacer unit

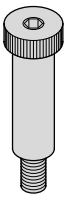

244.17. F88

Shoulder screw

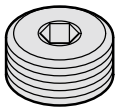

241.00.1. F89

Compression spring set screw

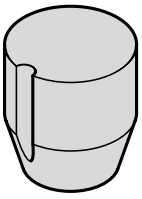

2471.6. F90

Compression Pad

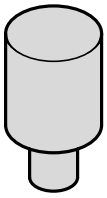

247.6. F90

Shedder insert

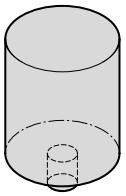

2531.7. F91

Setting-up bumper, round

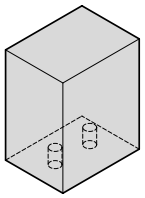

252.7. F92

Setting-up bumper, square

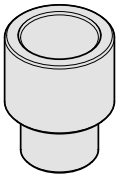

2533.10. F93

Spacer for die release

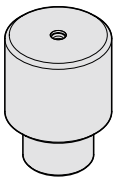

2533.20. F94

Spacer with spring for die release

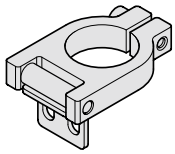

2533.00.01. F95

Hinge for spacer

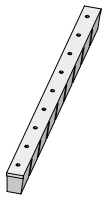

2532.2. F96

Strippers for blanking dies

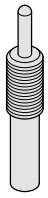

2470.10. .1 F98

Spring plunger, standard spring force, VDI 3004, Colour marking: yellow

Contents

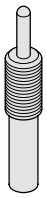

2470.10. .016. .1 F99

Spring plunger, standard spring force, VDI 3004, Colour marking: yellow

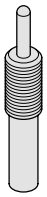

2470.10. .3 F100

Spring plunger, medium spring force, VDI 3004, Colour marking: white

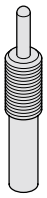

2470.10. .016. .3 F101

Spring plunger, medium spring force, VDI 3004, Colour marking: white

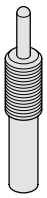

2470.10. .2 F102

Spring plunger, increased spring force, VDI 3004, Colour marking: red

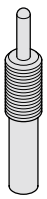

2470.10. .016. .2 F103

Spring plunger, increased spring force, VDI 3004, Colour marking: red

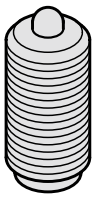

2471.01. F104

Spring plunger, with spring loaded ball, with slot, standard spring force

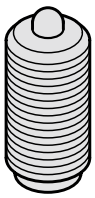

2471.31. F104

Spring plunger, with spring loaded ball, with slot, standard spring force

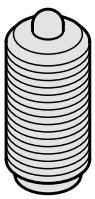

2471.02. F105

Spring plunger, with spring loaded ball, with slot, increased spring force

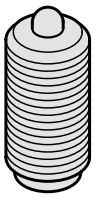

2471.32. F105

Spring plunger, with spring loaded ball, with slot, increased spring force

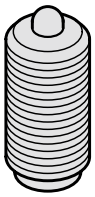

2471.03. F106

Spring plunger, with spring loaded ball, with hexagon socket, standard spring force

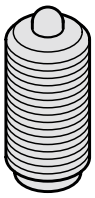

2471.33. F106

Spring plunger, with spring loaded ball, with hexagon socket, standard spring force

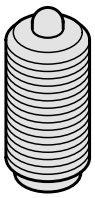

2471.04. F107

Spring plunger, with spring loaded ball, with hexagon socket, increased spring force

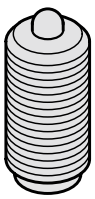

2471.34. F107

Spring plunger, with spring loaded ball, with hexagon socket, increased spring force

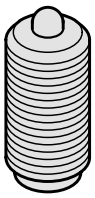

2471.05. F108

Spring plunger, with spring loaded ball, with slot, standard spring force

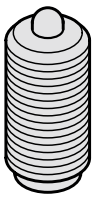

2471.35. F108

Spring plunger, with spring loaded ball, with slot, standard spring force

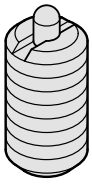

2472.01. F109

Spring plunger, with spring loaded pin, with slot, standard spring force

FIBRO

Contents

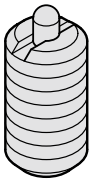

2472.31. F109

Spring plunger, with spring loaded pin, with slot, standard spring force

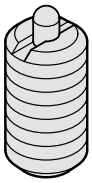

2472.21. F110

Spring plunger, with spring loaded pin, with slot, standard spring force

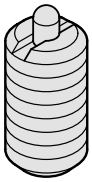

2472.22. F110

Spring plunger, with spring loaded pin, with slot, standard spring force

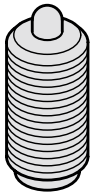

2472.03. F111

Spring plunger, with spring loaded pin, with hexagon socket, standard spring force

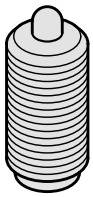

2472.33. F111

Spring plunger, with spring loaded pin, with hexagon socket, standard spring force

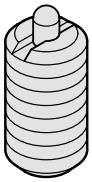

2472.07. F112

Spring plunger, with spring loaded pin and seal, with hexagon socket, standard spring force

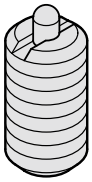

2472.37. F112

Spring plunger, with spring loaded pin and seal, with hexagon socket, standard spring force

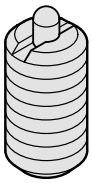

2472.02. F113

Spring plunger, with spring loaded pin, with slot, increased spring force

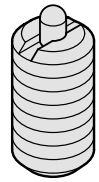

2472.08. F113

Spring plunger, with spring loaded pin and seal, with hexagon socket, increased spring force

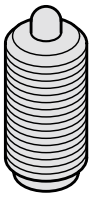

2472.04. F114

Spring plunger, with spring loaded pin, with hexagon socket, increased spring force

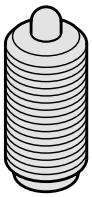

2472.34. F114

Spring plunger, with spring loaded pin, with hexagon socket, increased spring force

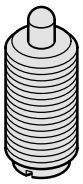

2472.05. F115

Spring plunger, with spring loaded pin, with slot, standard spring force

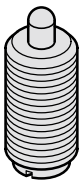

2472.35. F115

Spring plunger, with spring loaded pin, with slot, standard spring force



2472.06. F116

Spring plunger, with spring loaded pin, with slot, increased spring force

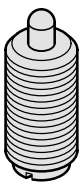

2472.36. F116

Spring plunger, with spring loaded pin, with slot, increased spring force

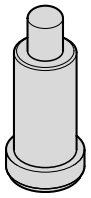

2473.01. F117

Spring plunger, with spring loaded pin, straight version, with collar

Contents

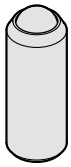

2473.02. F117

Spring plunger, with spring loaded ball, straight version



2475.01. F118

Spring plunger, with spring loaded ball, straight version, with collar



2475.02. F118

Spring plunger, with spring loaded ball, straight version, with collar



2475.03. F119

Spring plunger, with spring loaded ball, straight version, with collar



2475.04. F119

Spring plunger, with spring loaded ball, straight version, with collar



2470.10.11 F120

Insertion tool

2470.12.010.017 F120

Insertion tool

2472.11. F120

Thrust pad driver

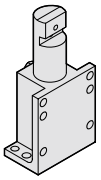

2477. .1.01 F122

Stripping unit, wall and bottom mounting

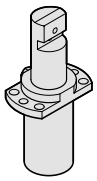

2477. .1.02 F123

Stripping unit, flanged mounting

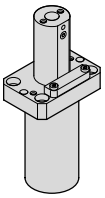

2478.10. F124

Stock lifter

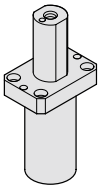

2478.30. .1 F125

Stock lifter

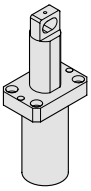

2478.30. .2 F126

Stock lifter with attachment lug

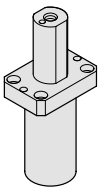

2478.30. .3 F127

Stripper

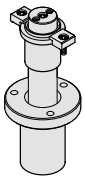

2478.20.20. F129

Lifting unit (not damped/damped) to Mercedes-Benz



2478.20.20.1. F130

Guide pillar for lifting unit to Mercedes-Benz

FIBRO

Contents

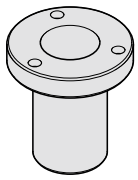

2478.20.20.2. F131

Sleeve for lifting unit to Mercedes-Benz

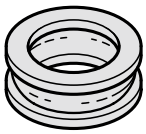

2478.20.20.3 F132

Damper for lifting units to Mercedes-Benz

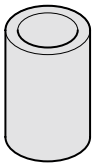

2478.20.20.4 F133

Spacer sleeve for lifting units to Mercedes-Benz

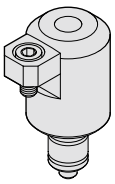

2478.20.15.10 F134

Lifter, round with pilot pin hole to BMW standard

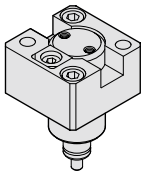

2478.20.15.20. F135

Lifter unit with installation block to BMW standard

2478.20.15.23. F136

Lifter rail for lifter units to BMW standard

2478.20.15.24. F136

Holding sleeve for lifter units to BMW standard

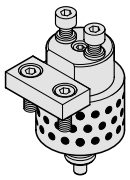

2478.20.15.30. F137

Universal lifter unit according to BMW standard



2478. F138

Spring ram with gas spring

2478.20. .1 F139

Spring ram with gas spring to VW standard



2052.71. F140

Guide bush
for spring ram 2478.20. .1

Gas springs - Description F142-145

Gas springs - Mounting Directions F146-147

Gas springs from FIBRO - The Safer Choice F148

Gas springs - General overview F149-151



2479.030. F154

Gas spring (Spring plunger), with hexagon socket, VDI 3004

Contents

2479.031. F155

Gas spring (Spring plunger), with hexagon socket, VDI 3004

2479.032. F156

Gas spring (Spring plunger), with hexagon socket, VDI 3004



2479.034. F157

Gas spring (Spring plunger), to WDX

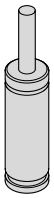

2482.72. F160-161

Gas spring, small dimension and low force

2482.73. .1 F162-163

Gas spring, small dimension and low force

2482.74. .2 F164-165

Gas spring, small dimension and low force

2480.21. F166-167

Gas spring, small dimension and low force

2480.22. .1 F168-169

Gas spring, small dimension and low force

2480.23. F170-171

Gas spring, small dimension and low force

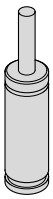

2480.13.00250. F174-175

Gas spring, Standard

2480.13.00500. F176-177

Gas spring, Standard

2480.13.00750. F178-179

Gas Spring, Standard

2480.12.01500. F180-181

Gas spring, Standard

2480.13.03000. F182-183

Gas spring, Standard

2480.13.05000. F184-185

Gas spring, Standard

2480.13.07500. F186-187

Gas spring, Standard

FIBRO

Contents

2480.12.10000. F188-189
Gas spring, Standard

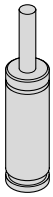

2488.13.01000. F192-193
Gas spring HEAVY DUTY

2488.13.02400. F194-195
Gas spring HEAVY DUTY

2488.13.04200. F196-197
Gas Spring HEAVY DUTY

2488.13.06600. F198-199
Gas spring HEAVY DUTY

2488.13.09500. F200-201
Gas spring HEAVY DUTY

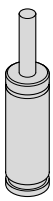

2496.12.00270. F204-205
Gas spring with through bore passage

2496.12.00490. F206-207
Gas spring with through bore passage

2496.12.01060. F208-209
Gas spring with through bore passage

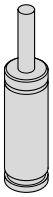

2487.12.00170. F212-213
Gas spring POWERLINE

2487.12.00320. F214-215
Gas spring POWERLINE

2487.12.00350. F216-217
Gas spring POWERLINE

2487.12.00500. F218-219
Gas spring POWERLINE

2487.12.00750. .1 F220-221
Gas spring POWERLINE

2487.12.01000. .1 F222-223
Gas spring POWERLINE

2487.12.01500. F224-225
Gas spring POWERLINE

Contents

2487.12.02400. F226-227
Gas spring POWERLINE

2487.12.04200. F228-229
Gas spring POWERLINE

2487.12.06600. F230-231
Gas spring POWERLINE

2487.12.09500. F232-233
Gas spring POWERLINE

2487.12.20000. F234-235
Gas spring POWERLINE

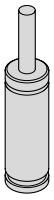

2490.14.00420. F238-239
Compact gas spring

2490.14.00750. F240-241
Compact gas spring

2490.14.01000. F242-243
Compact gas spring

2490.14.01800. F244-245
Compact gas spring

2490.14.03000. F246-247
Compact gas spring

2490.14.04700. F248-249
Compact gas spring

2490.14.07500. F250-251
Compact gas spring

2490.14.11800. F252-253
Compact gas spring

2490.14.18300. F254-255
Compact gas spring

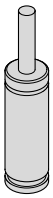

2485.12.00500. F260-261
Gas spring, with low build height

2485.12.00750. F262-263
Gas spring, with low build height

FIBRO

Contents

2485.12.01500. F264-265
Gas spring, with low build height

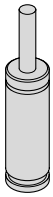

2486.12.00750. F270-271
Gas spring SPEED CONTROL, cushioned

2486.12.01500. F272-273
Gas spring SPEED CONTROL, cushioned

2486.12.03000. F274-275
Gas spring SPEED CONTROL, cushioned

2486.12.05000. F276-277
Gas spring SPEED CONTROL, cushioned

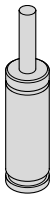

2486.22.03000. F282-283
Gas spring DS

2486.22.05000. F284-285
Gas spring DS

2486.22.07500. F286-287
Gas spring DS

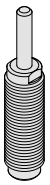

2480.32. F292-293
Gas spring with external thread

2480.32.00250. F294-295
Gas spring with external thread

2480.82.00250. F296-297
Gas spring with external thread

2487.82.01000. F299
Gas spring with male fixing thread, POWERLINE

2480.33. F300
Gas spring with hexagonal flange

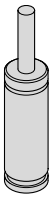

2484.13.00750. F308-309
LCF Gas Spring, damped

2484.12.01500. F310-311
LCF Gas Spring, damped

2484.13.03000. F312-313
LCF Gas Spring, damped

Contents

2484.13.05000. F314-315
LCF Gas Spring, damped

2484.13.07500. F316-317
LCF Gas Spring, damped

F318
Controllable gas springs

F319
Air springs to VW standard

F320
Manifoldsystems

F321
Gas springs - Accessories

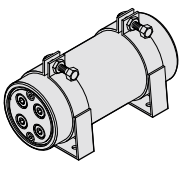

2480.00.70. F322-324
Pressure reservoir

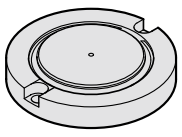

2480.015. F325
Pressure plate, shock absorbing

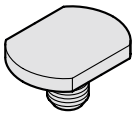

2480.004. F326
Thrust Pad

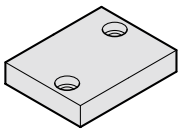

2480.009. F326
Thrust plate

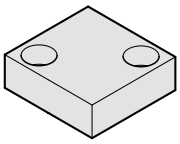

2480.018. F326
Thrust plate

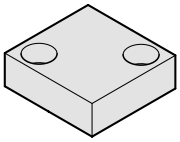

2480.019. F327
Thrust plate

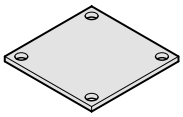

2480.019.45. F327
Thrust plate to Renault standard

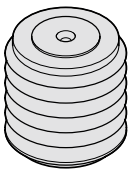

2480.080. F328-329
Concertina shroud for gas springs

F330
Gas spring connection systems

F331-335
Mounting arrangement for gas springs in the Minimess system

FIBRO

Contents

Instruction for hose assembly in the Minimess system F331

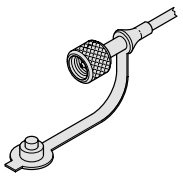

2480.00.23. Minimess – Compound Threaded Joints F336

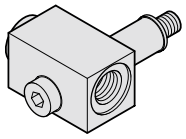

2480.00.24. Minimess - Compound Threaded Joints F337-340

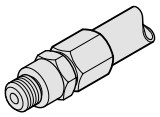

2480.00.10. Compression Fitting – Compound Threaded Joints F341-342

Assembly Arrangenment of Gas Springs in Servial Connection Compression Fitting F343

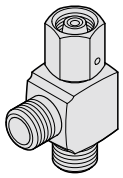

2480.00.26. 24°-cone-threaded Joint F344-346

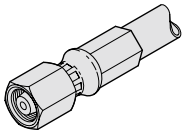

2480.00.25. Connecting hose with 24° cone F345

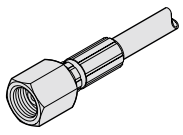

2480.00.27.01. Connector system 24° conus micro F347

2480.00.27. Connector system 24° conus micro F348

2480.00.28. Connector system 24° conus micro F349-351

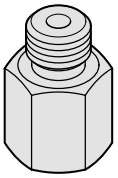

2480.00.22. Connector system micro F350

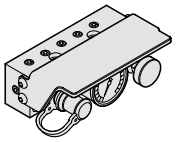

2480.00.34. Micro control fitting F352

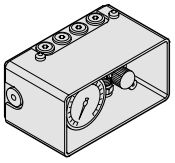

2480.00.30. Control fitting F353

2480.00.31. Control fitting for gas springs F353

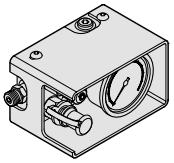

2480.00.30.13 Control fitting F354

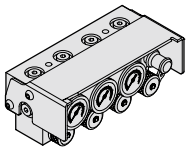

2480.00.39.04. Multiple control fitting F355

Contents

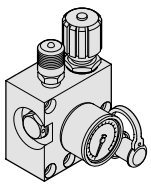

2480.00.31.11 F356

Control fitting

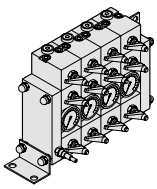

2480.00.39.01. F357

Stacked control fittting for individual control

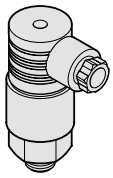

2480.00.45. F358

Diaphragm pressure switch

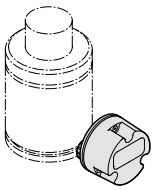

2480.00.90. F360-362

Wireless Pressure Monitoring - wireless monitoring of gas springs

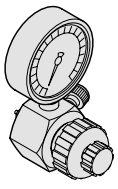

2480.00.32.21 F363

Filling and control fitting

2480.00.31.02 F363

Filling hose

2480.00.32.07 F363

Cylinder pressure regulator

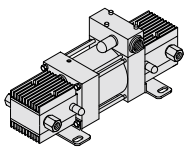

2480.00.32.71. F364-365

Compact Nitrogen Booster

2480.00.35. F366

Dynamometer for gas springs

2480.00.35.04 F367

Dynamometer for gas springs

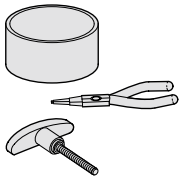

2480.00.50.11 F368

Toolkit for assembling gas springs

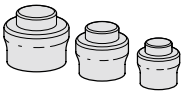

2480.00.50.04 F369

Assembling cone

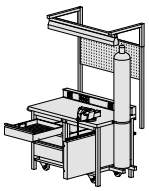

2480.00.50.20. F370

Service station, mobile, for gas springs

2480.00.54.10 F371

Hose press, pneumatic

2480.00.54.03 F371

Hose shears

Gas springs - Application examples F373-380

General overview of
Gas springs - High Performance Compression Spring - FIBROFLEX® springs

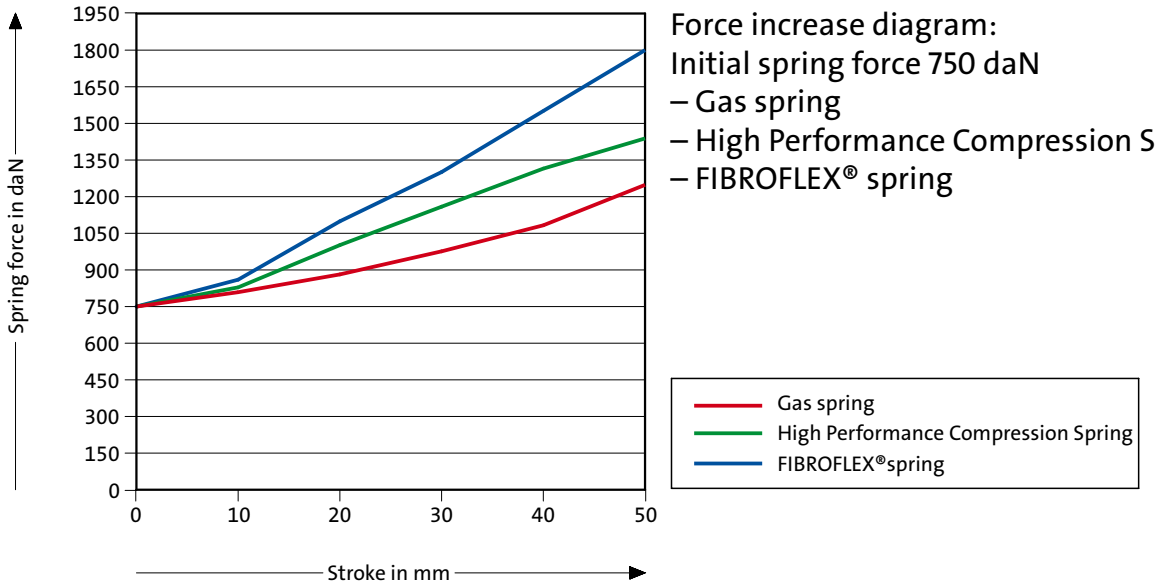

Force increase diagram:
Initial spring force 750 daN
– Gas spring
– High Performance Compression Spring
– FIBROFLEX® spring

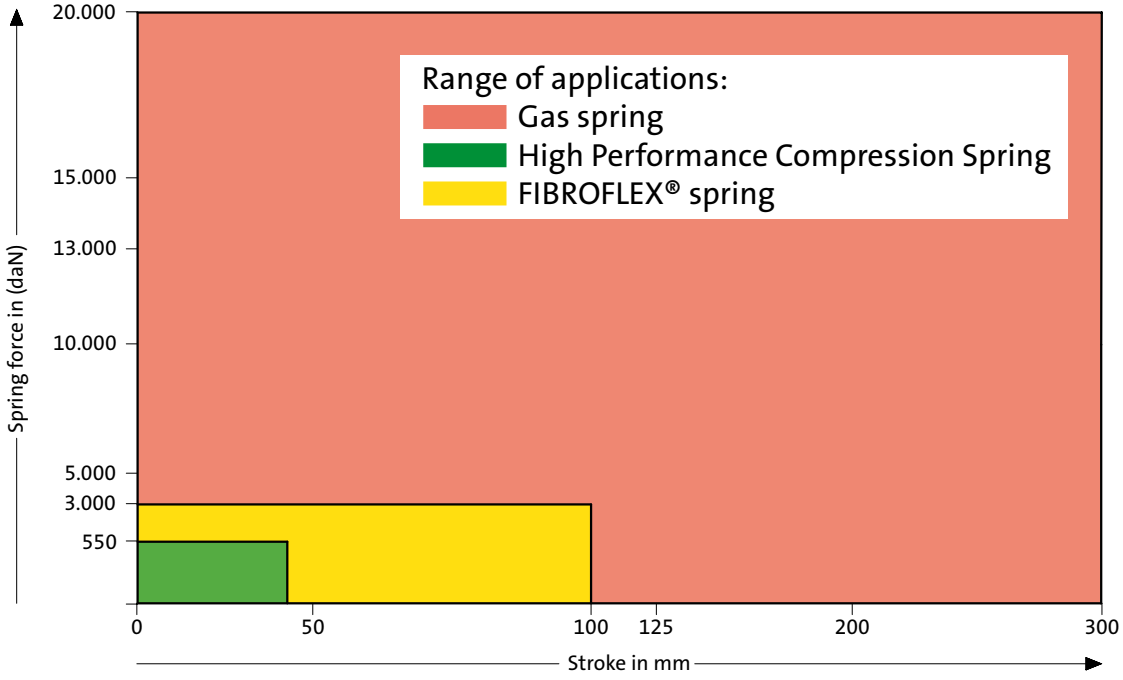







Compression Springs DIN ISO 10243

Service Data for Limited-/ Extended Spring Life

The achievable service life of helical compression springs depends to a large extent on the composition of the spring wire, the operating conditions, and on design parameters.

In all applications with oscillating spring displacement, careful selection of both preload values and compressive displacement are prerequisites for extended spring life, as confirmed by the permissible stress values in the loading data tables and the stress/spring life diagram.

Shear stress maxima and spring oscillation stress differentials are a direct function of the quality of the spring wire.
FIBRO High Performance Compression Springs are made exclusively from special 50 Cr V4. The superlative characteristics of this material are further enhanced by heat treatment under optimal conditions, followed by a ball shot peening process.

For extended spring life under oscillating load changes, the maximal shear stress tzul. is 800 N / mm2, of which some 400 N/mm2 = (τ_h) may be taken up by the stress differential between spring oscillations.

Higher stress levels are permissible only under the proviso of limited life expectancy, or in cases of static and quasi-static load conditions.

Springs subjected to dynamic load conditions also suffer impairment to their life expectancy through influences such as extreme operating temperatures, transversal stress components, shock loads, and resonant vibration frequencies. In all these instances, a lowering of the stress levels assists towards better spring life.

Working temperature

The spring material has a working temperature of up to 250 °C. This rating is an approximation since the actual approved working temperature will also depend on factors such as load. It is worth noting that above 100 °C the modulus of elasticity decreases and with a reduction in tension setting starts to occur.

Extended Spring Life: Spring Displacement Values

The largest permissible displacement is indicated by S6 – offering about 62 % of the “total” displacement of the wire-to-wire compacted spring (= Sn). This displacement will induce a shear stress of tzul. of 800 N/mm2. The associated stress differential- during oscillations shoult not exceed 400 N/mm2 (= τ_h).

Calculation of Spring Forces

Simple multiplication of the spring coefficient R with the applicable displacement S (mm) yields the spring force value (N).

Spring Force versus Spring Displacement

The relevant tables show the force values for selected displacements od 30, 40, 45, 55, 62, 80 and 100 % compression, designated by S1...S7.
Intermediate force values can be extra-polated from the Stress/Spring Life Diagram.

Cyclic stress maxima/minima as applicable to extended/limited life of FIBRO High-Performance Compression Springs

241.

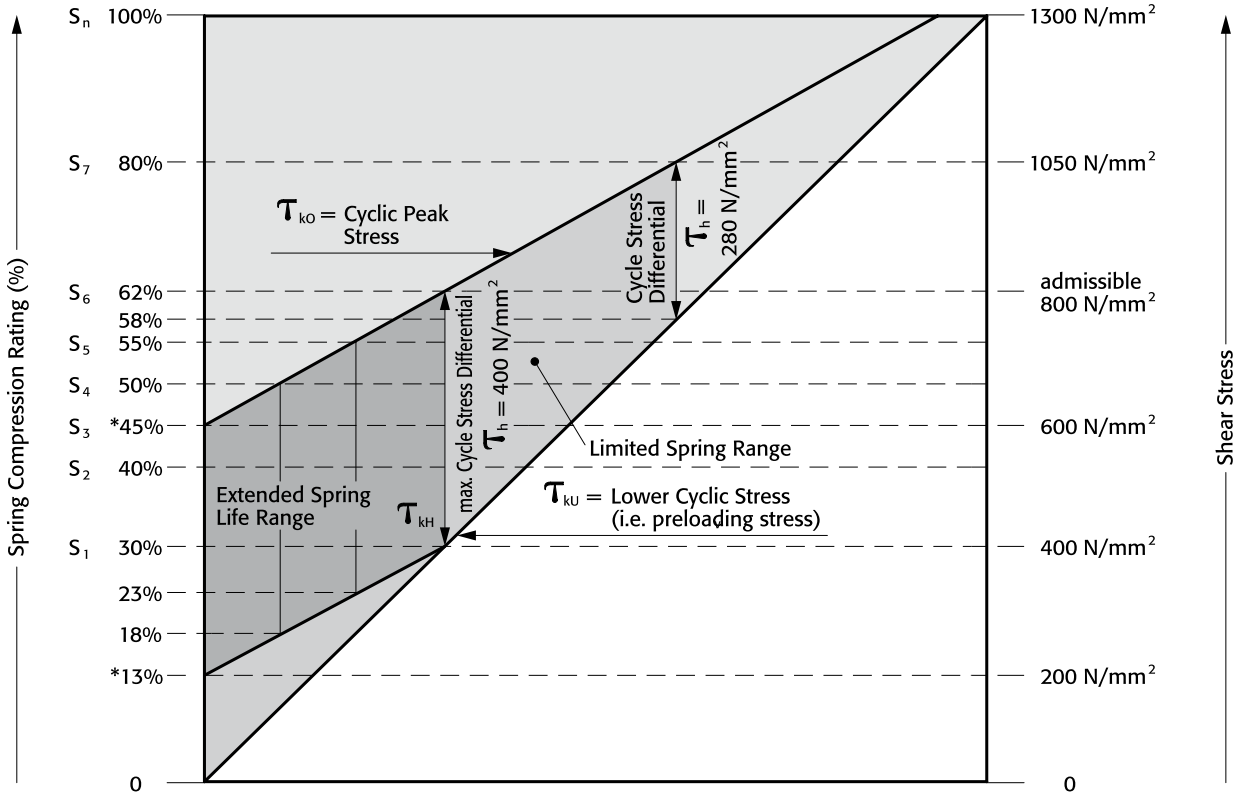

* For application within Extended Spring Life:
up to a compression rating of 45%, a preloading compression of 13% applies.
e. g.: up to a compression rating of 55% a preloading compression of 23% is required.

D_h	=	diameter of guide sleeve
D_d	=	diameter of guide pin
L_0	=	free length of spring
L_1...L_n	=	length of loaded spring (mm), as related to spring
L_{BL}	=	length of compacted spring (i.e. wire-to-wire)
F_1...F_n	=	forces (N) as related to lenght of spring L1...Ln
S_{v1}...S_{v7}	=	recommended preload compression, as related to compress. S1...S7
S_1...S_n	=	compression, as related to spring forces F1...Fn
R	=	spring rate (N/mm)
S_{A1}...S_{A7}	=	working stroke (mm)

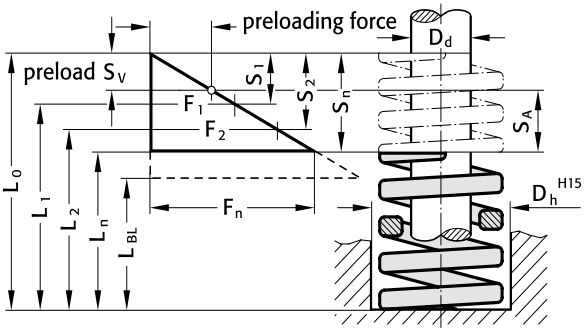

Working strokes SA1...SA7 = compress. (S1...S7) – minus preloading compression (Sv1...Sv7)

Notice: 80% compression must not be exceeded!

FIBRO

High performance compression spring, XSF, Colour "Violet"



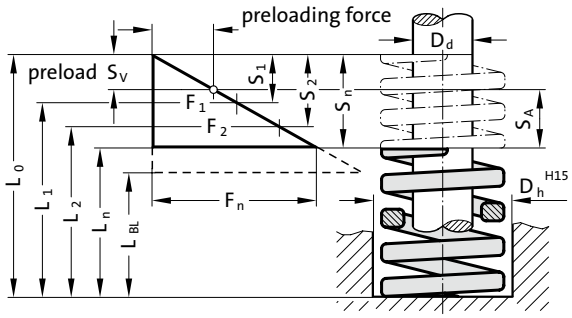

D_h = dia. of guide sleeve
D_d = diameter of guide pin
L_0 = free length of spring
$L_1...L_n$ = length of loaded spring (mm) as related to spring forces $F_1...F_n$
L_{BL} = length of compacted spring (i.e. wire-to-wire)
$F_1...F_n$ = forces (N) as related to length of spring $L_1...L_n$
$S_{V1}...S_{V7}$ = recommend. preload. compression, as relat. to compress. $S_1...S_7$
$S_1...S_n$ = compr. as related to spring forces $F_1...F_n$
R = spring rate (N/mm)
$S_{A1}...S_{A7}$ = working stroke (mm)

241.13. High performance compression spring, XSF, Colour "Violet"

					45%				62%				80%				100%		
Order No	D_h	D_d	L_0	R	S_1	S_{V1}	S_{A1}	F_1	S_2	S_{V2}	S_{A2}	F_2	S_3	S_{V3}	S_{A3}	F_3	S_n	F_n
241.13.20.025	20	10	25	32.1	6.3	1.8	4.5	202	8.7	4.2	4.5	279	11.2	8.1	3.1	360	14	449
241.13.20.032	20	10	32	24.7	8.1	2.3	5.8	200	11.2	5.4	5.8	276	14.4	10.4	4	356	18	445
241.13.20.038	20	10	38	20.7	9.9	2.9	7	205	13.6	6.6	7	282	17.6	12.8	4.8	364	22	455
241.13.20.044	20	10	44	17.8	11.7	3.4	8.3	208	16.1	7.8	8.3	287	20.8	15.1	5.7	370	26	463
241.13.20.051	20	10	51	15.3	13.5	3.9	9.6	207	18.6	9	9.6	285	24	17.4	6.6	367	30	459
241.13.20.064	20	10	64	12.1	17.1	4.9	12.2	207	23.6	11.4	12.2	285	30.4	22	8.4	368	38	460
241.13.20.076	20	10	76	10.2	20.2	5.9	14.4	207	27.9	13.5	14.4	285	36	26.1	9.9	367	45	459
241.13.20.089	20	10	89	8.6	23.9	6.9	17	205	32.9	15.9	17	283	42.4	30.7	11.7	365	53	456
241.13.20.102	20	10	102	7.5	27.9	8.1	19.8	209	38.4	18.6	19.8	288	49.6	36	13.6	372	62	465
241.13.20.115	20	10	115	6.7	31.5	9.1	22.4	211	43.4	21	22.4	291	56	40.6	15.4	375	70	469
241.13.20.127	20	10	127	6.1	34.6	10	24.6	211	47.7	23.1	24.6	291	61.6	44.7	16.9	376	77	470
241.13.20.139	20	10	139	5.5	38.2	11	27.2	210	52.7	25.5	27.2	290	68	49.3	18.7	374	85	468
241.13.20.152	20	10	152	5.1	41.9	12.1	29.8	213	57.7	27.9	29.8	294	74.4	53.9	20.5	379	93	474
241.13.20.305	20	10	305	2.5	84.6	24.4	60.2	212	116.6	56.4	60.2	291	150.4	109	41.4	376	188	470
241.13.25.025	25	12.5	25	52.7	6.3	1.8	4.5	332	8.7	4.2	4.5	457	11.2	8.1	3.1	590	14	738
241.13.25.032	25	12.5	32	40	8.1	2.3	5.8	324	11.2	5.4	5.8	446	14.4	10.4	4	576	18	720
241.13.25.038	25	12.5	38	33.3	9.9	2.9	7	330	13.6	6.6	7	454	17.6	12.8	4.8	586	22	733
241.13.25.044	25	12.5	44	28.6	11.2	3.2	8	322	15.5	7.5	8	443	20	14.5	5.5	572	25	715
241.13.25.051	25	12.5	51	24.7	13.5	3.9	9.6	333	18.6	9	9.6	459	24	17.4	6.6	593	30	741
241.13.25.064	25	12.5	64	19.4	17.1	4.9	12.2	332	23.6	11.4	12.2	457	30.4	22	8.4	590	38	737
241.13.25.076	25	12.5	76	16.3	20.2	5.9	14.4	330	27.9	13.5	14.4	455	36	26.1	9.9	587	45	734
241.13.25.089	25	12.5	89	15.9	23.9	6.9	17	379	32.9	15.9	17	522	42.4	30.7	11.7	674	53	843
241.13.25.102	25	12.5	102	12.1	27.4	7.9	19.5	332	37.8	18.3	19.5	458	48.8	35.4	13.4	590	61	738
241.13.25.115	25	12.5	115	10.8	31.5	9.1	22.4	340	43.4	21	22.4	469	56	40.6	15.4	605	70	756
241.13.25.127	25	12.5	127	9.8	34.6	10	24.6	340	47.7	23.1	24.6	468	61.6	44.7	16.9	604	77	755
241.13.25.139	25	12.5	139	8.9	38.2	11	27.2	340	52.7	25.5	27.2	469	68	49.3	18.7	605	85	756
241.13.25.152	25	12.5	152	8.1	41.9	12.1	29.8	339	57.7	27.9	29.8	467	74.4	53.9	20.5	603	93	753
241.13.25.178	25	12.5	178	6.9	49.1	14.2	34.9	338	67.6	32.7	34.9	466	87.2	63.2	24	602	109	752
241.13.25.203	25	12.5	203	6.1	55.8	16.1	39.7	340	76.9	37.2	39.7	469	99.2	71.9	27.3	605	124	756
241.13.25.305	25	12.5	305	4	84.6	24.4	60.2	338	116.6	56.4	60.2	466	150.4	109	41.4	602	188	752
241.13.32.038	32	16	38	43.8	9.9	2.9	7	434	13.6	6.6	7	597	17.6	12.8	4.8	771	22	964
241.13.32.044	32	16	44	37.5	11.7	3.4	8.3	439	16.1	7.8	8.3	604	20.8	15.1	5.7	780	26	975
241.13.32.051	32	16	51	32.3	13.9	4	9.9	451	19.2	9.3	9.9	621	24.8	18	6.8	801	31	1001
241.13.32.064	32	16	64	25.4	17.6	5.1	12.5	446	24.2	11.7	12.5	614	31.2	22.6	8.6	792	39	991
241.13.32.076	32	16	76	21.3	21.1	6.1	15	450	29.1	14.1	15	621	37.6	27.3	10.3	801	47	1001
241.13.32.089	32	16	89	18.1	25.2	7.3	17.9	456	34.7	16.8	17.9	628	44.8	32.5	12.3	811	56	1014
241.13.32.102	32	16	102	15.8	28.8	8.3	20.5	455	39.7	19.2	20.5	627	51.2	37.1	14.1	809	64	1011
241.13.32.115	32	16	115	13.9	32.9	9.5	23.4	457	45.3	21.9	23.4	629	58.4	42.3	16.1	812	73	1015
241.13.32.127	32	16	127	12.6	36.5	10.5	25.9	459	50.2	24.3	25.9	633	64.8	47	17.8	816	81	1021
241.13.32.139	32	16	139	11.4	40	11.6	28.5	457	55.2	26.7	28.5	629	71.2	51.6	19.6	812	89	1015
241.13.32.152	32	16	152	10.5	43.6	12.6	31	458	60.1	29.1	31	631	77.6	56.3	21.3	815	97	1018
241.13.32.178	32	16	178	8.9	51.3	14.8	36.5	457	70.7	34.2	36.5	629	91.2	66.1	25.1	812	114	1015
241.13.32.203	32	16	203	7.8	59	17	41.9	460	81.2	39.3	41.9	634	104.8	76	28.8	817	131	1022
241.13.32.254	32	16	254	6.2	73.3	21.2	52.2	455	101.1	48.9	52.2	627	130.4	94.5	35.9	808	163	1011
241.13.32.305	32	16	305	5.2	88.7	25.6	63	461	122.1	59.1	63	635	157.6	114.3	43.3	820	197	1024

High performance compression spring, XSF, Colour "Violet"

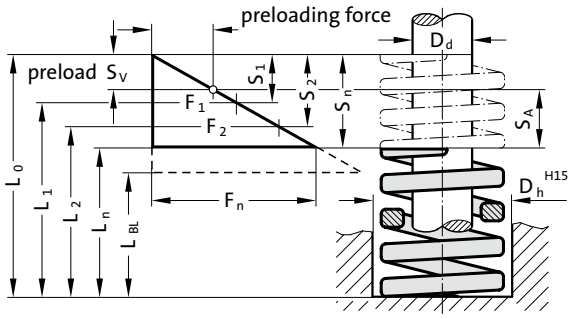

D_h = dia. of guide sleeve
D_d = diameter of guide pin
L_0 = free length of spring
$L_1...L_n$ = length of loaded spring (mm) as related to spring forces $F_1...F_n$
L_{BL} = length of compacted spring (i.e. wire-to-wire)
$F_1...F_n$ = forces (N) as related to length of spring $L_1...L_n$
$S_{V1}...S_{V7}$ = recommend. preload. compression, as relat. to compress. $S_1...S_7$
$S_1...S_n$ = compr. as related to spring forces $F_1...F_n$
R = spring rate (N/mm)
$S_{A1}...S_{A7}$ = working stroke (mm)



241.13. High performance compression spring, XSF, Colour "Violet"

					45%				62%				80%				100%		
Order No	D_h	D_d	L_0	R	S_1	S_{V1}	S_{A1}	F_1	S_2	S_{V2}	S_{A2}	F_2	S_3	S_{V3}	S_{A3}	F_3	S_n	F_n
241.13.40.051	40	20	51	50.8	11.7	3.4	8.3	594	16.1	7.8	8.3	819	20.8	15.1	5.7	1057	26	1321
241.13.40.064	40	20	64	39.7	15.3	4.4	10.9	607	21.1	10.2	10.9	837	27.2	19.7	7.5	1080	34	1350
241.13.40.076	40	20	76	33.1	18	5.2	12.8	596	24.8	12	12.8	821	32	23.2	8.8	1059	40	1324
241.13.40.089	40	20	89	28.1	21.6	6.2	15.4	607	29.8	14.4	15.4	836	38.4	27.8	10.6	1079	48	1349
241.13.40.102	40	20	102	24.5	24.8	7.2	17.6	606	34.1	16.5	17.6	835	44	31.9	12.1	1078	55	1348
241.13.40.115	40	20	115	21.6	28.4	8.2	20.2	612	39.1	18.9	20.2	844	50.4	36.5	13.9	1089	63	1361
241.13.40.127	40	20	127	19.5	31.5	9.1	22.4	614	43.4	21	22.4	846	56	40.6	15.4	1092	70	1365
241.13.40.139	40	20	139	17.8	34.2	9.9	24.3	609	47.1	22.8	24.3	839	60.8	44.1	16.7	1082	76	1353
241.13.40.152	40	20	152	16.3	37.8	10.9	26.9	616	52.1	25.2	26.9	849	67.2	48.7	18.5	1095	84	1369
241.13.40.178	40	20	178	13.8	44.5	12.9	31.7	615	61.4	29.7	31.7	847	79.2	57.4	21.8	1093	99	1366
241.13.40.203	40	20	203	12.1	50.8	14.7	36.2	615	70.1	33.9	36.2	848	90.4	65.5	24.9	1094	113	1367
241.13.40.254	40	20	254	9.7	63.9	18.5	45.4	620	88	42.6	45.4	854	113.6	82.4	31.2	1102	142	1377
241.13.40.305	40	20	305	8	77	22.2	54.7	616	106	51.3	54.7	848	136.8	99.2	37.6	1094	171	1368
241.13.50.064	50	25	64	80.2	16.6	4.8	11.8	1335	22.9	11.1	11.8	1840	29.6	21.5	8.1	2374	37	2967
241.13.50.076	50	25	76	66.9	20.2	5.9	14.4	1355	27.9	13.5	14.4	1867	36	26.1	9.9	2408	45	3011
241.13.50.089	50	25	89	56.6	23.9	6.9	17	1350	32.9	15.9	17	1860	42.4	30.7	11.7	2400	53	3000
241.13.50.102	50	25	102	40.3	27.9	8.1	19.8	1124	38.4	18.6	19.8	1549	49.6	36	13.6	1999	62	2499
241.13.50.115	50	25	115	43.5	31.5	9.1	22.4	1370	43.4	21	22.4	1888	56	40.6	15.4	2436	70	3045
241.13.50.127	50	25	127	39.3	35.1	10.1	25	1379	48.4	23.4	25	1901	62.4	45.2	17.2	2452	78	3065
241.13.50.139	50	25	139	35.8	38.2	11	27.2	1369	52.7	25.5	27.2	1887	68	49.3	18.7	2434	85	3043
241.13.50.152	50	25	152	32.8	42.3	12.2	30.1	1387	58.3	28.2	30.1	1912	75.2	54.5	20.7	2467	94	3083
241.13.50.178	50	25	178	27.8	49.5	14.3	35.2	1376	68.2	33	35.2	1896	88	63.8	24.2	2446	110	3058
241.13.50.203	50	25	203	24.2	56.7	16.4	40.3	1372	78.1	37.8	40.3	1891	100.8	73.1	27.7	2439	126	3049
241.13.50.254	50	25	254	19.2	71.5	20.7	50.9	1374	98.6	47.7	50.9	1893	127.2	92.2	35	2442	159	3053
241.13.50.305	50	25	305	16	86.4	25	61.4	1382	119	57.6	61.4	1905	153.6	111.4	42.2	2458	192	3072

High Performance Compression Springs
DIN ISO 10243



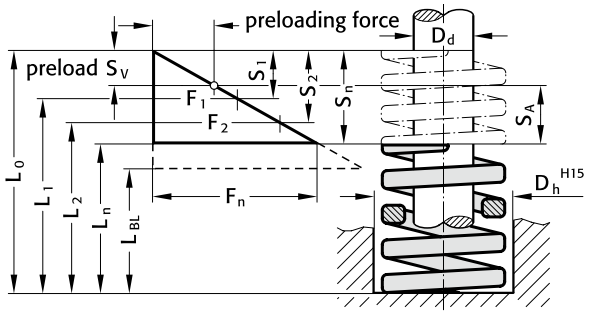

D_h	=	dia. of guide sleeve
D_d	=	diameter of guide pin
L_0	=	free length of spring
$L_1...L_n$	=	length of loaded spring (mm) as related to spring forces $F_1...F_n$
L_{BL}	=	length of compacted-spring (i.e. wire-to-wire)
$F_1...F_n$	=	forces (N) as related to length of spring $L_1...L_n$
$S_{v1}...S_{v7}$	=	recommend. preload. compression, as relat. to compress. $S_1...S_7$
$S_1...S_n$	=	compr. as related to spring forces $F_1...F_n$
R	=	spring rate (N/mm)
$S_{A1}...S_{A7}$	=	working stroke (mm)

241.14. High Performance Compression Springs DIN ISO 10243 Colour: „Green"

					30% stroke				40% stroke				45% stroke				50% stroke			
Order No	D_h	D_d	L_0	R	S_1	S_{v1}	S_{A1}	F_1	S_2	S_{v2}	S_{A2}	F_2	S_3	S_{v3}	S_{A3}	F_3	S_4	S_{v4}	S_{A4}	F_4
241.14.10.025	10,0	5,0	25	10,0	3,9	1,7	2,2	39	5,2	1,7	3,5	52	5,9	1,7	4,2	59	6,5	2,3	4,2	65
241.14.10.032	10,0	5,0	32	8,5	4,8	2,1	2,7	41	6,4	2,1	4,3	54	7,2	2,1	5,1	61	8,0	2,9	5,1	68
241.14.10.038	10,0	5,0	38	6,8	6,0	2,6	3,4	41	8,0	2,6	5,4	54	9,0	2,6	6,4	61	10,0	3,6	6,4	68
241.14.10.044	10,0	5,0	44	6,0	6,9	3,0	3,9	41	9,2	3,0	6,2	55	10,4	3,0	7,4	62	11,5	4,1	7,4	69
241.14.10.051	10,0	5,0	51	5,0	8,1	3,5	4,6	41	10,8	3,5	7,3	54	12,2	3,5	8,7	61	13,5	4,9	8,6	68
241.14.10.064	10,0	5,0	64	4,3	10,2	4,4	5,8	44	13,6	4,4	9,2	58	15,3	4,4	10,9	66	17,0	6,1	10,9	73
241.14.10.076	10,0	5,0	76	3,2	12,0	5,2	6,8	38	16,0	5,2	10,8	51	18,0	5,2	12,8	58	20,0	7,2	12,8	64
241.14.10.305	10,0	5,0	305	1,1	48,9	21,2	27,7	54	65,2	21,2	44,0	72	73,4	21,2	52,2	81	81,5	29,3	52,2	90

					55% stroke				62% stroke				80% stroke				100% stroke		
Order No	D_h	D_d	L_0	R	S_5	S_{v5}	S_{A5}	F_5	S_6	S_{v6}	S_{A6}	F_6	S_7	S_{v7}	S_{A7}	F_7	S_n	L_n	F_n
241.14.10.025	10,0	5,0	25	10,0	7,2	3,0	4,2	72	8,1	3,9	4,2	81	10,4	7,5	2,9	104	13,0	12,0	130,0
241.14.10.032	10,0	5,0	32	8,5	8,8	3,7	5,1	75	9,9	4,8	5,1	84	12,8	9,3	3,5	109	16,0	16,0	136,0
241.14.10.038	10,0	5,0	38	6,8	11,0	4,6	6,4	75	12,4	6,0	6,4	84	16,0	11,6	4,4	109	20,0	18,0	136,0
241.14.10.044	10,0	5,0	44	6,0	12,7	5,3	7,4	76	14,3	6,9	7,4	86	18,4	13,3	5,1	110	23,0	21,0	138,0
241.14.10.051	10,0	5,0	51	5,0	14,9	6,2	8,7	75	16,7	8,1	8,6	84	21,6	15,7	5,9	108	27,0	24,0	135,0
241.14.10.064	10,0	5,0	64	4,3	18,7	7,8	10,9	80	21,1	10,2	10,9	91	27,2	19,7	7,5	117	34,0	30,0	146,2
241.14.10.076	10,0	5,0	76	3,2	22,0	9,2	12,8	70	24,8	12,0	12,8	79	32,0	23,2	8,8	102	40,0	36,0	128,0
241.14.10.305	10,0	5,0	305	1,1	89,7	37,5	52,2	99	101,0	48,9	52,2	111	130,4	94,5	35,9	143	163,0	142,0	179,3

241.15. High Performance Compression Springs DIN ISO 10243 Colour: „Blue"

					30% stroke				40% stroke				45% stroke				50% stroke			
Order No	D_h	D_d	L_0	R	S_1	S_{v1}	S_{A1}	F_1	S_2	S_{v2}	S_{A2}	F_2	S_3	S_{v3}	S_{A3}	F_3	S_4	S_{v4}	S_{A4}	F_4
241.15.10.025	10,0	5,0	25	16,0	3,3	1,4	1,9	53	4,4	1,4	3,0	70	5,0	1,4	3,6	80	5,5	2,0	3,5	88
241.15.10.032	10,0	5,0	32	13,1	3,9	1,7	2,2	51	5,2	1,7	3,5	68	5,9	1,7	4,2	77	6,5	2,3	4,2	85
241.15.10.038	10,0	5,0	38	11,9	4,8	2,1	2,7	57	6,4	2,1	4,3	76	7,2	2,1	5,1	86	8,0	2,9	5,1	95
241.15.10.044	10,0	5,0	44	10,3	5,7	2,5	3,2	59	7,6	2,5	5,1	78	8,6	2,5	6,1	89	9,5	3,4	6,1	98
241.15.10.051	10,0	5,0	51	8,9	6,3	2,7	3,6	56	8,4	2,7	5,7	75	9,5	2,7	6,8	85	10,5	3,8	6,7	93
241.15.10.064	10,0	5,0	64	7,6	8,1	3,5	4,6	62	10,8	3,5	7,3	82	12,2	3,5	8,7	93	13,5	4,9	8,6	103
241.15.10.076	10,0	5,0	76	5,3	9,9	4,3	5,6	52	13,2	4,3	8,9	70	14,9	4,3	10,6	79	16,5	5,9	10,6	87
241.15.10.305	10,0	5,0	305	1,6	40,8	17,7	23,1	65	54,4	17,7	36,7	87	61,2	17,7	43,5	98	68,0	24,5	43,5	109

					55% stroke				62% stroke				80% stroke				100% stroke		
Order No	D_h	D_d	L_0	R	S_5	S_{v5}	S_{A5}	F_5	S_6	S_{v6}	S_{A6}	F_6	S_7	S_{v7}	S_{A7}	F_7	S_n	L_n	F_n
241.15.10.025	10,0	5,0	25	16,0	6,1	2,5	3,6	98	6,8	3,3	3,5	109	8,8	6,4	2,4	141	11,0	14,0	176,0
241.15.10.032	10,0	5,0	32	13,1	7,2	3,0	4,2	94	8,1	3,9	4,2	106	10,4	7,5	2,9	136	13,0	19,0	170,3
241.15.10.038	10,0	5,0	38	11,9	8,8	3,7	5,1	105	9,9	4,8	5,1	118	12,8	9,3	3,5	152	16,0	22,0	190,4
241.15.10.044	10,0	5,0	44	10,3	10,5	4,4	6,1	108	11,8	5,7	6,1	122	15,2	11,0	4,2	157	19,0	25,0	195,7
241.15.10.051	10,0	5,0	51	8,9	11,6	4,8	6,8	103	13,0	6,3	6,7	116	16,8	12,2	4,6	150	21,0	30,0	186,9
241.15.10.064	10,0	5,0	64	7,6	14,9	6,2	8,7	113	16,7	8,1	8,6	127	21,6	15,7	5,9	164	27,0	37,0	205,2
241.15.10.076	10,0	5,0	76	5,3	18,2	7,6	10,6	96	20,5	9,9	10,6	109	26,4	19,1	7,3	140	33,0	43,0	174,9
241.15.10.305	10,0	5,0	305	1,6	74,8	31,3	43,5	120	84,3	40,8	43,5	135	108,8	78,9	29,9	174	136,0	169,0	217,6

subject to alterations

High Performance Compression Springs
DIN ISO 10243

D_h = dia. of guide sleeve

D_d = diameter of guide pin

L_0 = free length of spring

$L_1...L_n$ = length of loaded spring (mm) as related to spring forces $F_1...F_n$

L_{BL} = length of compacted-spring (i.e. wire-to-wire)

$F_1...F_n$ = forces (N) as related to length of spring $L_1...L_n$

$S_{v1}...S_{v7}$ = recommend. preload. compression, as relat. to compress. $S_1...S_7$

$S_1...S_n$ = compr. as related to spring forces $F_1...F_n$

R = spring rate (N/mm)

$S_{A1}...S_{A7}$ = working stroke (mm)

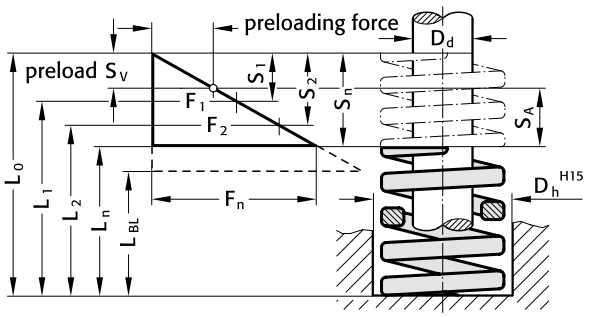



241.16. High Performance Compression Springs DIN ISO 10243 Colour: „Red“

					30% stroke				40% stroke				45% stroke				50% stroke			
Order No	D_h	D_d	L_0	R	S_1	S_{v1}	S_{A1}	F_1	S_2	S_{v2}	S_{A2}	F_2	S_3	S_{v3}	S_{A3}	F_3	S_4	S_{v4}	S_{A4}	F_4
241.16.10.025	10,0	5,0	25	22,6	2,7	1,2	1,5	61	3,6	1,2	2,4	81	4,0	1,2	2,8	90	4,5	1,6	2,9	102
241.16.10.032	10,0	5,0	32	17,7	3,5	1,5	2,0	62	4,7	1,5	3,2	83	5,3	1,5	3,8	94	5,9	2,1	3,8	104
241.16.10.038	10,0	5,0	38	16,7	4,2	1,8	2,4	70	5,6	1,8	3,8	94	6,3	1,8	4,5	105	7,0	2,5	4,5	117
241.16.10.044	10,0	5,0	44	14,7	5,1	2,2	2,9	75	6,8	2,2	4,6	100	7,7	2,2	5,5	113	8,5	3,1	5,4	125
241.16.10.051	10,0	5,0	51	12,8	5,7	2,5	3,2	73	7,6	2,5	5,1	97	8,6	2,5	6,1	110	9,5	3,4	6,1	122
241.16.10.064	10,0	5,0	64	10,8	7,5	3,3	4,2	81	10,0	3,3	6,7	108	11,3	3,3	8,0	122	12,5	4,5	8,0	135
241.16.10.076	10,0	5,0	76	7,8	8,7	3,8	4,9	68	11,6	3,8	7,8	90	13,1	3,8	9,3	102	14,5	5,2	9,3	113
241.16.10.305	10,0	5,0	305	2,0	36,0	15,6	20,4	72	48,0	15,6	32,4	96	54,0	15,6	38,4	108	60,0	21,6	38,4	120

					55% stroke				62% stroke				80% stroke				100% stroke		
Order No	D_h	D_d	L_0	R	S_5	S_{v5}	S_{A5}	F_5	S_6	S_{v6}	S_{A6}	F_6	S_7	S_{v7}	S_{A7}	F_7	S_n	L_n	F_n
241.16.10.025	10,0	5,0	25	22,6	4,9	2,0	2,9	111	5,5	2,7	2,8	124	7,1	5,2	1,9	160	8,9	16,1	201,1
241.16.10.032	10,0	5,0	32	17,7	6,4	2,7	3,7	113	7,3	3,5	3,8	129	9,4	6,8	2,6	166	11,7	20,3	207,1
241.16.10.038	10,0	5,0	38	16,7	7,7	3,2	4,5	129	8,7	4,2	4,5	145	11,2	8,1	3,1	187	14,0	24,0	233,8
241.16.10.044	10,0	5,0	44	14,7	9,4	3,9	5,5	138	10,5	5,1	5,4	154	13,6	9,9	3,7	200	17,0	27,0	249,9
241.16.10.051	10,0	5,0	51	12,8	10,5	4,4	6,1	134	11,8	5,7	6,1	151	15,2	11,0	4,2	195	19,0	32,0	243,2
241.16.10.064	10,0	5,0	64	10,8	13,8	5,8	8,0	149	15,5	7,5	8,0	167	20,0	14,5	5,5	216	25,0	39,0	270,0
241.16.10.076	10,0	5,0	76	7,8	16,0	6,7	9,3	125	18,0	8,7	9,3	140	23,2	16,8	6,4	181	29,0	47,0	226,2
241.16.10.305	10,0	5,0	305	2,0	66,0	27,6	38,4	132	74,4	36,0	38,4	149	96,0	69,6	26,4	192	120,0	185,0	240,0

241.17. High Performance Compression Springs DIN ISO 10243 Colour: „Yellow“

					30% stroke				40% stroke				45% stroke				50% stroke			
Order No	D_h	D_d	L_0	R	S_1	S_{v1}	S_{A1}	F_1	S_2	S_{v2}	S_{A2}	F_2	S_3	S_{v3}	S_{A3}	F_3	S_4	S_{v4}	S_{A4}	F_4
241.17.10.025	10,0	5,0	25	34,3	2,1	0,9	1,2	72	2,8	0,9	1,9	96	3,1	0,9	2,2	106	3,5	1,4	2,1	120
241.17.10.032	10,0	5,0	32	25,5	2,4	1,0	1,4	61	3,2	1,0	2,2	82	3,6	1,0	2,6	92	4,0	1,5	2,5	102
241.17.10.038	10,0	5,0	38	21,6	3,5	1,5	2,0	76	4,6	1,5	3,1	99	5,2	1,5	3,7	112	5,8	2,2	3,6	125
241.17.10.044	10,0	5,0	44	17,9	3,9	1,7	2,2	70	5,2	1,7	3,5	93	5,8	1,7	4,1	104	6,5	2,5	4,0	116
241.17.10.051	10,0	5,0	51	15,1	4,5	1,9	2,6	68	6,0	1,9	4,1	91	6,7	1,9	4,8	101	7,5	2,9	4,6	113
241.17.10.064	10,0	5,0	64	12,3	6,4	2,8	3,6	78	8,5	2,8	5,7	104	9,6	2,8	6,8	118	10,7	4,1	6,6	131
241.17.10.076	10,0	5,0	76	10,2	7,4	3,2	4,2	75	9,8	3,2	6,6	100	11,1	3,2	7,9	113	12,3	4,7	7,6	125
241.17.10.305	10,0	5,0	305	2,5	31,2	13,5	17,7	76	41,6	13,5	28,1	102	46,8	13,5	33,3	115	52,0	20,0	32,0	127

					55% stroke				62% stroke				80% stroke				100% stroke		
Order No	D_h	D_d	L_0	R	S_5	S_{v5}	S_{A5}	F_5	S_6	S_{v6}	S_{A6}	F_6	S_7	S_{v7}	S_{A7}	F_7	S_n	L_n	F_n
241.17.10.025	10,0	5,0	25	34,3	3,8	1,7	2,1	130	4,3	2,2	2,1	148	5,6	4,1	1,5	192	7,0	18,0	240,4
241.17.10.032	10,0	5,0	32	25,5	4,4	1,9	2,5	112	5,0	2,5	2,5	128	6,4	4,7	1,7	163	8,0	24,0	204,1
241.17.10.038	10,0	5,0	38	21,6	6,4	2,8	3,6	138	7,2	3,6	3,6	155	9,3	6,8	2,5	201	11,6	26,4	250,3
241.17.10.044	10,0	5,0	44	17,9	7,2	3,1	4,1	129	8,1	4,1	4,0	145	10,4	7,6	2,8	186	13,0	31,0	232,1
241.17.10.051	10,0	5,0	51	15,1	8,2	3,6	4,6	124	9,3	4,7	4,6	141	12,0	8,8	3,2	181	15,0	36,0	226,7
241.17.10.064	10,0	5,0	64	12,3	11,7	5,2	6,5	143	13,2	6,7	6,5	162	17,0	12,4	4,6	208	21,3	42,7	261,1
241.17.10.076	10,0	5,0	76	10,2	13,5	6,0	7,5	138	15,2	7,7	7,5	155	19,7	14,4	5,3	201	24,6	51,4	250,9
241.17.10.305	10,0	5,0	305	2,5	57,2	25,2	32,0	140	64,5	32,5	32,0	158	83,2	60,8	22,4	204	104,0	201,0	254,8

High Performance Compression Springs
DIN ISO 10243



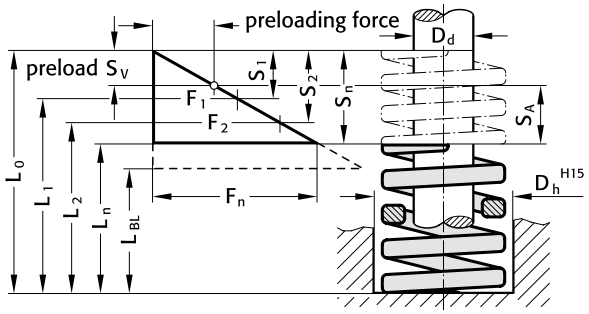

D_h	=	dia. of guide sleeve
D_d	=	diameter of guide pin
L_0	=	free length of spring
$L_1...L_n$	=	length of loaded spring (mm) as related to spring forces $F_1...F_n$
L_{BL}	=	length of compacted-spring (i.e. wire-to-wire)
$F_1...F_n$	=	forces (N) as related to length of spring $L_1...L_n$
$S_{v1}...S_{v7}$	=	recommend. preload. compression, as relat. to compress. $S_1...S_7$
$S_1...S_n$	=	compr. as related to spring forces $F_1...F_n$
R	=	spring rate (N/mm)
$S_{A1}...S_{A7}$	=	working stroke (mm)

241.14. High Performance Compression Springs DIN ISO 10243 Colour: „Green"

					30% stroke				40% stroke				45% stroke				50% stroke			
Order No	D_h	D_d	L_0	R	S_1	S_{v1}	S_{A1}	F_1	S_2	S_{v2}	S_{A2}	F_2	S_3	S_{v3}	S_{A3}	F_3	S_4	S_{v4}	S_{A4}	F_4
241.14.13.025	12,5	6,3	25	18,0	3,9	1,7	2,2	70	5,2	1,7	3,5	94	5,9	1,7	4,2	106	6,5	2,3	4,2	117
241.14.13.032	12,5	6,3	32	16,4	5,1	2,2	2,9	84	6,8	2,2	4,6	112	7,7	2,2	5,5	126	8,5	3,1	5,4	139
241.14.13.038	12,5	6,3	38	13,6	6,0	2,6	3,4	82	8,0	2,6	5,4	109	9,0	2,6	6,4	122	10,0	3,6	6,4	136
241.14.13.044	12,5	6,3	44	12,1	6,9	3,0	3,9	83	9,2	3,0	6,2	111	10,4	3,0	7,4	126	11,5	4,1	7,4	139
241.14.13.051	12,5	6,3	51	11,4	8,1	3,5	4,6	92	10,8	3,5	7,3	123	12,2	3,5	8,7	139	13,5	4,9	8,6	154
241.14.13.064	12,5	6,3	64	9,3	10,5	4,6	5,9	98	14,0	4,6	9,4	130	15,8	4,6	11,2	147	17,5	6,3	11,2	163
241.14.13.076	12,5	6,3	76	7,1	12,3	5,3	7,0	87	16,4	5,3	11,1	116	18,5	5,3	13,2	131	20,5	7,4	13,1	146
241.14.13.089	12,5	6,3	89	5,4	14,7	6,4	8,3	79	19,6	6,4	13,2	106	22,1	6,4	15,7	119	24,5	8,8	15,7	132
241.14.13.305	12,5	6,3	305	1,4	49,8	21,6	28,2	70	66,4	21,6	44,8	93	74,7	21,6	53,1	105	83,0	29,9	53,1	116

					55% stroke				62% stroke				80% stroke				100% stroke		
Order No	D_h	D_d	L_0	R	S_5	S_{v5}	S_{A5}	F_5	S_6	S_{v6}	S_{A6}	F_6	S_7	S_{v7}	S_{A7}	F_7	S_n	L_n	F_n
241.14.13.025	12,5	6,3	25	18,0	7,2	3,0	4,2	130	8,1	3,9	4,2	146	10,4	7,5	2,9	187	13,0	12,0	234,0
241.14.13.032	12,5	6,3	32	16,4	9,4	3,9	5,5	154	10,5	5,1	5,4	172	13,6	9,9	3,7	223	17,0	15,0	278,8
241.14.13.038	12,5	6,3	38	13,6	11,0	4,6	6,4	150	12,4	6,0	6,4	169	16,0	11,6	4,4	218	20,0	18,0	272,0
241.14.13.044	12,5	6,3	44	12,1	12,7	5,3	7,4	154	14,3	6,9	7,4	173	18,4	13,3	5,1	223	23,0	21,0	278,3
241.14.13.051	12,5	6,3	51	11,4	14,9	6,2	8,7	170	16,7	8,1	8,6	190	21,6	15,7	5,9	246	27,0	24,0	307,8
241.14.13.064	12,5	6,3	64	9,3	19,3	8,1	11,2	179	21,7	10,5	11,2	202	28,0	20,3	7,7	260	35,0	29,0	325,5
241.14.13.076	12,5	6,3	76	7,1	22,6	9,4	13,2	160	25,4	12,3	13,1	180	32,8	23,8	9,0	233	41,0	35,0	291,1
241.14.13.089	12,5	6,3	89	5,4	27,0	11,3	15,7	146	30,4	14,7	15,7	164	39,2	28,4	10,8	212	49,0	40,0	264,6
241.14.13.305	12,5	6,3	305	1,4	91,3	38,2	53,1	128	103,0	49,8	53,1	144	132,8	96,3	36,5	186	166,0	139,0	232,4

241.15. High Performance Compression Springs DIN ISO 10243 Colour: „Blue"

					30% stroke				40% stroke				45% stroke				50% stroke			
Order No	D_h	D_d	L_0	R	S_1	S_{v1}	S_{A1}	F_1	S_2	S_{v2}	S_{A2}	F_2	S_3	S_{v3}	S_{A3}	F_3	S_4	S_{v4}	S_{A4}	F_4
241.15.13.025	12,5	6,3	25	30,0	3,3	1,4	1,9	99	4,4	1,4	3,0	132	5,0	1,4	3,6	150	5,5	2,0	3,5	165
241.15.13.032	12,5	6,3	32	24,8	3,9	1,7	2,2	97	5,2	1,7	3,5	129	5,9	1,7	4,2	146	6,5	2,3	4,2	161
241.15.13.038	12,5	6,3	38	21,4	4,8	2,1	2,7	103	6,4	2,1	4,3	137	7,2	2,1	5,1	154	8,0	2,9	5,1	171
241.15.13.044	12,5	6,3	44	18,5	5,7	2,5	3,2	105	7,6	2,5	5,1	141	8,6	2,5	6,1	159	9,5	3,4	6,1	176
241.15.13.051	12,5	6,3	51	15,5	6,6	2,9	3,7	102	8,8	2,9	5,9	136	9,9	2,9	7,0	153	11,0	4,0	7,0	171
241.15.13.064	12,5	6,3	64	12,1	8,4	3,6	4,8	102	11,2	3,6	7,6	136	12,6	3,6	9,0	152	14,0	5,0	9,0	169
241.15.13.076	12,5	6,3	76	10,2	10,2	4,4	5,8	104	13,6	4,4	9,2	139	15,3	4,4	10,9	156	17,0	6,1	10,9	173
241.15.13.089	12,5	6,3	89	8,4	12,3	5,3	7,0	103	16,4	5,3	11,1	138	18,5	5,3	13,2	155	20,5	7,4	13,1	172
241.15.13.305	12,5	6,3	305	2,1	43,2	18,7	24,5	91	57,6	18,7	38,9	121	64,8	18,7	46,1	136	72,0	25,9	46,1	151

					55% stroke				62% stroke				80% stroke				100% stroke		
Order No	D_h	D_d	L_0	R	S_5	S_{v5}	S_{A5}	F_5	S_6	S_{v6}	S_{A6}	F_6	S_7	S_{v7}	S_{A7}	F_7	S_n	L_n	F_n
241.15.13.025	12,5	6,3	25	30,0	6,1	2,5	3,6	183	6,8	3,3	3,5	204	8,8	6,4	2,4	264	11,0	14,0	330,0
241.15.13.032	12,5	6,3	32	24,8	7,2	3,0	4,2	179	8,1	3,9	4,2	201	10,4	7,5	2,9	258	13,0	19,0	322,4
241.15.13.038	12,5	6,3	38	21,4	8,8	3,7	5,1	188	9,9	4,8	5,1	212	12,8	9,3	3,5	274	16,0	22,0	342,4
241.15.13.044	12,5	6,3	44	18,5	10,5	4,4	6,1	194	11,8	5,7	6,1	218	15,2	11,0	4,2	281	19,0	25,0	351,5
241.15.13.051	12,5	6,3	51	15,5	12,1	5,1	7,0	188	13,6	6,6	7,0	211	17,6	12,8	4,8	273	22,0	29,0	341,0
241.15.13.064	12,5	6,3	64	12,1	15,4	6,4	9,0	186	17,4	8,4	9,0	211	22,4	16,2	6,2	271	28,0	36,0	338,8
241.15.13.076	12,5	6,3	76	10,2	18,7	7,8	10,9	191	21,1	10,2	10,9	215	27,2	19,7	7,5	277	34,0	42,0	346,8
241.15.13.089	12,5	6,3	89	8,4	22,6	9,4	13,2	190	25,4	12,3	13,1	213	32,8	23,8	9,0	276	41,0	48,0	344,4
241.15.13.305	12,5	6,3	305	2,1	79,2	33,1	46,1	166	89,3	43,2	46,1	188	115,2	83,5	31,7	242	144,0	161,0	302,4

subject to alterations

High Performance Compression Springs
DIN ISO 10243

D_h = dia. of guide sleeve

D_d = diameter of guide pin

L_0 = free length of spring

$L_1...L_n$ = length of loaded spring (mm) as related to spring forces $F_1...F_n$

L_{BL} = length of compacted-spring (i.e. wire-to-wire)

$F_1...F_n$ = forces (N) as related to length of spring $L_1...L_n$

$S_{v1}...S_{v7}$ = recommend. preload. compression, as relat. to compress. $S_1...S_7$

$S_1...S_n$ = compr. as related to spring forces $F_1...F_n$

R = spring rate (N/mm)

$S_{A1}...S_{A7}$ = working stroke (mm)

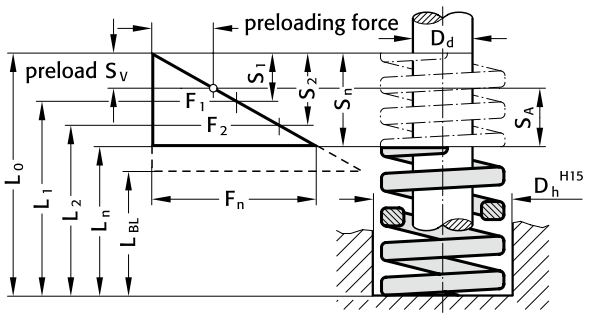



241.16. High Performance Compression Springs DIN ISO 10243 Colour: „Red“

					30% stroke				40% stroke				45% stroke				50% stroke			
Order No	D_h	D_d	L_0	R	S_1	S_{v1}	S_{A1}	F_1	S_2	S_{v2}	S_{A2}	F_2	S_3	S_{v3}	S_{A3}	F_3	S_4	S_{v4}	S_{A4}	F_4
241.16.13.025	12,5	6,3	25	42,2	2,6	1,1	1,5	110	3,5	1,1	2,4	148	3,9	1,1	2,8	165	4,4	1,6	2,8	186
241.16.13.032	12,5	6,3	32	33,4	3,3	1,4	1,9	110	4,4	1,4	3,0	147	5,0	1,4	3,6	167	5,5	2,0	3,5	184
241.16.13.038	12,5	6,3	38	29,4	4,1	1,8	2,3	121	5,4	1,8	3,6	159	6,1	1,8	4,3	179	6,8	2,4	4,4	200
241.16.13.044	12,5	6,3	44	24,5	4,8	2,1	2,7	118	6,4	2,1	4,3	157	7,2	2,1	5,1	176	8,0	2,9	5,1	196
241.16.13.051	12,5	6,3	51	19,6	5,7	2,5	3,2	112	7,6	2,5	5,1	149	8,6	2,5	6,1	169	9,5	3,4	6,1	186
241.16.13.064	12,5	6,3	64	14,7	7,2	3,1	4,1	106	9,6	3,1	6,5	141	10,8	3,1	7,7	159	12,0	4,3	7,7	176
241.16.13.076	12,5	6,3	76	13,7	8,7	3,8	4,9	119	11,6	3,8	7,8	159	13,1	3,8	9,3	179	14,5	5,2	9,3	199
241.16.13.089	12,5	6,3	89	11,8	9,9	4,3	5,6	117	13,2	4,3	8,9	156	14,9	4,3	10,6	176	16,5	5,9	10,6	195
241.16.13.305	12,5	6,3	305	2,9	36,0	15,6	20,4	104	48,0	15,6	32,4	139	54,0	15,6	38,4	157	60,0	21,6	38,4	174

					55% stroke				62% stroke				80% stroke				100% stroke		
Order No	D_h	D_d	L_0	R	S_5	S_{v5}	S_{A5}	F_5	S_6	S_{v6}	S_{A6}	F_6	S_7	S_{v7}	S_{A7}	F_7	S_n	L_n	F_n
241.16.13.025	12,5	6,3	25	42,2	4,8	2,0	2,8	203	5,4	2,6	2,8	228	7,0	5,0	2,0	295	8,7	16,3	367,1
241.16.13.032	12,5	6,3	32	33,4	6,1	2,5	3,6	204	6,8	3,3	3,5	227	8,8	6,4	2,4	294	11,0	21,0	367,4
241.16.13.038	12,5	6,3	38	29,4	7,4	3,1	4,3	218	8,4	4,1	4,3	247	10,8	7,8	3,0	318	13,5	24,5	396,9
241.16.13.044	12,5	6,3	44	24,5	8,8	3,7	5,1	216	9,9	4,8	5,1	243	12,8	9,3	3,5	314	16,0	28,0	392,0
241.16.13.051	12,5	6,3	51	19,6	10,5	4,4	6,1	206	11,8	5,7	6,1	231	15,2	11,0	4,2	298	19,0	32,0	372,4
241.16.13.064	12,5	6,3	64	14,7	13,2	5,5	7,7	194	14,9	7,2	7,7	219	19,2	13,9	5,3	282	24,0	40,0	352,8
241.16.13.076	12,5	6,3	76	13,7	16,0	6,7	9,3	219	18,0	8,7	9,3	247	23,2	16,8	6,4	318	29,0	47,0	397,3
241.16.13.089	12,5	6,3	89	11,8	18,2	7,6	10,6	215	20,5	9,9	10,6	242	26,4	19,1	7,3	312	33,0	56,0	389,4
241.16.13.305	12,5	6,3	305	2,9	66,0	27,6	38,4	191	74,4	36,0	38,4	216	96,0	69,6	26,4	278	120,0	185,0	348,0

241.17. High Performance Compression Springs DIN ISO 10243 Colour: „Yellow“

					30% stroke				40% stroke				45% stroke				50% stroke			
Order No	D_h	D_d	L_0	R	S_1	S_{v1}	S_{A1}	F_1	S_2	S_{v2}	S_{A2}	F_2	S_3	S_{v3}	S_{A3}	F_3	S_4	S_{v4}	S_{A4}	F_4
241.17.13.025	12,5	6,3	25	58,6	2,7	1,2	1,5	158	3,6	1,2	2,4	211	4,1	1,2	2,9	237	4,5	1,6	2,9	264
241.17.13.032	12,5	6,3	32	43,9	3,2	1,4	1,8	140	4,2	1,4	2,9	186	4,8	1,4	3,4	209	5,3	1,9	3,4	233
241.17.13.038	12,5	6,3	38	36,0	3,9	1,7	2,2	140	5,2	1,7	3,5	187	5,9	1,7	4,2	211	6,5	2,3	4,2	234
241.17.13.044	12,5	6,3	44	30,3	4,7	2,0	2,6	141	6,2	2,0	4,2	188	7,0	2,0	5,0	211	7,8	2,8	5,0	235
241.17.13.051	12,5	6,3	51	26,2	5,4	2,3	3,1	141	7,2	2,3	4,9	189	8,1	2,3	5,8	212	9,0	3,2	5,8	236
241.17.13.064	12,5	6,3	64	21,2	6,6	2,9	3,7	140	8,8	2,9	5,9	187	9,9	2,9	7,0	210	11,0	4,0	7,0	233
241.17.13.076	12,5	6,3	76	17,1	8,1	3,5	4,6	139	10,8	3,5	7,3	185	12,2	3,5	8,6	208	13,5	4,9	8,6	231
241.17.13.089	12,5	6,3	89	14,5	9,9	4,3	5,6	144	13,2	4,3	8,9	191	14,9	4,3	10,6	215	16,5	5,9	10,6	239
241.17.13.305	12,5	6,3	305	4,3	33,6	14,6	19,0	144	44,8	14,6	30,2	193	50,4	14,6	35,8	217	56,0	20,2	35,8	241

					55% stroke				62% stroke				80% stroke				100% stroke		
Order No	D_h	D_d	L_0	R	S_5	S_{v5}	S_{A5}	F_5	S_6	S_{v6}	S_{A6}	F_6	S_7	S_{v7}	S_{A7}	F_7	S_n	L_n	F_n
241.17.13.025	12,5	6,3	25	58,6	5,0	2,1	2,9	290	5,6	2,7	2,9	327	7,2	5,2	2,0	422	9,0	16,0	527,1
241.17.13.032	12,5	6,3	32	43,9	5,8	2,4	3,4	256	6,6	3,2	3,4	289	8,5	6,1	2,3	372	10,6	21,4	465,3
241.17.13.038	12,5	6,3	38	36,0	7,2	3,0	4,2	257	8,1	3,9	4,2	290	10,4	7,5	2,9	374	13,0	25,0	468,0
241.17.13.044	12,5	6,3	44	30,3	8,5	3,6	5,0	258	9,6	4,7	5,0	291	12,4	9,0	3,4	376	15,5	28,5	469,7
241.17.13.051	12,5	6,3	51	26,2	9,9	4,1	5,8	259	11,2	5,4	5,8	292	14,4	10,4	4,0	377	18,0	33,0	471,6
241.17.13.064	12,5	6,3	64	21,2	12,1	5,1	7,0	257	13,6	6,6	7,0	289	17,6	12,8	4,8	373	22,0	42,0	466,4
241.17.13.076	12,5	6,3	76	17,1	14,9	6,2	8,6	254	16,7	8,1	8,6	286	21,6	15,7	5,9	369	27,0	49,0	461,7
241.17.13.089	12,5	6,3	89	14,5	18,2	7,6	10,6	263	20,5	9,9	10,6	297	26,4	19,1	7,3	383	33,0	56,0	478,5
241.17.13.305	12,5	6,3	305	4,3	61,6	25,8	35,8	265	69,4	33,6	35,8	299	89,6	65,0	24,6	385	112,0	193,0	481,6

High Performance Compression Springs
DIN ISO 10243



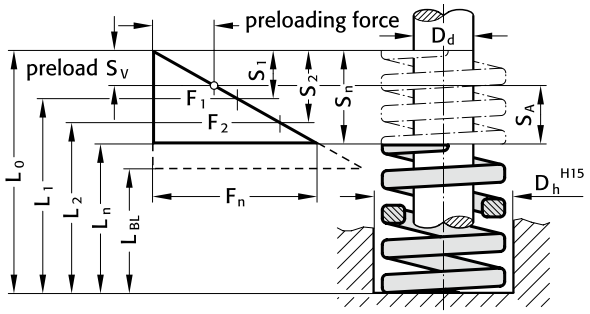

D_h = dia. of guide sleeve
D_d = diameter of guide pin
L_0 = free length of spring
$L_1...L_n$ = length of loaded spring (mm) as related to spring forces $F_1...F_n$
L_{BL} = length of compacted-spring (i.e. wire-to-wire)
$F_1...F_n$ = forces (N) as related to length of spring $L_1...L_n$
$S_{v1}...S_{v7}$ = recommend. preload. compression, as relat. to compress. $S_1...S_7$
$S_1...S_n$ = compr. as related to spring forces $F_1...F_n$
R = spring rate (N/mm)
$S_{A1}...S_{A7}$ = working stroke (mm)

241.14. High Performance Compression Springs DIN ISO 10243 Colour: „Green“

					30% stroke				40% stroke				45% stroke				50% stroke			
Order No	D_h	D_d	L_0	R	S_1	S_{v1}	S_{A1}	F_1	S_2	S_{v2}	S_{A2}	F_2	S_3	S_{v3}	S_{A3}	F_3	S_4	S_{v4}	S_{A4}	F_4
241.14.16.025	16,0	8,0	25	23,5	3,9	1,7	2,2	92	5,2	1,7	3,5	122	5,9	1,7	4,2	139	6,5	2,3	4,2	153
241.14.16.032	16,0	8,0	32	23,0	4,8	2,1	2,7	110	6,4	2,1	4,3	147	7,2	2,1	5,1	166	8,0	2,9	5,1	184
241.14.16.038	16,0	8,0	38	19,3	6,0	2,6	3,4	116	8,0	2,6	5,4	154	9,0	2,6	6,4	174	10,0	3,6	6,4	193
241.14.16.044	16,0	8,0	44	17,1	6,9	3,0	3,9	118	9,2	3,0	6,2	157	10,4	3,0	7,4	178	11,5	4,1	7,4	197
241.14.16.051	16,0	8,0	51	15,7	8,1	3,5	4,6	127	10,8	3,5	7,3	170	12,2	3,5	8,7	192	13,5	4,9	8,6	212
241.14.16.064	16,0	8,0	64	10,7	10,2	4,4	5,8	109	13,6	4,4	9,2	146	15,3	4,4	10,9	164	17,0	6,1	10,9	182
241.14.16.076	16,0	8,0	76	10,0	12,3	5,3	7,0	123	16,4	5,3	11,1	164	18,5	5,3	13,2	185	20,5	7,4	13,1	205
241.14.16.089	16,0	8,0	89	8,6	14,7	6,4	8,3	126	19,6	6,4	13,2	169	22,1	6,4	15,7	190	24,5	8,8	15,7	211
241.14.16.102	16,0	8,0	102	7,9	16,8	7,3	9,5	133	22,4	7,3	15,1	177	25,2	7,3	17,9	199	28,0	10,1	17,9	221
241.14.16.305	16,0	8,0	305	2,6	51,0	22,1	28,9	133	68,0	22,1	45,9	177	76,5	22,1	54,4	199	85,0	30,6	54,4	221

					55% stroke				62% stroke				80% stroke				100% stroke		
Order No	D_h	D_d	L_0	R	S_5	S_{v5}	S_{A5}	F_5	S_6	S_{v6}	S_{A6}	F_6	S_7	S_{v7}	S_{A7}	F_7	S_n	L_n	F_n
241.14.16.025	16,0	8,0	25	23,5	7,2	3,0	4,2	169	8,1	3,9	4,2	190	10,4	7,5	2,9	244	13,0	12,0	305,5
241.14.16.032	16,0	8,0	32	23,0	8,8	3,7	5,1	202	9,9	4,8	5,1	228	12,8	9,3	3,5	294	16,0	16,0	368,0
241.14.16.038	16,0	8,0	38	19,3	11,0	4,6	6,4	212	12,4	6,0	6,4	239	16,0	11,6	4,4	309	20,0	18,0	386,0
241.14.16.044	16,0	8,0	44	17,1	12,7	5,3	7,4	217	14,3	6,9	7,4	245	18,4	13,3	5,1	315	23,0	21,0	393,3
241.14.16.051	16,0	8,0	51	15,7	14,9	6,2	8,7	234	16,7	8,1	8,6	262	21,6	15,7	5,9	339	27,0	24,0	423,9
241.14.16.064	16,0	8,0	64	10,7	18,7	7,8	10,9	200	21,1	10,2	10,9	226	27,2	19,7	7,5	291	34,0	30,0	363,8
241.14.16.076	16,0	8,0	76	10,0	22,6	9,4	13,2	226	25,4	12,3	13,1	254	32,8	23,8	9,0	328	41,0	35,0	410,0
241.14.16.089	16,0	8,0	89	8,6	27,0	11,3	15,7	232	30,4	14,7	15,7	261	39,2	28,4	10,8	337	49,0	40,0	421,4
241.14.16.102	16,0	8,0	102	7,9	30,8	12,9	17,9	243	34,7	16,8	17,9	274	44,8	32,5	12,3	354	56,0	46,0	442,4
241.14.16.305	16,0	8,0	305	2,6	93,5	39,1	54,4	243	105,0	51,0	54,4	274	136,0	98,6	37,4	354	170,0	135,0	442,0

subject to alterations

High Performance Compression Springs
DIN ISO 10243

FIBRO

D_h = dia. of guide sleeve
D_d = diameter of guide pin
L_0 = free length of spring
$L_1...L_n$ = length of loaded spring (mm) as related to spring forces $F_1...F_n$
L_{BL} = length of compacted-spring (i.e. wire-to-wire)
$F_1...F_n$ = forces (N) as related to length of spring $L_1...L_n$
$S_{v1}...S_{v7}$ = recommend. preload. compression, as relat. to compress. $S_1...S_7$
$S_1...S_n$ = compr. as related to spring forces $F_1...F_n$
R = spring rate (N/mm)
$S_{A1}...S_{A7}$ = working stroke (mm)

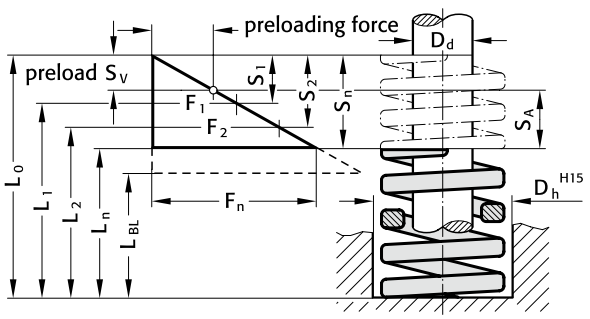



241.15. High Performance Compression Springs DIN ISO 10243 Colour: „Blue“

					30% stroke				40% stroke				45% stroke				50% stroke			
Order No	D_h	D_d	L_0	R	S_1	S_{v1}	S_{A1}	F_1	S_2	S_{v2}	S_{A2}	F_2	S_3	S_{v3}	S_{A3}	F_3	S_4	S_{v4}	S_{A4}	F_4
241.15.16.025	16,0	8,0	25	49,4	3,3	1,4	1,9	163	4,4	1,4	3,0	217	5,0	1,4	3,6	247	5,5	2,0	3,5	272
241.15.16.032	16,0	8,0	32	37,1	3,9	1,7	2,2	145	5,2	1,7	3,5	193	5,9	1,7	4,2	219	6,5	2,3	4,2	241
241.15.16.038	16,0	8,0	38	33,9	4,8	2,1	2,7	163	6,4	2,1	4,3	217	7,2	2,1	5,1	244	8,0	2,9	5,1	271
241.15.16.044	16,0	8,0	44	30,0	5,7	2,5	3,2	171	7,6	2,5	5,1	228	8,6	2,5	6,1	258	9,5	3,4	6,1	285
241.15.16.051	16,0	8,0	51	26,4	6,3	2,7	3,6	166	8,4	2,7	5,7	222	9,5	2,7	6,8	251	10,5	3,8	6,7	277
241.15.16.064	16,0	8,0	64	20,2	8,1	3,5	4,6	164	10,8	3,5	7,3	218	12,2	3,5	8,7	246	13,5	4,9	8,6	273
241.15.16.076	16,0	8,0	76	17,9	9,9	4,3	5,6	177	13,2	4,3	8,9	236	14,9	4,3	10,6	267	16,5	5,9	10,6	295
241.15.16.089	16,0	8,0	89	15,2	11,7	5,1	6,6	178	15,6	5,1	10,5	237	17,6	5,1	12,5	268	19,5	7,0	12,5	296
241.15.16.102	16,0	8,0	102	13,5	13,5	5,9	7,6	182	18,0	5,9	12,1	243	20,3	5,9	14,4	274	22,5	8,1	14,4	304
241.15.16.305	16,0	8,0	305	4,8	41,4	17,9	23,5	199	55,2	17,9	37,3	265	62,1	17,9	44,2	298	69,0	24,8	44,2	331

					55% stroke				62% stroke				80% stroke				100% stroke		
Order No	D_h	D_d	L_0	R	S_5	S_{v5}	S_{A5}	F_5	S_6	S_{v6}	S_{A6}	F_6	S_7	S_{v7}	S_{A7}	F_7	S_n	L_n	F_n
241.15.16.025	16,0	8,0	25	49,4	6,1	2,5	3,6	301	6,8	3,3	3,5	336	8,8	6,4	2,4	435	11,0	14,0	543,4
241.15.16.032	16,0	8,0	32	37,1	7,2	3,0	4,2	267	8,1	3,9	4,2	301	10,4	7,5	2,9	386	13,0	19,0	482,3
241.15.16.038	16,0	8,0	38	33,9	8,8	3,7	5,1	298	9,9	4,8	5,1	336	12,8	9,3	3,5	434	16,0	22,0	542,4
241.15.16.044	16,0	8,0	44	30,0	10,5	4,4	6,1	315	11,8	5,7	6,1	354	15,2	11,0	4,2	456	19,0	25,0	570,0
241.15.16.051	16,0	8,0	51	26,4	11,6	4,8	6,8	306	13,0	6,3	6,7	343	16,8	12,2	4,6	444	21,0	30,0	554,4
241.15.16.064	16,0	8,0	64	20,2	14,9	6,2	8,7	301	16,7	8,1	8,6	337	21,6	15,7	5,9	436	27,0	37,0	545,4
241.15.16.076	16,0	8,0	76	17,9	18,2	7,6	10,6	326	20,5	9,9	10,6	367	26,4	19,1	7,3	473	33,0	43,0	590,7
241.15.16.089	16,0	8,0	89	15,2	21,5	9,0	12,5	327	24,2	11,7	12,5	368	31,2	22,6	8,6	474	39,0	50,0	592,8
241.15.16.102	16,0	8,0	102	13,5	24,8	10,4	14,4	335	27,9	13,5	14,4	377	36,0	26,1	9,9	486	45,0	57,0	607,5
241.15.16.305	16,0	8,0	305	4,8	75,9	31,7	44,2	364	85,6	41,4	44,2	411	110,4	80,0	30,4	530	138,0	167,0	662,4

High Performance Compression Springs
DIN ISO 10243



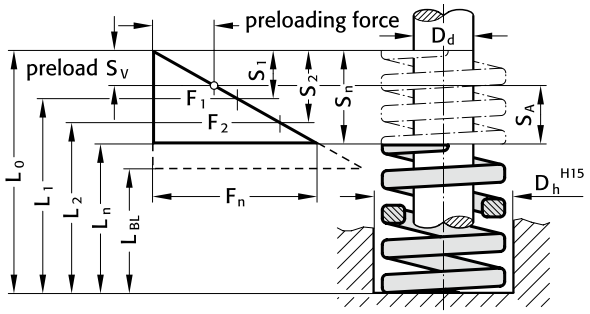

D_h = dia. of guide sleeve
D_d = diameter of guide pin
L_0 = free length of spring
$L_1...L_n$ = length of loaded spring (mm) as related to spring forces $F_1...F_n$
L_{BL} = length of compacted-spring (i.e. wire-to-wire)
$F_1...F_n$ = forces (N) as related to length of spring $L_1...L_n$
$S_{v1}...S_{v7}$ = recommend. preload. compression, as relat. to compress. $S_1...S_7$
$S_1...S_n$ = compr. as related to spring forces $F_1...F_n$
R = spring rate (N/mm)
$S_{A1}...S_{A7}$ = working stroke (mm)

241.16. High Performance Compression Springs DIN ISO 10243 Colour: „Red“

					30% stroke				40% stroke				45% stroke				50% stroke			
Order No	D_h	D_d	L_0	R	S_1	S_{v1}	S_{A1}	F_1	S_2	S_{v2}	S_{A2}	F_2	S_3	S_{v3}	S_{A3}	F_3	S_4	S_{v4}	S_{A4}	F_4
241.16.16.025	16,0	8,0	25	75,5	2,6	1,1	1,5	196	3,5	1,1	2,4	264	3,9	1,1	2,8	294	4,4	1,6	2,8	332
241.16.16.032	16,0	8,0	32	53,0	3,3	1,4	1,9	175	4,4	1,4	3,0	233	5,0	1,4	3,6	265	5,5	2,0	3,5	292
241.16.16.038	16,0	8,0	38	49,1	4,1	1,8	2,3	201	5,5	1,8	3,7	270	6,2	1,8	4,4	304	6,9	2,5	4,4	339
241.16.16.044	16,0	8,0	44	43,2	4,7	2,0	2,7	203	6,3	2,0	4,3	272	7,1	2,0	5,1	307	7,9	2,8	5,1	341
241.16.16.051	16,0	8,0	51	37,3	5,6	2,4	3,2	209	7,4	2,4	5,0	276	8,3	2,4	5,9	310	9,3	3,3	6,0	347
241.16.16.064	16,0	8,0	64	30,4	7,1	3,1	4,0	216	9,4	3,1	6,3	286	10,6	3,1	7,5	322	11,8	4,2	7,6	359
241.16.16.076	16,0	8,0	76	25,5	8,7	3,8	4,9	222	11,6	3,8	7,8	296	13,1	3,8	9,3	334	14,5	5,2	9,3	370
241.16.16.089	16,0	8,0	89	21,6	10,4	4,5	5,9	225	13,8	4,5	9,3	298	15,5	4,5	11,0	335	17,3	6,2	11,1	374
241.16.16.102	16,0	8,0	102	19,6	12,0	5,2	6,8	235	16,0	5,2	10,8	314	18,0	5,2	12,8	353	20,0	7,2	12,8	392
241.16.16.305	16,0	8,0	305	6,9	36,6	15,9	20,7	253	48,8	15,9	32,9	337	54,9	15,9	39,0	379	61,0	22,0	39,0	421

					55% stroke				62% stroke				80% stroke				100% stroke		
Order No	D_h	D_d	L_0	R	S_5	S_{v5}	S_{A5}	F_5	S_6	S_{v6}	S_{A6}	F_6	S_7	S_{v7}	S_{A7}	F_7	S_n	L_n	F_n
241.16.16.025	16,0	8,0	25	75,5	4,8	2,0	2,8	362	5,4	2,6	2,8	408	7,0	5,0	2,0	529	8,7	16,3	656,9
241.16.16.032	16,0	8,0	32	53,0	6,1	2,5	3,6	323	6,8	3,3	3,5	360	8,8	6,4	2,4	466	11,0	21,0	583,0
241.16.16.038	16,0	8,0	38	49,1	7,5	3,2	4,3	368	8,5	4,1	4,4	417	11,0	7,9	3,1	540	13,7	24,3	672,7
241.16.16.044	16,0	8,0	44	43,2	8,6	3,6	5,0	372	9,7	4,7	5,0	419	12,6	9,1	3,5	544	15,7	28,3	678,2
241.16.16.051	16,0	8,0	51	37,3	10,2	4,3	5,9	380	11,5	5,6	5,9	429	14,8	10,7	4,1	552	18,5	32,5	690,1
241.16.16.064	16,0	8,0	64	30,4	12,9	5,4	7,5	392	14,6	7,1	7,5	444	18,8	13,6	5,2	572	23,5	40,5	714,4
241.16.16.076	16,0	8,0	76	25,5	16,0	6,7	9,3	408	18,0	8,7	9,3	459	23,2	16,8	6,4	592	29,0	47,0	739,5
241.16.16.089	16,0	8,0	89	21,6	19,0	7,9	11,1	410	21,4	10,4	11,0	462	27,6	20,0	7,6	596	34,5	54,5	745,2
241.16.16.102	16,0	8,0	102	19,6	22,0	9,2	12,8	431	24,8	12,0	12,8	486	32,0	23,2	8,8	627	40,0	62,0	784,0
241.16.16.305	16,0	8,0	305	6,9	67,1	28,1	39,0	463	75,6	36,6	39,0	522	97,6	70,8	26,8	673	122,0	183,0	841,8

subject to alterations

High Performance Compression Springs
DIN ISO 10243

D_h = dia. of guide sleeve

D_d = diameter of guide pin

L_0 = free length of spring

$L_1...L_n$ = length of loaded spring (mm) as related to spring forces $F_1...F_n$

L_{BL} = length of compacted-spring (i.e. wire-to-wire)

$F_1...F_n$ = forces (N) as related to length of spring $L_1...L_n$

$S_{v1}...S_{v7}$ = recommend. preload. compression, as relat. to compress. $S_1...S_7$

$S_1...S_n$ = compr. as related to spring forces $F_1...F_n$

R = spring rate (N/mm)

$S_{A1}...S_{A7}$ = working stroke (mm)

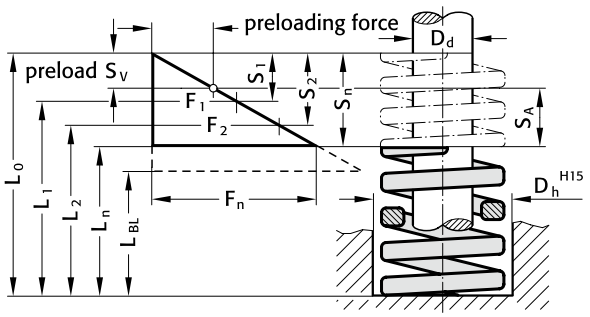



241.17. High Performance Compression Springs DIN ISO 10243 Colour: „Yellow“

					30% stroke				40% stroke				45% stroke				50% stroke			
Order No	D_h	D_d	L_0	R	S_1	S_{v1}	S_{A1}	F_1	S_2	S_{v2}	S_{A2}	F_2	S_3	S_{v3}	S_{A3}	F_3	S_4	S_{v4}	S_{A4}	F_4
241.17.16.025	16,0	8,0	25	118	2,7	1,2	1,5	319	3,6	1,2	2,4	425	4,1	1,2	2,9	484	4,5	1,6	2,9	531
241.17.16.032	16,0	8,0	32	89,1	3,2	1,4	1,8	285	4,3	1,4	2,9	383	4,9	1,4	3,5	437	5,4	1,9	3,5	481
241.17.16.038	16,0	8,0	38	72,1	3,9	1,7	2,2	281	5,2	1,7	3,5	375	5,9	1,7	4,2	425	6,5	2,3	4,2	469
241.17.16.044	16,0	8,0	44	60,9	4,5	2,0	2,5	274	6,0	2,0	4,0	365	6,8	2,0	4,8	414	7,5	2,7	4,8	457
241.17.16.051	16,0	8,0	51	52,3	5,4	2,3	3,1	282	7,2	2,3	4,9	377	8,1	2,3	5,8	424	9,0	3,2	5,8	471
241.17.16.064	16,0	8,0	64	41,2	6,6	2,9	3,7	272	8,8	2,9	5,9	363	9,9	2,9	7,0	408	11,0	4,0	7,0	453
241.17.16.076	16,0	8,0	76	34,1	8,0	3,4	4,6	273	10,6	3,4	7,2	361	11,9	3,4	8,5	406	13,3	4,8	8,5	454
241.17.16.089	16,0	8,0	89	29,5	9,5	4,1	5,4	280	12,6	4,1	8,5	372	14,2	4,1	10,1	419	15,8	5,7	10,1	466
241.17.16.102	16,0	8,0	102	25,6	11,0	4,7	6,3	282	14,6	4,7	9,9	374	16,4	4,7	11,7	420	18,3	6,6	11,7	468
241.17.16.305	16,0	8,0	305	8,4	33,0	14,3	18,7	277	44,0	14,3	29,7	370	49,5	14,3	35,2	416	55,0	19,8	35,2	462

					55% stroke				62% stroke				80% stroke				100% stroke		
Order No	D_h	D_d	L_0	R	S_5	S_{v5}	S_{A5}	F_5	S_6	S_{v6}	S_{A6}	F_6	S_7	S_{v7}	S_{A7}	F_7	S_n	L_n	F_n
241.17.16.025	16,0	8,0	25	118	5,0	2,1	2,9	590	5,6	2,7	2,9	661	7,2	5,2	2,0	850	9,0	16,0	1062,0
241.17.16.032	16,0	8,0	32	89,1	5,9	2,5	3,4	526	6,7	3,2	3,5	597	8,6	6,3	2,3	766	10,8	21,2	962,3
241.17.16.038	16,0	8,0	38	72,1	7,2	3,0	4,2	519	8,1	3,9	4,2	584	10,4	7,5	2,9	750	13,0	25,0	937,3
241.17.16.044	16,0	8,0	44	60,9	8,3	3,5	4,8	505	9,3	4,5	4,8	566	12,0	8,7	3,3	731	15,0	29,0	913,5
241.17.16.051	16,0	8,0	51	52,3	9,9	4,1	5,8	518	11,2	5,4	5,8	586	14,4	10,4	4,0	753	18,0	33,0	941,4
241.17.16.064	16,0	8,0	64	41,2	12,1	5,1	7,0	499	13,6	6,6	7,0	560	17,6	12,8	4,8	725	22,0	42,0	906,4
241.17.16.076	16,0	8,0	76	34,1	14,6	6,1	8,5	498	16,4	8,0	8,4	559	21,2	15,4	5,8	723	26,5	49,5	903,7
241.17.16.089	16,0	8,0	89	29,5	17,3	7,2	10,1	510	19,5	9,5	10,0	575	25,2	18,3	6,9	743	31,5	57,5	929,3
241.17.16.102	16,0	8,0	102	25,6	20,1	8,4	11,7	515	22,6	11,0	11,6	579	29,2	21,2	8,0	748	36,5	65,5	934,4
241.17.16.305	16,0	8,0	305	8,4	60,5	25,3	35,2	508	68,2	33,0	35,2	573	88,0	63,8	24,2	739	110,0	195,0	924,0

High Performance Compression Springs
DIN ISO 10243



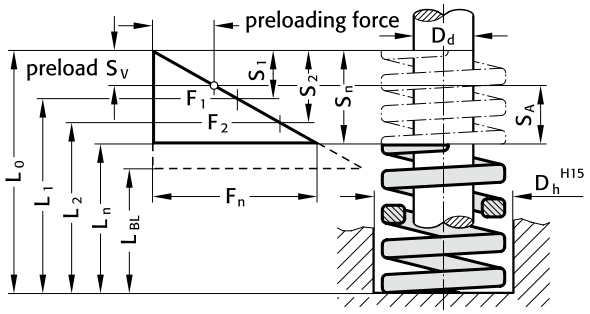

D_h = dia. of guide sleeve
D_d = diameter of guide pin
L_0 = free length of spring
$L_1...L_n$ = length of loaded spring (mm) as related to spring forces $F_1...F_n$
L_{BL} = length of compacted-spring (i.e. wire-to-wire)
$F_1...F_n$ = forces (N) as related to length of spring $L_1...L_n$
$S_{v1}...S_{v7}$ = recommend. preload. compression, as relat. to compress. $S_1...S_7$
$S_1...S_n$ = compr. as related to spring forces $F_1...F_n$
R = spring rate (N/mm)
$S_{A1}...S_{A7}$ = working stroke (mm)

241.14. High Performance Compression Springs DIN ISO 10243 Colour: „Green“

					30% stroke				40% stroke				45% stroke				50% stroke			
Order No	D_h	D_d	L_0	R	S_1	S_{v1}	S_{A1}	F_1	S_2	S_{v2}	S_{A2}	F_2	S_3	S_{v3}	S_{A3}	F_3	S_4	S_{v4}	S_{A4}	F_4
241.14.20.025	20,0	10,0	25	55,8	3,9	1,7	2,2	218	5,2	1,7	3,5	290	5,9	1,7	4,2	329	6,5	2,3	4,2	363
241.14.20.032	20,0	10,0	32	45,0	4,8	2,1	2,7	216	6,4	2,1	4,3	288	7,2	2,1	5,1	324	8,0	2,9	5,1	360
241.14.20.038	20,0	10,0	38	33,4	5,7	2,5	3,2	190	7,6	2,5	5,1	254	8,6	2,5	6,1	287	9,5	3,4	6,1	317
241.14.20.044	20,0	10,0	44	30,0	6,9	3,0	3,9	207	9,2	3,0	6,2	276	10,4	3,0	7,4	312	11,5	4,1	7,4	345
241.14.20.051	20,0	10,0	51	24,5	7,8	3,4	4,4	191	10,4	3,4	7,0	255	11,7	3,4	8,3	287	13,0	4,7	8,3	319
241.14.20.064	20,0	10,0	64	20,0	9,6	4,2	5,4	192	12,8	4,2	8,6	256	14,4	4,2	10,2	288	16,0	5,8	10,2	320
241.14.20.076	20,0	10,0	76	16,0	12,0	5,2	6,8	192	16,0	5,2	10,8	256	18,0	5,2	12,8	288	20,0	7,2	12,8	320
241.14.20.089	20,0	10,0	89	14,0	13,8	6,0	7,8	193	18,4	6,0	12,4	258	20,7	6,0	14,7	290	23,0	8,3	14,7	322
241.14.20.102	20,0	10,0	102	12,0	15,9	6,9	9,0	191	21,2	6,9	14,3	254	23,9	6,9	17,0	287	26,5	9,5	17,0	318
241.14.20.115	20,0	10,0	115	10,9	18,0	7,8	10,2	196	24,0	7,8	16,2	262	27,0	7,8	19,2	294	30,0	10,8	19,2	327
241.14.20.127	20,0	10,0	127	9,5	20,1	8,7	11,4	191	26,8	8,7	18,1	255	30,2	8,7	21,5	287	33,5	12,1	21,4	318
241.14.20.139	20,0	10,0	139	8,4	21,9	9,5	12,4	184	29,2	9,5	19,7	245	32,9	9,5	23,4	276	36,5	13,1	23,4	307
241.14.20.152	20,0	10,0	152	7,6	24,3	10,5	13,8	185	32,4	10,5	21,9	246	36,5	10,5	26,0	277	40,5	14,6	25,9	308
241.14.20.305	20,0	10,0	305	4,0	48,6	21,1	27,5	194	64,8	21,1	43,7	259	72,9	21,1	51,8	292	81,0	29,2	51,8	324

					55% stroke				62% stroke				80% stroke				100% stroke		
Order No	D_h	D_d	L_0	R	S_5	S_{v5}	S_{A5}	F_5	S_6	S_{v6}	S_{A6}	F_6	S_7	S_{v7}	S_{A7}	F_7	S_n	L_n	F_n
241.14.20.025	20,0	10,0	25	55,8	7,2	3,0	4,2	402	8,1	3,9	4,2	452	10,4	7,5	2,9	580	13,0	12,0	725,4
241.14.20.032	20,0	10,0	32	45,0	8,8	3,7	5,1	396	9,9	4,8	5,1	446	12,8	9,3	3,5	576	16,0	16,0	720,0
241.14.20.038	20,0	10,0	38	33,4	10,5	4,4	6,1	351	11,8	5,7	6,1	394	15,2	11,0	4,2	508	19,0	19,0	634,6
241.14.20.044	20,0	10,0	44	30,0	12,7	5,3	7,4	381	14,3	6,9	7,4	429	18,4	13,3	5,1	552	23,0	21,0	690,0
241.14.20.051	20,0	10,0	51	24,5	14,3	6,0	8,3	350	16,1	7,8	8,3	394	20,8	15,1	5,7	510	26,0	25,0	637,0
241.14.20.064	20,0	10,0	64	20,0	17,6	7,4	10,2	352	19,8	9,6	10,2	396	25,6	18,6	7,0	512	32,0	32,0	640,0
241.14.20.076	20,0	10,0	76	16,0	22,0	9,2	12,8	352	24,8	12,0	12,8	397	32,0	23,2	8,8	512	40,0	36,0	640,0
241.14.20.089	20,0	10,0	89	14,0	25,3	10,6	14,7	354	28,5	13,8	14,7	399	36,8	26,7	10,1	515	46,0	43,0	644,0
241.14.20.102	20,0	10,0	102	12,0	29,2	12,2	17,0	350	32,9	15,9	17,0	395	42,4	30,7	11,7	509	53,0	49,0	636,0
241.14.20.115	20,0	10,0	115	10,9	33,0	13,8	19,2	360	37,2	18,0	19,2	405	48,0	34,8	13,2	523	60,0	55,0	654,0
241.14.20.127	20,0	10,0	127	9,5	36,9	15,4	21,5	351	41,5	20,1	21,4	394	53,6	38,9	14,7	509	67,0	60,0	636,5
241.14.20.139	20,0	10,0	139	8,4	40,2	16,8	23,4	338	45,3	21,9	23,4	381	58,4	42,3	16,1	491	73,0	66,0	613,2
241.14.20.152	20,0	10,0	152	7,6	44,6	18,6	26,0	339	50,2	24,3	25,9	382	64,8	47,0	17,8	492	81,0	71,0	615,6
241.14.20.305	20,0	10,0	305	4,0	89,1	37,3	51,8	356	100,0	48,6	51,8	402	129,6	94,0	35,6	518	162,0	143,0	648,0

subject to alterations

High Performance Compression Springs
DIN ISO 10243

D_h = dia. of guide sleeve

D_d = diameter of guide pin

L_0 = free length of spring

$L_1...L_n$ = length of loaded spring (mm) as related to spring forces $F_1...F_n$

L_{BL} = length of compacted-spring (i.e. wire-to-wire)

$F_1...F_n$ = forces (N) as related to length of spring $L_1...L_n$

$S_{v1}...S_{v7}$ = recommend. preload. compression, as relat. to compress. $S_1...S_7$

$S_1...S_n$ = compr. as related to spring forces $F_1...F_n$

R = spring rate (N/mm)

$S_{A1}...S_{A7}$ = working stroke (mm)

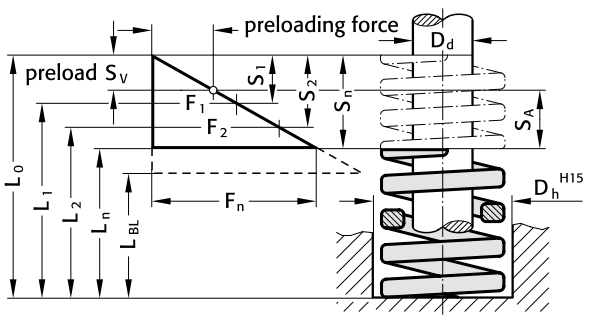



241.15. High Performance Compression Springs DIN ISO 10243 Colour: „Blue“

					30% stroke				40% stroke				45% stroke				50% stroke			
Order No	D_h	D_d	L_0	R	S_1	S_{v1}	S_{A1}	F_1	S_2	S_{v2}	S_{A2}	F_2	S_3	S_{v3}	S_{A3}	F_3	S_4	S_{v4}	S_{A4}	F_4
241.15.20.025	20,0	10,0	25	98,1	3,3	1,4	1,9	324	4,4	1,4	3,0	432	5,0	1,4	3,6	491	5,5	2,0	3,5	540
241.15.20.032	20,0	10,0	32	72,7	3,9	1,7	2,2	284	5,2	1,7	3,5	378	5,9	1,7	4,2	429	6,5	2,3	4,2	473
241.15.20.038	20,0	10,0	38	56,0	4,8	2,1	2,7	269	6,4	2,1	4,3	358	7,2	2,1	5,1	403	8,0	2,9	5,1	448
241.15.20.044	20,0	10,0	44	47,6	5,7	2,5	3,2	271	7,6	2,5	5,1	362	8,6	2,5	6,1	409	9,5	3,4	6,1	452
241.15.20.051	20,0	10,0	51	41,7	6,3	2,7	3,6	263	8,4	2,7	5,7	350	9,5	2,7	6,8	396	10,5	3,8	6,7	438
241.15.20.064	20,0	10,0	64	32,3	8,1	3,5	4,6	262	10,8	3,5	7,3	349	12,2	3,5	8,7	394	13,5	4,9	8,6	436
241.15.20.076	20,0	10,0	76	25,1	9,9	4,3	5,6	248	13,2	4,3	8,9	331	14,9	4,3	10,6	374	16,5	5,9	10,6	414
241.15.20.089	20,0	10,0	89	22,0	11,7	5,1	6,6	257	15,6	5,1	10,5	343	17,6	5,1	12,5	387	19,5	7,0	12,5	429
241.15.20.102	20,0	10,0	102	19,8	13,2	5,7	7,5	261	17,6	5,7	11,9	348	19,8	5,7	14,1	392	22,0	7,9	14,1	436
241.15.20.115	20,0	10,0	115	18,2	14,7	6,4	8,3	268	19,6	6,4	13,2	357	22,1	6,4	15,7	402	24,5	8,8	15,7	446
241.15.20.127	20,0	10,0	127	16,6	16,5	7,2	9,3	274	22,0	7,2	14,8	365	24,8	7,2	17,6	412	27,5	9,9	17,6	457
241.15.20.139	20,0	10,0	139	15,1	18,3	7,9	10,4	276	24,4	7,9	16,5	368	27,5	7,9	19,6	415	30,5	11,0	19,5	461
241.15.20.152	20,0	10,0	152	13,2	19,8	8,6	11,2	261	26,4	8,6	17,8	348	29,7	8,6	21,1	392	33,0	11,9	21,1	436
241.15.20.305	20,0	10,0	305	6,1	40,8	17,7	23,1	249	54,4	17,7	36,7	332	61,2	17,7	43,5	373	68,0	24,5	43,5	415

					55% stroke				62% stroke				80% stroke				100% stroke		
Order No	D_h	D_d	L_0	R	S_5	S_{v5}	S_{A5}	F_5	S_6	S_{v6}	S_{A6}	F_6	S_7	S_{v7}	S_{A7}	F_7	S_n	L_n	F_n
241.15.20.025	20,0	10,0	25	98,1	6,1	2,5	3,6	598	6,8	3,3	3,5	667	8,8	6,4	2,4	863	11,0	14,0	1079,1
241.15.20.032	20,0	10,0	32	72,7	7,2	3,0	4,2	523	8,1	3,9	4,2	589	10,4	7,5	2,9	756	13,0	19,0	945,1
241.15.20.038	20,0	10,0	38	56,0	8,8	3,7	5,1	493	9,9	4,8	5,1	554	12,8	9,3	3,5	717	16,0	22,0	896,0
241.15.20.044	20,0	10,0	44	47,6	10,5	4,4	6,1	500	11,8	5,7	6,1	562	15,2	11,0	4,2	724	19,0	25,0	904,4
241.15.20.051	20,0	10,0	51	41,7	11,6	4,8	6,8	484	13,0	6,3	6,7	542	16,8	12,2	4,6	701	21,0	30,0	875,7
241.15.20.064	20,0	10,0	64	32,3	14,9	6,2	8,7	481	16,7	8,1	8,6	539	21,6	15,7	5,9	698	27,0	37,0	872,1
241.15.20.076	20,0	10,0	76	25,1	18,2	7,6	10,6	457	20,5	9,9	10,6	515	26,4	19,1	7,3	663	33,0	43,0	828,3
241.15.20.089	20,0	10,0	89	22,0	21,5	9,0	12,5	473	24,2	11.7	12,5	532	31,2	22,6	8,6	686	39,0	50,0	858,0
241.15.20.102	20,0	10,0	102	19,8	24,2	10,1	14,1	479	27,3	13,2	14,1	541	35,2	25,5	9,7	697	44,0	58,0	871,2
241.15.20.115	20,0	10,0	115	18,2	27,0	11,3	15,7	491	30,4	14,7	15,7	553	39,2	28,4	10,8	713	49,0	66,0	891,8
241.15.20.127	20,0	10,0	127	16,6	30,3	12,7	17,6	503	34,1	16,5	17,6	566	44,0	31,9	12,1	730	55,0	72,0	913,0
241.15.20.139	20,0	10,0	139	15,1	33,6	14,0	19,6	507	37,8	18,3	19,5	571	48,8	35,4	13,4	737	61,0	78,0	921,1
241.15.20.152	20,0	10,0	152	13,2	36,3	15,2	21,1	479	40,9	19,8	21,1	540	52,8	38,3	14,5	697	66,0	86,0	871,2
241.15.20.305	20,0	10,0	305	6,1	74,8	31,3	43,5	456	84,3	40,8	43,5	514	108,8	78,9	29,9	664	136,0	169,0	829,6

High Performance Compression Springs
DIN ISO 10243



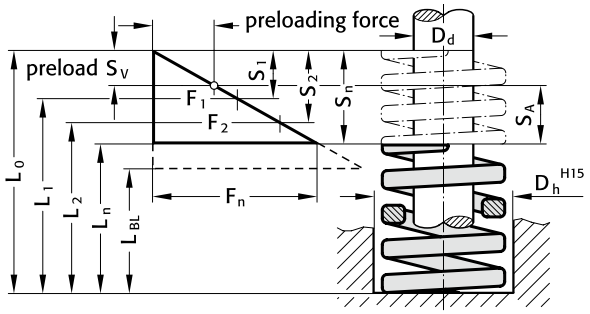

D_h = dia. of guide sleeve
D_d = diameter of guide pin
L_0 = free length of spring
$L_1...L_n$ = length of loaded spring (mm) as related to spring forces $F_1...F_n$
L_{BL} = length of compacted-spring (i.e. wire-to-wire)
$F_1...F_n$ = forces (N) as related to length of spring $L_1...L_n$
$S_{v1}...S_{v7}$ = recommend. preload. compression, as relat. to compress. $S_1...S_7$
$S_1...S_n$ = compr. as related to spring forces $F_1...F_n$
R = spring rate (N/mm)
$S_{A1}...S_{A7}$ = working stroke (mm)

241.16. High Performance Compression Springs DIN ISO 10243 Colour: „Red“

					30% stroke				40% stroke				45% stroke				50% stroke			
Order No	D_h	D_d	L_0	R	S_1	S_{v1}	S_{A1}	F_1	S_2	S_{v2}	S_{A2}	F_2	S_3	S_{v3}	S_{A3}	F_3	S_4	S_{v4}	S_{A4}	F_4
241.16.20.025	20,0	10,0	25	215,8	2,5	1,1	1,4	540	3,4	1,1	2,3	734	3,8	1,1	2,7	820	4,2	1,5	2,7	906
241.16.20.032	20,0	10,0	32	167,8	3,2	1,4	1,8	537	4,2	1,4	2,8	705	4,7	1,4	3,3	789	5,3	1,9	3,4	889
241.16.20.038	20,0	10,0	38	133,4	3,8	1,6	2,2	507	5,0	1,6	3,4	667	5,6	1,6	4,0	747	6,3	2,3	4,0	840
241.16.20.044	20,0	10,0	44	111,8	4,4	1,9	2,5	492	5,8	1,9	3,9	648	6,5	1,9	4,6	727	7,3	2,6	4,7	816
241.16.20.051	20,0	10,0	51	94,2	5,0	2,1	2,9	471	6,6	2,1	4,5	622	7,4	2,1	5,3	697	8,3	3,0	5,3	782
241.16.20.064	20,0	10,0	64	72,6	6,3	2,7	3,6	457	8,4	2,7	5,7	610	9,5	2,7	6,8	690	10,5	3,8	6,7	762
241.16.20.076	20,0	10,0	76	59,8	7,8	3,4	4,4	466	10,4	3,4	7,0	622	11,7	3,4	8,3	700	13,0	4,7	8,3	777
241.16.20.089	20,0	10,0	89	51,0	9,0	3,9	5,1	459	12,0	3,9	8,1	612	13,5	3,9	9,6	689	15,0	5,4	9,6	765
241.16.20.102	20,0	10,0	102	44,1	10,5	4,6	5,9	463	14,0	4,6	9,4	617	15,8	4,6	11,2	697	17,5	6,3	11,2	772
241.16.20.115	20,0	10,0	115	38,3	12,0	5,2	6,8	460	16,0	5,2	10,8	613	18,0	5,2	12,8	689	20,0	7,2	12,8	766
241.16.20.127	20,0	10,0	127	34,3	13,2	5,7	7,5	453	17,6	5,7	11,9	604	19,8	5,7	14,1	679	22,0	7,9	14,1	755
241.16.20.139	20,0	10,0	139	31,4	14,7	6,4	8,3	462	19,6	6,4	13,2	615	22,1	6,4	15,7	694	24,5	8,8	15,7	769
241.16.20.152	20,0	10,0	152	28,4	15,9	6,9	9,0	452	21,2	6,9	14,3	602	23,9	6,9	17,0	679	26,5	9,5	17,0	753
241.16.20.305	20,0	10,0	305	14,7	32,4	14,0	18,4	476	43,2	14,0	29,2	635	48,6	14,0	34,6	714	54,0	19,4	34,6	794

					55% stroke				62% stroke				80% stroke				100% stroke		
Order No	D_h	D_d	L_0	R	S_5	S_{v5}	S_{A5}	F_5	S_6	S_{v6}	S_{A6}	F_6	S_7	S_{v7}	S_{A7}	F_7	S_n	L_n	F_n
241.16.20.025	20,0	10,0	25	215,8	4,6	1,9	2,7	993	5,2	2,5	2,7	1122	6,7	4,9	1,8	1446	8,4	16,6	1812,7
241.16.20.032	20,0	10,0	32	167,8	5,8	2,4	3,4	973	6,5	3,2	3,3	1091	8,4	6,1	2,3	1410	10,5	21,5	1761,9
241.16.20.038	20,0	10,0	38	133,4	6,9	2,9	4,0	920	7,8	3,8	4,0	1041	10,0	7,3	2,7	1334	12,5	25,5	1667,5
241.16.20.044	20,0	10,0	44	111,8	8,0	3,3	4,7	894	9,0	4,4	4,6	1006	11,6	8,4	3,2	1297	14,5	29,5	1621,1
241.16.20.051	20,0	10,0	51	94,2	9,1	3,8	5,3	857	10,2	5,0	5,2	961	13,2	9,6	3,6	1243	16,5	34,5	1554,3
241.16.20.064	20,0	10,0	64	72,6	11,6	4,8	6,8	842	13,0	6,3	6,7	944	16,8	12,2	4,6	1220	21,0	43,0	1524,6
241.16.20.076	20,0	10,0	76	59,8	14,3	6,0	8,3	855	16,1	7,8	8,3	963	20,8	15,1	5,7	1244	26,0	50,0	1554,8
241.16.20.089	20,0	10,0	89	51,0	16,5	6,9	9,6	842	18,6	9,0	9,6	949	24,0	17,4	6,6	1224	30,0	59,0	1530,0
241.16.20.102	20,0	10,0	102	44,1	19,3	8,1	11,2	851	21,7	10,5	11,2	957	28,0	20,3	7,7	1235	35,0	67,0	1543,5
241.16.20.115	20,0	10,0	115	38,3	22,0	9,2	12,8	843	24,8	12,0	12,8	950	32,0	23,2	8,8	1226	40,0	75,0	1532,0
241.16.20.127	20,0	10,0	127	34,3	24,2	10,1	14,1	830	27,3	13,2	14,1	936	35,2	25,5	9,7	1207	44,0	83,0	1509,2
241.16.20.139	20,0	10,0	139	31,4	27,0	11,3	15,7	848	30,4	14,7	15,7	955	39,2	28,4	10,8	1231	49,0	90,0	1538,6
241.16.20.152	20,0	10,0	152	28,4	29,2	12,2	17,0	829	32,9	15,9	17,0	934	42,4	30,7	11,7	1204	53,0	99,0	1505,2
241.16.20.305	20,0	10,0	305	14,7	59,4	24,8	34,6	873	67,0	32,4	34,6	985	86,4	62,6	23,8	1270	108,0	197,0	1587,6

subject to alterations

High Performance Compression Springs
DIN ISO 10243

D_h = dia. of guide sleeve

D_d = diameter of guide pin

L_0 = free length of spring

$L_1...L_n$ = length of loaded spring (mm) as related to spring forces $F_1...F_n$

L_{BL} = length of compacted-spring (i.e. wire-to-wire)

$F_1...F_n$ = forces (N) as related to length of spring $L_1...L_n$

$S_{v1}...S_{v7}$ = recommend. preload. compression, as relat. to compress. $S_1...S_7$

$S_1...S_n$ = compr. as related to spring forces $F_1...F_n$

R = spring rate (N/mm)

$S_{A1}...S_{A7}$ = working stroke (mm)

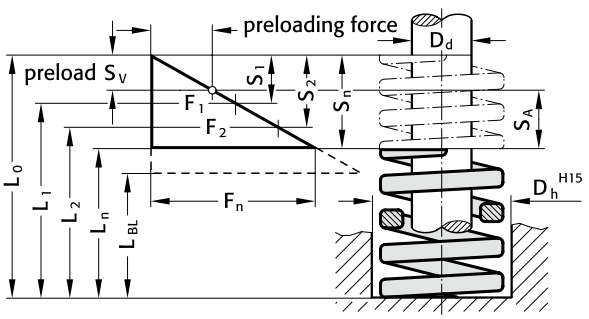



241.17. High Performance Compression Springs DIN ISO 10243 Colour: „Yellow“

					30% stroke				40% stroke				45% stroke				50% stroke			
Order No	D_h	D_d	L_0	R	S_1	S_{v1}	S_{A1}	F_1	S_2	S_{v2}	S_{A2}	F_2	S_3	S_{v3}	S_{A3}	F_3	S_4	S_{v4}	S_{A4}	F_4
241.17.20.025	20,0	10,0	25	293	2,3	1,0	1,3	674	3,1	1,0	2,1	908	3,5	1,0	2,5	1026	3,9	1,4	2,5	1143
241.17.20.032	20,0	10,0	32	224	2,9	1,3	1,6	650	3,9	1,3	2,6	874	4,4	1,3	3,1	986	4,9	1,8	3,1	1098
241.17.20.038	20,0	10,0	38	177	3,6	1,6	2,0	637	4,8	1,6	3,2	850	5,4	1,6	3,8	956	6,0	2,2	3,8	1062
241.17.20.044	20,0	10,0	44	149	4,2	1,8	2,4	626	5,6	1,8	3,8	834	6,3	1,8	4,5	939	7,0	2,5	4,5	1043
241.17.20.051	20,0	10,0	51	128	4,8	2,1	2,7	614	6,4	2,1	4,3	819	7,2	2,1	5,1	922	8,0	2,9	5,1	1024
241.17.20.064	20,0	10,0	64	99,1	6,3	2,7	3,6	624	8,4	2,7	5,7	832	9,5	2,7	6,8	941	10,5	3,8	6,7	1041
241.17.20.076	20,0	10,0	76	86,6	7,5	3,3	4,2	650	10,0	3,3	6,7	866	11,3	3,3	8,0	979	12,5	4,5	8,0	1083
241.17.20.089	20,0	10,0	89	69,6	9,0	3,9	5,1	626	12,0	3,9	8,1	835	13,5	3,9	9,6	940	15,0	5,4	9,6	1044
241.17.20.102	20,0	10,0	102	60,6	10,2	4,4	5,8	618	13,6	4,4	9,2	824	15,3	4,4	10,9	927	17,0	6,1	10,9	1030
241.17.20.115	20,0	10,0	115	53,1	11,4	4,9	6,5	605	15,2	4,9	10,3	807	17,1	4,9	12,2	908	19,0	6,8	12,2	1009
241.17.20.127	20,0	10,0	127	47,6	12,9	5,6	7,3	614	17,2	5,6	11,6	819	19,4	5,6	13,8	923	21,5	7,7	13,8	1023
241.17.20.139	20,0	10,0	139	43,1	14,1	6,1	8,0	608	18,8	6,1	12,7	810	21,2	6,1	15,1	914	23,5	8,5	15,0	1013
241.17.20.152	20,0	10,0	152	39,0	15,3	6,6	8,7	597	20,4	6,6	13,8	796	23,0	6,6	16,4	897	25,5	9,2	16,3	995
241.17.20.305	20,0	10,0	305	21,2	31,5	13,7	17,8	668	42,0	13,7	28,3	890	47,3	13,7	33,6	1003	52,5	18,9	33,6	1113

					55% stroke				62% stroke				80% stroke				100% stroke		
Order No	D_h	D_d	L_0	R	S_5	S_{v5}	S_{A5}	F_5	S_6	S_{v6}	S_{A6}	F_6	S_7	S_{v7}	S_{A7}	F_7	S_n	L_n	F_n
241.17.20.025	20,0	10,0	25	293	4,2	1,8	2,4	1231	4,8	2,3	2,5	1406	6,2	4,5	1,7	1817	7,7	17,3	2256,1
241.17.20.032	20,0	10,0	32	224	5,4	2,3	3,1	1210	6,1	2,9	3,2	1366	7,8	5,7	2,1	1747	9,8	22,2	2195,2
241.17.20.038	20,0	10,0	38	177	6,6	2,8	3,8	1168	7,4	3,6	3,8	1310	9,6	7,0	2,6	1699	12,0	26,0	2124,0
241.17.20.044	20,0	10,0	44	149	7,7	3,2	4,5	1147	8,7	4,2	4,5	1296	11,2	8,1	3,1	1669	14,0	30,0	2086,0
241.17.20.051	20,0	10,0	51	128	8,8	3,7	5,1	1126	9,9	4,8	5,1	1267	12,8	9,3	3,5	1638	16,0	35,0	2048,0
241.17.20.064	20,0	10,0	64	99,1	11,6	4,8	6,8	1150	13,0	6,3	6,7	1288	16,8	12,2	4,6	1665	21,0	43,0	2081,1
241.17.20.076	20,0	10,0	76	86,6	13,8	5,8	8,0	1195	15,5	7,5	8,0	1342	20,0	14,5	5,5	1732	25,0	51,0	2165,0
241.17.20.089	20,0	10,0	89	69,6	16,5	6,9	9,6	1148	18,6	9,0	9,6	1295	24,0	17,4	6,6	1670	30,0	59,0	2088,0
241.17.20.102	20,0	10,0	102	60,6	18,7	7,8	10,9	1133	21,1	10,2	10,9	1279	27,2	19,7	7,5	1648	34,0	68,0	2060,4
241.17.20.115	20,0	10,0	115	53,1	20,9	8,7	12,2	1110	23,6	11,4	12,2	1253	30,4	22,0	8,4	1614	38,0	77,0	2017,8
241.17.20.127	20,0	10,0	127	47,6	23,7	9,9	13,8	1128	26,7	12,9	13,8	1271	34,4	24,9	9,5	1637	43,0	84,0	2046,8
241.17.20.139	20,0	10,0	139	43,1	25,9	10,8	15,1	1116	29,1	14,1	15,0	1254	37,6	27,3	10,3	1621	47,0	92,0	2025,7
241.17.20.152	20,0	10,0	152	39,0	28,1	11,7	16,4	1096	31,6	15,3	16,3	1232	40,8	29,6	11,2	1591	51,0	101,0	1989,0
241.17.20.305	20,0	10,0	305	21,2	57,8	24,2	33,6	1225	65,1	31,5	33,6	1380	84,0	60,9	23,1	1781	105,0	200,0	2226,0

High Performance Compression Springs
DIN ISO 10243



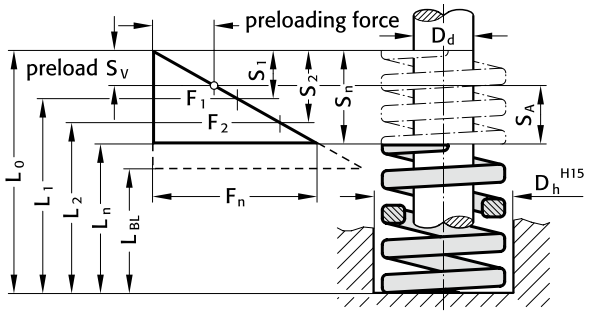

D_h = dia. of guide sleeve
D_d = diameter of guide pin
L_0 = free length of spring
$L_1...L_n$ = length of loaded spring (mm) as related to spring forces $F_1...F_n$
L_{BL} = length of compacted-spring (i.e. wire-to-wire)
$F_1...F_n$ = forces (N) as related to length of spring $L_1...L_n$
$S_{v1}...S_{v7}$ = recommend. preload. compression, as relat. to compress. $S_1...S_7$
$S_1...S_n$ = compr. as related to spring forces $F_1...F_n$
R = spring rate (N/mm)
$S_{A1}...S_{A7}$ = working stroke (mm)

241.14. High Performance Compression Springs DIN ISO 10243 Colour: „Green“

					30% stroke				40% stroke				45% stroke				50% stroke			
Order No	D_h	D_d	L_0	R	S_1	S_{v1}	S_{A1}	F_1	S_2	S_{v2}	S_{A2}	F_2	S_3	S_{v3}	S_{A3}	F_3	S_4	S_{v4}	S_{A4}	F_4
241.14.25.025	25,0	12,5	25	100,0	3,9	1,7	2,2	390	5,2	1,7	3,5	520	5,9	1,7	4,2	590	6,5	2,3	4,2	650
241.14.25.032	25,0	12,5	32	80,3	4,8	2,1	2,7	385	6,4	2,1	4,3	514	7,2	2,1	5,1	578	8,0	2,9	5,1	642
241.14.25.038	25,0	12,5	38	62,0	5,7	2,5	3,2	353	7,6	2,5	5,1	471	8,6	2,5	6,1	533	9,5	3,4	6,1	589
241.14.25.044	25,0	12,5	44	53,0	6,9	3,0	3,9	366	9,2	3,0	6,2	488	10,4	3,0	7,4	551	11,5	4,1	7,4	610
241.14.25.051	25,0	12,5	51	44,1	7,5	3,3	4,2	331	10,0	3,3	6,7	441	11,3	3,3	8,0	498	12,5	4,5	8,0	551
241.14.25.064	25,0	12,5	64	35,2	9,3	4,0	5,3	327	12,4	4,0	8,4	436	14,0	4,0	10,0	493	15,5	5,6	9,9	546
241.14.25.076	25,0	12,5	76	28,1	11,7	5,1	6,6	329	15,6	5,1	10,5	438	17,6	5,1	12,5	495	19,5	7,0	12,5	548
241.14.25.089	25,0	12,5	89	24,0	13,8	6,0	7,8	331	18,4	6,0	12,4	442	20,7	6,0	14,7	497	23,0	8,3	14,7	552
241.14.25.102	25,0	12,5	102	21,1	15,6	6,8	8,8	329	20,8	6,8	14,0	439	23,4	6,8	16,6	494	26,0	9,4	16,6	549
241.14.25.115	25,0	12,5	115	18,7	17,7	7,7	10,0	331	23,6	7,7	15,9	441	26,6	7,7	18,9	497	29,5	10,6	18,9	552
241.14.25.127	25,0	12,5	127	16,7	19,8	8,6	11,2	331	26,4	8,6	17,8	441	29,7	8,6	21,1	496	33,0	11,9	21,1	551
241.14.25.139	25,0	12,5	139	15,3	22,2	9,6	12,6	340	29,6	9,6	20,0	453	33,3	9,6	23,7	509	37,0	13,3	23,7	566
241.14.25.152	25,0	12,5	152	14,0	24,0	10,4	13,6	336	32,0	10,4	21,6	448	36,0	10,4	25,6	504	40,0	14,4	25,6	560
241.14.25.178	25,0	12,5	178	12,6	27,9	12,1	15,8	352	37,2	12,1	25,1	469	41,9	12,1	29,8	528	46,5	16,7	29,8	586
241.14.25.203	25,0	12,5	203	10,4	32,1	13,9	18,2	334	42,8	13,9	28,9	445	48,2	13,9	34,3	501	53,5	19,3	34,2	556
241.14.25.305	25,0	12,5	305	7,0	48,0	20,8	27,2	336	64,0	20,8	43,2	448	72,0	20,8	51,2	504	80,0	28,8	51,2	560

					55% stroke				62% stroke				80% stroke				100% stroke		
Order No	D_h	D_d	L_0	R	S_5	S_{v5}	S_{A5}	F_5	S_6	S_{v6}	S_{A6}	F_6	S_7	S_{v7}	S_{A7}	F_7	S_n	L_n	F_n
241.14.25.025	25,0	12,5	25	100,0	7,2	3,0	4,2	720	8,1	3,9	4,2	810	10,4	7,5	2,9	1040	13,0	12,0	1300,0
241.14.25.032	25,0	12,5	32	80,3	8,8	3,7	5,1	707	9,9	4,8	5,1	795	12,8	9,3	3,5	1028	16,0	16,0	1284,8
241.14.25.038	25,0	12,5	38	62,0	10,5	4,4	6,1	651	11,8	5,7	6,1	732	15,2	11,0	4,2	942	19,0	19,0	1178,0
241.14.25.044	25,0	12,5	44	53,0	12,7	5,3	7,4	673	14,3	6,9	7,4	758	18,4	13,3	5,1	975	23,0	21,0	1219,0
241.14.25.051	25,0	12,5	51	44,1	13,8	5,8	8,0	609	15,5	7,5	8,0	684	20,0	14,5	5,5	882	25,0	26,0	1102,5
241.14.25.064	25,0	12,5	64	35,2	17,1	7,1	10,0	602	19,2	9,3	9,9	676	24,8	18,0	6,8	873	31,0	33,0	1091,2
241.14.25.076	25,0	12,5	76	28,1	21,5	9,0	12,5	604	24,2	11,7	12,5	680	31,2	22,6	8,6	877	39,0	37,0	1095,9
241.14.25.089	25,0	12,5	89	24,0	25,3	10,6	14,7	607	28,5	13,8	14,7	684	36,8	26,7	10,1	883	46,0	43,0	1104,0
241.14.25.102	25,0	12,5	102	21,1	28,6	12,0	16,6	603	32,2	15,6	16,6	679	41,6	30,2	11,4	878	52,0	50,0	1097,2
241.14.25.115	25,0	12,5	115	18,7	32,5	13,6	18,9	608	36,6	17,7	18,9	684	47,2	34,2	13,0	883	59,0	56,0	1103,3
241.14.25.127	25,0	12,5	127	16,7	36,3	15,2	21,1	606	40,9	19,8	21,1	683	52,8	38,3	14,5	882	66,0	61,0	1102,2
241.14.25.139	25,0	12,5	139	15,3	40,7	17,0	23,7	623	45,9	22,2	23,7	702	59,2	42,9	16,3	906	74,0	65,0	1132,2
241.14.25.152	25,0	12,5	152	14,0	44,0	18,4	25,6	616	49,6	24,0	25,6	694	64,0	46,4	17,6	896	80,0	72,0	1120,0
241.14.25.178	25,0	12,5	178	12,6	51,2	21,4	29,8	645	57,7	27,9	29,8	727	74,4	53,9	20,5	937	93,0	85,0	1171,8
241.14.25.203	25,0	12,5	203	10,4	58,9	24,6	34,3	613	66,3	32,1	34,2	690	85,6	62,1	23,5	890	107,0	96,0	1112,8
241.14.25.305	25,0	12,5	305	7,0	88,0	36,8	51,2	616	99,2	48,0	51,2	694	128,0	92,8	35,2	896	160,0	145,0	1120,0

subject to alterations

High Performance Compression Springs
DIN ISO 10243

FIBRO

D_h = dia. of guide sleeve

D_d = diameter of guide pin

L_0 = free length of spring

$L_1...L_n$ = length of loaded spring (mm) as related to spring forces $F_1...F_n$

L_{BL} = length of compacted-spring (i.e. wire-to-wire)

$F_1...F_n$ = forces (N) as related to length of spring $L_1...L_n$

$S_{v1}...S_{v7}$ = recommend. preload. compression, as relat. to compress. $S_1...S_7$

$S_1...S_n$ = compr. as related to spring forces $F_1...F_n$

R = spring rate (N/mm)

$S_{A1}...S_{A7}$ = working stroke (mm)

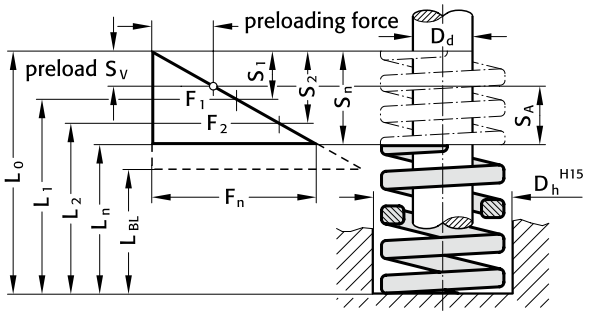



241.15. High Performance Compression Springs DIN ISO 10243 Colour: „Blue“

					30% stroke				40% stroke				45% stroke				50% stroke			
Order No	D_h	D_d	L_0	R	S_1	S_{v1}	S_{A1}	F_1	S_2	S_{v2}	S_{A2}	F_2	S_3	S_{v3}	S_{A3}	F_3	S_4	S_{v4}	S_{A4}	F_4
241.15.25.025	25,0	12,5	25	147,0	3,3	1,4	1,9	485	4,4	1,4	3,0	647	5,0	1,4	3,6	735	5,5	2,0	3,5	809
241.15.25.032	25,0	12,5	32	118,1	3,9	1,7	2,2	461	5,2	1,7	3,5	614	5,9	1,7	4,2	697	6,5	2,3	4,2	768
241.15.25.038	25,0	12,5	38	93,1	4,8	2,1	2,7	447	6,4	2,1	4,3	596	7,2	2,1	5,1	670	8,0	2,9	5,1	745
241.15.25.044	25,0	12,5	44	80,8	5,7	2,5	3,2	461	7,6	2,5	5,1	614	8,6	2,5	6,1	695	9,5	3,4	6,1	768
241.15.25.051	25,0	12,5	51	68,7	6,3	2,7	3,6	433	8,4	2,7	5,7	577	9,5	2,7	6,8	653	10,5	3,8	6,7	721
241.15.25.064	25,0	12,5	64	53,1	8,1	3,5	4,6	430	10,8	3,5	7,3	573	12,2	3,5	8,7	648	13,5	4,9	8,6	717
241.15.25.076	25,0	12,5	76	43,3	9,9	4,3	5,6	429	13,2	4,3	8,9	572	14,9	4,3	10,6	645	16,5	5,9	10,6	714
241.15.25.089	25,0	12,5	89	38,3	11,7	5,1	6,6	448	15,6	5,1	10,5	597	17,6	5,1	12,5	674	19,5	7,0	12,5	747
241.15.25.102	25,0	12,5	102	33,1	13,2	5,7	7,5	437	17,6	5,7	11,9	583	19,8	5,7	14,1	655	22,0	7,9	14,1	728
241.15.25.115	25,0	12,5	115	28,1	15,0	6,5	8,5	422	20,0	6,5	13,5	562	22,5	6,5	16,0	632	25,0	9,0	16,0	703
241.15.25.127	25,0	12,5	127	25,9	16,8	7,3	9,5	435	22,4	7,3	15,1	580	25,2	7,3	17,9	653	28,0	10,1	17,9	725
241.15.25.139	25,0	12,5	139	23,3	18,9	8,2	10,7	440	25,2	8,2	17,0	587	28,4	8,2	20,2	662	31,5	11,3	20,2	734
241.15.25.152	25,0	12,5	152	20,8	20,1	8,7	11,4	418	26,8	8,7	18,1	557	30,2	8,7	21,5	628	33,5	12,1	21,4	697
241.15.25.178	25,0	12,5	178	17,9	23,7	10,3	13,4	424	31,6	10,3	21,3	566	35,6	10,3	25,3	637	39,5	14,2	25,3	707
241.15.25.203	25,0	12,5	203	15,8	27,0	11,7	15,3	427	36,0	11,7	24,3	569	40,5	11,7	28,8	640	45,0	16,2	28,8	711
241.15.25.305	25,0	12,5	305	10,2	40,5	17,6	22,9	413	54,0	17,6	36,4	551	60,8	17,6	43,2	620	67,5	24,3	43,2	689

					55% stroke				62% stroke				80% stroke				100% stroke		
Order No	D_h	D_d	L_0	R	S_5	S_{v5}	S_{A5}	F_5	S_6	S_{v6}	S_{A6}	F_6	S_7	S_{v7}	S_{A7}	F_7	S_n	L_n	F_n
241.15.25.025	25,0	12,5	25	147,0	6,1	2,5	3,6	897	6,8	3,3	3,5	1000	8,8	6,4	2,4	1294	11,0	14,0	1617,0
241.15.25.032	25,0	12,5	32	118,1	7,2	3,0	4,2	850	8,1	3,9	4,2	957	10,4	7,5	2,9	1228	13,0	19,0	1535,3
241.15.25.038	25,0	12,5	38	93,1	8,8	3,7	5,1	819	9,9	4,8	5,1	922	12,8	9,3	3,5	1192	16,0	22,0	1489,6
241.15.25.044	25,0	12,5	44	80,8	10,5	4,4	6,1	848	11,8	5,7	6,1	953	15,2	11,0	4,2	1228	19,0	25,0	1535,2
241.15.25.051	25,0	12,5	51	68,7	11,6	4,8	6,8	797	13,0	6,3	6,7	893	16,8	12,2	4,6	1154	21,0	30,0	1442,7
241.15.25.064	25,0	12,5	64	53,1	14,9	6,2	8,7	791	16,7	8,1	8,6	887	21,6	15,7	5,9	1147	27,0	37,0	1433,7
241.15.25.076	25,0	12,5	76	43,3	18,2	7,6	10,6	788	20,5	9,9	10,6	888	26,4	19,1	7,3	1143	33,0	43,0	1428,9
241.15.25.089	25,0	12,5	89	38,3	21,5	9,0	12,5	823	24,2	11,7	12,5	927	31,2	22,6	8,6	1195	39,0	50,0	1493,7
241.15.25.102	25,0	12,5	102	33,1	24,2	10,1	14,1	801	27,3	13,2	14,1	904	35,2	25,5	9,7	1165	44,0	58,0	1456,4
241.15.25.115	25,0	12,5	115	28,1	27,5	11,5	16,0	773	31,0	15,0	16,0	871	40,0	29,0	11,0	1124	50,0	65,0	1405,0
241.15.25.127	25,0	12,5	127	25,9	30,8	12,9	17,9	798	34,7	16,8	17,9	899	44,8	32,5	12,3	1160	56,0	71,0	1450,4
241.15.25.139	25,0	12,5	139	23,3	34,7	14,5	20,2	809	39,1	18,9	20,2	911	50,4	36,5	13,9	1174	63,0	76,0	1467,9
241.15.25.152	25,0	12,5	152	20,8	36,9	15,4	21,5	768	41,5	20,1	21,4	863	53,6	38,9	14,7	1115	67,0	85,0	1393,6
241.15.25.178	25,0	12,5	178	17,9	43,5	18,2	25,3	779	49,0	23,7	25,3	877	63,2	45,8	17,4	1131	79,0	99,0	1414,1
241.15.25.203	25,0	12,5	203	15,8	49,5	20,7	28,8	782	55,8	27,0	28,8	882	72,0	52,2	19,8	1138	90,0	113,0	1422,0
241.15.25.305	25,0	12,5	305	10,2	74,3	31,1	43,2	758	83,7	40,5	43,2	854	108,0	78,3	29,7	1102	135,0	170,0	1377,0

High Performance Compression Springs
DIN ISO 10243



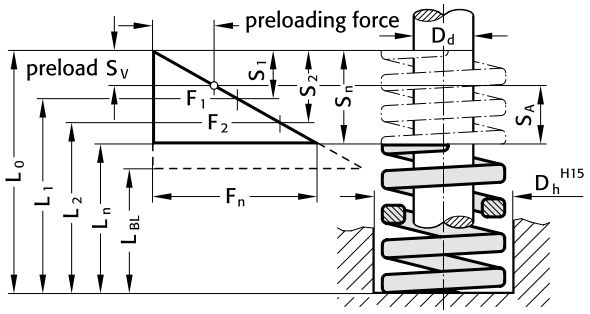

D_h	=	dia. of guide sleeve
D_d	=	diameter of guide pin
L_0	=	free length of spring
$L_1...L_n$	=	length of loaded spring (mm) as related to spring forces $F_1...F_n$
L_{BL}	=	length of compacted-spring (i.e. wire-to-wire)
$F_1...F_n$	=	forces (N) as related to length of spring $L_1...L_n$
$S_{v1}...S_{v7}$	=	recommend. preload. compression, as relat. to compress. $S_1...S_7$
$S_1...S_n$	=	compr. as related to spring forces $F_1...F_n$
R	=	spring rate (N/mm)
$S_{A1}...S_{A7}$	=	working stroke (mm)

241.16. High Performance Compression Springs DIN ISO 10243 Colour: „Red“

					30% Stroke				40% Stroke				45% Stroke				50% Stroke			
Order No	D_h	D_d	L_0	R	S_1	S_{v1}	S_{A1}	F_1	S_2	S_{v2}	S_{A2}	F_2	S_3	S_{v3}	S_{A3}	F_3	S_4	S_{v4}	S_{A4}	F_4
241.16.25.025	25,0	12,5	25	375,7	2,7	1,2	1,5	1014	3,6	1,2	2,4	1353	4,1	1,2	2,9	1540	4,5	1,6	2,9	1691
241.16.25.032	25,0	12,5	32	297,2	3,2	1,4	1,8	951	4,2	1,4	2,8	1248	4,7	1,4	3,3	1397	5,3	1,9	3,4	1575
241.16.25.038	25,0	12,5	38	218,8	3,9	1,7	2,2	853	5,2	1,7	3,5	1138	5,9	1,7	4,2	1291	6,5	2,3	4,2	1422
241.16.25.044	25,0	12,5	44	187,4	4,7	2,0	2,7	881	6,2	2,0	4,2	1162	7,0	2,0	5,0	1312	7,8	2,8	5,0	1462
241.16.25.051	25,0	12,5	51	156,0	5,4	2,3	3,1	842	7,2	2,3	4,9	1123	8,1	2,3	5,8	1264	9,0	3,2	5,8	1404
241.16.25.064	25,0	12,5	64	123,6	6,8	2,9	3,9	840	9,0	2,9	6,1	1112	10,1	2,9	7,2	1248	11,3	4,1	7,2	1397
241.16.25.076	25,0	12,5	76	99,1	8,3	3,6	4,7	823	11,0	3,6	7,4	1090	12,4	3,6	8,8	1229	13,8	5,0	8,8	1368
241.16.25.089	25,0	12,5	89	84,4	9,8	4,2	5,6	827	13,0	4,2	8,8	1097	14,6	4,2	10,4	1232	16,3	5,9	10,4	1376
241.16.25.102	25,0	12,5	102	73,6	11,3	4,9	6,4	832	15,0	4,9	10,1	1104	16,9	4,9	12,0	1244	18,8	6,8	12,0	1384
241.16.25.115	25,0	12,5	115	64,7	12,8	5,6	7,2	828	17,1	5,6	11,5	1106	19,2	5,6	13,6	1242	21,4	7,7	13,7	1385
241.16.25.127	25,0	12,5	127	57,9	14,1	6,1	8,0	816	18,8	6,1	12,7	1089	21,2	6,1	15,1	1227	23,5	8,5	15,0	1361
241.16.25.139	25,0	12,5	139	53,0	15,6	6,8	8,8	827	20,8	6,8	14,0	1102	23,4	6,8	16,6	1240	26,0	9,4	16,6	1378
241.16.25.152	25,0	12,5	152	48,1	17,3	7,5	9,8	832	23,0	7,5	15,5	1106	25,9	7,5	18,4	1246	28,8	10,4	18,4	1385
241.16.25.178	25,0	12,5	178	41,2	20,4	8,8	11,6	840	27,2	8,8	18,4	1121	30,6	8,8	21,8	1261	34,0	12,2	21,8	1401
241.16.25.203	25,0	12,5	203	36,3	23,1	10,0	13,1	839	30,8	10,0	20,8	1118	34,7	10,0	24,7	1260	38,5	13,9	24,6	1398
241.16.25.305	25,0	12,5	305	22,6	34,5	15,0	19,5	780	46,0	15,0	31,0	1040	51,8	15,0	36,8	1171	57,5	20,7	36,8	1300

					55% Stroke				62% Stroke				80% Stroke				100% Stroke		
Order No	D_h	D_d	L_0	R	S_5	S_{v5}	S_{A5}	F_5	S_6	S_{v6}	S_{A6}	F_6	S_7	S_{v7}	S_{A7}	F_7	S_n	L_n	F_n
241.16.25.025	25,0	12,5	25	375,7	5,0	2,1	2,9	1879	5,6	2,7	2,9	2104	7,2	5,2	2,0	2705	9,0	16,0	3381,3
241.16.25.032	25,0	12,5	32	297,2	5,8	2,4	3,4	1724	6,5	3,2	3,3	1932	8,4	6,1	2,3	2496	10,5	21,5	3120,6
241.16.25.038	25,0	12,5	38	218,8	7,2	3,0	4,2	1575	8,1	3,9	4,2	1772	10,4	7,5	2,9	2276	13,0	25,0	2844,4
241.16.25.044	25,0	12,5	44	187,4	8,5	3,6	4,9	1593	9,6	4,7	4,9	1799	12,4	9,0	3,4	2324	15,5	28,5	2904,7
241.16.25.051	25,0	12,5	51	156,0	9,9	4,1	5,8	1544	11,2	5,4	5,8	1747	14,4	10,4	4,0	2246	18,0	33,0	2808,0
241.16.25.064	25,0	12,5	64	123,6	12,4	5,2	7,2	1533	14,0	6,8	7,2	1730	18,0	13,1	4,9	2225	22,5	41,5	2781,0
241.16.25.076	25,0	12,5	76	99,1	15,1	6,3	8,8	1496	17,1	8,3	8,8	1695	22,0	16,0	6,0	2180	27,5	48,5	2725,3
241.16.25.089	25,0	12,5	89	84,4	17,9	7,5	10,4	1511	20,2	9,8	10,4	1705	26,0	18,9	7,1	2194	32,5	56,5	2743,0
241.16.25.102	25,0	12,5	102	73,6	20,6	8,6	12,0	1516	23,3	11,3	12,0	1715	30,0	21,8	8,2	2208	37,5	64,5	2760,0
241.16.25.115	25,0	12,5	115	64,7	23,5	9,8	13,7	1520	26,5	12,8	13,7	1715	34,2	24,8	9,4	2213	42,7	72,3	2762,7
241.16.25.127	25,0	12,5	127	57,9	25,9	10,8	15,1	1500	29,1	14,1	15,0	1685	37,6	27,3	10,3	2177	47,0	80,0	2721,3
241.16.25.139	25,0	12,5	139	53,0	28,6	12,0	16,6	1516	32,2	15,6	16,6	1707	41,6	30,2	11,4	2205	52,0	87,0	2756,0
241.16.25.152	25,0	12,5	152	48,1	31,6	13,2	18,4	1520	35,7	17,3	18,4	1717	46,0	33,4	12,6	2213	57,5	94,5	2765,8
241.16.25.178	25,0	12,5	178	41,2	37,4	15,6	21,8	1541	42,2	20,4	21,8	1739	54,4	39,4	15,0	2241	68,0	110,0	2801,6
241.16.25.203	25,0	12,5	203	36,3	42,4	17,7	24,7	1539	47,7	23,1	24,6	1732	61,6	44,7	16,9	2236	77,0	126,0	2795,1
241.16.25.305	25,0	12,5	305	22,6	63,3	26,5	36,8	1431	71,3	34,5	36,8	1611	92,0	66,7	25,3	2079	115,0	190,0	2599,0

subject to alterations

High Performance Compression Springs
DIN ISO 10243

FIBRO

D_h = dia. of guide sleeve
D_d = diameter of guide pin
L_0 = free length of spring
$L_1...L_n$ = length of loaded spring (mm) as related to spring forces $F_1...F_n$
L_{BL} = length of compacted-spring (i.e. wire-to-wire)
$F_1...F_n$ = forces (N) as related to length of spring $L_1...L_n$
$S_{v1}...S_{v7}$ = recommend. preload. compression, as relat. to compress. $S_1...S_7$
$S_1...S_n$ = compr. as related to spring forces $F_1...F_n$
R = spring rate (N/mm)
$S_{A1}...S_{A7}$ = working stroke (mm)

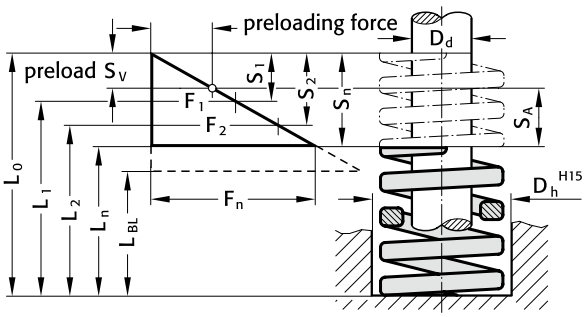



241.17. High Performance Compression Springs DIN ISO 10243 Colour: „Yellow“

					30% stroke				40% stroke				45% stroke				50% stroke			
Order No	D_h	D_d	L_0	R	S_1	S_{v1}	S_{A1}	F_1	S_2	S_{v2}	S_{A2}	F_2	S_3	S_{v3}	S_{A3}	F_3	S_4	S_{v4}	S_{A4}	F_4
241.17.25.032	25,0	12,5	32	375	3,0	1,3	1,7	1125	4,0	1,3	2,7	1500	4,5	1,3	3,2	1688	5,0	1,8	3,2	1875
241.17.25.038	25,0	12,5	38	346	3,6	1,6	2,0	1246	4,8	1,6	3,2	1661	5,4	1,6	3,8	1868	6,0	2,2	3,8	2076
241.17.25.044	25,0	12,5	44	244	4,2	1,8	2,4	1025	5,6	1,8	3,8	1366	6,3	1,8	4,5	1537	7,0	2,5	4,5	1708
241.17.25.051	25,0	12,5	51	208	4,8	2,1	2,7	998	6,4	2,1	4,3	1331	7,2	2,1	5,1	1498	8,0	2,9	5,1	1664
241.17.25.064	25,0	12,5	64	161	6,3	2,7	3,6	1014	8,4	2,7	5,7	1352	9,5	2,7	6,8	1530	10,5	3,8	6,7	1691
241.17.25.076	25,0	12,5	76	131	7,5	3,3	4,2	983	10,0	3,3	6,7	1310	11,3	3,3	8,0	1480	12,5	4,5	8,0	1638
241.17.25.089	25,0	12,5	89	111	8,7	3,8	4,9	966	11,6	3,8	7,8	1288	13,1	3,8	9,3	1454	14,5	5,2	9,3	1610
241.17.25.102	25,0	12,5	102	96,3	10,2	4,4	5,8	982	13,6	4,4	9,2	1310	15,3	4,4	10,9	1473	17,0	6,1	10,9	1637
241.17.25.115	25,0	12,5	115	85,7	11,7	5,1	6,6	1003	15,6	5,1	10,5	1337	17,6	5,1	12,5	1508	19,5	7,0	12,5	1671
241.17.25.127	25,0	12,5	127	76,3	12,9	5,6	7,3	984	17,2	5,6	11,6	1312	19,4	5,6	13,8	1480	21,5	7,7	13,8	1640
241.17.25.152	25,0	12,5	152	63,6	15,9	6,9	9,0	1011	21,2	6,9	14,3	1348	23,9	6,9	17,0	1520	26,5	9,5	17,0	1685
241.17.25.178	25,0	12,5	178	54,0	18,6	8,1	10,5	1004	24,8	8,1	16,7	1339	27,9	8,1	19,8	1507	31,0	11,2	19,8	1674
241.17.25.203	25,0	12,5	203	47,0	21,0	9,1	11,9	987	28,0	9,1	18,9	1316	31,5	9,1	22,4	1481	35,0	12,6	22,4	1645
241.17.25.305	25,0	12,5	305	30,9	32,4	14,0	18,4	1001	43,2	14,0	29,2	1335	48,6	14,0	34,6	1502	54,0	19,4	34,6	1669

					55% stroke				62% stroke				80% stroke				100% stroke		
Order No	D_h	D_d	L_0	R	S_5	S_{v5}	S_{A5}	F_5	S_6	S_{v6}	S_{A6}	F_6	S_7	S_{v7}	S_{A7}	F_7	S_n	L_n	F_n
241.17.25.032	25,0	12,5	32	375	5,5	2,3	3,2	2063	6,2	3,0	3,2	2325	8,0	5,8	2,2	3000	10,0	22,0	3750,0
241.17.25.038	25,0	12,5	38	346	6,6	2,8	3,8	2284	7,4	3,6	3,8	2560	9,6	7,0	2,6	3322	12,0	26,0	4152,0
241.17.25.044	25,0	12,5	44	244	7,7	3,2	4,5	1879	8,7	4,2	4,5	2123	11,2	8,1	3,1	2733	14,0	30,0	3416,0
241.17.25.051	25,0	12,5	51	208	8,8	3,7	5,1	1830	9,9	4,8	5,1	2059	12,8	9,3	3,5	2662	16,0	35,0	3328,0
241.17.25.064	25,0	12,5	64	161	11,6	4,8	6,8	1868	13,0	6,3	6,7	2093	16,8	12,2	4,6	2705	21,0	43,0	3381,0
241.17.25.076	25,0	12,5	76	131	13,8	5,8	8,0	1808	15,5	7,5	8,0	2031	20,0	14,5	5,5	2620	25,0	51,0	3275,0
241.17.25.089	25,0	12,5	89	111	16,0	6,7	9,3	1776	18,0	8,7	9,3	1998	23,2	16,8	6,4	2575	29,0	60,0	3219,0
241.17.25.102	25,0	12,5	102	96,3	18,7	7,8	10,9	1801	21,1	10,2	10,9	2032	27,2	19,7	7,5	2619	34,0	68,0	3274,2
241.17.25.115	25,0	12,5	115	85,7	21,5	9,0	12,5	1843	24,2	11,7	12,5	2074	31,2	22,6	8,6	2674	39,0	76,0	3342,3
241.17.25.127	25,0	12,5	127	76,3	23,7	9,9	13,8	1808	26,7	12,9	13,8	2037	34,4	24,9	9,5	2625	43,0	84,0	3280,9
241.17.25.152	25,0	12,5	152	63,6	29,2	12,2	17,0	1857	32,9	15,9	17,0	2092	42,4	30,7	11,7	2697	53,0	99,0	3370,8
241.17.25.178	25,0	12,5	178	54,0	34,1	14,3	19,8	1841	38,4	18,6	19,8	2074	49,6	36,0	13,6	2678	62,0	116,0	3348,0
241.17.25.203	25,0	12,5	203	47,0	38,5	16,1	22,4	1810	43,4	21,0	22,4	2040	56,0	40,6	15,4	2632	70,0	133,0	3290,0
241.17.25.305	25,0	12,5	305	30,9	59,4	24,8	34,6	1835	67,0	32,4	34,6	2070	86,4	62,6	23,8	2670	108,0	197,0	3337,2

High Performance Compression Springs
DIN ISO 10243



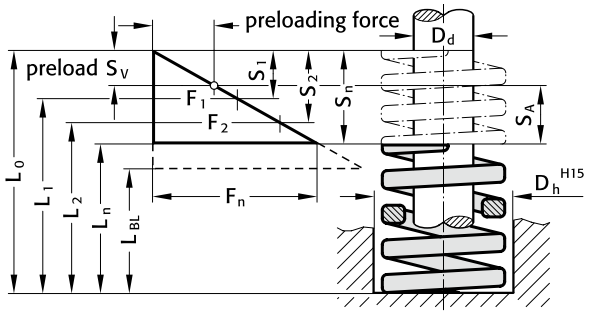

D_h = dia. of guide sleeve
D_d = diameter of guide pin
L_0 = free length of spring
$L_1...L_n$ = length of loaded spring (mm) as related to spring forces $F_1...F_n$
L_{BL} = length of compacted-spring (i.e. wire-to-wire)
$F_1...F_n$ = forces (N) as related to length of spring $L_1...L_n$
$S_{v1}...S_{v7}$ = recommend. preload. compression, as relat. to compress. $S_1...S_7$
$S_1...S_n$ = compr. as related to spring forces $F_1...F_n$
R = spring rate (N/mm)
$S_{A1}...S_{A7}$ = working stroke (mm)

241.14. High Performance Compression Springs DIN ISO 10243 Colour: „Green“

					30% stroke				40% stroke				45% stroke				50% stroke			
Order No	D_h	D_d	L_0	R	S_1	S_{v1}	S_{A1}	F_1	S_2	S_{v2}	S_{A2}	F_2	S_3	S_{v3}	S_{A3}	F_3	S_4	S_{v4}	S_{A4}	F_4
241.14.32.038	32,0	16,0	38	94,1	5,7	2,5	3,2	536	7,6	2,5	5,1	715	8,6	2,5	6,1	809	9,5	3,4	6,1	894
241.14.32.044	32,0	16,0	44	79,6	6,6	2,9	3,7	525	8,8	2,9	5,9	700	9,9	2,9	7,0	788	11,0	4,0	7,0	876
241.14.32.051	32,0	16,0	51	67,0	7,5	3,3	4,2	503	10,0	3,3	6,7	670	11,3	3,3	8,0	757	12,5	4,5	8,0	838
241.14.32.064	32,0	16,0	64	53,0	9,6	4,2	5,4	509	12,8	4,2	8,6	678	14,4	4,2	10,2	763	16,0	5,8	10,2	848
241.14.32.076	32,0	16,0	76	44,1	11,7	5,1	6,6	516	15,6	5,1	10,5	688	17,6	5,1	12,5	776	19,5	7,0	12,5	860
241.14.32.089	32,0	16,0	89	37,2	13,5	5,9	7,6	502	18,0	5,9	12,1	670	20,3	5,9	14,4	755	22,5	8,1	14,4	837
241.14.32.102	32,0	16,0	102	32,0	15,6	6,8	8,8	499	20,8	6,8	14,0	666	23,4	6,8	16,6	749	26,0	9,4	16,6	832
241.14.32.115	32,0	16,0	115	29,0	17,4	7,5	9,9	505	23,2	7,5	15,7	673	26,1	7,5	18,6	757	29,0	10,4	18,6	841
241.14.32.127	32,0	16,0	127	25,0	19,5	8,5	11,0	488	26,0	8,5	17,5	650	29,3	8,5	20,8	733	32,5	11,7	20,8	813
241.14.32.139	32,0	16,0	139	23,1	21,6	9,4	12,2	499	28,8	9,4	19,4	665	32,4	9,4	23,0	748	36,0	13,0	23,0	832
241.14.32.152	32,0	16,0	152	21,5	23,4	10,1	13,3	503	31,2	10,1	21,1	671	35,1	10,1	25,0	755	39,0	14,0	25,0	839
241.14.32.178	32,0	16,0	178	18,3	26,4	11,4	15,0	483	35,2	11,4	23,8	644	39,6	11,4	28,2	725	44,0	15,8	28,2	805
241.14.32.203	32,0	16,0	203	15,8	31,2	13,5	17,7	493	41,6	13,5	28,1	657	46,8	13,5	33,3	739	52,0	18,7	33,3	822
241.14.32.254	32,0	16,0	254	12,6	39,0	16,9	22,1	491	52,0	16,9	35,1	655	58,5	16,9	41,6	737	65,0	23,4	41,6	819
241.14.32.305	32,0	16,0	305	10,3	46,5	20,2	26,3	479	62,0	20,2	41,8	639	69,8	20,2	49,6	719	77,5	27,9	49,6	798

					55% stroke				62% stroke				80% stroke				100% stroke		
Order No	D_h	D_d	L_0	R	S_5	S_{v5}	S_{A5}	F_5	S_6	S_{v6}	S_{A6}	F_6	S_7	S_{v7}	S_{A7}	F_7	S_n	L_n	F_n
241.14.32.038	32,0	16,0	38	94,1	10,5	4,4	6,1	988	11,8	5,7	6,1	1110	15,2	11,0	4,2	1430	19,0	19,0	1787,9
241.14.32.044	32,0	16,0	44	79,6	12,1	5,1	7,0	963	13,6	6,6	7,0	1083	17,6	12,8	4,8	1401	22,0	22,0	1751,2
241.14.32.051	32,0	16,0	51	67,0	13,8	5,8	8,0	925	15,5	7,5	8,0	1039	20,0	14,5	5,5	1340	25,0	26,0	1675,0
241.14.32.064	32,0	16,0	64	53,0	17,6	7,4	10,2	933	19,8	9,6	10,2	1049	25,6	18,6	7,0	1357	32,0	32,0	1696,0
241.14.32.076	32,0	16,0	76	44,1	21,5	9,0	12,5	948	24,2	11,7	12,5	1067	31,2	22,6	8,6	1376	39,0	37,0	1719,9
241.14.32.089	32,0	16,0	89	37,2	24,8	10,4	14,4	923	27,9	13,5	14,4	1038	36,0	26,1	9,9	1339	45,0	44,0	1674,0
241.14.32.102	32,0	16,0	102	32,0	28,6	12,0	16,6	915	32,2	15,6	16,6	1030	41,6	30,2	11,4	1331	52,0	50,0	1664,0
241.14.32.115	32,0	16,0	115	29,0	31,9	13,3	18,6	925	36,0	17,4	18,6	1044	46,4	33,6	12,8	1346	58,0	57,0	1682,0
241.14.32.127	32,0	16,0	127	25,0	35,8	15,0	20,8	895	40,3	19,5	20,8	1008	52,0	37,7	14,3	1300	65,0	62,0	1625,0
241.14.32.139	32,0	16,0	139	23,1	39,6	16,6	23,0	915	44,6	21,6	23,0	1030	57,6	41,8	15,8	1331	72,0	67,0	1663,2
241.14.32.152	32,0	16,0	152	21,5	42,9	17,9	25,0	922	48,4	23,4	25,0	1041	62,4	45,2	17,2	1342	78,0	74,0	1677,0
241.14.32.178	32,0	16,0	178	18,3	48,4	20,2	28,2	886	54,6	26,4	28,2	999	70,4	51,0	19,4	1288	88,0	90,0	1610,4
241.14.32.203	32,0	16,0	203	15,8	57,2	23,9	33,3	904	64,5	31,2	33,3	1019	83,2	60,3	22,9	1315	104,0	99,0	1643,2
241.14.32.254	32,0	16,0	254	12,6	71,5	29,9	41,6	901	80,6	39,0	41,6	1016	104,0	75,4	28,6	1310	130,0	124,0	1638,0
241.14.32.305	32,0	16,0	305	10,3	85,3	35,7	49,6	879	96,1	46,5	49,6	990	124,0	89,9	34,1	1277	155,0	150,0	1596,5

subject to alterations

High Performance Compression Springs
DIN ISO 10243

D_h = dia. of guide sleeve

D_d = diameter of guide pin

L_0 = free length of spring

$L_1...L_n$ = length of loaded spring (mm) as related to spring forces $F_1...F_n$

L_{BL} = length of compacted-spring (i.e. wire-to-wire)

$F_1...F_n$ = forces (N) as related to length of spring $L_1...L_n$

$S_{v1}...S_{v7}$ = recommend. preload. compression, as relat. to compress. $S_1...S_7$

$S_1...S_n$ = compr. as related to spring forces $F_1...F_n$

R = spring rate (N/mm)

$S_{A1}...S_{A7}$ = working stroke (mm)

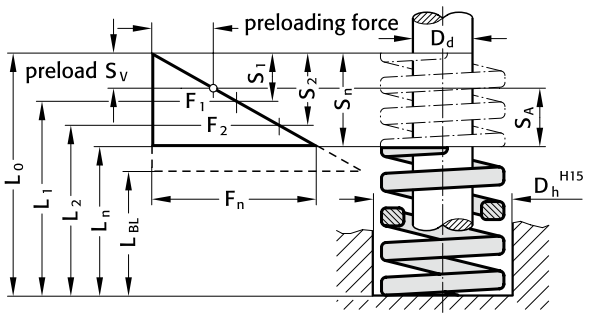



241.15. High Performance Compression Springs DIN ISO 10243 Colour: „Blue“

					30% stroke				40% stroke				45% stroke				50% stroke			
Order No	D_h	D_d	L_0	R	S_1	S_{v1}	S_{A1}	F_1	S_2	S_{v2}	S_{A2}	F_2	S_3	S_{v3}	S_{A3}	F_3	S_4	S_{v4}	S_{A4}	F_4
241.15.32.038	32,0	16,0	38	185,1	4,8	2,1	2,7	888	6,4	2,1	4,3	1185	7,2	2,1	5,1	1333	8,0	2,9	5,1	1481
241.15.32.044	32,0	16,0	44	158,1	5,7	2,5	3,2	901	7,6	2,5	5,1	1202	8,6	2,5	6,1	1360	9,5	3,4	6,1	1502
241.15.32.051	32,0	16,0	51	134,1	6,3	2,7	3,6	845	8,4	2,7	5,7	1126	9,5	2,7	6,8	1274	10,5	3,8	6,7	1408
241.15.32.064	32,0	16,0	64	99,1	8,1	3,5	4,6	803	10,8	3,5	7,3	1070	12,2	3,5	8,7	1209	13,5	4,9	8,6	1338
241.15.32.076	32,0	16,0	76	80,5	9,6	4,2	5,4	773	12,8	4,2	8,6	1030	14,4	4,2	10,2	1159	16,0	5,8	10,2	1288
241.15.32.089	32,0	16,0	89	69,2	11,1	4,8	6,3	768	14,8	4,8	10,0	1024	16,7	4,8	11,9	1156	18,5	6,7	11,8	1280
241.15.32.102	32,0	16,0	102	58,9	12,9	5,6	7,3	760	17,2	5,6	11,6	1013	19,4	5,6	13,8	1143	21,5	7,7	13,8	1266
241.15.32.115	32,0	16,0	115	51,5	14,7	6,4	8,3	757	19,6	6,4	13,2	1009	22,1	6,4	15,7	1138	24,5	8,8	15,7	1262
241.15.32.127	32,0	16,0	127	44,8	16,5	7,2	9,3	739	22,0	7,2	14,8	986	24,8	7,2	17,6	1111	27,5	9,9	17,6	1232
241.15.32.139	32,0	16,0	139	42,3	18,0	7,8	10,2	761	24,0	7,8	16,2	1015	27,0	7,8	19,2	1142	30,0	10,8	19,2	1269
241.15.32.152	32,0	16,0	152	37,9	19,8	8,6	11,2	750	26,4	8,6	17,8	1001	29,7	8,6	21,1	1126	33,0	11,9	21,1	1251
241.15.32.178	32,0	16,0	178	32,6	23,1	10,0	13,1	753	30,8	10,0	20,8	1004	34,7	10,0	24,7	1131	38,5	13,9	24,6	1255
241.15.32.203	32,0	16,0	203	28,9	26,4	11,4	15,0	763	35,2	11,4	23,8	1017	39,6	11,4	28,2	1144	44,0	15,8	28,2	1272
241.15.32.254	32,0	16,0	254	21,4	33,0	14,3	18,7	706	44,0	14,3	29,7	942	49,5	14,3	35,2	1059	55,0	19,8	35,2	1177
241.15.32.305	32,0	16,0	305	18,3	39,9	17,3	22,6	730	53,2	17,3	35,9	974	59,9	17,3	42,6	1096	66,5	23,9	42,6	1217

					55% stroke				62% stroke				80% stroke				100% stroke		
Order No	D_h	D_d	L_0	R	S_5	S_{v5}	S_{A5}	F_5	S_6	S_{v6}	S_{A6}	F_6	S_7	S_{v7}	S_{A7}	F_7	S_n	L_n	F_n
241.15.32.038	32,0	16,0	38	185,1	8,8	3,7	5,1	1629	9,9	4,8	5,1	1832	12,8	9,3	3,5	2369	16,0	22,0	2961,6
241.15.32.044	32,0	16,0	44	158,1	10,5	4,4	6,1	1660	11,8	5,7	6,1	1866	15,2	11,0	4,2	2403	19,0	25,0	3003,9
241.15.32.051	32,0	16,0	51	134,1	11,6	4,8	6,8	1556	13,0	6,3	6,7	1743	16,8	12,2	4,6	2253	21,0	30,0	2816,1
241.15.32.064	32,0	16,0	64	99,1	14,9	6,2	8,7	1477	16,7	8,1	8,6	1655	21,6	15,7	5,9	2141	27,0	37,0	2675,7
241.15.32.076	32,0	16,0	76	80,5	17,6	7,4	10,2	1417	19,8	9,6	10,2	1594	25,6	18,6	7,0	2061	32,0	44,0	2576,0
241.15.32.089	32,0	16,0	89	69,2	20,4	8,5	11,9	1412	22,9	11,1	11,8	1585	29,6	21,5	8,1	2048	37,0	52,0	2560,4
241.15.32.102	32,0	16,0	102	58,9	23,7	9,9	13,8	1396	26,7	12,9	13,8	1573	34,4	24,9	9,5	2026	43,0	59,0	2532,7
241.15.32.115	32,0	16,0	115	51,5	27,0	11,3	15,7	1391	30,4	14,7	15,7	1566	39,2	28,4	10,8	2019	49,0	66,0	2523,5
241.15.32.127	32,0	16,0	127	44,8	30,3	12,7	17,6	1357	34,1	16,5	17,6	1528	44,0	31,9	12,1	1971	55,0	72,0	2464,0
241.15.32.139	32,0	16,0	139	42,3	33,0	13,8	19,2	1396	37,2	18,0	19,2	1574	48,0	34,8	13,2	2030	60,0	79,0	2538,0
241.15.32.152	32,0	16,0	152	37,9	36,3	15,2	21,1	1376	40,9	19,8	21,1	1550	52,8	38,3	14,5	2001	66,0	86,0	2501,4
241.15.32.178	32,0	16,0	178	32,6	42,4	17,7	24,7	1382	47,7	23,1	24,6	1555	61,6	44,7	16,9	2008	77,0	101,0	2510,2
241.15.32.203	32,0	16,0	203	28,9	48,4	20,2	28,2	1399	54,6	26,4	28,2	1578	70,4	51,0	19,4	2035	88,0	115,0	2543,2
241.15.32.254	32,0	16,0	254	21,4	60,5	25,3	35,2	1295	68,2	33,0	35,2	1459	88,0	63,8	24,2	1883	110,0	144,0	2354,0
241.15.32.305	32,0	16,0	305	18,3	73,2	30,6	42,6	1340	82,5	39,9	42,6	1510	106,4	77,1	29,3	1947	133,0	172,0	2433,9

High Performance Compression Springs
DIN ISO 10243



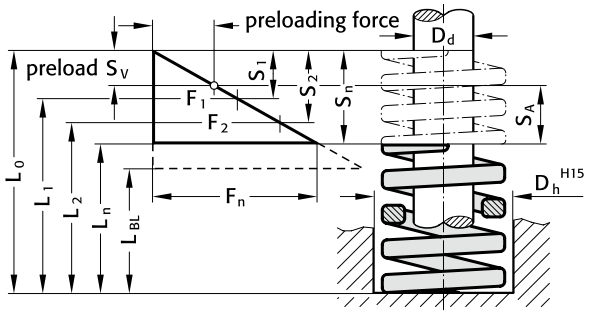

D_h	=	dia. of guide sleeve
D_d	=	diameter of guide pin
L_0	=	free length of spring
$L_1...L_n$	=	length of loaded spring (mm) as related to spring forces $F_1...F_n$
L_{BL}	=	length of compacted-spring (i.e. wire-to-wire)
$F_1...F_n$	=	forces (N) as related to length of spring $L_1...L_n$
$S_{v1}...S_{v7}$	=	recommend. preload. compression, as relat. to compress. $S_1...S_7$
$S_1...S_n$	=	compr. as related to spring forces $F_1...F_n$
R	=	spring rate (N/mm)
$S_{A1}...S_{A7}$	=	working stroke (mm)

241.16. High Performance Compression Springs DIN ISO 10243 Colour: „Red“

					30% Stroke				40% Stroke				45% Stroke				50% Stroke			
Order No	D_h	D_d	L_0	R	S_1	S_{v1}	S_{A1}	F_1	S_2	S_{v2}	S_{A2}	F_2	S_3	S_{v3}	S_{A3}	F_3	S_4	S_{v4}	S_{A4}	F_4
241.16.32.038	32,0	16,0	38	388,5	3,6	1,6	2,0	1399	4,8	1,6	3,2	1865	5,4	1,6	3,8	2098	6,0	2,2	3,8	2331
241.16.32.044	32,0	16,0	44	324,7	4,2	1,8	2,4	1364	5,6	1,8	3,8	1818	6,3	1,8	4,5	2046	7,0	2,5	4,5	2273
241.16.32.051	32,0	16,0	51	271,7	5,0	2,1	2,9	1359	6,6	2,1	4,5	1793	7,4	2,1	5,3	2011	8,3	3,0	5,3	2255
241.16.32.064	32,0	16,0	64	211,9	6,5	2,8	3,7	1377	8,6	2,8	5,8	1822	9,7	2,8	6,9	2055	10,8	3,9	6,9	2289
241.16.32.076	32,0	16,0	76	171,7	7,8	3,4	4,4	1339	10,4	3,4	7,0	1786	11,7	3,4	8,3	2009	13,0	4,7	8,3	2232
241.16.32.089	32,0	16,0	89	141,3	9,2	4,0	5,2	1300	12,2	4,0	8,2	1724	13,7	4,0	9,7	1936	15,3	5,5	9,8	2162
241.16.32.102	32,0	16,0	102	121,6	10,7	4,6	6,1	1301	14,2	4,6	9,6	1727	16,0	4,6	11,4	1946	17,8	6,4	11,4	2164
241.16.32.115	32,0	16,0	115	106,9	12,2	5,3	6,9	1304	16,2	5,3	10,9	1732	18,2	5,3	12,9	1946	20,3	7,3	13,0	2170
241.16.32.127	32,0	16,0	127	93,2	13,5	5,9	7,6	1258	18,0	5,9	12,1	1678	20,3	5,9	14,4	1892	22,5	8,1	14,4	2097
241.16.32.139	32,0	16,0	139	86,3	15,0	6,5	8,5	1295	20,0	6,5	13,5	1726	22,5	6,5	16,0	1942	25,0	9,0	16,0	2158
241.16.32.152	32,0	16,0	152	78,5	16,2	7,0	9,2	1272	21,6	7,0	14,6	1696	24,3	7,0	17,3	1908	27,0	9,7	17,3	2120
241.16.32.178	32,0	16,0	178	67,7	18,9	8,2	10,7	1280	25,2	8,2	17,0	1706	28,4	8,2	20,2	1923	31,5	11,3	20,2	2133
241.16.32.203	32,0	16,0	203	58,9	21,6	9,4	12,2	1272	28,8	9,4	19,4	1696	32,4	9,4	23,0	1908	36,0	13,0	23,0	2120
241.16.32.254	32,0	16,0	254	46,1	27,6	12,0	15,6	1272	36,8	12,0	24,8	1696	41,4	12,0	29,4	1909	46,0	16,6	29,4	2121
241.16.32.305	32,0	16,0	305	38,3	33,0	14,3	18,7	1264	44,0	14,3	29,7	1685	49,5	14,3	35,2	1896	55,0	19,8	35,2	2107

					55% Stroke				62% Stroke				80% Stroke				100% Stroke			
Order No	D_h	D_d	L_0	R	S_5	S_{v5}	S_{A5}	F_5	S_6	S_{v6}	S_{A6}	F_6	S_7	S_{v7}	S_{A7}	F_7	S_n	L_n	F_n	
241.16.32.038	32,0	16,0	38	388,5	6,6	2,8	3,8	2564	7,4	3,6	3,8	2875	9,6	7,0	2,6	3730	12,0	26,0	4662,0	
241.16.32.044	32,0	16,0	44	324,7	7,7	3,2	4,5	2500	8,7	4,2	4,5	2825	11,2	8,1	3,1	3637	14,0	30,0	4545,8	
241.16.32.051	32,0	16,0	51	271,7	9,1	3,8	5,3	2472	10,2	5,0	5,2	2771	13,2	9,6	3,6	3586	16,5	34,5	4483,1	
241.16.32.064	32,0	16,0	64	211,9	11,8	4,9	6,9	2500	13,3	6,5	6,8	2818	17,2	12,5	4,7	3645	21,5	42,5	4555,9	
241.16.32.076	32,0	16,0	76	171,7	14,3	6,0	8,3	2455	16,1	7,8	8,3	2764	20,8	15,1	5,7	3571	26,0	50,0	4464,2	
241.16.32.089	32,0	16,0	89	141,3	16,8	7,0	9,8	2374	18,9	9,2	9,7	2671	24,4	17,7	6,7	3448	30,5	58,5	4309,7	
241.16.32.102	32,0	16,0	102	121,6	19,5	8,2	11,3	2371	22,0	10,7	11,3	2675	28,4	20,6	7,8	3453	35,5	66,5	4316,8	
241.16.32.115	32,0	16,0	115	106,9	22,3	9,3	13,0	2384	25,1	12,2	12,9	2683	32,4	23,5	8,9	3464	40,5	74,5	4329,5	
241.16.32.127	32,0	16,0	127	93,2	24,8	10,4	14,4	2311	27,9	13,5	14,4	2600	36,0	26,1	9,9	3355	45,0	82,0	4194,0	
241.16.32.139	32,0	16,0	139	86,3	27,5	11,5	16,0	2373	31,0	15,0	16,0	2675	40,0	29,0	11,0	3452	50,0	89,0	4315,0	
241.16.32.152	32,0	16,0	152	78,5	29,7	12,4	17,3	2331	33,5	16,2	17,3	2630	43,2	31,3	11,9	3391	54,0	98,0	4239,0	
241.16.32.178	32,0	16,0	178	67,7	34,7	14,5	20,2	2349	39,1	18,9	20,2	2647	50,4	36,5	13,9	3412	63,0	115,0	4265,1	
241.16.32.203	32,0	16,0	203	58,9	39,6	16,6	23,0	2332	44,6	21,6	23,0	2627	57,6	41,8	15,8	3393	72,0	131,0	4240,8	
241.16.32.254	32,0	16,0	254	46,1	50,6	21,2	29,4	2333	57,0	27,6	29,4	2628	73,6	53,4	20,2	3393	92,0	162,0	4241,2	
241.16.32.305	32,0	16,0	305	38,3	60,5	25,3	35,2	2317	68,2	33,0	35,2	2612	88,0	63,8	24,2	3370	110,0	195,0	4213,0	

subject to alterations

High Performance Compression Springs
DIN ISO 10243

FIBRO

D_h = dia. of guide sleeve

D_d = diameter of guide pin

L_0 = free length of spring

$L_1...L_n$ = length of loaded spring (mm) as related to spring forces $F_1...F_n$

L_{BL} = length of compacted-spring (i.e. wire-to-wire)

$F_1...F_n$ = forces (N) as related to length of spring $L_1...L_n$

$S_{v1}...S_{v7}$ = recommend. preload. compression, as relat. to compress. $S_1...S_7$

$S_1...S_n$ = compr. as related to spring forces $F_1...F_n$

R = spring rate (N/mm)

$S_{A1}...S_{A7}$ = working stroke (mm)

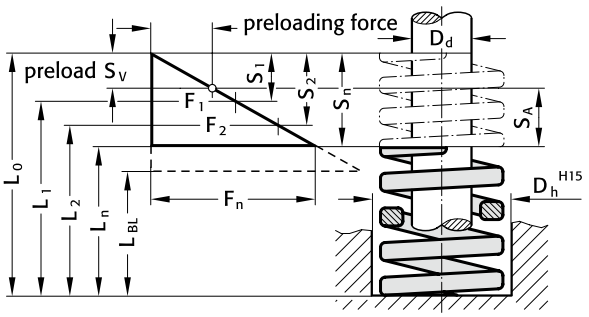



241.17. High Performance Compression Springs DIN ISO 10243 Colour: „Yellow“

					30% stroke				40% stroke				45% stroke				50% stroke			
Order No	D_h	D_d	L_0	R	S_1	S_{v1}	S_{A1}	F_1	S_2	S_{v2}	S_{A2}	F_2	S_3	S_{v3}	S_{A3}	F_3	S_4	S_{v4}	S_{A4}	F_4
241.17.32.038	32,0	16,0	38	529	3,3	1,4	1,9	1746	4,4	1,4	3,0	2328	5,0	1,4	3,6	2645	5,5	2,0	3,5	2910
241.17.32.044	32,0	16,0	44	425	3,9	1,7	2,2	1958	5,2	1,7	3,5	2210	5,9	1,7	4,2	2508	6,5	2,3	4,2	2763
241.17.32.051	32,0	16,0	51	353	4,5	2,0	2,5	1589	6,0	2,0	4,0	2118	6,8	2,0	4,8	2400	7,5	2,7	4,8	2648
241.17.32.064	32,0	16,0	64	269	6,0	2,6	3,4	1614	8,0	2,6	5,4	2152	9,0	2,6	6,4	2421	10,0	3,6	6,4	2690
241.17.32.076	32,0	16,0	76	219	7,2	3,1	4,1	1577	9,6	3,1	6,5	2102	10,8	3,1	7,7	2365	12,0	4,3	7,7	2628
241.17.32.089	32,0	16,0	89	180	8,7	3,8	4,9	1566	11,6	3,8	7,8	2088	13,1	3,8	9,3	2358	14,5	5,2	9,3	2610
241.17.32.102	32,0	16,0	102	155	9,9	4,3	5,6	1535	13,2	4,3	8,9	2046	14,9	4,3	10,6	2310	16,5	5,9	10,6	2558
241.17.32.115	32,0	16,0	115	140	10,8	4,7	6,1	1512	14,4	4,7	9,7	2016	16,2	4,7	11,5	2268	18,0	6,5	11,5	2520
241.17.32.127	32,0	16,0	127	124	12,3	5,3	7,0	1525	16,4	5,3	11,1	2034	18,5	5,3	13,2	2294	20,5	7,4	13,1	2542
241.17.32.152	32,0	16,0	152	102	15,0	6,5	8,5	1530	20,0	6,5	13,5	2040	22,5	6,5	16,0	2295	25,0	9,0	16,0	2550
241.17.32.178	32,0	16,0	178	88,3	17,7	7,7	10,0	1563	23,6	7,8	15,9	2084	26,6	7,7	18,9	2349	29,5	10,6	18,9	2605
241.17.32.203	32,0	16,0	203	76,0	20,4	8,8	11,6	1550	27,2	8,8	18,4	2067	30,6	8,8	21,8	2326	34,0	12,2	21,8	2584
241.17.32.254	32,0	16,0	254	60,8	25,5	11,1	14,4	1550	34,0	11,1	22,9	2067	38,3	11,1	27,2	2329	42,5	15,3	27,2	2584
241.17.32.305	32,0	16,0	305	49,1	30,9	13,4	17,5	1517	41,2	13,4	27,8	2023	46,4	13,4	33,0	2278	51,5	18,5	33,0	2529

					55% stroke				62% stroke				80% stroke				100% stroke		
Order No	D_h	D_d	L_0	R	S_5	S_{v5}	S_{A5}	F_5	S_6	S_{v6}	S_{A6}	F_6	S_7	S_{v7}	S_{A7}	F_7	S_n	L_n	F_n
241.17.32.038	32,0	16,0	38	529	6,1	2,5	3,6	3227	6,8	3,3	3,5	3597	8,8	6,4	2,4	4655	11,0	27,0	5819,0
241.17.32.044	32,0	16,0	44	425	7,2	3,0	4,2	3060	8,1	3,9	4,2	3443	10,4	7,5	2,9	4420	13,0	31,0	5525,0
241.17.32.051	32,0	16,0	51	353	8,3	3,5	4,8	2930	9,3	4,5	4,8	3283	12,0	8,7	3,3	4236	15,0	36,0	5295,0
241.17.32.064	32,0	16,0	64	269	11,0	4,6	6,4	2959	12,4	6,0	6,4	3336	16,0	11,6	4,4	4304	20,0	44,0	5380,0
241.17.32.076	32,0	16,0	76	219	13,2	5,5	7,7	2891	14,9	7,2	7,7	3263	19,2	13,9	5,3	4205	24,0	52,0	5256,0
241.17.32.089	32,0	16,0	89	180	16,0	6,7	9,3	2880	18,0	8,7	9,3	3240	23,2	16,8	6,4	4176	29,0	60,0	5220,0
241.17.32.102	32,0	16,0	102	155	18,2	7,6	10,6	2821	20,5	9,9	10,6	3178	26,4	19,1	7,3	4092	33,0	69,0	5115,0
241.17.32.115	32,0	16,0	115	140	19,8	8,3	11,5	2772	22,3	10,8	11,5	3122	28,8	20,9	7,9	4032	36,0	79,0	5040,0
241.17.32.127	32,0	16,0	127	124	22,6	9,4	13,2	2802	25,4	12,3	13,1	3150	32,8	23,8	9,0	4067	41,0	86,0	5084,0
241.17.32.152	32,0	16,0	152	102	27,5	11,5	16,0	2805	31,0	15,0	16,0	3162	40,0	29,0	11,0	4080	50,0	102,0	5100,0
241.17.32.178	32,0	16,0	178	88,3	32,5	13,6	18,9	2870	36,6	17,7	18,9	3232	47,2	34,2	13,0	4168	59,0	119,0	5209,7
241.17.32.203	32,0	16,0	203	76,0	37,4	15,6	21,8	2842	42,2	20,4	21,8	3207	54,4	39,4	15,0	4134	68,0	135,0	5168,0
241.17.32.254	32,0	16,0	254	60,8	46,8	19,6	27,2	2845	52,7	25,5	27,2	3204	68,0	49,3	18,7	4134	85,0	169,0	5168,0
241.17.32.305	32,0	16,0	305	49,1	56,7	23,7	33,0	2784	63,9	30,9	33,0	3137	82,4	59,7	22,7	4046	103,0	202,0	5057,3

High Performance Compression Springs
DIN ISO 10243



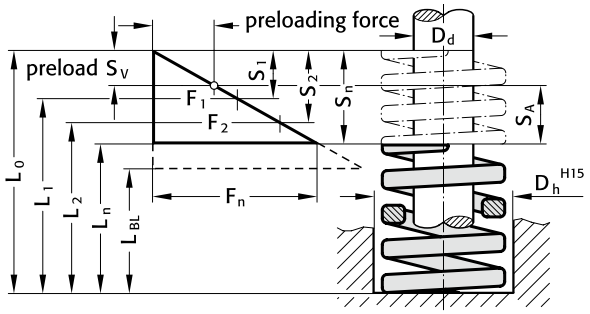

D_h = dia. of guide sleeve
D_d = diameter of guide pin
L_0 = free length of spring
$L_1...L_n$ = length of loaded spring (mm) as related to spring forces $F_1...F_n$
L_{BL} = length of compacted-spring (i.e. wire-to-wire)
$F_1...F_n$ = forces (N) as related to length of spring $L_1...L_n$
$S_{v1}...S_{v7}$ = recommend. preload. compression, as relat. to compress. $S_1...S_7$
$S_1...S_n$ = compr. as related to spring forces $F_1...F_n$
R = spring rate (N/mm)
$S_{A1}...S_{A7}$ = working stroke (mm)

241.14. High Performance Compression Springs DIN ISO 10243 Colour: „Green“

					30% stroke				40% stroke				45% stroke				50% stroke			
Order No	D_h	D_d	L_0	R	S_1	S_{v1}	S_{A1}	F_1	S_2	S_{v2}	S_{A2}	F_2	S_3	S_{v3}	S_{A3}	F_3	S_4	S_{v4}	S_{A4}	F_4
241.14.40.051	40,0	20,0	51	92,0	7,5	3,3	4,2	690	10,0	3,3	6,7	920	11,3	3,3	8,0	1040	12,5	4,5	8,0	1150
241.14.40.064	40,0	20,0	64	73,1	9,6	4,2	5,4	702	12,8	4,2	8,6	936	14,4	4,2	10,2	1053	16,0	5,8	10,2	1170
241.14.40.076	40,0	20,0	76	63,1	11,4	4,9	6,5	719	15,2	4,9	10,3	959	17,1	4,9	12,2	1079	19,0	6,8	12,2	1199
241.14.40.089	40,0	20,0	89	51,0	13,5	5,9	7,6	689	18,0	5,9	12,1	918	20,3	5,9	14,4	1035	22,5	8,1	14,4	1148
241.14.40.102	40,0	20,0	102	43,1	15,3	6,6	8,7	659	20,4	6,6	13,8	879	23,0	6,6	16,4	991	25,5	9,2	16,3	1099
241.14.40.115	40,0	20,0	115	39,6	17,4	7,5	9,9	689	23,2	7,5	15,7	919	26,1	7,5	18,6	1034	29,0	10,4	18,6	1148
241.14.40.127	40,0	20,0	127	37,0	19,5	8,5	11,0	722	26,0	8,5	17,5	962	29,3	8,5	20,8	1084	32,5	11,7	20,8	1203
241.14.40.139	40,0	20,0	139	32,0	21,3	9,2	12,1	682	28,4	9,2	19,2	909	32,0	9,2	22,8	1024	35,5	12,8	22,7	1136
241.14.40.152	40,0	20,0	152	28,1	23,4	10,1	13,3	658	31,2	10,1	21,1	877	35,1	10,1	25,0	986	39,0	14,0	25,0	1096
241.14.40.178	40,0	20,0	178	25,2	27,6	12,0	15,6	696	36,8	12,0	24,8	927	41,4	12,0	29,4	1043	46,0	16,6	29,4	1159
241.14.40.203	40,0	20,0	203	22,7	31,5	13,7	17,8	715	42,0	13,7	28,3	953	47,3	13,7	33,6	1074	52,5	18,9	33,6	1192
241.14.40.254	40,0	20,0	254	17,0	39,3	17,0	22,3	668	52,4	17,0	35,4	891	59,0	17,0	42,0	1003	65,5	23,6	41,9	1114
241.14.40.305	40,0	20,0	305	14,8	47,1	20,4	26,7	697	62,8	20,4	42,4	929	70,7	20,4	50,3	1046	78,5	28,3	50,2	1162

					55% stroke				62% stroke				80% stroke				100% stroke		
Order No	D_h	D_d	L_0	R	S_5	S_{v5}	S_{A5}	F_5	S_6	S_{v6}	S_{A6}	F_6	S_7	S_{v7}	S_{A7}	F_7	S_n	L_n	F_n
241.14.40.051	40,0	20,0	51	92,0	13,8	5,8	8,0	1270	15,5	7,5	8,0	1426	20,0	14,5	5,5	1840	25,0	26,0	2300,0
241.14.40.064	40,0	20,0	64	73,1	17,6	7,4	10,2	1287	19,8	9,6	10,2	1447	25,6	18,6	7,0	1871	32,0	32,0	2339,2
241.14.40.076	40,0	20,0	76	63,1	20,9	8,7	12,2	1319	23,6	11,4	12,2	1489	30,4	22,0	8,4	1918	38,0	38,0	2397,8
241.14.40.089	40,0	20,0	89	51,0	24,8	10,4	14,4	1265	27,9	13,5	14,4	1423	36,0	26,1	9,9	1836	45,0	44,0	2295,0
241.14.40.102	40,0	20,0	102	43,1	28,1	11,7	16,4	1211	31,6	15,3	16,3	1362	40,8	29,6	11,2	1758	51,0	51,0	2198,1
241.14.40.115	40,0	20,0	115	39,6	31,9	13,3	18,6	1263	36,0	17,4	18,6	1426	46,4	33,6	12,8	1837	58,0	57,0	2296,8
241.14.40.127	40,0	20,0	127	37,0	35,8	15,0	20,8	1325	40,3	19,5	20,8	1491	52,0	37,7	14,3	1924	65,0	62,0	2405,0
241.14.40.139	40,0	20,0	139	32,0	39,1	16,3	22,8	1251	44,0	21,3	22,7	1408	56,8	41,2	15,6	1818	71,0	68,0	2272,0
241.14.40.152	40,0	20,0	152	28,1	42,9	17,9	25,0	1205	48,4	23,4	25,0	1360	62,4	45,2	17,2	1753	78,0	74,0	2191,8
241.14.40.178	40,0	20,0	178	25,2	50,6	21,2	29,4	1275	57,0	27,6	29,4	1436	73,6	53,4	20,2	1855	92,0	86,0	2318,4
241.14.40.203	40,0	20,0	203	22,7	57,8	24,2	33,6	1312	65,1	31,5	33,6	1478	84,0	60,9	23,1	1907	105,0	98,0	2383,5
241.14.40.254	40,0	20,0	254	17,0	72,1	30,1	42,0	1226	81,2	39,3	41,9	1380	104,8	76,0	28,8	1782	131,0	123,0	2227,0
241.14.40.305	40,0	20,0	305	14,8	86,4	36,1	50,3	1279	97,3	47,1	50,2	1440	125,6	91,1	34,5	1859	157,0	148,0	2323,6

subject to alterations

High Performance Compression Springs
DIN ISO 10243

FIBRO

D_h = dia. of guide sleeve
D_d = diameter of guide pin
L_0 = free length of spring
$L_1...L_n$ = length of loaded spring (mm) as related to spring forces $F_1...F_n$
L_{BL} = length of compacted-spring (i.e. wire-to-wire)
$F_1...F_n$ = forces (N) as related to length of spring $L_1...L_n$
$S_{v1}...S_{v7}$ = recommend. preload. compression, as relat. to compress. $S_1...S_7$
$S_1...S_n$ = compr. as related to spring forces $F_1...F_n$
R = spring rate (N/mm)
$S_{A1}...S_{A7}$ = working stroke (mm)

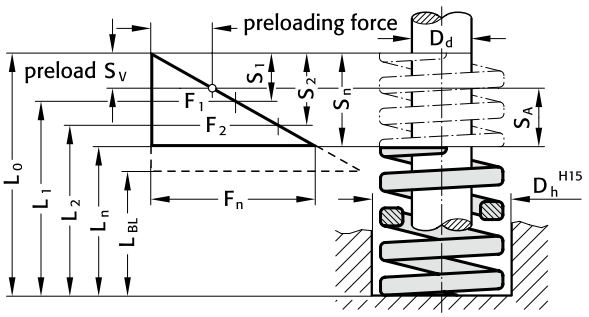



241.15. High Performance Compression Springs DIN ISO 10243 Colour: „Blue“

					30% stroke				40% stroke				45% stroke				50% stroke			
Order No	D_h	D_d	L_0	R	S_1	S_{v1}	S_{A1}	F_1	S_2	S_{v2}	S_{A2}	F_2	S_3	S_{v3}	S_{A3}	F_3	S_4	S_{v4}	S_{A4}	F_4
241.15.40.051	40,0	20,0	51	179,0	6,3	2,7	3,6	1128	8,4	2,7	5,7	1504	9,5	2,7	6,8	1701	10,5	3,8	6,7	1880
241.15.40.064	40,0	20,0	64	140,0	7,8	3,4	4,4	1092	10,4	3,4	7,0	1456	11,7	3,4	8,3	1638	13,0	4,7	8,3	1820
241.15.40.076	40,0	20,0	76	108,1	9,6	4,2	5,4	1038	12,8	4,2	8,6	1384	14,4	4,2	10,2	1557	16,0	5,8	10,2	1730
241.15.40.089	40,0	20,0	89	90,7	11,1	4,8	6,3	1007	14,8	4,8	10,0	1342	16,7	4,8	11,9	1515	18,5	6,7	11,8	1678
241.15.40.102	40,0	20,0	102	81,0	12,9	5,6	7,3	1045	17,2	5,6	11,6	1393	19,4	5,6	13,8	1571	21,5	7,7	13,8	1742
241.15.40.115	40,0	20,0	115	71,8	14,4	6,2	8,2	1034	19,2	6,2	13,0	1379	21,6	6,2	15,4	1551	24,0	8,6	15,4	1723
241.15.40.127	40,0	20,0	127	62,8	16,2	7,0	9,2	1017	21,6	7,0	14,6	1356	24,3	7,0	17,3	1526	27,0	9,7	17,3	1696
241.15.40.139	40,0	20,0	139	57,6	17,7	7,7	10,0	1020	23,6	7,7	15,9	1359	26,6	7,7	18,9	1532	29,5	10,6	18,9	1699
241.15.40.152	40,0	20,0	152	51,6	19,5	8,5	11,0	1006	26,0	8,5	17,5	1342	29,3	8,5	20,8	1512	32,5	11,7	20,8	1677
241.15.40.178	40,0	20,0	178	44,2	22,8	9,9	12,9	1008	30,4	9,9	20,5	1344	34,2	9,9	24,3	1512	38,0	13,7	24,3	1680
241.15.40.203	40,0	20,0	203	36,7	26,1	11,3	14,8	958	34,8	11,3	23,5	1277	39,2	11,3	27,9	1439	43,5	15,7	27,8	1596
241.15.40.254	40,0	20,0	254	30,1	33,0	14,3	18,7	993	44,0	14,3	29,7	1324	49,5	14,3	35,2	1490	55,0	19,8	35,2	1656
241.15.40.305	40,0	20,0	305	24,6	39,3	17,0	22,3	967	52,4	17,0	35,4	1289	59,0	17,0	42,0	1451	65,5	23,6	41,9	1611

					55% stroke				62% stroke				80% stroke				100% stroke		
Order No	D_h	D_d	L_0	R	S_5	S_{v5}	S_{A5}	F_5	S_6	S_{v6}	S_{A6}	F_6	S_7	S_{v7}	S_{A7}	F_7	S_n	L_n	F_n
241.15.40.051	40,0	20,0	51	179,0	11,6	4,8	6,8	2076	13,0	6,3	6,7	2327	16,8	12,2	4,6	3007	21,0	30,0	3759,0
241.15.40.064	40,0	20,0	64	140,0	14,3	6,0	8,3	2002	16,1	7,8	8,3	2254	20,8	15,1	5,7	2912	26,0	38,0	3640,0
241.15.40.076	40,0	20,0	76	108,1	17,6	7,4	10,2	1903	19,8	9,6	10,2	2140	25,6	18,6	7,0	2767	32,0	44,0	3459,2
241.15.40.089	40,0	20,0	89	90,7	20,4	8,5	11,9	1850	22,9	11,1	11,8	2077	29,6	21,5	8,1	2685	37,0	52,0	3355,9
241.15.40.102	40,0	20,0	102	81,0	23,7	9,9	13,8	1920	26,7	12,9	13,8	2163	34,4	24,9	9,5	2786	43,0	59,0	3483,0
241.15.40.115	40,0	20,0	115	71,8	26,4	11,0	15,4	1896	29,8	14,4	15,4	2140	38,4	27,8	10,6	2757	48,0	67,0	3446,4
241.15.40.127	40,0	20,0	127	62,8	29,7	12,4	17,3	1865	33,5	16,2	17,3	2104	43,2	31,3	11,9	2713	54,0	73,0	3391,2
241.15.40.139	40,0	20,0	139	57,6	32,5	13,6	18,9	1872	36,6	17,7	18,9	2108	47,2	34,2	13,0	2719	59,0	80,0	3398,4
241.15.40.152	40,0	20,0	152	51,6	35,8	15,0	20,8	1847	40,3	19,5	20,8	2079	52,0	37,7	14,3	2683	65,0	87,0	3354,0
241.15.40.178	40,0	20,0	178	44,2	41,8	17,5	24,3	1848	47,1	22,8	24,3	2082	60,8	44,1	16,7	2687	76,0	102,0	3359,2
241.15.40.203	40,0	20,0	203	36,7	47,9	20,0	27,9	1758	53,9	26,1	27,8	1978	69,6	50,5	19,1	2554	87,0	116,0	3192,9
241.15.40.254	40,0	20,0	254	30,1	60,5	25,3	35,2	1821	68,2	33,0	35,2	2053	88,0	63,8	24,2	2649	110,0	144,0	3311,0
241.15.40.305	40,0	20,0	305	24,6	72,1	30,1	42,0	1774	81,2	39,3	41,9	1998	104,8	76,0	28,8	2578	131,0	174,0	3222,6

High Performance Compression Springs
DIN ISO 10243



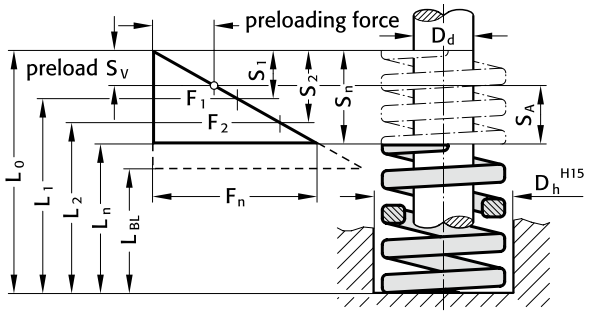

D_h = dia. of guide sleeve
D_d = diameter of guide pin
L_0 = free length of spring
$L_1...L_n$ = length of loaded spring (mm) as related to spring forces $F_1...F_n$
L_{BL} = length of compacted-spring (i.e. wire-to-wire)
$F_1...F_n$ = forces (N) as related to length of spring $L_1...L_n$
$S_{v1}...S_{v7}$ = recommend. preload. compression, as relat. to compress. $S_1...S_7$
$S_1...S_n$ = compr. as related to spring forces $F_1...F_n$
R = spring rate (N/mm)
$S_{A1}...S_{A7}$ = working stroke (mm)

241.16. High Performance Compression Springs DIN ISO 10243 Colour: „Red“

					30% Stroke				40% Stroke				45% Stroke				50% Stroke			
Order No	D_h	D_d	L_0	R	S_1	S_{v1}	S_{A1}	F_1	S_2	S_{v2}	S_{A2}	F_2	S_3	S_{v3}	S_{A3}	F_3	S_4	S_{v4}	S_{A4}	F_4
241.16.40.051	40,0	20,0	51	350,2	5,1	2,2	2,9	1786	6,8	2,2	4,6	2381	7,7	2,2	5,5	2697	8,5	3,1	5,4	2977
241.16.40.064	40,0	20,0	64	268,8	6,6	2,9	3,7	1774	8,8	2,9	5,9	2365	9,9	2,9	7,0	2661	11,0	4,0	7,0	2957
241.16.40.076	40,0	20,0	76	218,8	8,1	3,5	4,6	1772	10,8	3,5	7,3	2363	12,2	3,5	8,7	2669	13,5	4,9	8,6	2954
241.16.40.089	40,0	20,0	89	190,3	9,6	4,2	5,4	1827	12,8	4,2	8,6	2436	14,4	4,2	10,2	2740	16,0	5,8	10,2	3045
241.16.40.102	40,0	20,0	102	162,8	11,1	4,8	6,3	1807	14,8	4,8	10,0	2409	16,7	4,8	11,9	2719	18,5	6,7	11,8	3012
241.16.40.115	40,0	20,0	115	142,2	12,6	5,5	7,1	1792	16,8	5,5	11,3	2389	18,9	5,5	13,4	2688	21,0	7,6	13,4	2986
241.16.40.127	40,0	20,0	127	128,5	14,1	6,1	8,0	1812	18,8	6,1	12,7	2416	21,2	6,1	15,1	2724	23,5	8,5	15,0	3020
241.16.40.139	40,0	20,0	139	114,8	15,6	6,8	8,8	1791	20,8	6,8	14,0	2388	23,4	6,8	16,6	2686	26,0	9,4	16,6	2985
241.16.40.152	40,0	20,0	152	105,0	17,3	7,5	9,8	1817	23,0	7,5	15,5	2415	25,9	7,5	18,4	2720	28,8	10,4	18,4	3024
241.16.40.178	40,0	20,0	178	89,3	20,1	8,7	11,4	1795	26,8	8,7	18,1	2393	30,2	8,7	21,5	2697	33,5	12,1	21,4	2992
241.16.40.203	40,0	20,0	203	77,5	22,8	9,9	12,9	1767	30,4	9,9	20,5	2356	34,2	9,9	24,3	2651	38,0	13,7	24,3	2945
241.16.40.254	40,0	20,0	254	60,8	29,1	12,6	16,5	1769	38,8	12,6	26,2	2359	43,7	12,6	31,1	2657	48,5	17,5	31,0	2949
241.16.40.305	40,0	20,0	305	51,0	34,8	15,1	19,7	1775	46,4	15,1	31,3	2366	52,2	15,1	37,1	2662	58,0	20,9	37,1	2958

					55% Stroke				62% Stroke				80% Stroke				100% Stroke		
Order No	D_h	D_d	L_0	R	S_5	S_{v5}	S_{A5}	F_5	S_6	S_{v6}	S_{A6}	F_6	S_7	S_{v7}	S_{A7}	F_7	S_n	L_n	F_n
241.16.40.051	40,0	20,0	51	350,2	9,4	3,9	5,5	3292	10,5	5,1	5,4	3677	13,6	9,9	3,7	4763	17,0	34,0	5953,4
241.16.40.064	40,0	20,0	64	268,8	12,1	5,1	7,0	3252	13,6	6,6	7,0	3656	17,6	12,8	4,8	4731	22,0	42,0	5913,6
241.16.40.076	40,0	20,0	76	218,8	14,9	6,2	8,7	3260	16,7	8,1	8,6	3654	21,6	15,7	5,9	4726	27,0	49,0	5907,6
241.16.40.089	40,0	20,0	89	190,3	17,6	7,4	10,2	3349	19,8	9,6	10,2	3768	25,6	18,6	7,0	4872	32,0	57,0	6089,6
241.16.40.102	40,0	20,0	102	162,8	20,4	8,5	11,9	3321	22,9	11,1	11,8	3728	29,6	21,5	8,1	4819	37,0	65,0	6023,6
241.16.40.115	40,0	20,0	115	142,2	23,1	9,7	13,4	3285	26,0	12,6	13,4	3697	33,6	24,4	9,2	4778	42,0	73,0	5972,4
241.16.40.127	40,0	20,0	127	128,5	25,9	10,8	15,1	3328	29,1	14,1	15,0	3739	37,6	27,3	10,3	4832	47,0	80,0	6039,5
241.16.40.139	40,0	20,0	139	114,8	28,6	12,0	16,6	3283	32,2	15,6	16,6	3697	41,6	30,2	11,4	4776	52,0	87,0	5969,6
241.16.40.152	40,0	20,0	152	105,0	31,6	13,2	18,4	3318	35,7	17,3	18,4	3749	46,0	33,4	12,6	4830	57,5	94,5	6037,5
241.16.40.178	40,0	20,0	178	89,3	36,9	15,4	21,5	3295	41,5	20,1	21,4	3706	53,6	38,9	14,7	4786	67,0	111,0	5983,1
241.16.40.203	40,0	20,0	203	77,5	41,8	17,5	24,3	3240	47,1	22,8	24,3	3650	60,8	44,1	16,7	4712	76,0	127,0	5890,0
241.16.40.254	40,0	20,0	254	60,8	53,4	22,3	31,1	3247	60,1	29,1	31,0	3654	77,6	56,3	21,3	4718	97,0	157,0	5897,6
241.16.40.305	40,0	20,0	305	51,0	63,8	26,7	37,1	3254	71,9	34,8	37,1	3667	92,8	67,3	25,5	4733	116,0	189,0	5916,0

subject to alterations

High Performance Compression Springs
DIN ISO 10243

D_h = dia. of guide sleeve

D_d = diameter of guide pin

L_0 = free length of spring

$L_1...L_n$ = length of loaded spring (mm) as related to spring forces $F_1...F_n$

L_{BL} = length of compacted-spring (i.e. wire-to-wire)

$F_1...F_n$ = forces (N) as related to length of spring $L_1...L_n$

$S_{v1}...S_{v7}$ = recommend. preload. compression, as relat. to compress. $S_1...S_7$

$S_1...S_n$ = compr. as related to spring forces $F_1...F_n$

R = spring rate (N/mm)

$S_{A1}...S_{A7}$ = working stroke (mm)

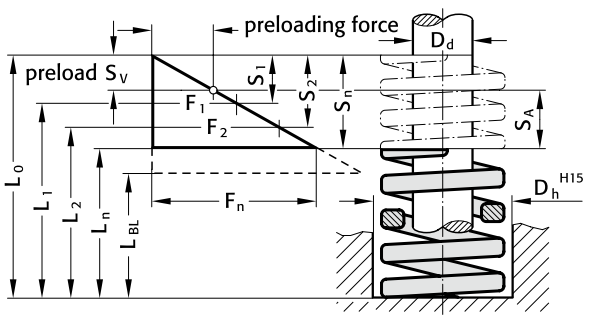



241.17. High Performance Compression Springs DIN ISO 10243 Colour: „Yellow“

					30% stroke				40% stroke				45% stroke				50% stroke			
Order No	D_h	D_d	L_0	R	S_1	S_{v1}	S_{A1}	F_1	S_2	S_{v2}	S_{A2}	F_2	S_3	S_{v3}	S_{A3}	F_3	S_4	S_{v4}	S_{A4}	F_4
241.17.40.051	40,0	20,0	51	628	4,5	2,0	2,5	2826	6,0	2,0	4,0	3768	6,8	2,0	4,8	4270	7,5	2,7	4,8	4710
241.17.40.064	40,0	20,0	64	488	5,7	2,5	3,2	2782	7,6	2,5	5,1	3709	8,6	2,5	6,1	4197	9,5	3,4	6,1	4636
241.17.40.076	40,0	20,0	76	379	7,2	3,1	4,1	2729	9,6	3,1	6,5	3638	10,8	3,1	7,7	4093	12,0	4,3	7,7	4548
241.17.40.089	40,0	20,0	89	321	8,4	3,6	4,8	2696	11,2	3,6	7,6	3595	12,6	3,6	9,0	4045	14,0	5,0	9,0	4494
241.17.40.102	40,0	20,0	102	281	9,9	4,3	5,6	2782	13,2	4,3	8,9	3709	14,9	4,3	10,6	4187	16,5	5,9	10,6	4637
241.17.40.115	40,0	20,0	115	245	11,1	4,8	6,3	2720	14,8	4,8	10,0	3626	16,7	4,8	11,9	4092	18,5	6,7	11,8	4533
241.17.40.127	40,0	20,0	127	221	12,3	5,3	7,0	2718	16,4	5,3	11,1	3624	18,5	5,3	13,2	4089	20,5	7,4	13,1	4531
241.17.40.152	40,0	20,0	152	168	15,0	6,5	8,5	2520	20,0	6,5	13,5	3360	22,5	6,5	16,0	3780	25,0	9,0	16,0	4200
241.17.40.203	40,0	20,0	203	132	20,1	8,7	11,4	2653	26,8	8,7	18,1	3538	30,2	8,7	21,5	3986	33,5	12,1	21,4	4422
241.17.40.254	40,0	20,0	254	107	25,5	11,1	14,4	2729	34,0	11,1	22,9	3638	38,3	11,1	27,2	4098	42,5	15,3	27,2	4548
241.17.40.305	40,0	20,0	305	87,9	30,6	13,3	17,3	2690	40,8	13,3	27,5	3586	45,9	13,3	32,6	4035	51,0	18,4	32,6	4483

					55% stroke				62% stroke				80% stroke				100% stroke		
Order No	D_h	D_d	L_0	R	S_5	S_{v5}	S_{A5}	F_5	S_6	S_{v6}	S_{A6}	F_6	S_7	S_{v7}	S_{A7}	F_7	S_n	L_n	F_n
241.17.40.051	40,0	20,0	51	628	8,3	3,5	4,8	5212	9,3	4,5	4,8	5840	12,0	8,7	3,3	7536	15,0	36,0	9420,0
241.17.40.064	40,0	20,0	64	488	10,5	4,4	6,1	5124	11,8	5,7	6,1	5758	15,2	11,0	4,2	7418	19,0	45,0	9272,0
241.17.40.076	40,0	20,0	76	379	13,2	5,5	7,7	5003	14,9	7,2	7,7	5647	19,2	13,9	5,3	7277	24,0	52,0	9096,0
241.17.40.089	40,0	20,0	89	321	15,4	6,4	9,0	4943	17,4	8,4	9,0	5585	22,4	16,2	6,2	7190	28,0	61,0	8988,0
241.17.40.102	40,0	20,0	102	281	18,2	7,6	10,6	5114	20,5	9,9	10,6	5761	26,4	19,1	7,3	7418	33,0	69,0	9273,0
241.17.40.115	40,0	20,0	115	245	20,4	8,5	11,9	4998	22,9	11,1	11,8	5611	29,6	21,5	8,1	7252	37,0	78,0	9065,0
241.17.40.127	40,0	20,0	127	221	22,6	9,4	13,2	4995	25,4	12,3	13,1	5613	32,8	23,8	9,0	7249	41,0	86,0	9061,0
241.17.40.152	40,0	20,0	152	168	27,5	11,5	16,0	4620	31,0	15,0	16,0	5208	40,0	29,0	11,0	6720	50,0	102,0	8400,0
241.17.40.203	40,0	20,0	203	132	36,9	15,4	21,5	4871	41,5	20,1	21,4	5478	53,6	38,9	14,7	7075	67,0	136,0	8844,0
241.17.40.254	40,0	20,0	254	107	46,8	19,6	27,2	5008	52,7	25,5	27,2	5639	68,0	49,3	18,7	7276	85,0	169,0	9095,0
241.17.40.305	40,0	20,0	305	87,9	56,1	23,5	32,6	4931	63,2	30,6	32,6	5555	81,6	59,2	22,4	7173	102,0	203,0	8965,8

High Performance Compression Springs
DIN ISO 10243



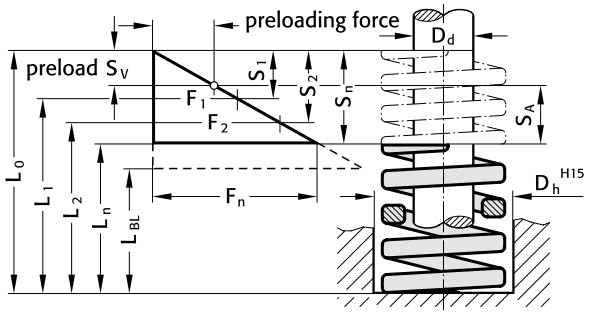

D_h = dia. of guide sleeve
D_d = diameter of guide pin
L_0 = free length of spring
$L_1...L_n$ = length of loaded spring (mm) as related to spring forces $F_1...F_n$
L_{BL} = length of compacted-spring (i.e. wire-to-wire)
$F_1...F_n$ = forces (N) as related to length of spring $L_1...L_n$
$S_{v1}...S_{v7}$ = recommend. preload. compression, as relat. to compress. $S_1...S_7$
$S_1...S_n$ = compr. as related to spring forces $F_1...F_n$
R = spring rate (N/mm)
$S_{A1}...S_{A7}$ = working stroke (mm)

241.14. High Performance Compression Springs DIN ISO 10243 Colour: „Green“

					30% stroke				40% stroke				45% stroke				50% stroke			
Order No	D_h	D_d	L_0	R	S_1	S_{v1}	S_{A1}	F_1	S_2	S_{v2}	S_{A2}	F_2	S_3	S_{v3}	S_{A3}	F_3	S_4	S_{v4}	S_{A4}	F_4
241.14.50.064	50,0	25,0	64	156,0	9,6	4,2	5,4	1498	12,8	4,2	8,6	1997	14,4	4,2	10,2	2246	16,0	5,8	10,2	2496
241.14.50.076	50,0	25,0	76	125,0	11,7	5,1	6,6	1463	15,6	5,1	10,5	1950	17,6	5,1	12,5	2200	19,5	7,0	12,5	2438
241.14.50.089	50,0	25,0	89	109,0	13,5	5,9	7,6	1472	18,0	5,9	12,1	1962	20,3	5,9	14,4	2213	22,5	8,1	14,4	2453
241.14.50.102	50,0	25,0	102	94,1	15,6	6,8	8,8	1468	20,8	6,8	14,0	1957	23,4	6,8	16,6	2202	26,0	9,4	16,6	2447
241.14.50.115	50,0	25,0	115	81,0	17,4	7,5	9,9	1409	23,2	7,5	15,7	1879	26,1	7,5	18,6	2114	29,0	10,4	18,6	2349
241.14.50.127	50,0	25,0	127	71,0	19,5	8,5	11,0	1385	26,0	8,5	17,5	1846	29,3	8,5	20,8	2080	32,5	11,7	20,8	2308
241.14.50.139	50,0	25,0	139	66,5	21,6	9,4	12,2	1436	28,8	9,4	19,4	1915	32,4	9,4	23,0	2155	36,0	13,0	23,0	2394
241.14.50.152	50,0	25,0	152	60,0	23,4	10,1	13,3	1404	31,2	10,1	21,1	1872	35,1	10,1	25,0	2106	39,0	14,0	25,0	2340
241.14.50.178	50,0	25,0	178	52,0	27,6	12,0	15,6	1435	36,8	12,0	24,8	1914	41,4	12,0	29,4	2153	46,0	16,6	29,4	2392
241.14.50.203	50,0	25,0	203	44,1	31,2	13,5	17,7	1376	41,6	13,5	28,1	1835	46,8	13,5	33,3	2064	52,0	18,7	33,3	2293
241.14.50.254	50,0	25,0	254	35,0	39,0	16,9	22,1	1365	52,0	16,9	35,1	1820	58,5	16,9	41,6	2048	65,0	23,4	41,6	2275
241.14.50.305	50,0	25,0	305	28,6	46,8	20,3	26,5	1338	62,4	20,3	42,1	1785	70,2	20,3	49,9	2008	78,0	28,1	49,9	2231

					55% stroke				62% stroke				80% stroke				100% stroke		
Order No	D_h	D_d	L_0	R	S_5	S_{v5}	S_{A5}	F_5	S_6	S_{v6}	S_{A6}	F_6	S_7	S_{v7}	S_{A7}	F_7	S_n	L_n	F_n
241.14.50.064	50,0	25,0	64	156,0	17,6	7,4	10,2	2746	19,8	9,6	10,2	3089	25,6	18,6	7,0	3994	32,0	32,0	4992,0
241.14.50.076	50,0	25,0	76	125,0	21,5	9,0	12,5	2688	24,2	11,7	12,5	3025	31,2	22,6	8,6	3900	39,0	37,0	4875,0
241.14.50.089	50,0	25,0	89	109,0	24,8	10,4	14,4	2703	27,9	13,5	14,4	3041	36,0	26,1	9,9	3924	45,0	44,0	4905,0
241.14.50.102	50,0	25,0	102	94,1	28,6	12,0	16,6	2691	32,2	15,6	16,6	3030	41,6	30,2	11,4	3915	52,0	50,0	4893,2
241.14.50.115	50,0	25,0	115	81,0	31,9	13,3	18,6	2584	36,0	17,4	18,6	2916	46,4	33,6	12,8	3758	58,0	57,0	4698,0
241.14.50.127	50,0	25,0	127	71,0	35,8	15,0	20,8	2542	40,3	19,5	20,8	2861	52,0	37,7	14,3	3692	65,0	62,0	4615,0
241.14.50.139	50,0	25,0	139	66,5	39,6	16,6	23,0	2633	44,6	21,6	23,0	2966	57,6	41,8	15,8	3830	72,0	67,0	4788,0
241.14.50.152	50,0	25,0	152	60,0	42,9	17,9	25,0	2574	48,4	23,4	25,0	2904	62,4	45,2	17,2	3744	78,0	74,0	4680,0
241.14.50.178	50,0	25,0	178	52,0	50,6	21,2	29,4	2631	57,0	27,6	29,4	2964	73,6	53,4	20,2	3827	92,0	86,0	4784,0
241.14.50.203	50,0	25,0	203	44,1	57,2	23,9	33,3	2523	64,5	31,2	33,3	2844	83,2	60,3	22,9	3669	104,0	99,0	4586,4
241.14.50.254	50,0	25,0	254	35,0	71,5	29,9	41,6	2503	80,6	39,0	41,6	2821	104,0	75,4	28,6	3640	130,0	124,0	4550,0
241.14.50.305	50,0	25,0	305	28,6	85,8	35,9	49,9	2454	96,7	46,8	49,9	2766	124,8	90,5	34,3	3569	156,0	149,0	4461,6

subject to alterations

High Performance Compression Springs
DIN ISO 10243

D_h = dia. of guide sleeve

D_d = diameter of guide pin

L_0 = free length of spring

$L_1...L_n$ = length of loaded spring (mm) as related to spring forces $F_1...F_n$

L_{BL} = length of compacted-spring (i.e. wire-to-wire)

$F_1...F_n$ = forces (N) as related to length of spring $L_1...L_n$

$S_{v1}...S_{v7}$ = recommend. preload. compression, as relat. to compress. $S_1...S_7$

$S_1...S_n$ = compr. as related to spring forces $F_1...F_n$

R = spring rate (N/mm)

$S_{A1}...S_{A7}$ = working stroke (mm)

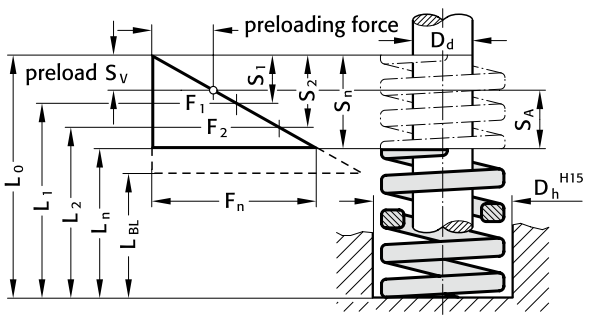



241.15. High Performance Compression Springs DIN ISO 10243 Colour: „Blue“

					30% stroke				40% stroke				45% stroke				50% stroke			
Order No	D_h	D_d	L_0	R	S_1	S_{v1}	S_{A1}	F_1	S_2	S_{v2}	S_{A2}	F_2	S_3	S_{v3}	S_{A3}	F_3	S_4	S_{v4}	S_{A4}	F_4
241.15.50.064	50,0	25,0	64	209,1	8,1	3,5	4,6	1694	10,8	3,5	7,3	2258	12,2	3,5	8,7	2551	13,5	4,9	8,6	2823
241.15.50.076	50,0	25,0	76	168,1	9,6	4,2	5,4	1614	12,8	4,2	8,6	2152	14,4	4,2	10,2	2421	16,0	5,8	10,2	2690
241.15.50.089	50,0	25,0	89	140,0	11,1	4,8	6,3	1554	14,8	4,8	10,0	2072	16,7	4,8	11,9	2338	18,5	6,7	11,8	2590
241.15.50.102	50,0	25,0	102	119,0	12,9	5,6	7,3	1535	17,2	5,6	11,6	2047	19,4	5,6	13,8	2309	21,5	7,7	13,8	2559
241.15.50.115	50,0	25,0	115	106,0	14,7	6,4	8,3	1558	19,6	6,4	13,2	2078	22,1	6,4	15,7	2343	24,5	8,8	15,7	2597
241.15.50.127	50,0	25,0	127	97,0	16,2	7,0	9,2	1571	21,6	7,0	14,6	2095	24,3	7,0	17,3	2357	27,0	9,7	17,3	2619
241.15.50.139	50,0	25,0	139	87,0	17,7	7,7	10,0	1540	23,6	7,7	15,9	2053	26,6	7,7	18,9	2314	29,5	10,6	18,9	2567
241.15.50.152	50,0	25,0	152	80,1	19,8	8,6	11,2	1586	26,4	8,6	17,8	2115	29,7	8,6	21,1	2379	33,0	11,9	21,1	2643
241.15.50.178	50,0	25,0	178	69,6	23,1	10,0	13,1	1608	30,8	10,0	20,8	2144	34,7	10,0	24,7	2415	38,5	13,9	24,6	2680
241.15.50.203	50,0	25,0	203	59,8	26,4	11,4	15,0	1579	35,2	11,4	23,8	2105	39,6	11,4	28,2	2368	44,0	15,8	28,2	2631
241.15.50.229	50,0	25,0	229	50,9	30,0	13,0	17,0	1527	40,0	13,0	27,0	2036	45,0	13,0	32,0	2291	50,0	18,0	32,0	2545
241.15.50.254	50,0	25,0	254	44,0	35,1	15,2	19,9	1544	46,8	15,2	31,6	2059	52,7	15,2	37,5	2319	58,5	21,1	37,4	2574
241.15.50.305	50,0	25,0	305	38,7	40,2	17,4	22,8	1556	53,6	17,4	36,2	2074	60,3	17,4	42,9	2334	67,0	24,1	42,9	2593

					55% stroke				62% stroke				80% stroke				100% stroke		
Order No	D_h	D_d	L_0	R	S_5	S_{v5}	S_{A5}	F_5	S_6	S_{v6}	S_{A6}	F_6	S_7	S_{v7}	S_{A7}	F_7	S_n	L_n	F_n
241.15.50.064	50,0	25,0	64	209,1	14,9	6,2	8,7	3116	16,7	8,1	8,6	3492	21,6	15,7	5,9	4517	27,0	37,0	5645,7
241.15.50.076	50,0	25,0	76	168,1	17,6	7,4	10,2	2959	19,8	9,6	10,2	3328	25,6	18,6	7,0	4303	32,0	44,0	5379,2
241.15.50.089	50,0	25,0	89	140,0	20,4	8,5	11,9	2856	22,9	11,1	11,8	3206	29,6	21,5	8,1	4144	37,0	52,0	5180,0
241.15.50.102	50,0	25,0	102	119,0	23,7	9,9	13,8	2820	26,7	12,9	13,8	3177	34,4	24,9	9,5	4094	43,0	59,0	5117,0
241.15.50.115	50,0	25,0	115	106,0	27,0	11,3	15,7	2862	30,4	14,7	15,7	3222	39,2	28,4	10,8	4155	49,0	66,0	5194,0
241.15.50.127	50,0	25,0	127	97,0	29,7	12,4	17,3	2881	33,5	16,2	17,3	3250	43,2	31,3	11,9	4190	54,0	73,0	5238,0
241.15.50.139	50,0	25,0	139	87,0	32,5	13,6	18,9	2828	36,6	17,7	18,9	3184	47,2	34,2	13,0	4106	59,0	80,0	5133,0
241.15.50.152	50,0	25,0	152	80,1	36,3	15,2	21,1	2908	40,9	19,8	21,1	3276	52,8	38,3	14,5	4229	66,0	86,0	5286,6
241.15.50.178	50,0	25,0	178	69,6	42,4	17,7	24,7	2951	47,7	23,1	24,6	3320	61,6	44,7	16,9	4287	77,0	101,0	5359,2
241.15.50.203	50,0	25,0	203	59,8	48,4	20,2	28,2	2894	54,6	26,4	28,2	3265	70,4	51,0	19,4	4210	88,0	115,0	5262,4
241.15.50.229	50,0	25,0	229	50,9	55,0	23,0	32,0	2800	62,0	30,0	32,0	3156	80,0	58,0	22,0	4072	100,0	129,0	5090,0
241.15.50.254	50,0	25,0	254	44,0	64,4	26,9	37,5	2834	72,5	35,1	37,4	3190	93,6	67,9	25,7	4118	117,0	137,0	5148,0
241.15.50.305	50,0	25,0	305	38,7	73,7	30,8	42,9	2852	83,1	40,2	42,9	3216	107,2	77,7	29,5	4149	134,0	171,0	5185,8

High Performance Compression Springs
DIN ISO 10243



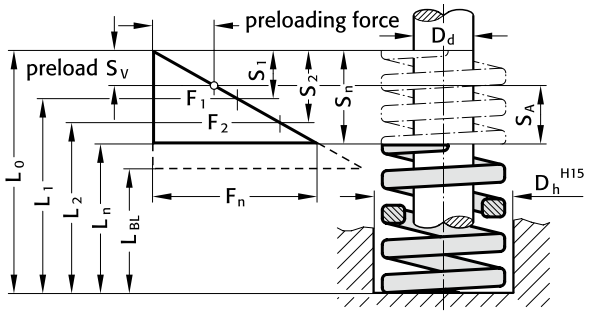

D_h = dia. of guide sleeve
D_d = diameter of guide pin
L_0 = free length of spring
$L_1...L_n$ = length of loaded spring (mm) as related to spring forces $F_1...F_n$
L_{BL} = length of compacted-spring (i.e. wire-to-wire)
$F_1...F_n$ = forces (N) as related to length of spring $L_1...L_n$
$S_{v1}...S_{v7}$ = recommend. preload. compression, as relat. to compress. $S_1...S_7$
$S_1...S_n$ = compr. as related to spring forces $F_1...F_n$
R = spring rate (N/mm)
$S_{A1}...S_{A7}$ = working stroke (mm)

241.16. High Performance Compression Springs DIN ISO 10243 Colour: „Red“

					30% Stroke				40% Stroke				45% Stroke				50% Stroke			
Order No	D_h	D_d	L_0	R	S_1	S_{v1}	S_{A1}	F_1	S_2	S_{v2}	S_{A2}	F_2	S_3	S_{v3}	S_{A3}	F_3	S_4	S_{v4}	S_{A4}	F_4
241.16.50.064	50,0	25,0	64	413,0	6,5	2,8	3,7	2685	8,6	2,8	5,8	3552	9,7	2,8	6,9	4006	10,8	3,9	6,9	4460
241.16.50.076	50,0	25,0	76	339,4	7,8	3,4	4,4	2647	10,4	3,4	7,0	3530	11,7	3,4	8,3	3971	13,0	4,7	8,3	4412
241.16.50.089	50,0	25,0	89	288,4	9,2	4,0	5,2	2653	12,2	4,0	8,2	3518	13,7	4,0	9,7	3951	15,3	5,5	9,8	4413
241.16.50.102	50,0	25,0	102	245,3	10,5	4,6	5,9	2576	14,0	4,6	9,4	3434	15,8	4,6	11,2	3876	17,5	6,3	11,2	4293
241.16.50.115	50,0	25,0	115	214,8	12,0	5,2	6,8	2578	16,0	5,2	10,8	3437	18,0	5,2	12,8	3866	20,0	7,2	12,8	4296
241.16.50.127	50,0	25,0	127	192,3	13,5	5,9	7,6	2596	18,0	5,9	12,1	3461	20,3	5,9	14,4	3904	22,5	8,1	14,4	4327
241.16.50.139	50,0	25,0	139	170,7	15,0	6,5	8,5	2561	20,0	6,5	13,5	3414	22,5	6,5	16,0	3841	25,0	9,0	16,0	4268
241.16.50.152	50,0	25,0	152	154,0	16,2	7,0	9,2	2495	21,6	7,0	14,6	3326	24,3	7,0	17,3	3742	27,0	9,7	17,3	4158
241.16.50.178	50,0	25,0	178	134,4	19,2	8,3	10,9	2580	25,6	8,3	17,3	3441	28,8	8,3	20,5	3871	32,0	11,5	20,5	4301
241.16.50.203	50,0	25,0	203	116,7	21,8	9,4	12,4	2544	29,0	9,4	19,6	3384	32,6	9,4	23,2	3804	36,3	13,1	23,2	4236
241.16.50.254	50,0	25,0	254	89,3	27,6	12,0	15,6	2465	36,8	12,0	24,8	3286	41,4	12,0	29,4	3697	46,0	16,6	29,4	4108
241.16.50.305	50,0	25,0	305	73,6	33,6	14,6	19,0	2473	44,8	14,6	30,2	3297	50,4	14,6	35,8	3709	56,0	20,2	35,8	4122

					55% Stroke				62% Stroke				80% Stroke				100% Stroke		
Order No	D_h	D_d	L_0	R	S_5	S_{v5}	S_{A5}	F_5	S_6	S_{v6}	S_{A6}	F_6	S_7	S_{v7}	S_{A7}	F_7	S_n	L_n	F_n
241.16.50.064	50,0	25,0	64	413,0	11,8	4,9	6,9	4873	13,3	6,5	6,8	5493	17,2	12,5	4,7	7104	21,5	42,5	8879,5
241.16.50.076	50,0	25,0	76	339,4	14,3	6,0	8,3	4853	16,1	7,8	8,3	5464	20,8	15,1	5,7	7060	26,0	50,0	8824,4
241.16.50.089	50,0	25,0	89	288,4	16,8	7,0	9,8	4845	18,9	9,2	9,7	5451	24,4	17,7	6,7	7037	30,5	58,5	8796,2
241.16.50.102	50,0	25,0	102	245,3	19,3	8,1	11,2	4734	21,7	10,5	11,2	5323	28,0	20,3	7,7	6868	35,0	67,0	8585,5
241.16.50.115	50,0	25,0	115	214,8	22,0	9,2	12,8	4726	24,8	12,0	12,8	5327	32,0	23,2	8,8	6874	40,0	75,0	8592,0
241.16.50.127	50,0	25,0	127	192,3	24,8	10,4	14,4	4769	27,9	13,5	14,4	5365	36,0	26,1	9,9	6923	45,0	82,0	8653,5
241.16.50.139	50,0	25,0	139	170,7	27,5	11,5	16,0	4694	31,0	15,0	16,0	5292	40,0	29,0	11,0	6828	50,0	89,0	8535,0
241.16.50.152	50,0	25,0	152	154,0	29,7	12,4	17,3	4574	33,5	16,2	17,3	5159	43,2	31,3	11,9	6653	54,0	98,0	8316,0
241.16.50.178	50,0	25,0	178	134,4	35,2	14,7	20,5	4731	39,7	19,2	20,5	5336	51,2	37,1	14,1	6881	64,0	114,0	8601,6
241.16.50.203	50,0	25,0	203	116,7	39,9	16,7	23,2	4656	45,0	21,8	23,2	5252	58,0	42,1	15,9	6769	72,5	130,5	8460,8
241.16.50.254	50,0	25,0	254	89,3	50,6	21,2	29,4	4519	57,0	27,6	29,4	5090	73,6	53,4	20,2	6572	92,0	162,0	8215,6
241.16.50.305	50,0	25,0	305	73,6	61,6	25,8	35,8	4534	69,4	33,6	35,8	5108	89,6	65,0	24,6	6595	112,0	193,0	8243,2

subject to alterations

High Performance Compression Springs
DIN ISO 10243

FIBRO

D_h = dia. of guide sleeve
D_d = diameter of guide pin
L_0 = free length of spring
$L_1...L_n$ = length of loaded spring (mm) as related to spring forces $F_1...F_n$
L_{BL} = length of compacted-spring (i.e. wire-to-wire)
$F_1...F_n$ = forces (N) as related to length of spring $L_1...L_n$
$S_{v1}...S_{v7}$ = recommend. preload. compression, as relat. to compress. $S_1...S_7$
$S_1...S_n$ = compr. as related to spring forces $F_1...F_n$
R = spring rate (N/mm)
$S_{A1}...S_{A7}$ = working stroke (mm)

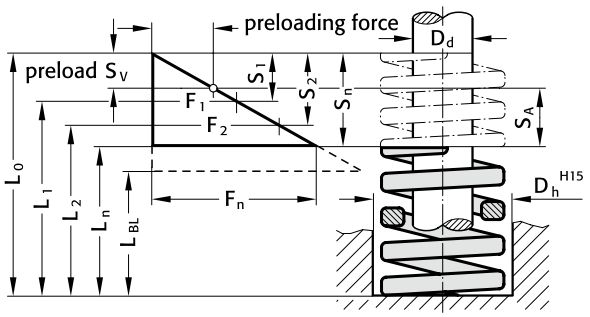



241.17. High Performance Compression Springs DIN ISO 10243 Colour: „Yellow“

					30% stroke				40% stroke				45% stroke				50% stroke			
Order No	D_h	D_d	L_0	R	S_1	S_{v1}	S_{A1}	F_1	S_2	S_{v2}	S_{A2}	F_2	S_3	S_{v3}	S_{A3}	F_3	S_4	S_{v4}	S_{A4}	F_4
241.17.50.064	50,0	25,0	64	709	5,7	2,5	3,2	4041	7,6	2,5	5,1	5388	8,6	2,5	6,1	6097	9,5	3,4	6,1	6736
241.17.50.076	50,0	25,0	76	572	6,9	3,0	3,9	3947	9,2	3,0	6,2	5262	10,4	3,0	7,4	5949	11,5	4,1	7,4	6578
241.17.50.089	50,0	25,0	89	475	8,1	3,5	4,6	3848	10,8	3,5	7,3	5130	12,2	3,5	8,7	5795	13,5	4,9	8,6	6413
241.17.50.102	50,0	25,0	102	405	9,3	4,0	5,3	3767	12,4	4,0	8,4	5022	14,0	4,0	10,0	5670	15,5	5,6	9,9	6278
241.17.50.115	50,0	25,0	115	352	10,5	4,6	5,9	3696	14,0	4,6	9,4	4928	15,8	4,6	11,2	5562	17,5	6,3	11,2	6160
241.17.50.127	50,0	25,0	127	316	11,7	5,1	6,6	3697	15,6	5,1	10,5	4930	17,6	5,1	12,5	5562	19,5	7,0	12,5	6162
241.17.50.152	50,0	25,0	152	239	14,1	6,1	8,0	3370	18,8	6,1	12,7	4493	21,2	6,1	15,1	5067	23,5	8,5	15,0	5617
241.17.50.203	50,0	25,0	203	187	22,2	9,6	12,6	4151	29,6	9,6	20,0	5535	33,3	9,6	23,7	6227	37,0	13,3	23,7	6919
241.17.50.254	50,0	25,0	254	153	24,0	10,4	13,6	3672	32,0	10,4	21,6	4896	36,0	10,4	25,6	5508	40,0	14,4	25,6	6120
241.17.50.305	50,0	25,0	305	127	29,1	12,6	16,5	3696	38,8	12,6	26,2	4928	43,7	12,6	31,1	5550	48,5	17,5	31,0	6160

					55% stroke				62% stroke				80% stroke				100% stroke		
Order No	D_h	D_d	L_0	R	S_5	S_{v5}	S_{A5}	F_5	S_6	S_{v6}	S_{A6}	F_6	S_7	S_{v7}	S_{A7}	F_7	S_n	L_n	F_n
241.17.50.064	50,0	25,0	64	709	10,5	4,4	6,1	7445	11,8	5,7	6,1	8366	15,2	11,0	4,2	10777	19,0	45,0	13471,0
241.17.50.076	50,0	25,0	76	572	12,7	5,3	7,4	7264	14,3	6,9	7,4	8180	18,4	13,3	5,1	10525	23,0	53,0	13156,0
241.17.50.089	50,0	25,0	89	475	14,9	6,2	8,7	7078	16,7	8,1	8,6	7933	21,6	15,7	5,9	10260	27,0	62,0	12825,0
241.17.50.102	50,0	25,0	102	405	17,1	7,1	10,0	6926	19,2	9,3	9,9	7776	24,8	18,0	6,8	10044	31,0	71,0	12555,0
241.17.50.115	50,0	25,0	115	352	19,3	8,1	11,2	6794	21,7	10,5	11,2	7638	28,0	20,3	7,7	9856	35,0	80,0	12320,0
241.17.50.127	50,0	25,0	127	316	21,5	9,0	12,5	6794	24,2	11,7	12,5	7647	31,2	22,6	8,6	9859	39,0	88,0	12324,0
241.17.50.152	50,0	25,0	152	239	25,9	10,8	15,1	6190	29,1	14,1	15,0	6955	37,6	27,3	10,3	8986	47,0	105,0	11233,0
241.17.50.203	50,0	25,0	203	187	40,7	17,0	23,7	7611	45,9	22,2	23,7	8583	59,2	42,9	16,3	11070	74,0	129,0	13838,0
241.17.50.254	50,0	25,0	254	153	44,0	18,4	25,6	6732	49,6	24,0	25,6	7589	64,0	46,4	17,6	9792	80,0	174,0	12240,0
241.17.50.305	50,0	25,0	305	127	53,4	22,3	31,1	6782	60,1	29,1	31,0	7633	77,6	56,3	21,3	9855	97,0	208,0	12319,0

High Performance Compression Springs
DIN ISO 10243



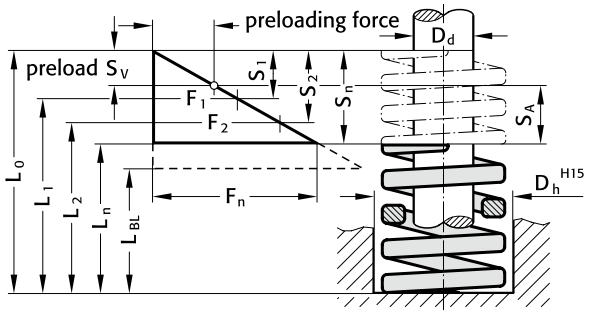

D_h = dia. of guide sleeve
D_d = diameter of guide pin
L_0 = free length of spring
$L_1...L_n$ = length of loaded spring (mm) as related to spring forces $F_1...F_n$
L_{BL} = length of compacted-spring (i.e. wire-to-wire)
$F_1...F_n$ = forces (N) as related to length of spring $L_1...L_n$
$S_{v1}...S_{v7}$ = recommend. preload. compression, as relat. to compress. $S_1...S_7$
$S_1...S_n$ = compr. as related to spring forces $F_1...F_n$
R = spring rate (N/mm)
$S_{A1}...S_{A7}$ = working stroke (mm)

241.14. High Performance Compression Springs DIN ISO 10243 Colour: „Green“

					30% stroke				40% stroke				45% stroke				50% stroke			
Order No	D_h	D_d	L_0	R	S_1	S_{v1}	S_{A1}	F_1	S_2	S_{v2}	S_{A2}	F_2	S_3	S_{v3}	S_{A3}	F_3	S_4	S_{v4}	S_{A4}	F_4
241.14.63.076	63,0	38,0	76	189,1	11,4	4,9	6,5	2156	15,2	4,9	10,3	2874	17,1	4,9	12,2	3234	19,0	6,8	12,2	3593
241.14.63.089	63,0	38,0	89	158,1	13,2	5,7	7,5	2087	17,6	5,7	11,9	2783	19,8	5,7	14,1	3130	22,0	7,9	14,1	3478
241.14.63.102	63,0	38,0	102	131,0	15,0	6,5	8,5	1965	20,0	6,5	13,5	2620	22,5	6,5	16,0	2948	25,0	9,0	16,0	3275
241.14.63.115	63,0	38,0	115	116,0	17,1	7,4	9,7	1984	22,8	7,4	15,4	2645	25,7	7,4	18,3	2981	28,5	10,3	18,2	3306
241.14.63.127	63,0	38,0	127	103,1	19,2	8,3	10,9	1980	25,6	8,3	17,3	2639	28,8	8,3	20,5	2969	32,0	11,5	20,5	3299
241.14.63.152	63,0	38,0	152	84,4	22,8	9,9	12,9	1924	30,4	9,9	20,5	2566	34,2	9,9	24,3	2886	38,0	13,7	24,3	3207
241.14.63.178	63,0	38,0	178	71,5	26,7	11,6	15,1	1909	35,6	11,6	24,0	2545	40,1	11,6	28,5	2867	44,5	16,0	28,5	3182
241.14.63.203	63,0	38,0	203	61,7	30,6	13,3	17,3	1888	40,8	13,3	27,5	2517	45,9	13,3	32,6	2832	51,0	18,4	32,6	3147
241.14.63.254	63,0	38,0	254	47,0	38,4	16,6	21,8	1805	51,2	16,6	34,6	2406	57,6	16,6	41,0	2707	64,0	23,0	41,0	3008
241.14.63.305	63,0	38,0	305	38,3	45,6	19,8	25,8	1746	60,8	19,8	41,0	2329	68,4	19,8	48,6	2620	76,0	27,4	48,6	2911

					55% stroke				62% stroke				80% stroke				100% stroke		
Order No	D_h	D_d	L_0	R	S_5	S_{v5}	S_{A5}	F_5	S_6	S_{v6}	S_{A6}	F_6	S_7	S_{v7}	S_{A7}	F_7	S_n	L_n	F_n
241.14.63.076	63,0	38,0	76	189,1	20,9	8,7	12,2	3952	23,6	11,4	12,2	4463	30,4	22,0	8,4	5749	38,0	38,0	7185,8
241.14.63.089	63,0	38,0	89	158,1	24,2	10,1	14,1	3826	27,3	13,2	14,1	4316	35,2	25,5	9,7	5565	44,0	45,0	6956,4
241.14.63.102	63,0	38,0	102	131,0	27,5	11,5	16,0	3603	31,0	15,0	16,0	4061	40,0	29,0	11,0	5240	50,0	52,0	6550,0
241.14.63.115	63,0	38,0	115	116,0	31,4	13,1	18,3	3642	35,3	17,1	18,2	4095	45,6	33,1	12,5	5290	57,0	58,0	6612,0
241.14.63.127	63,0	38,0	127	103,1	35,2	14,7	20,5	3629	39,7	19,2	20,5	4093	51,2	37,1	14,1	5279	64,0	63,0	6598,4
241.14.63.152	63,0	38,0	152	84,4	41,8	17,5	24,3	3528	47,1	22,8	24,3	3975	60,8	44,1	16,7	5132	76,0	76,0	6414,4
241.14.63.178	63,0	38,0	178	71,5	49,0	20,5	28,5	3504	55,2	26,7	28,5	3947	71,2	51,6	19,6	5091	89,0	89,0	6363,5
241.14.63.203	63,0	38,0	203	61,7	56,1	23,5	32,6	3461	63,2	30,6	32,6	3899	81,6	59,2	22,4	5035	102,0	101,0	6293,4
241.14.63.254	63,0	38,0	254	47,0	70,4	29,4	41,0	3309	79,4	38,4	41,0	3732	102,4	74,2	28,2	4813	128,0	126,0	6016,0
241.14.63.305	63,0	38,0	305	38,3	83,6	35,0	48,6	3202	94,2	45,6	48,6	3608	121,6	88,2	33,4	4657	152,0	153,0	5821,6

subject to alterations

High Performance Compression Springs
DIN ISO 10243

FIBRO

D_h = dia. of guide sleeve

D_d = diameter of guide pin

L_0 = free length of spring

$L_1...L_n$ = length of loaded spring (mm) as related to spring forces $F_1...F_n$

L_{BL} = length of compacted-spring (i.e. wire-to-wire)

$F_1...F_n$ = forces (N) as related to length of spring $L_1...L_n$

$S_{v1}...S_{v7}$ = recommend. preload. compression, as relat. to compress. $S_1...S_7$

$S_1...S_n$ = compr. as related to spring forces $F_1...F_n$

R = spring rate (N/mm)

$S_{A1}...S_{A7}$ = working stroke (mm)

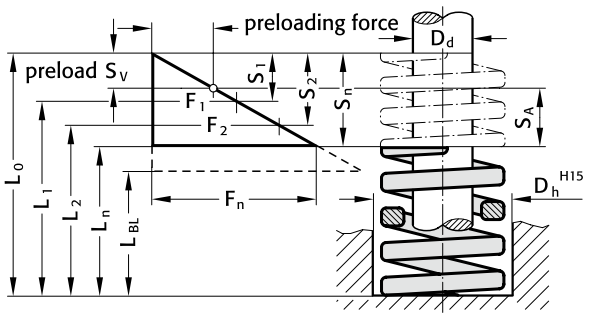



241.15. High Performance Compression Springs DIN ISO 10243 Colour: „Blue“

					30% stroke				40% stroke				45% stroke				50% stroke			
Order No	D_h	D_d	L_0	R	S_1	S_{v1}	S_{A1}	F_1	S_2	S_{v2}	S_{A2}	F_2	S_3	S_{v3}	S_{A3}	F_3	S_4	S_{v4}	S_{A4}	F_4
241.15.63.076	63,0	38,0	76	312,1	9,6	4,2	5,4	2996	12,8	4,2	8,6	3995	14,4	4,2	10,2	4494	16,0	5,8	10,2	4994
241.15.63.089	63,0	38,0	89	260,1	11,4	4,9	6,5	2965	15,2	4,9	10,3	3954	17,1	4,9	12,2	4448	19,0	6,8	12,2	4942
241.15.63.102	63,0	38,0	102	221,1	13,2	5,7	7,5	2919	17,6	5,7	11,9	3891	19,8	5,7	14,1	4378	22,0	7,9	14,1	4864
241.15.63.115	63,0	38,0	115	187,0	15,0	6,5	8,5	2805	20,0	6,5	13,5	3740	22,5	6,5	16,0	4208	25,0	9,0	16,0	4675
241.15.63.127	63,0	38,0	127	168,1	16,8	7,3	9,5	2824	22,4	7,3	15,1	3765	25,2	7,3	17,9	4236	28,0	10,1	17,9	4707
241.15.63.152	63,0	38,0	152	136,0	20,1	8,7	11,4	2734	26,8	8,7	18,1	3645	30,2	8,7	21,5	4107	33,5	12,1	21,4	4556
241.15.63.178	63,0	38,0	178	114,0	23,4	10,1	13,3	2668	31,2	10,1	21,1	3557	35,1	10,1	25,0	4001	39,0	14,0	25,0	4446
241.15.63.203	63,0	38,0	203	100,0	27,0	11,7	15,3	2700	36,0	11,7	24,3	3600	40,5	11,7	28,8	4050	45,0	16,2	28,8	4500
241.15.63.229	63,0	38,0	229	89,3	30,6	13,3	17,3	2733	40,8	13,3	27,5	3643	45,9	13,3	32,6	4099	51,0	18,4	32,6	4554
241.15.63.254	63,0	38,0	254	78,5	34,5	15,0	19,5	2708	46,0	15,0	31,0	3611	51,8	15,0	36,8	4066	57,5	20,7	36,8	4514
241.15.63.305	63,0	38,0	305	64,8	41,4	17,9	23,5	2683	55,2	17,9	37,3	3577	62,1	17,9	44,2	4024	69,0	24,8	44,2	4471

					55% stroke				62% stroke				80% stroke				100% stroke		
Order No	D_h	D_d	L_0	R	S_5	S_{v5}	S_{A5}	F_5	S_6	S_{v6}	S_{A6}	F_6	S_7	S_{v7}	S_{A7}	F_7	S_n	L_n	F_n
241.15.63.076	63,0	38,0	76	312,1	17,6	7,4	10,2	5493	19,8	9,6	10,2	6180	25,6	18,6	7,0	7990	32,0	44,0	9987,2
241.15.63.089	63,0	38,0	89	260,1	20,9	8,7	12,2	5436	23,6	11,4	12,2	6138	30,4	22,0	8,4	7907	38,0	51,0	9883,8
241.15.63.102	63,0	38,0	102	221,1	24,2	10,1	14,1	5351	27,3	13,2	14,1	6036	35,2	25,5	9,7	7783	44,0	58,0	9728,4
241.15.63.115	63,0	38,0	115	187,0	27,5	11,5	16,0	5143	31,0	15,0	16,0	5797	40,0	29,0	11,0	7480	50,0	65,0	9350,0
241.15.63.127	63,0	38,0	127	168,1	30,8	12,9	17,9	5177	34,7	16,8	17,9	5833	44,8	32,5	12,3	7531	56,0	71,0	9413,6
241.15.63.152	63,0	38,0	152	136,0	36,9	15,4	21,5	5018	41,5	20,1	21,4	5644	53,6	38,9	14,7	7290	67,0	85,0	9112,0
241.15.63.178	63,0	38,0	178	114,0	42,9	17,9	25,0	4891	48,4	23,4	25,0	5518	62,4	45,2	17,2	7114	78,0	100,0	8892,0
241.15.63.203	63,0	38,0	203	100,0	49,5	20,7	28,8	4950	55,8	27,0	28,8	5580	72,0	52,2	19,8	7200	90,0	113,0	9000,0
241.15.63.229	63,0	38,0	229	89,3	56,1	23,5	32,6	5010	63,2	30,6	32,6	5644	81,6	59,2	22,4	7287	102,0	127,0	9108,6
241.15.63.254	63,0	38,0	254	78,5	63,3	26,5	36,8	4969	71,3	34,5	36,8	5597	92,0	66,7	25,3	7222	115,0	139,0	9027,5
241.15.63.305	63,0	38,0	305	64,8	75,9	31,7	44,2	4918	85,6	41,4	44,2	5547	110,4	80,0	30,4	7154	138,0	167,0	8942,4

FIBRO

High performance compression spring, 3XLF, Colour "White"



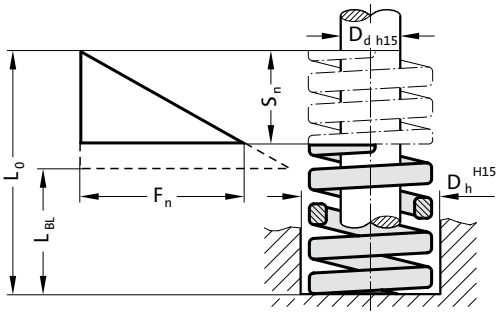

D_h = dia. of guide sleeve

D_d = diameter of guide pin

L_0 = free length of spring

L_{BL} = length of compacted spring (i.e. wire-to-wire)

F_n = Spring force in N

S_n = Stroke

R = spring rate (N/mm)

Description:

The diameters are comparable with the high performance compression springs DIN ISO 10243. The special flat wound wire cross section brings a reduction of the medium winding diameter for the same winding ratio with an edge-wound spring. Consequently, the high performance compression spring 3XLF has a 6x larger starting spring force than the high performance compression spring DIN ISO 10243 colour code “yellow”.

241.19. High performance compression spring, 3XLF, Colour "White"

Order No	D_h	D_d	L_0	R	S_1	S_{V1}	S_{A1}	F_1	S_n	F_n
241.19.16.020	16	6.3	20	1818	2.2	1	1.2	4000	3	5454
241.19.16.035	16	6.3	35	1000	4	1.8	2.2	4000	5.5	5500
241.19.16.050	16	6.3	50	615	6.5	2.5	4	3998	8	4920
241.19.16.075	16	6.3	75	400	10	3.8	6.2	4000	12.5	5000
241.19.16.100	16	6.3	100	286	14	5	9	4004	16.3	4662
241.19.19.025	19	8	25	2400	2.5	1.2	1.2	6000	3.4	8160
241.19.19.040	19	8	40	1333	4.5	2	2.5	5998	5.9	7865
241.19.19.050	19	8	50	1000	6	2.5	3.5	6000	7.8	7800
241.19.19.075	19	8	75	600	10	3.8	6.2	6000	12.4	7440
241.19.19.100	19	8	100	429	14	5	9	6006	16.5	7078
241.19.25.030	25	10	30	4800	2.5	1.5	1	12000	3	14400
241.19.25.050	25	10	50	2400	5	2.5	2.5	12000	5.9	14160
241.19.25.075	25	10	75	1500	8	3.8	4.2	12000	9.5	14250
241.19.25.100	25	10	100	1000	12	5	7	12000	14.7	14700
241.19.25.125	25	10	125	857	14	6.2	7.8	11998	16.9	14483
241.19.32.035	32	12.5	35	6667	3	1.8	1.2	20001	3.7	24668
241.19.32.050	32	12.5	50	3636	5.5	2.5	3	19998	6.3	22907
241.19.32.075	32	12.5	75	2222	9	3.8	5.2	19998	11.3	25109
241.19.32.100	32	12.5	100	1538	13	5	8	19994	17.9	27530
241.19.32.125	32	12.5	125	1250	16	6.2	9.8	20000	18.3	22875
241.19.32.150	32	12.5	150	1053	19	7.5	11.5	20007	21.7	22850
241.19.38.040	38	16	40	7143	3.5	2	1.5	25000	4.5	32144
241.19.38.050	38	16	50	5000	5	2.5	2.5	25000	5.9	29500
241.19.38.075	38	16	75	2778	9	3.8	5.2	25002	10.4	28891
241.19.38.100	38	16	100	1923	13	5	8	24999	15	28845
241.19.38.150	38	16	150	1316	19	7.5	11.5	25004	22.4	29478
241.19.38.200	38	16	200	926	27	10	17	25002	29.9	27687

Round wire compression spring



241.02.

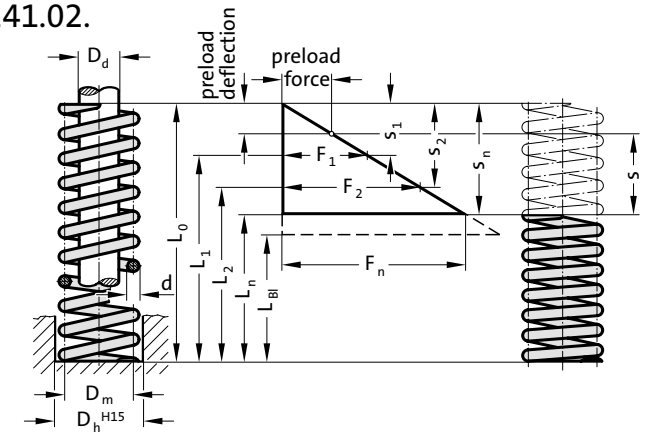

Material:

Spring steel wire class C DIN 17.223 sheet 1, drawn and patented.
For highly stressed compression springs and for loads both static and oscillating.
Manufacturing tolerances to DIN 2095 class 2, load-stabilized.
Max. working temperature 100 °C.

Execution:

Flattened and ground end coils, surface homogenized byball-shot, oiled.

Note:

All spring sizes listed also available in “making-up-”lengths of 500 mm. When ordering these, please add “500” at the end of the order number – e. g. 241.02.11.040.500.
D_h = diameter of guide sleeve
D_m = mean coil diameter
D_d = diameter of guide pin
d = diameter of spring wire
L_0 = free length of spring
L_1...L_n = lengths of loaded spring as related to spring forces F_1...F_n
R = spring rate [N/mm]
L_{Bl} = length of compacted spring (i.-e. wire-to-wire)
F_1...F_n = forces [N] as related to lengths of spring L_1...L_n
s_1...s_n = deflection as related to spring forces F_1...F_n
i_f = number of active coilss = working stroke of spring – i. e. working deflection

241.02. Round wire compression spring

								Spring force [N]								
Order No	D_h	D_d	D_m	d	L_0	R	s_1	initial*	l_1	s_2	F_2 [N]**	l_2	s_n	F_n [N]***	L_n	i_f
241.02.11.040	11	6.5	8.5	1.5	40	8.08	11.3	91	28.7	13.7	110	26.3	16.1	130	23.9	10.5
241.02.13.055	13	8.5	10.5	1.5	55	3.8	20.8	79	34.2	25.2	95	29.8	29.7	112	25.3	12
241.02.15.040	15	9.5	12	2	40	11.93	12.3	146	27.7	15	178	25	17.6	210	22.4	8
241.02.15.050	15	9.5	12	2	50	10	17.5	175	32.5	21.2	212	28.8	25	250	25	9.5
241.02.16.040	16	10.5	13	2	40	11	14	154	26	17	187	23	20	220	20	7
241.02.18.085	18	12	14.75	2.25	85	5.92	30.8	182	54.2	37.4	221	47.6	44	260	41	14
241.02.19.045	19	11	14.5	3	45	35	9.8	343	35.2	11.9	416	33.1	14	490	31	8
241.02.19.050	19	11	14.5	3	50	30	11.2	336	38.8	13.6	408	36.4	16	480	34	8.5
241.02.19.083	19.5	9	14	4	83	75	12.6	945	70.4	15.3	1147	67.7	18	1350	65	16
241.02.20.035	20.5	10	15	4	35	170	5.6	952	29.4	6.8	1156	28.2	8	1360	27	4.5
241.02.20.090	20.5	9	14.5	4.5	90	97.8	12.3	1202	77.7	15	1467	75	17.6	1714	72.4	4
241.02.21.035	21	13.5	17	2.5	35	13.32	10.5	139	24.5	12.7	169	22.3	15	200	20	6
241.02.21.040	21	12	16.25	3	40	32.1	9.8	314	30.2	11.9	381	28.1	14	450	26	5.5
241.02.22.095	22	14.5	18	2.5	95	4.1	34.2	140	60.8	41.5	170	53.5	48.8	200	46.2	17
241.02.22.040	22.5	12	17	4	40	105.5	7.7	812	32.3	9.3	981	30.7	11	1160	29	5
241.02.23.045	23	14.5	18.5	3	45	25.7	15	385	30	18.2	467	26.8	21.4	550	23.6	5
241.02.23.050	23	12.5	17.5	4	50	74.3	11	817	39	13.3	988	36.7	15.6	1160	34.4	6.5
241.02.26.024	26.5	16	21	4	24	133.2	5	666	19	6.1	812	17.9	7.2	960	16.8	2
241.02.30.070	30	13	20.8	7	70	341	7.7	2625	62.3	9.3	3171	60.7	11	3750	59	8
241.02.32.070	32	21	26	4	70	24.2	23.8	575	46.2	28.9	700	41.1	34	822	36	6
241.02.32.150	32	16	23.5	6.5	150	103.6	19.6	2030	130.4	23.8	2465	126	28	2900	122	14
241.02.34.125	34	19	26	6	125	67.2	22.4	1505	102.6	27.2	1827	97.8	32	2150	93	11.5
241.02.44.130	44	25	34	8	130	108.2	25.2	2726	104.8	30.6	3310	99.4	36	3895	94	10
241.02.44.200	44	25	34	8	200	62.7	43.4	2721	156.6	52.7	3304	147.3	62	3887	137.7	17
241.02.48.067	48	25	36	10	67	640	6.3	4032	60.7	7.6	4864	59.4	9	5760	58	3.5
241.02.49.050	49	29	38.5	8.5	50	337	7.7	2594	42.3	9.3	3134	40.7	11	3707	39	2.5
241.02.55.200	55	30	42	11	200	157	30.1	4725	169.9	36.6	5746	163.4	43	6750	157	13
241.02.58.050	58	39	48	8	50	151.2	9.8	1481	40.2	11.9	1799	38.1	14	2117	36	2.5
241.02.63.180	63	38	50	11	180	121	30.1	3642	149.9	36.6	4428	143.4	43	5203	137	10

*= long spring life; ** = medium spring life; *** = max. spring loading

subject to alterations

Disc spring DIN 2093

242.01.

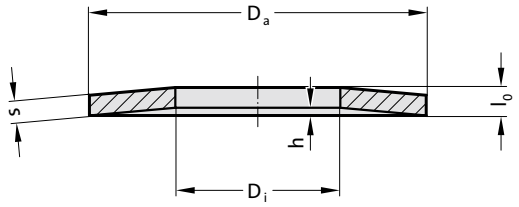

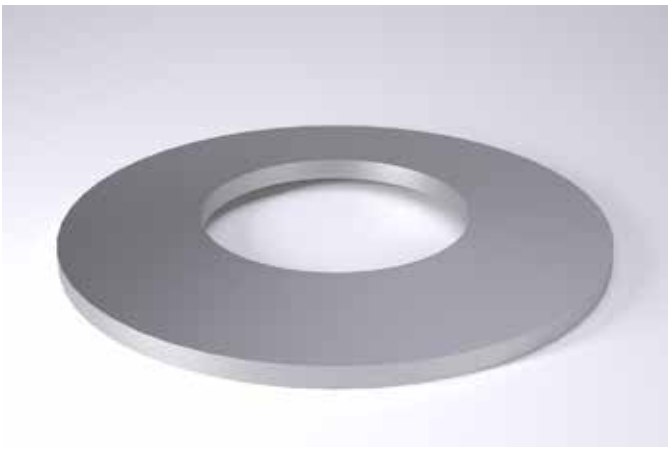

Material:

50 CrV 4 Vanadium Spring Steel

Note:

FIBRO Disc Springs 242.01. are made from 50 CrV 4 premier grade spring steel.This “classic” spring material guarantes optimal performance levels within the temperature range from –15 °C to +150 °C. “Hot pressetting” allows working temperatures from –25 °C to +200 °C.

D_a = outside diameter of spring
D_i = diameter of hole
s = crossectional thickness of spring
h = concavity of free spring
l_0 =total height of free spring
f = deflection of spring, caused by load F
F = load F [N], causing deflection f

242.01. Disc spring DIN 2093

Order No	in accord. with DIN 2093 series	D_a h12	D_i H12	s	h	l_0	f_1= 0,2 h	F_1 [N]	f_2= 0,4 h	F_2 [N]	f_3= 0,6 h	F_3 [N]	f_4= 0,7 h	F_4 [N]	f_5= 0,8 h	F_5 [N]
242.01.080.032.040		8	3.2	0.4	0.2	0.6	0.04	58	0.08	110	0.12	160	0.14	180	0.16	200
242.01.100.052.040	B	10	5.2	0.4	0.3	0.7	0.06	73	0.12	134	0.18	180	0.21	200	0.24	220
242.01.125.062.050	B	12.5	6.2	0.5	0.35	0.85	0.07	100	0.14	180	0.21	250	0.24	280	0.28	310
242.01.140.072.080	A	14	7.2	0.8	0.3	1.1	0.06	230	0.12	450	0.18	660	0.21	770	0.24	870
242.01.150.052.070		15	5.2	0.7	0.4	1.1	0.08	180	0.16	340	0.24	470	0.28	540	0.32	610
242.01.160.082.060	B	16	8.2	0.6	0.45	1.05	0.09	145	0.18	260	0.27	360	0.31	400	0.36	440
242.01.160.082.090	A	16	8.2	0.9	0.35	1.25	0.07	300	0.14	580	0.21	850	0.24	970	0.28	1100
242.01.180.092.100	A	18	9.2	1	0.4	1.4	0.08	370	0.16	720	0.24	1050	0.28	1200	0.32	1350
242.01.200.102.080	B	20	10.2	0.8	0.55	1.35	0.11	250	0.22	470	0.33	650	0.38	730	0.44	800
242.01.200.102.090		20	10.2	0.9	0.55	1.45	0.11	340	0.22	640	0.33	900	0.38	1000	0.44	1150
242.01.200.102.110	A	20	10.2	1.1	0.45	1.55	0.09	450	0.18	870	0.27	1350	0.31	1450	0.36	1650
242.01.230.122.125		23	12.2	1.25	0.6	1.85	0.12	710	0.24	1360	0.36	1960	0.42	2240	0.48	2520
242.01.250.122.150	A	25	12.2	1.5	0.55	2.05	0.11	860	0.22	1650	0.33	2450	0.38	2800	0.44	3100
242.01.250.122.100		25	12.2	1	0.6	1.6	0.12	320	0.24	600	0.36	840	0.42	950	0.48	1050
242.01.280.142.100	B	28	14.2	1	0.8	1.8	0.16	400	0.32	720	0.48	970	0.56	1100	0.64	1200
242.01.280.142.150	A	28	14.2	1.5	0.65	2.15	0.13	850	0.26	1650	0.39	2400	0.45	2700	0.52	3100
242.01.315.163.125	B	31.5	16.3	1.25	0.9	2.15	0.18	660	0.36	1200	0.54	1650	0.63	1850	0.72	2000
242.01.315.163.175	A	31.5	16.3	1.75	0.7	2.45	0.14	1150	0.28	2200	0.42	3200	0.49	3700	0.56	4200
242.01.355.183.200	A	35.5	18.3	2	0.8	2.8	0.16	1550	0.32	3000	0.48	4300	0.56	5000	0.64	5600
242.01.400.142.150		40	14.2	1.5	1.25	2.75	0.25	950	0.5	1700	0.75	2200	0.87	2500	1	2700
242.01.400.204.225	A	40	20.4	2.25	0.9	3.15	0.18	1900	0.36	3700	0.54	5400	0.63	5200	0.72	7000
242.01.450.224.250	A	45	22.4	2.5	1	3.5	0.2	2300	0.4	4500	0.6	6400	0.7	7400	0.8	8500
242.01.500.183.150		50	18.3	1.5	1.8	3.3	0.36	1200	0.72	2000	1.08	2400	1.26	2600	1.44	2700
242.01.500.254.250		50	25.4	2.5	1.4	3.9	0.28	2850	0.56	5350	0.84	7600	0.98	8650	1.12	9650
242.01.500.254.300	A	50	25.4	3	1.1	4.1	0.22	3500	0.44	6800	0.66	10000	0.77	11500	0.88	13000
242.01.560.285.200	B	56	28.5	2	1.6	3.6	0.32	1600	0.64	2900	0.96	3900	1.12	4300	1.28	4700
242.01.600.204.200		60	20.4	2	2.1	4.1	0.42	2000	0.84	3400	1.26	4300	1.47	4700	1.68	5000

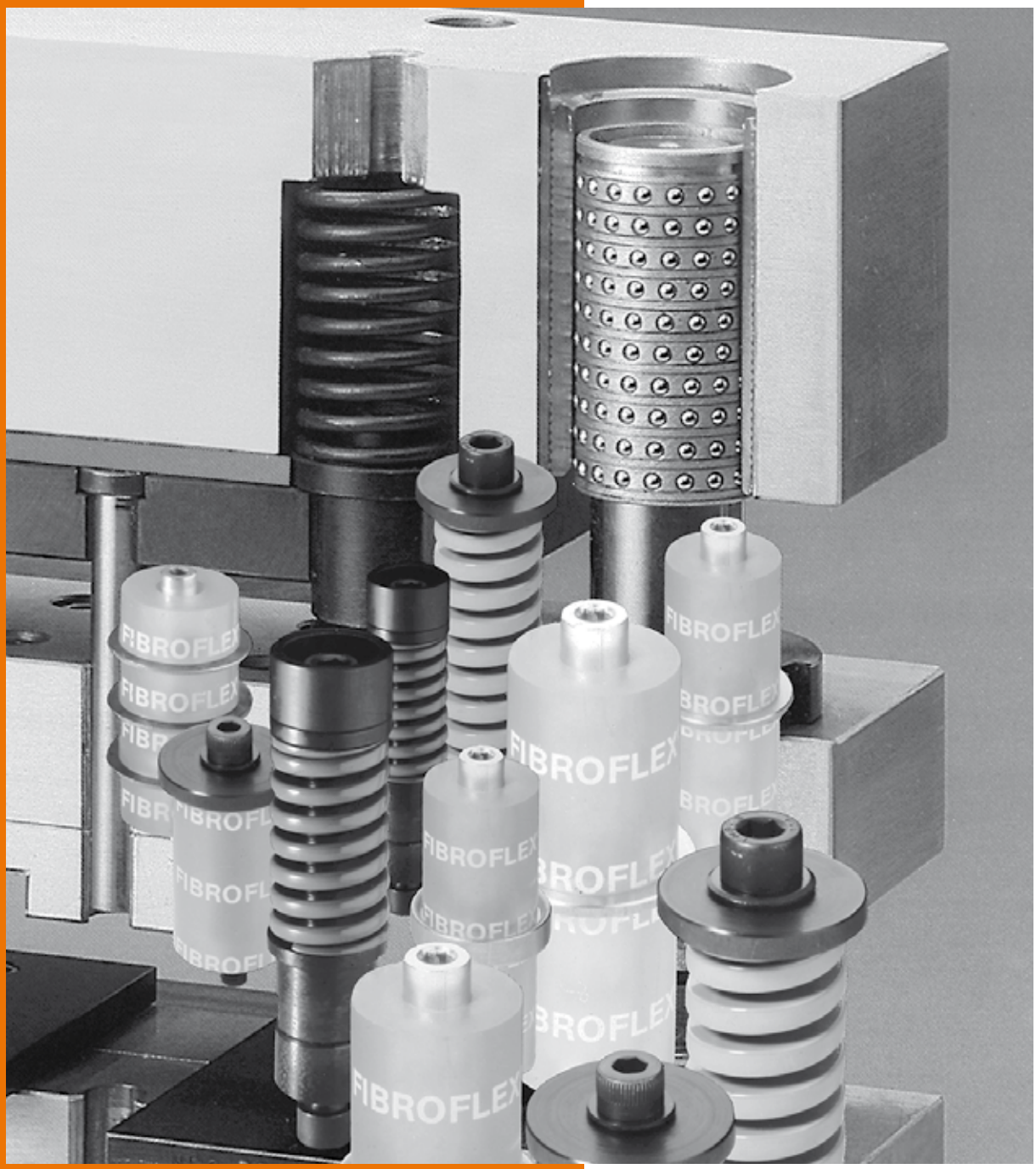

Elastomer Springs
Spring and spacer units
Accessories

FIBROFLEX®-Elastomer spring for FIBROFLEX®-Spring system



Mounting example

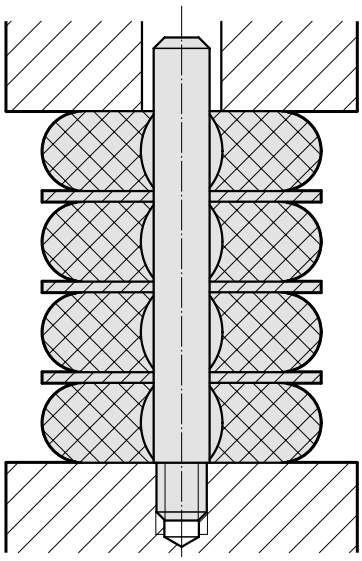

244.1.

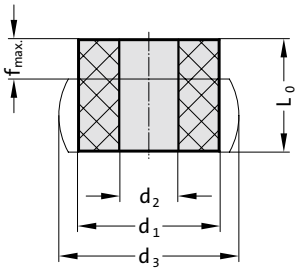

Description:

FIBROFLEX® Spring Systems represent a finely graded range of elastomer spring units (material: polyurethane) exhibiting particular suitability for all stamping dies and related tools.

The 244.-Systems comprise FIBROFLEX® Spring Elements 244.1., available in three Shore hardnesses. With the aid of Stacking Washers 244.4. and Guide Pins 244.5., the elements can be stacked.
Note that stacking with interposed stacking washers results in the addition of the individual spring deflections – without addition of the spring forces.

Note:

Physical and chemical properties of FIBROFLEX®-Elastomer – see at the beginning of Chapter G.
Dowel pins (235./2351.1.) or guide pins (244.5.), recommended for stacks higher than 1,5 x d_2.

244.1. FIBROFLEX®-Elastomer spring for FIBROFLEX®-Spring system

Order No	Spring rate	d_1	d_2	d_3	L_0	f max.	F max. [N]
244.1.16.5	80 Shore A	16	6.5	20	7.5	2.6	1060
244.1.20.5	80 Shore A	20	8.5	26	10	3.5	1580
244.1.25.5	80 Shore A	25	10.5	32	12.5	4.3	2670
244.1.32.5	80 Shore A	32	13.5	40	15	5.2	4500
244.1.40.5	80 Shore A	40	13.5	50	17.5	6.1	7200
244.1.16.6	90 Shore A	16	6.5	20	7.5	2.2	1900
244.1.20.6	90 Shore A	20	8.5	26	10	3	2650
244.1.25.6	90 Shore A	25	10.5	32	12.5	3.7	4400
244.1.32.6	90 Shore A	32	13.5	40	15	4.5	6550
244.1.40.6	90 Shore A	40	13.5	50	17.5	5.2	11200
244.1.16.7	95 Shore A	16	6.5	20	7.5	1.9	2500
244.1.20.7	95 Shore A	20	8.5	26	10	2.5	3500
244.1.25.7	95 Shore A	25	10.5	32	12.5	3.1	4500
244.1.32.7	95 Shore A	32	13.5	40	15	3.9	7800
244.1.40.7	95 Shore A	40	13.5	50	17.5	4.4	13500

subject to alterations

FIBROFLEX®-Elastomer spring for FIBROFLEX®-Spring system

244.1.16. – Ø 16

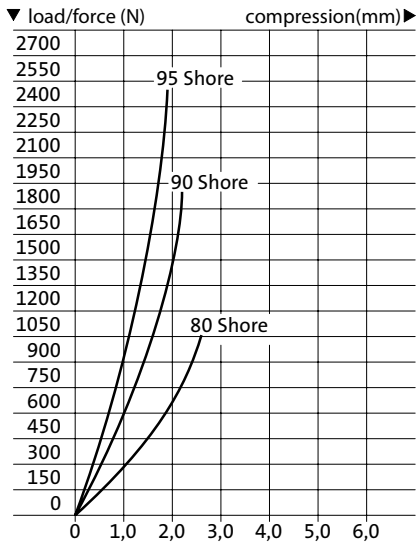

244.1.20. – Ø 20

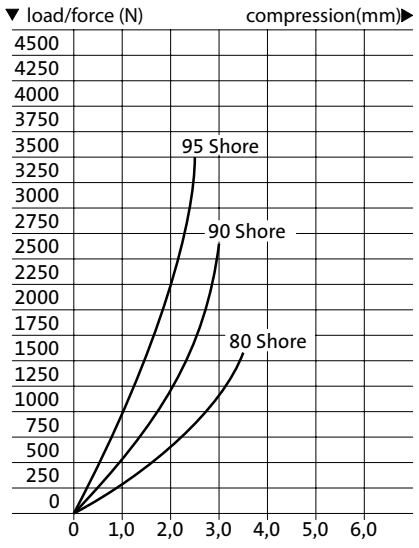

244.1.25. – Ø 25

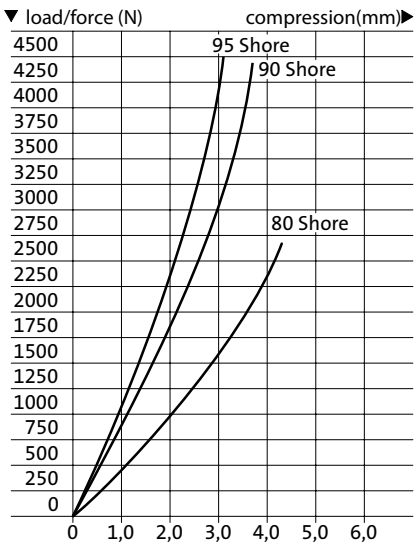

244.1.32. – Ø 32

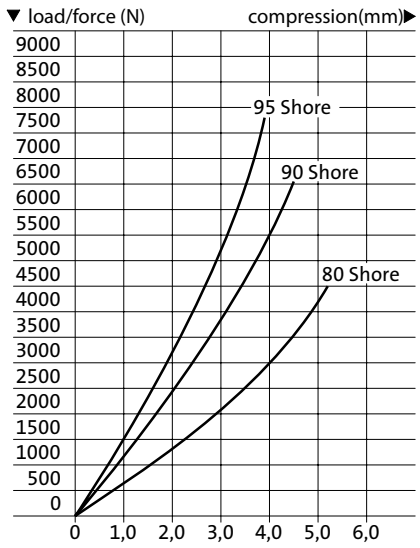

244.1.40. – Ø 40

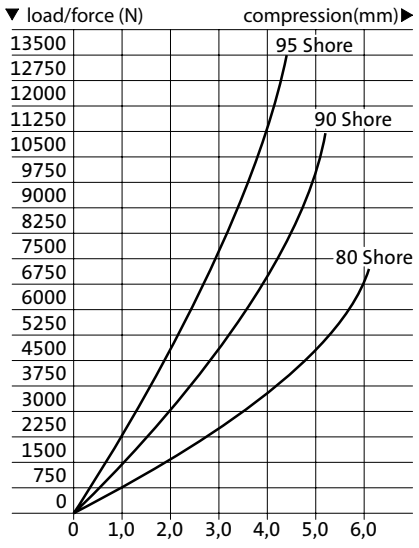

FIBROFLEX®-Tubular spring element 80 Shore A, to DIN ISO 10069-1



246.5.

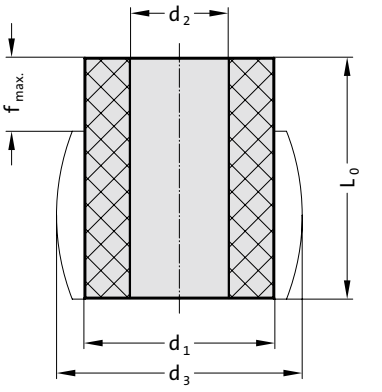

Description:

FIBROFLEX® Spring Elements are made from highly elastic polyurethane elastomers. Shore hardness is the most significant rating of the various FIBROFLEX® elements. Shore hardness ratings are symbolized by distinctive colour coding.
Correct selection of Shore hardness has a fundamental bearing on the success of FIBROFLEX®-applications.

Material:

Polyurethan 80 Shore A
Colour: green

Note:

The physical properties of polyurethane elastomers means that they have a tendency to settle. The extent of such settlement is dependent on the internal heat of friction, speed and number of load changes, the spring travel and the Shore hardness.
Settlement may be as much as 4 to 7% of the spring length L_0.

246.5. FIBROFLEX®-Tubular spring element 80 Shore A, to DIN ISO 10069-1

Order No	d_1	L_0	d_2	d_3	f max.	F max. [N]
246.5.016.012	16	12.5	6.5	21	4.3	1020
246.5.016.016	16	16	6.5	21	5.6	980
246.5.016.020	16	20	6.5	21	7	950
246.5.016.025	16	25	6.5	21	8.7	940
246.5.020.016	20	16	8.5	26	5.6	1530
246.5.020.020	20	20	8.5	26	7	1510
246.5.020.025	20	25	8.5	26	8.7	1500
246.5.020.032	20	32	8.5	26	10.6	1490
246.5.025.020	25	20	10.5	32	7	2600
246.5.025.025	25	25	10.5	32	8.7	2550
246.5.025.032	25	32	10.5	32	10.6	2520
246.5.025.040	25	40	10.5	32	14	2500
246.5.032.032	32	32	13.5	42	10.6	3900
246.5.032.040	32	40	13.5	42	14	3850
246.5.032.050	32	50	13.5	42	17.5	3820
246.5.032.063	32	63	13.5	42	22	3800
246.5.040.032	40	32	13.5	52	10.6	6700
246.5.040.040	40	40	13.5	52	14	6600
246.5.040.050	40	50	13.5	52	17.5	6550
246.5.040.063	40	63	13.5	52	22	6500
246.5.040.080	40	80	13.5	52	28	6480
246.5.050.032	50	32	17	65	10.6	10800
246.5.050.040	50	40	17	65	14	10400
246.5.050.050	50	50	17	65	17.5	10200
246.5.050.063	50	63	17	65	22	10000
246.5.050.080	50	80	17	65	28	9950
246.5.050.100	50	100	17	65	35	9900
246.5.063.032	63	32	17	81	11.2	18650
246.5.063.040	63	40	17	81	14	18000
246.5.063.050	63	50	17	81	17.5	17500
246.5.063.063	63	63	17	81	22	17000
246.5.063.080	63	80	17	81	28	16500
246.5.063.100	63	100	17	81	35	16200
246.5.063.125	63	125	17	81	43.7	16000
246.5.080.032	80	32	21	104	11.2	31500
246.5.080.040	80	40	21	104	14	30100
246.5.080.050	80	50	21	104	17.5	29900
246.5.080.063	80	63	21	104	22	28800
246.5.080.080	80	80	21	104	28	28300
246.5.080.100	80	100	21	104	35	28100
246.5.080.125	80	125	21	104	43.7	28000
246.5.100.032	100	32	21	130	10.6	56000
246.5.100.040	100	40	21	130	14	52000
246.5.100.050	100	50	21	130	17.5	50000
246.5.100.063	100	63	21	130	22	47500
246.5.100.080	100	80	21	130	28	45000
246.5.100.100	100	100	21	130	35	43300
246.5.100.125	100	125	21	130	43.7	41500
246.5.125.032	125	32	27	160	10.6	92000
246.5.125.040	125	40	27	160	14	85000
246.5.125.050	125	50	27	160	17.5	80000
246.5.125.063	125	63	27	160	22	75000
246.5.125.080	125	80	27	160	28	71000
246.5.125.100	125	100	27	160	35	70500
246.5.125.125	125	125	27	160	43.7	70000
246.5.125.160	125	160	27	160	56	68000

246.5.016.
Ø 16/80 Shore A

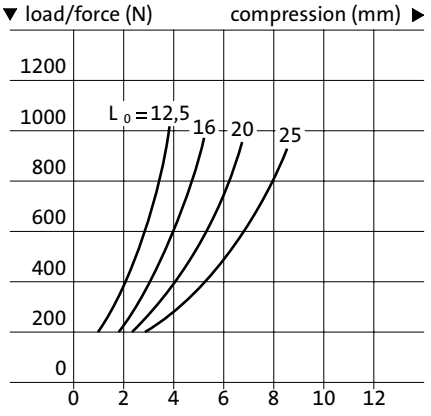

subject to alterations

FIBROFLEX®-Tubular Spring Elements 80 Shore A

246.5.020.
Ø 20/80 Shore A

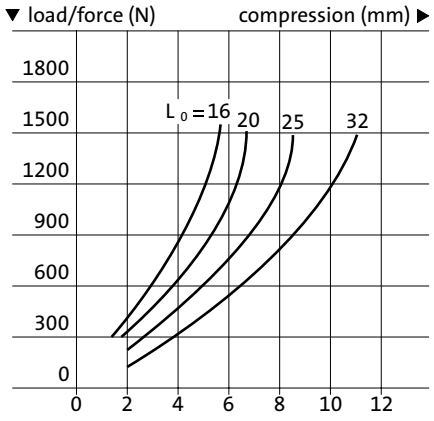

246.5.025.
Ø 25/80 Shore A

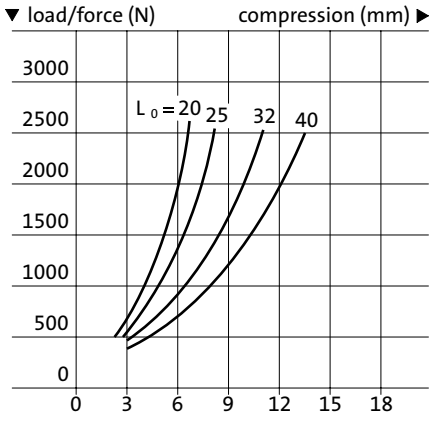

246.5.032.
Ø 32/80 Shore A

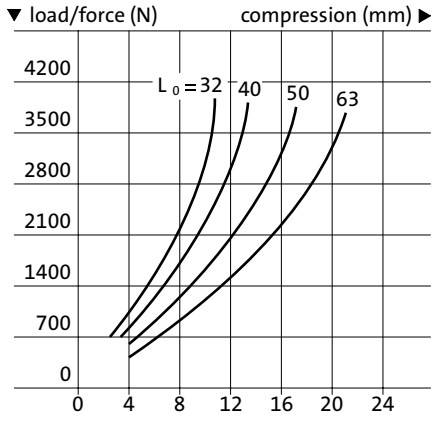

246.5.040.
Ø 40/80 Shore A

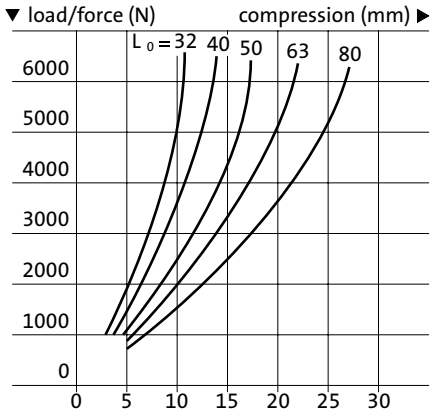

246.5.050.
Ø 50/80 Shore A

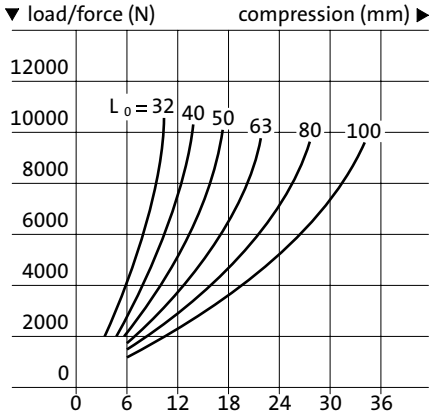

246.5.063.
Ø 63/80 Shore A

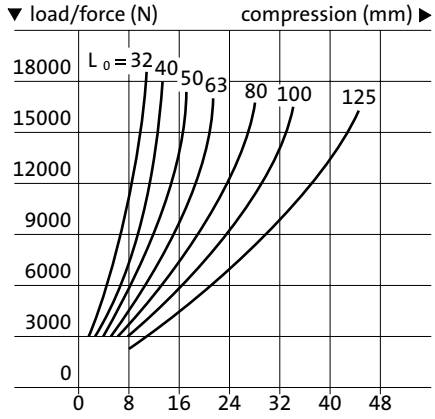

246.5.080.
Ø 80/80 Shore A

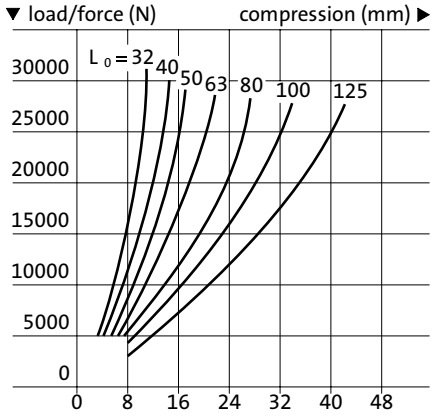

246.5.100.
Ø 100/80 Shore A

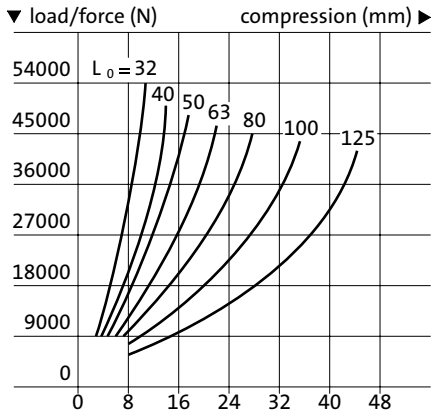

246.5.125.
Ø 125/80 Shore A

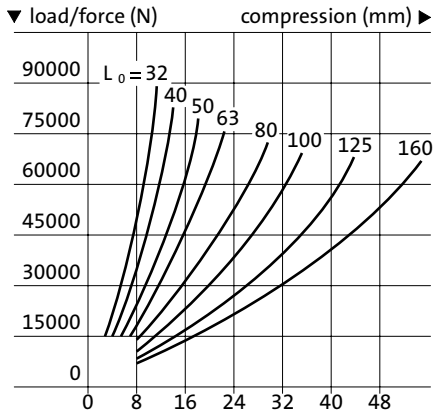

FIBROFLEX®-Tubular spring element 90 Shore A, to DIN ISO 10069-1



246.6.

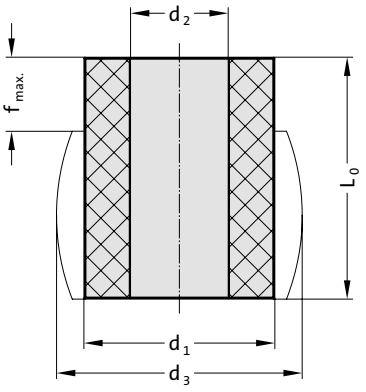

Description:

FIBROFLEX® Spring Elements are made from highly elastic polyurethane elastomers. Shore hardness is the most significant rating of the various FIBROFLEX® elements. Shore hardness ratings are symbolized by distinctive colour coding.
Correct selection of Shore hardness has a fundamental bearing on the success of FIBROFLEX®-applications.

Material:

Polyurethan 90 Shore A
Colour: yellow

Note:

The physical properties of polyurethane elastomers means that they have a tendency to settle. The extent of such settlement is dependent on the internal heat of friction, speed and number of load changes, the spring travel and the Shore hardness.
Settlement may be as much as 4 to 7% of the spring length L_0.

246.6. FIBROFLEX®-Tubular spring element 90 Shore A, to DIN ISO 10069-1

Order No	d_1	L_0	d_2	d_3	f max.	F max. [N]
246.6.016.012	16	12.5	6.5	21	3.6	1680
246.6.016.016	16	16	6.5	21	4.8	1650
246.6.016.020	16	20	6.5	21	6	1620
246.6.016.025	16	25	6.5	21	7.5	1580
246.6.020.016	20	16	8.5	26	4.8	2600
246.6.020.020	20	20	8.5	26	6	2550
246.6.020.025	20	25	8.5	26	7.5	2530
246.6.020.032	20	32	8.5	26	9.6	2500
246.6.025.020	25	20	10.5	32	6	4300
246.6.025.025	25	25	10.5	32	7.5	4200
246.6.025.032	25	32	10.5	32	9.6	4150
246.6.025.040	25	40	10.5	32	12	4120
246.6.032.032	32	32	13.5	42	9.6	6400
246.6.032.040	32	40	13.5	42	12	6350
246.6.032.050	32	50	13.5	42	15	6300
246.6.032.063	32	63	13.5	42	18.9	6250
246.6.040.032	40	32	13.5	52	9.6	11000
246.6.040.040	40	40	13.5	52	12	10900
246.6.040.050	40	50	13.5	52	15	10800
246.6.040.063	40	63	13.5	52	18.9	10750
246.6.040.080	40	80	13.5	52	24	10700
246.6.050.032	50	32	17	65	9.6	17400
246.6.050.040	50	40	17	65	12	17300
246.6.050.050	50	50	17	65	15	17000
246.6.050.063	50	63	17	65	18.9	16650
246.6.050.080	50	80	17	65	24	16500
246.6.050.100	50	100	17	65	30	16400
246.6.063.032	63	32	17	81	9.6	30100
246.6.063.040	63	40	17	81	12	29500
246.6.063.050	63	50	17	81	15	28900
246.6.063.063	63	63	17	81	18.9	28000
246.6.063.080	63	80	17	81	24	27500
246.6.063.100	63	100	17	81	30	27300
246.6.063.125	63	125	17	81	37.5	26800
246.6.080.032	80	32	21	104	9.6	53000
246.6.080.040	80	40	21	104	12	50500
246.6.080.050	80	50	21	104	15	48000
246.6.080.063	80	63	21	104	18.9	46500
246.6.080.080	80	80	21	104	24	45500
246.6.080.100	80	100	21	104	30	44900
246.6.080.125	80	125	21	104	37.5	44000
246.6.100.032	100	32	21	130	9.6	90000
246.6.100.040	100	40	21	130	12	84800
246.6.100.050	100	50	21	130	15	81000
246.6.100.063	100	63	21	130	18.9	78000
246.6.100.080	100	80	21	130	24	75000
246.6.100.100	100	100	21	130	30	73000
246.6.100.125	100	125	21	130	37.5	71000
246.6.125.032	125	32	27	160	9.6	150000
246.6.125.040	125	40	27	160	12	142500
246.6.125.050	125	50	27	160	15	132000
246.6.125.063	125	63	27	160	18.9	125000
246.6.125.080	125	80	27	160	24	118000
246.6.125.100	125	100	27	160	30	115000
246.6.125.125	125	125	27	160	37.5	113000
246.6.125.160	125	160	27	160	48	111300

246.6.016.
Ø 16/90 Shore A

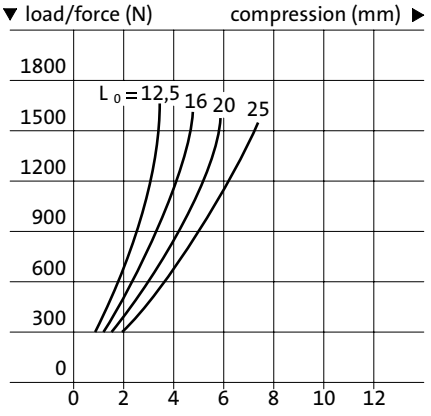

subject to alterations

FIBROFLEX®-Tubular Spring Elements 90 Shore A

246.6.020.
Ø 20/90 Shore A

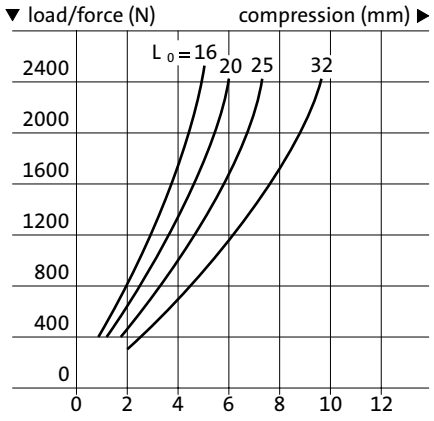

246.6.025.
Ø 25/90 Shore A

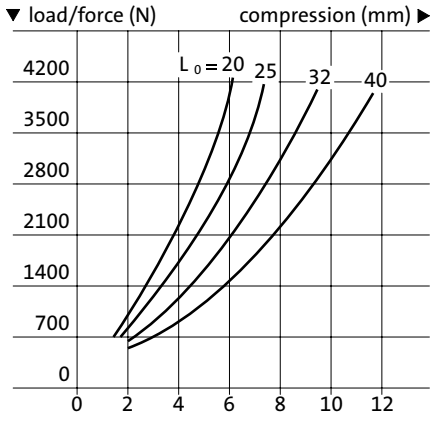

246.6.032.
Ø 32/90 Shore A

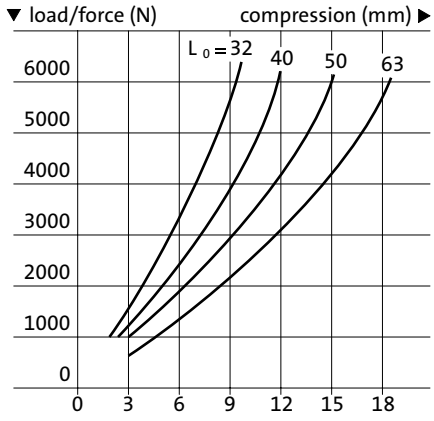

246.6.040.
Ø 40/90 Shore A

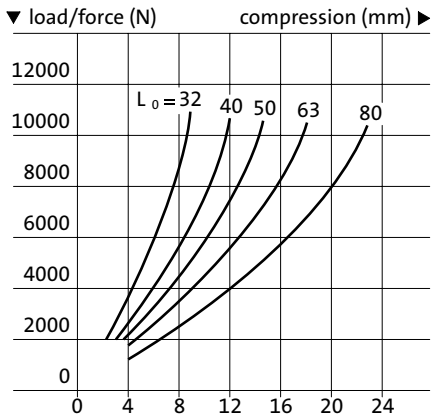

246.6.050.
Ø 50/90 Shore A

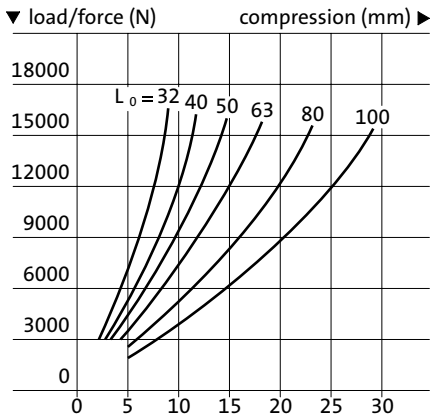

246.6.063.
Ø 63/90 Shore A

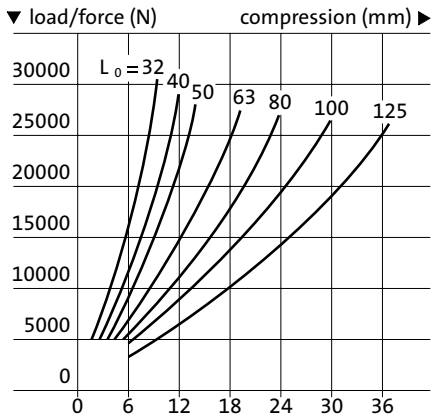

246.6.080.
Ø 80/90 Shore A

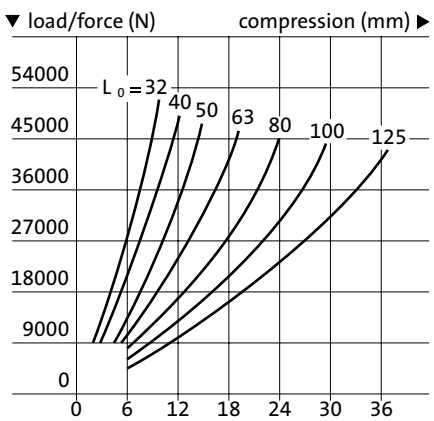

246.6.100.
Ø 100/90 Shore A

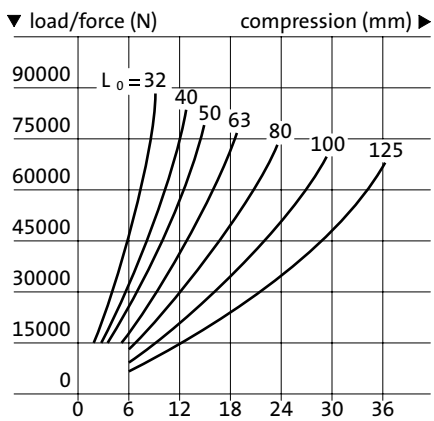

246.6.125.
Ø 125/90 Shore A

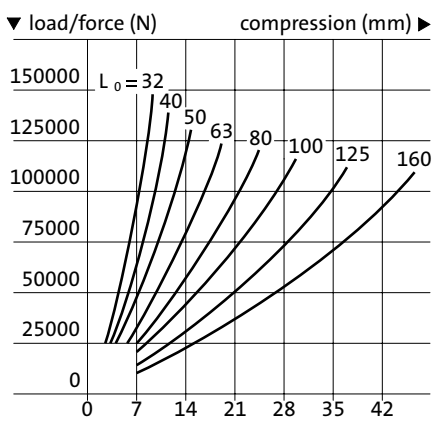

FIBROFLEX®-Tubular spring element 95 Shore A, to DIN ISO 10069-1



246.7.

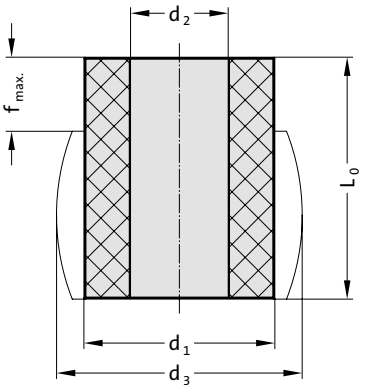

Description:

FIBROFLEX® Spring Elements are made from highly elastic polyurethane elastomers. Shore hardness is the most significant rating of the various FIBROFLEX® elements. Shore hardness ratings are symbolized by distinctive colour coding.
Correct selection of Shore hardness has a fundamental bearing on the success of FIBROFLEX®-applications.

Material:

Polyurethan 95 Shore A
Colour: red

Note:

The physical properties of polyurethane elastomers means that they have a tendency to settle. The extent of such settlement is dependent on the internal heat of friction, speed and number of load changes, the spring travel and the Shore hardness.
Settlement may be as much as 4 to 7% of the spring length L_0.

246.7. FIBROFLEX®-Tubular spring element 95 Shore A, to DIN ISO 10069-1

Order No	d_1	L_0	d_2	d_3	f max.	F max. [N]
246.7.016.012	16	12.5	6.5	21	3.1	2000
246.7.016.016	16	16	6.5	21	4	1920
246.7.016.020	16	20	6.5	21	5	1900
246.7.016.025	16	25	6.5	21	6.2	1870
246.7.020.016	20	16	8.5	26	4	3050
246.7.020.020	20	20	8.5	26	5	3000
246.7.020.025	20	25	8.5	26	6.2	2980
246.7.020.032	20	32	8.5	26	8	2950
246.7.025.020	25	20	10.5	32	5	5100
246.7.025.025	25	25	10.5	32	6.2	5080
246.7.025.032	25	32	10.5	32	8	5020
246.7.025.040	25	40	10.5	32	10	5000
246.7.032.032	32	32	13.5	42	8	7600
246.7.032.040	32	40	13.5	42	10	7500
246.7.032.050	32	50	13.5	42	12	7480
246.7.032.063	32	63	13.5	42	15.7	7450
246.7.040.032	40	32	13.5	52	8	13000
246.7.040.040	40	40	13.5	52	10	12700
246.7.040.050	40	50	13.5	52	12.5	12500
246.7.040.063	40	63	13.5	52	15.7	12450
246.7.040.080	40	80	13.5	52	20	12430
246.7.050.032	50	32	17	65	8	21000
246.7.050.040	50	40	17	65	10	20100
246.7.050.050	50	50	17	65	12.5	19600
246.7.050.063	50	63	17	65	15.7	19200
246.7.050.080	50	80	17	65	20	19100
246.7.050.100	50	100	17	65	25	19050
246.7.063.032	63	32	17	81	8	37000
246.7.063.040	63	40	17	81	10	35900
246.7.063.050	63	50	17	81	12.5	34000
246.7.063.063	63	63	17	81	15.7	33000
246.7.063.080	63	80	17	81	20	32000
246.7.063.100	63	100	17	81	25	31800
246.7.063.125	63	125	17	81	31.2	31600
246.7.080.032	80	32	21	104	8	62500
246.7.080.040	80	40	21	104	10	59000
246.7.080.050	80	50	21	104	12.5	58000
246.7.080.063	80	63	21	104	15.7	55000
246.7.080.080	80	80	21	104	20	54000
246.7.080.100	80	100	21	104	25	53000
246.7.080.125	80	125	21	104	31.2	52000
246.7.100.032	100	32	21	130	8	110000
246.7.100.040	100	40	21	130	10	102500
246.7.100.050	100	50	21	130	12.5	95000
246.7.100.063	100	63	21	130	15.7	92000
246.7.100.080	100	80	21	130	20	89000
246.7.100.100	100	100	21	130	25	87000
246.7.100.125	100	125	21	130	31.2	86000
246.7.125.032	125	32	27	160	8	178000
246.7.125.040	125	40	27	160	10	168000
246.7.125.050	125	50	27	160	12.5	157000
246.7.125.063	125	63	27	160	15.7	150000
246.7.125.080	125	80	27	160	20	142000
246.7.125.100	125	100	27	160	25	135000
246.7.125.125	125	125	27	160	31.2	133000
246.7.125.160	125	160	27	160	40	130000

246.7.016.
Ø 16/95 Shore A

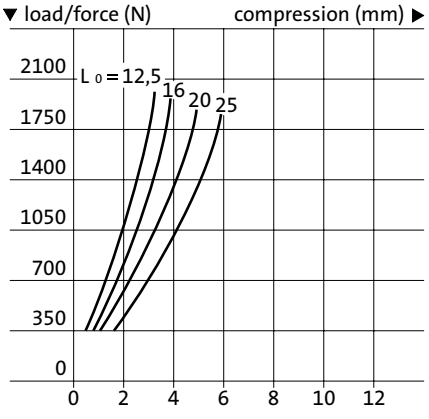

subject to alterations

FIBROFLEX®-Tubular Spring Elements 95 Shore A

246.7.020.
Ø 20/95 Shore A

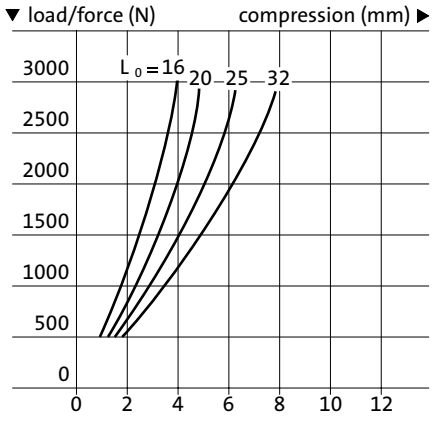

246.7.025.
Ø 25/95 Shore A

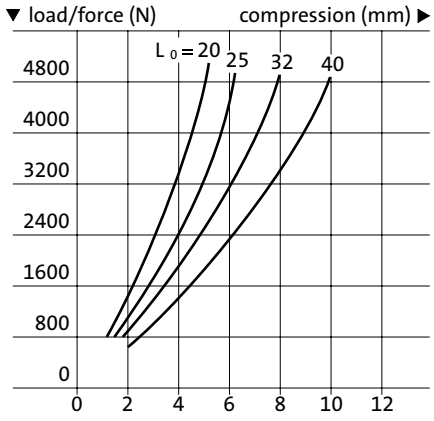

246.7.032.
Ø 32/95 Shore A

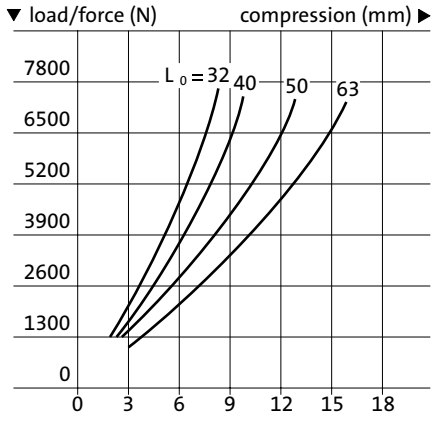

246.7.040.
Ø 40/95 Shore A

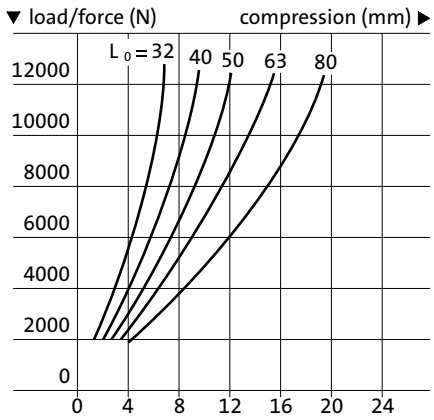

246.7.050.
Ø 50/95 Shore A

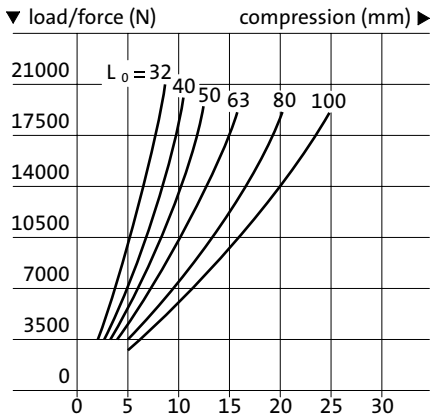

246.7.063.
Ø 63/95 Shore A

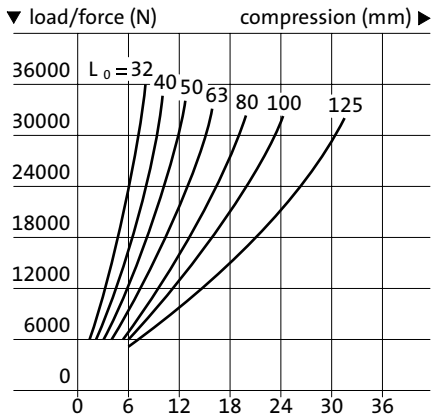

246.7.080.
Ø 80/95 Shore A

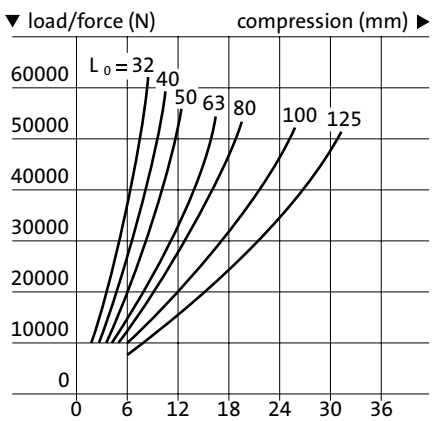

246.7.100.
Ø 100/95 Shore A

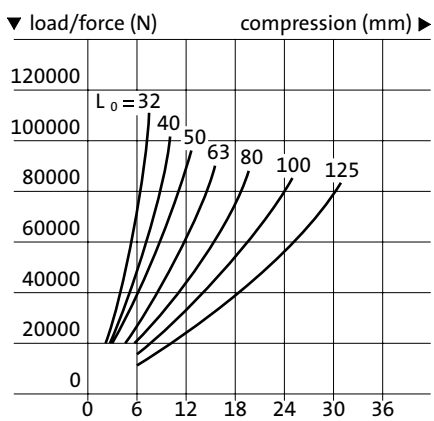

246.7.125.
Ø 125/95 Shore A

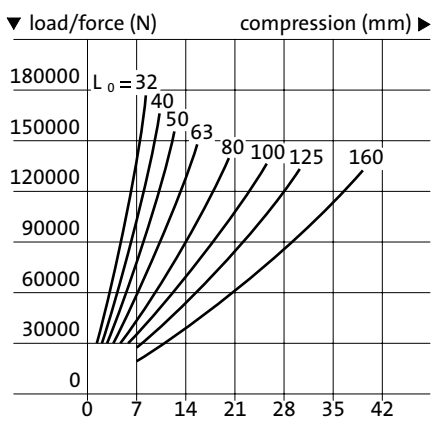

FIBROELAST® Tubular spring element 70 Shore A



2461.4.

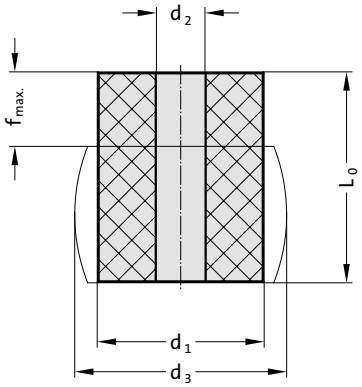

Material:

Polyester-based polyurethane 70 Shore A
Colour: white

Note:

The physical properties of polyurethane elastomers means that they have a tendency to settle. The extent of such settlement is dependent on the internal heat of friction, speed and number of load changes, the spring travel and the Shore hardness.
Settlement may be as much as 4 to 7% of the spring length L_0.

2461.4. FIBROELAST® Tubular spring element 70 Shore A

Order No	d_1	L_0	d_2	d_3	f max.
2461.4.016.012	16	12	6.5	21	4.8
2461.4.016.016	16	16	6.5	21	6.4
2461.4.016.020	16	20	6.5	21	8
2461.4.016.025	16	25	6.5	21	10
2461.4.020.016	20	16	8.5	26	6.4
2461.4.020.020	20	20	8.5	26	8
2461.4.020.025	20	25	8.5	26	10
2461.4.020.032	20	32	8.5	26	12.8
2461.4.025.020	25	20	10.5	32	8
2461.4.025.025	25	25	10.5	32	10
2461.4.025.032	25	32	10.5	32	12.8
2461.4.025.040	25	40	10.5	32	16
2461.4.032.032	32	32	13.5	42	12.8
2461.4.032.040	32	40	13.5	42	16
2461.4.032.050	32	50	13.5	42	20
2461.4.032.063	32	63	13.5	42	25.2
2461.4.040.032	40	32	13.5	52	12.8
2461.4.040.040	40	40	13.5	52	16
2461.4.040.050	40	50	13.5	52	20
2461.4.040.063	40	63	13.5	52	25.2
2461.4.040.080	40	80	13.5	52	32
2461.4.050.032	50	32	17	65	12.8
2461.4.050.040	50	40	17	65	16
2461.4.050.050	50	50	17	65	20
2461.4.050.063	50	63	17	65	25.2
2461.4.050.080	50	80	17	65	32
2461.4.050.100	50	100	17	65	40
2461.4.063.032	63	32	17	81	12.8
2461.4.063.040	63	40	17	81	16
2461.4.063.050	63	50	17	81	20
2461.4.063.063	63	63	17	81	25.2
2461.4.063.080	63	80	17	81	32
2461.4.063.100	63	100	17	81	40
2461.4.063.125	63	125	17	81	50
2461.4.080.032	80	32	21	104	12.8
2461.4.080.040	80	40	21	104	16
2461.4.080.050	80	50	21	104	20
2461.4.080.063	80	63	21	104	25.2
2461.4.080.080	80	80	21	104	32
2461.4.080.100	80	100	21	104	40
2461.4.080.125	80	125	21	104	50
2461.4.100.032	100	32	21	130	12.8
2461.4.100.040	100	40	21	130	16
2461.4.100.050	100	50	21	130	20
2461.4.100.063	100	63	21	130	25.2
2461.4.100.080	100	80	21	130	32
2461.4.100.100	100	100	21	130	40
2461.4.100.125	100	125	21	130	50
2461.4.125.032	125	32	27	160	12.8
2461.4.125.040	125	40	27	160	16
2461.4.125.050	125	50	27	160	20
2461.4.125.063	125	63	27	160	25.2
2461.4.125.080	125	80	27	160	32
2461.4.125.100	125	100	27	160	40
2461.4.125.125	125	125	27	160	50
2461.4.125.160	125	160	27	160	64

2461.4.016.
Ø 16/70 Shore A

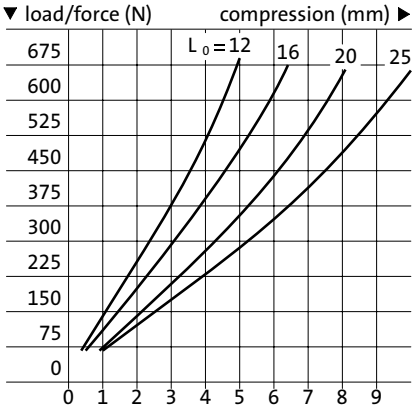

subject to alterations

FIBROELAST®-Tubular Spring Elements 70 Shore A

2461.4.020.
Ø 20/70 Shore A

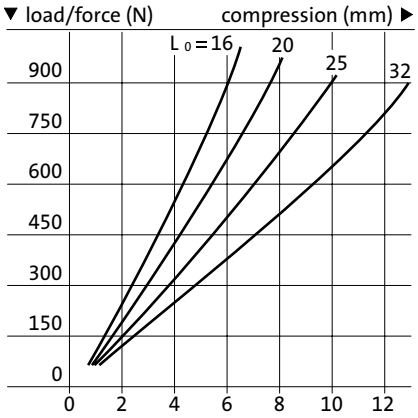

2461.4.025.
Ø 25/70 Shore A

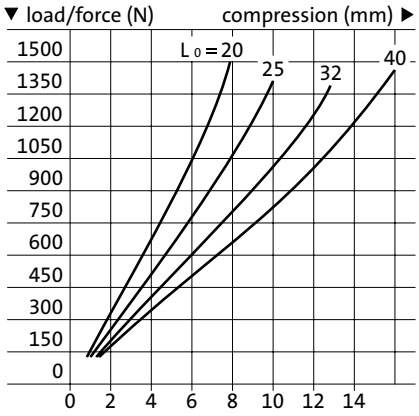

2461.4.032.
Ø 32/70 Shore A

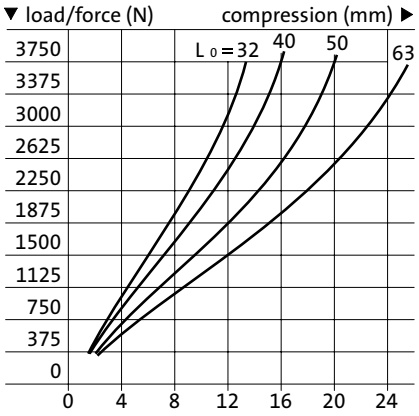

2461.4.040.
Ø 40/70 Shore A

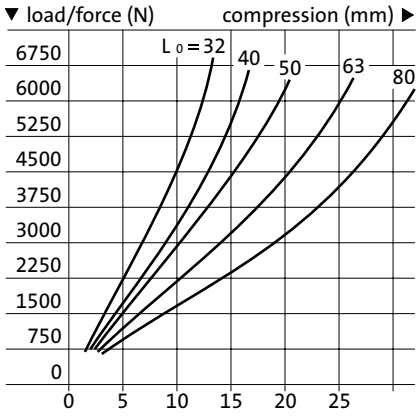

2461.4.050.
Ø 50/70 Shore A

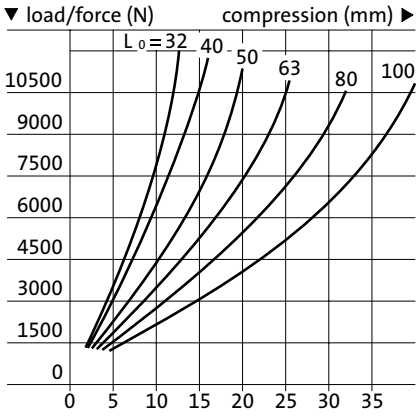

2461.4.063.
Ø 63/70 Shore A

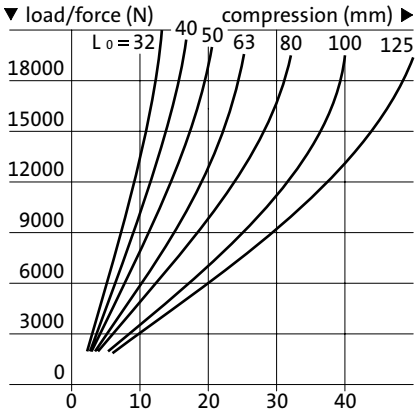

2461.4.080.
Ø 80/70 Shore A

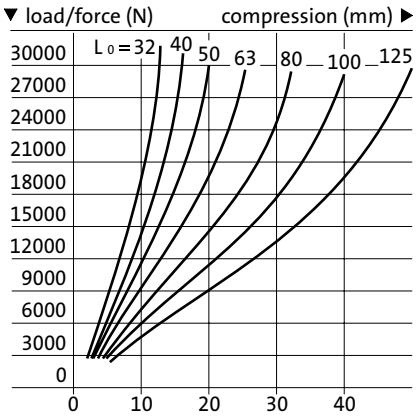

2461.4.100.
Ø 100/70 Shore A

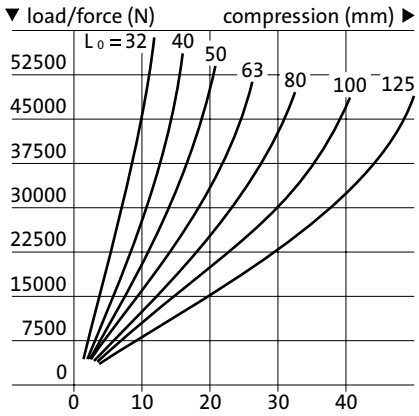

2461.4.125.
Ø 125/70 Shore A

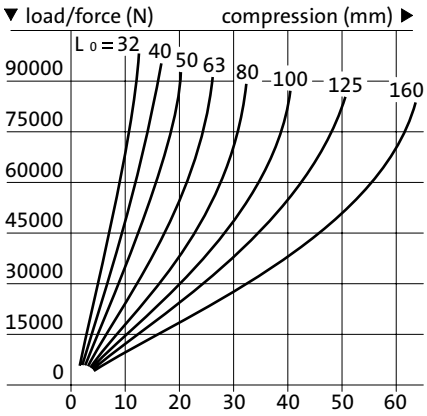

Tubular Spring Element, Rubber 70 Shore A



2461.2.

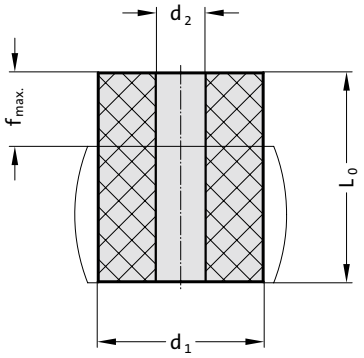

Material:

Chloroprene rubber 70 shore A
Colour: black

Note:

The physical properties of elastomere springs means that they have a tendency to settle. The extent of such settlement is dependent on the internal heat of friction, speed and number of load changes, the spring travel and the Shore hardness.
Settlement may be as much as 3 to 5% of the spring length L_0.

Physical characteristics:

Tensile strength acc. to DIN 53504: $groeßergleich. 12 N/mm²
Elongation at break acc. to DIN 53504: $groeßergleich. 250 %
Bulk density acc. to DIN 53479: 1.37 g/cm³
Compression set acc. to DIN 53517: 20 % (24 h/70 °C)
Temperature scope: -20 °C to 80 °C short-term to max. 120 °C

2461.2. Tubular Spring Element, Rubber 70 Shore A

Order No	d_1	L_0	d_2	f max.
2461.2.016.012	16	12	6.5	4.8
2461.2.016.016	16	16	6.5	6.4
2461.2.016.020	16	20	6.5	8.0
2461.2.016.025	16	25	6.5	10.0
2461.2.020.016	20	16	8.5	6.4
2461.2.020.020	20	20	8.5	8.0
2461.2.020.025	20	25	8.5	10.0
2461.2.020.032	20	32	8.5	12.8
2461.2.025.020	25	20	10.5	8.0
2461.2.025.025	25	25	10.5	10.0
2461.2.025.032	25	32	10.5	12.8
2461.2.025.040	25	40	10.5	16.0
2461.2.032.032	32	32	13.5	12.8
2461.2.032.040	32	40	13.5	16.0
2461.2.032.050	32	50	13.5	20.0
2461.2.032.063	32	63	13.5	25.2
2461.2.040.032	40	32	13.5	12.8
2461.2.040.040	40	40	13.5	16.0
2461.2.040.050	40	50	13.5	20.0
2461.2.040.063	40	63	13.5	25.2
2461.2.040.080	40	80	13.5	32.0
2461.2.050.032	50	32	17	12.8
2461.2.050.040	50	40	17	16.0
2461.2.050.050	50	50	17	20.0
2461.2.050.063	50	63	17	25.2
2461.2.050.080	50	80	17	32.0
2461.2.050.100	50	100	17	40.0
2461.2.063.032	63	32	17	12.8
2461.2.063.040	63	40	17	16.0
2461.2.063.050	63	50	17	20.0
2461.2.063.063	63	63	17	25.2
2461.2.063.080	63	80	17	32.0
2461.2.063.100	63	100	17	40.0
2461.2.063.125	63	125	17	50.0
2461.2.080.032	80	32	21	12.8
2461.2.080.040	80	40	21	16.0
2461.2.080.050	80	50	21	20.0
2461.2.080.063	80	63	21	25.2
2461.2.080.080	80	80	21	32.0
2461.2.080.100	80	100	21	40.0
2461.2.080.125	80	125	21	50.0
2461.2.100.032	100	32	21	12.8
2461.2.100.040	100	40	21	16.0
2461.2.100.050	100	50	21	20.0
2461.2.100.063	100	63	21	25.2
2461.2.100.080	100	80	21	32.0
2461.2.100.100	100	100	21	40.0
2461.2.100.125	100	125	21	50.0
2461.2.125.032	125	32	27	12.8
2461.2.125.040	125	40	27	16.0
2461.2.125.050	125	50	27	20.0
2461.2.125.063	125	63	27	25.2
2461.2.125.080	125	80	27	32.0
2461.2.125.100	125	100	27	40.0
2461.2.125.125	125	125	27	50.0
2461.2.125.160	125	160	27	64.0

2461.2.016.
Ø 16/70 Shore A

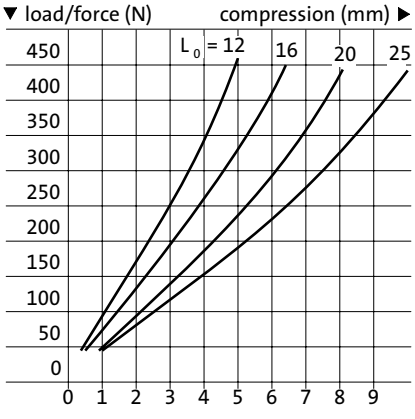

subject to alterations

Tubular Spring Elements, Rubber 70 Shore A

2461.2.020.
Ø 20/70 Shore A

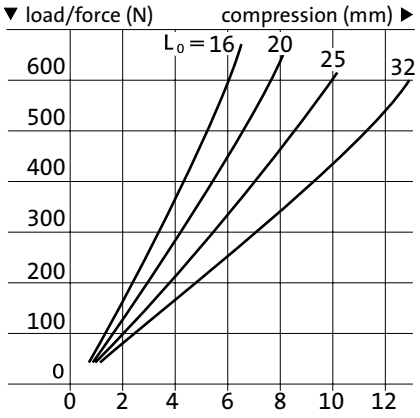

2461.2.025.
Ø 25/70 Shore A

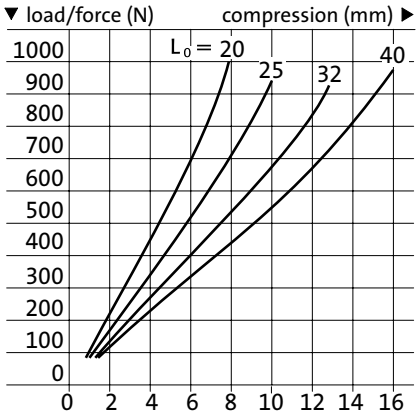

2461.2.032.
Ø 32/70 Shore A

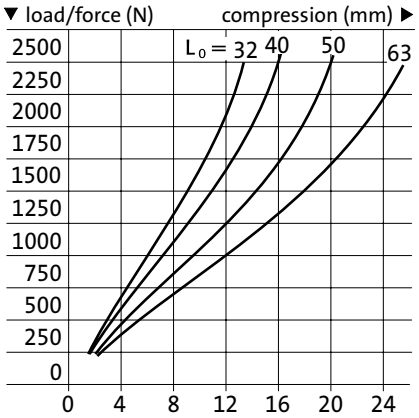

2461.2.040.
Ø 40/70 Shore A

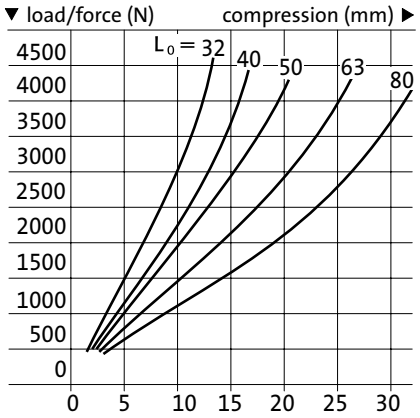

2461.2.050.
Ø 50/70 Shore A

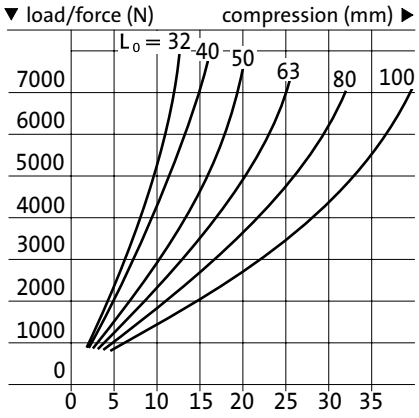

2461.2.063.
Ø 63/70 Shore A

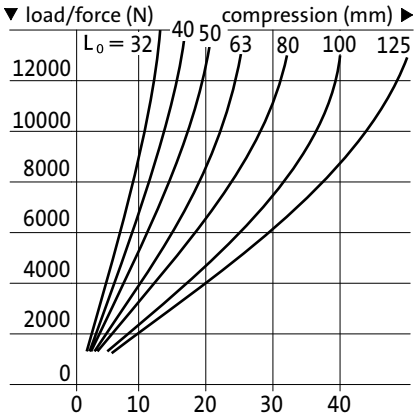

2461.2.080.
Ø 80/70 Shore A

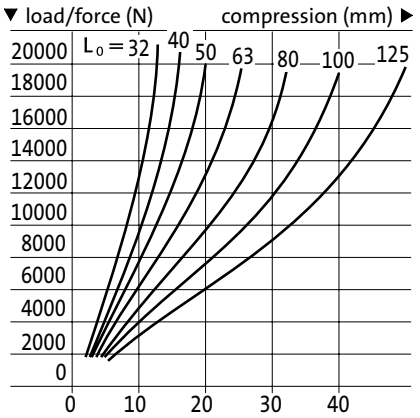

2461.2.100.
Ø 100/70 Shore A

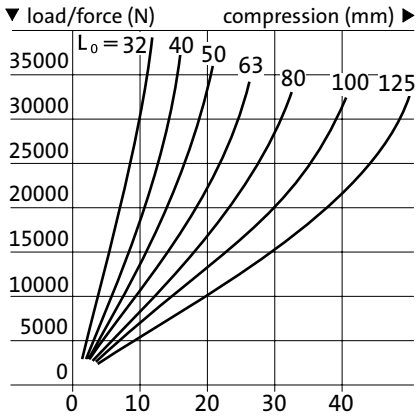

2461.2.125.
Ø 125/70 Shore A

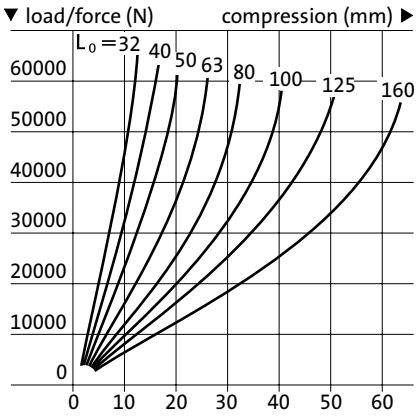

Locating bolt
Locating bolt, threaded



2441.5.

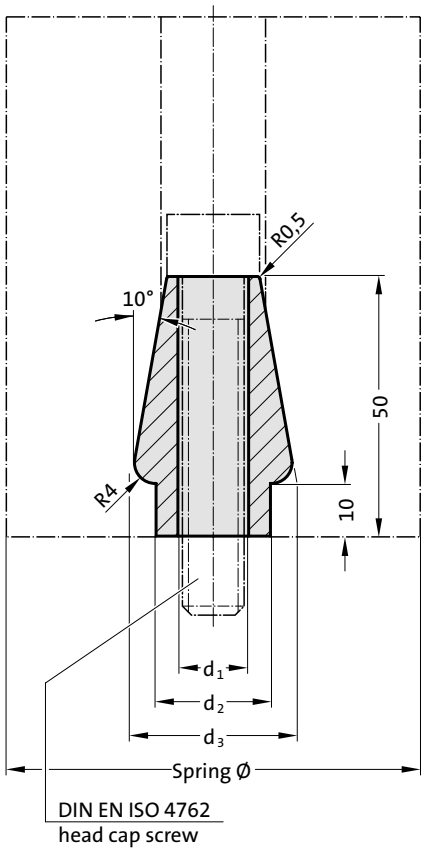

2441.5.
Locating bolt

Order No	Spring Ø	d_1	d_2	d_3	Socket cap screw DIN EN ISO 4762
2441.5.10	63	11	18	28	M10x65
2441.5.12	80 100	13.5	22	32	M12x70
2441.5.16	125	17.5	28	38	M16x70

Note:
Elastomeric round springs are positioned and secured in place by the locating bolts.
Screws not included.



2441.6.

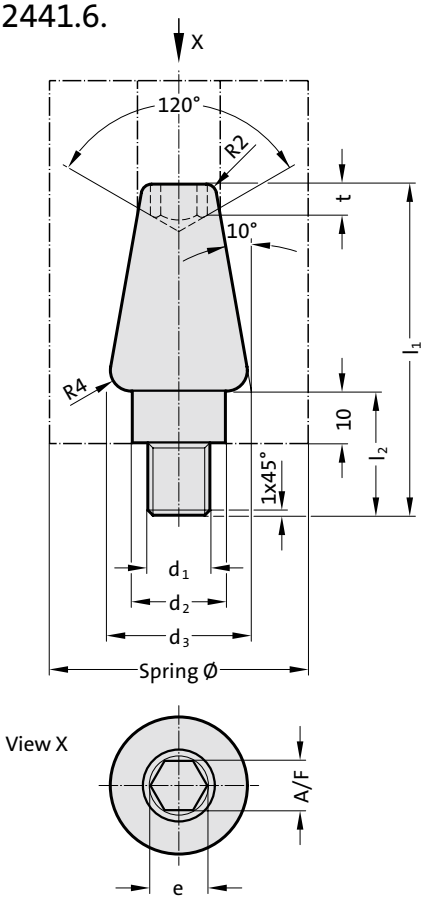

2441.6.
Locating bolt, threaded

Order No	Spring Ø	d_1	d_2	d_3	l_1	l_2	SW	e	t
2441.6.12	63	M12	18	28	64	24	10	11.4	6
2441.6.16	80 100	M16	22	32	68	28	10	11.4	6
2441.6.20	125	M20	28	38	72	32	14	16	8

Note:
Elastomeric round springs are positioned and secured in place by the locating bolts.

subject to alterations

Stacking washer DIN ISO 10069-2
Thrust washer

2441.3.

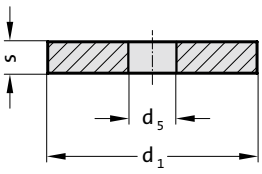

Mounting example

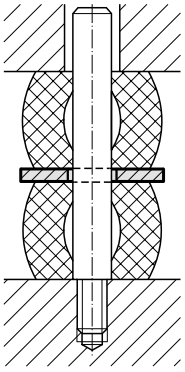

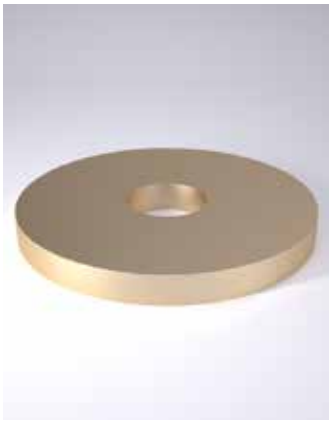

2441.3. Stacking washer DIN ISO 10069-2

Material:
Brass

Spring-Ø	16	20	25	32	40	50	63	80	100	125
d_1	20	25	30	40	50	60	80	100	120	150
d_5	6.5	8.5	10.5	13.5	13.5	16.5	16.5	20.5	20.5	26
s	4	4	5	5	5	6	6	8	8	8

Ordering Code (example):

Stacking washer DIN ISO 10069-2		=2441.3.
Spring diameter Spring-Ø	50 mm =	050
Order No		=2441.3.050

244.4.

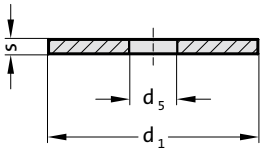

Mounting example

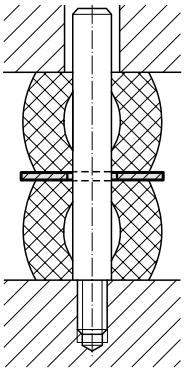



244.4. Thrust washer

Material:
St 37

Spring-Ø	16	20	25	32	40	50	63	80	100	125
d_1	20	26	32	40	50	60	80	100	120	150
d_5	6.5	8.5	10.5	13.5	13.5	16.5	16.5	20.5	20.5	26
s	1	1.5	2	2.5	2.5	3	3	4	4	5

Ordering Code (example):

Thrust washer		=244.4.
Spring diameter Spring-Ø	50 mm =	050
Order No		=244.4. 050

Guide pin
Trust washer for elastomer springs



Mounting example

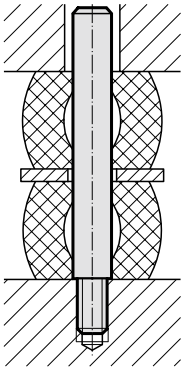

244.5.

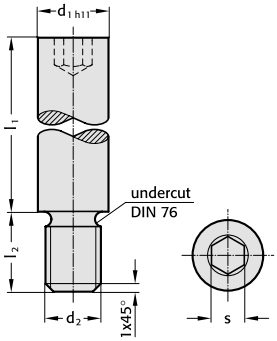

Material:
C 15

244.5. Guide pin

d_1	6	8	10	13	16	20	25
d_2	M4	M6	M8	M10	M12	M16	M20
l_2	6	9	15	15	18	25	30
s	3	4	5	6	8	10	14
l_1							
20	●	●	●				
25	●	●	●				
32	●	●	●	●	●		
40	●	●	●	●	●		
50		●	●	●	●	●	●
63			●	●	●	●	●
80				●	●	●	●
95				●	●	●	●
118					●	●	●
140					●	●	●
180					●	●	●

Ordering Code (example):

Guide pin		=244.5.
Nominal diameter d_1	16 mm =	16.
Guide length l_1	40 mm =	040
Order No		=244.5. 16.040



Mounting example

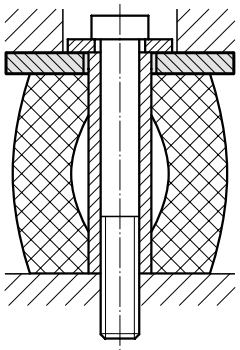

244.6.

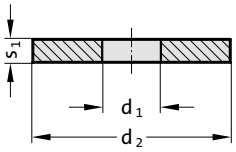

Material:
St 37

244.6. Trust washer for elastomer springs

Spring-Ø	25	32	40	50	63	80	100	125
d_1	10.5	13.5	13.5	16.5	16.5	20.5	20.5	26
d_2	32	40	50	60	80	100	120	150
s_1	4	5	5	6	8	10	12	15

Ordering Code (example):

Trust washer for elastomer springs		=244.6.
Spring diameter Spring-Ø	63 mm =	063
Order No		=244.6. 063

subject to alterations

Trust washer for compression springs

244.7.

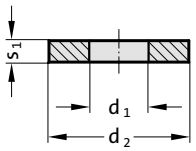

Mounting example

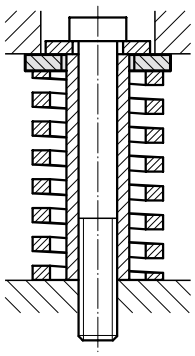



244.7. Trust washer for compression springs

Spring-Ø	20	25	32	40	50	63
d_1	10.5	12.5	16.5	20.5	25.5	35.5
d_2	25	25	38	38	50	65
s_1	4	4	5	5	6	8

Material:

No 1.1191 heat treated

Ordering Code (example):

Trust washer for compression springs		=244.7.
Spring diameter Spring-Ø	40 mm =	040
Order No		=244.7. 040

FIBRO

Spacer tube



244.9.

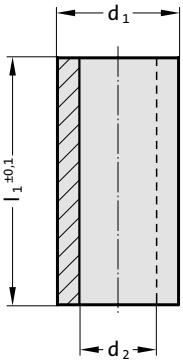

Mounting example

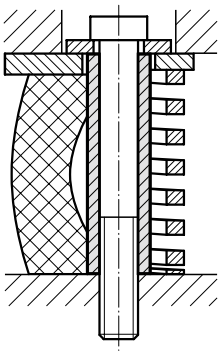

Material:

St 35.4 case-hardened

Note:

Other lengths on request!

244.9. Spacer tube

d_1	10	12	13	16	19	20	25	30	32	35	36	42
d_2	6.4	8.4	9	11	13	13	17	22	22	23	26	32
l_1												
27	●	●										
30			●	●	●							
33	●	●		●		●						
38	●	●		●		●						
40			●	●	●							
44	●	●		●		●						
48	●	●		●		●	●					
50			●	●	●	●	●	●				
61	●	●		●		●	●					
63		●	●	●	●	●	●	●				
70							●	●				
72	●	●		●		●	●	●		●	●	
80	●	●	●	●	●	●	●	●		●	●	
90		●		●		●	●	●		●	●	
95							●		●			
100		●	●	●	●	●	●	●		●	●	
105							●		●			
115							●					
125				●	●	●	●	●	●	●	●	
135							●					
145								●	●			
150				●		●	●	●		●	●	●
155							●					
165									●			
175							●	●		●	●	
185									●			
195							●					
200				●		●	●	●		●	●	●
205									●			
215							●					
225							●	●	●	●	●	
235							●					
245									●			
250							●	●		●	●	
255							●					

Ordering Code (example):

Spacer tube		=244.9.	
External diameter d_1	25 mm	=	25.
Length l_1	48 mm	=	048
Order No		=244.9.	25.048

subject to alterations

Stop washer

244.10.15.

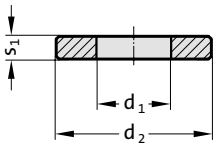

Mounting example

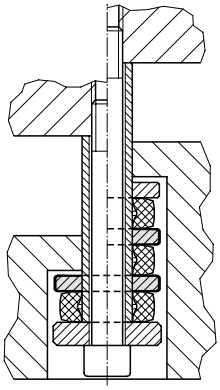



244.10.15. Stop washer

Order No	d_1	d_2	s_1
244.10.15.170.36.04	17	36	4
244.10.15.210.46.06	21	46	6
244.10.15.260.58.06	26	58	6
244.10.15.310.68.08	31	68	8
244.10.15.370.80.08	37	80	8
244.10.15.430.92.08	43	92	8

Material:

90MnCrV8, hardened

Disc
Spacer sleeve



Mounting example

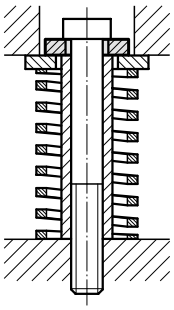

244.10.

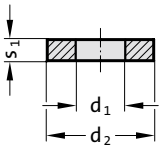

Material:
C 45 heat treated

244.10. Disc

d_1	d_2	s_1	d_1	d_2	s_1	d_1	d_2	s_1	d_1	d_2	s_1
6.4	17	3	13	30	5	17	40	6	25	46	10
8.4	17	3	13	35	5	17	50	6	25	55	10
8.4	23	4	13	30	6	17	58	10	25	56	10
8.5	20	4	13	46	8	20.4	30	5	25	70	10
9	26	4	13.4	23	4	21	42	8	26	58	6
10.5	25	4	16.4	26	4	21	44	8	26	80	12
10.5	25	5	17	35	4	21	45	8	31	68	8
10.5	26	4	17	35	6	21	45	16	31	68	10
10.5	28	4	17	36	4	21	46	6	32	92	15
10.5	30	5	17	36	13	21	49	6	37	80	8
11	36	6	17	37	6	21	65	8	43	92	8
12.5	28	4	17	38	6	22	68	12			

Ordering Code (example):

Disc		=244.10.	
Inside diameter d_1	17 mm	=	170.
External diameter d_2	38 mm	=	38.
Thickness s_1	6 mm	=	06
Order No		=244.10.	170. 38. 06



Mounting example

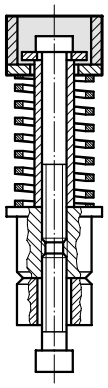

244.11.

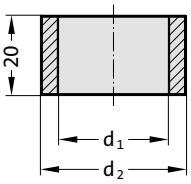

Material:
St 35.4 case-hardened

244.11. Spacer sleeve

Spring-Ø	20 25	32 40
d_1	20	30
d_2	25	38
Order code	25	40

Ordering Code (example):

Spacer sleeve		=244.11.	
Order code Diameter	40 mm	=	40
Order No		=244.11.	40

subject to alterations

Spacer plug
Adjusting washer

244.12.

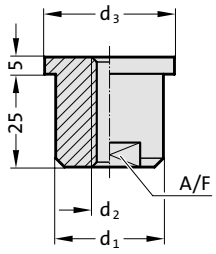

Mounting example

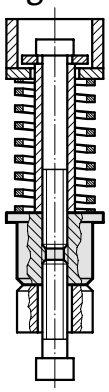



244.12. Spacer plug

Spring-Ø	20	25	32	40
d_1	20	20	32	32
d_2	M6	M8	M10	M12
d_3	25.3	25.3	38	38
A/F	15	15	27	27

Material:
No. 1.7131 case-hardened

Ordering Code (example):

Spacer plug		=244.12.
Spring diameter Spring-Ø	32 mm =	32
Order No		=244.12.32

244.13.

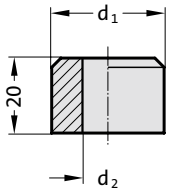

Mounting example

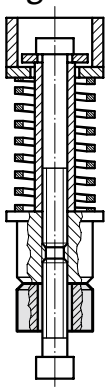

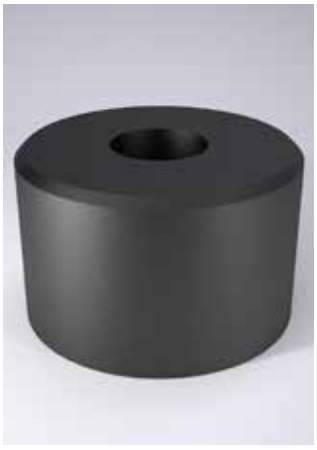

244.13. Adjusting washer

Spring-Ø	20	25	32	40
d_1	20	20	32	32
d_2	7	9	11	14

Material:
No. 1.7131

Ordering Code (example):

Adjusting washer		=244.13.
Spring diameter Spring-Ø	32 mm =	32
Order No		=244.13.32

Threaded disc for elastomer springs
Threaded disc for compression springs



Mounting example

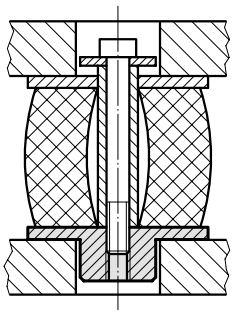

2441.14.

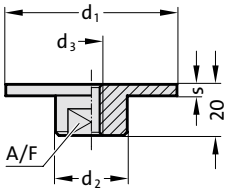

Material:
St 37

2441.14. Threaded disc for elastomer springs

Spring-Ø	25	32	40	50	63	80	100
d_1	32	40	50	60	78	98	120
d_2	18	18	18	20	20	26	26
d_3	M6	M8	M8	M10	M10	M12	M12
A/F	14	14	14	17	17	22	22
s	5	5	5	6	8	10	12

Ordering Code (example):

Threaded disc for elastomer springs		=2441.14.
Spring diameter Spring-Ø	50 mm =	050
Order No		=2441.14.050





Mounting example

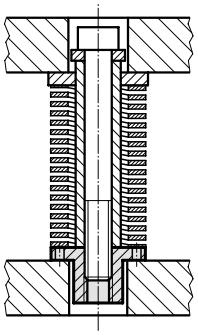

2441.15.

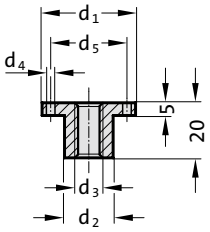

Material:
Ck 45 heat treated

2441.15. Threaded disc for compression springs

Spring-Ø d_1	20	25	32	40	50
d_2	10	12.5	16	20	25
d_3	M6	M8	M10	M12	M16
d_4	3.2	4.2	4.2	4.2	4.2
d_5	14	20	25	30	40

Ordering Code (example):

Threaded disc for compression springs		=2441.15.
Spring diameter Spring-Ø d_1	32 mm =	032
Order No		=2441.15. 032



subject to alterations

Shock absorbing washer

2450.

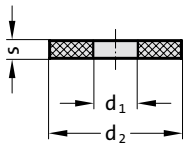

Mounting example

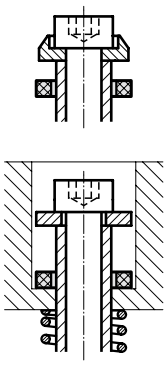



Material:
Polyurethan (FIBROFLEX®)

Execution:
2450.6. (90 Shore A) available from stock
2450.5. (80 Shore A) and
2450.7. (95 Shore A) available upon request

2450. Shock absorbing washer

d_1	d_2	s	d_1	d_2	s	d_1	d_2	s
6.4	16	3	17	26	4	25	32	6
8.5	20	3	17	38	5	26	35	6
10.5	15	4	17	50	6	26	50	6
10.5	25	4	17	63	6	27	41	7
11	17	3	18	27	4	27	125	10
12	24	5	18	32	7	31	42	6
13	19	4	21	30	5	32	40	6
13	25	4	21	35	7	32	49	8
13.5	32	4	21	38	6	32	60	10
13.5	40	5	21	80	10	37	46	6
14	23	4	21	100	10	37	53	8
14	26	5	22	28	6	37	65	10
15.5	23	4	23.5	34	4	42	70	10

Ordering Code (example):

Shock absorbing washer		=2450.	
Shore A hardness MAT	80 Shore A	=	5.
Inside diameter d_1	23.5 mm	=	23.
External diameter d_2	34 mm	=	034.
Thickness s	4 mm	=	04
Order No		=2450. 5. 23. 034.04	

Retaining bolt
Thrust washer



2441.18.

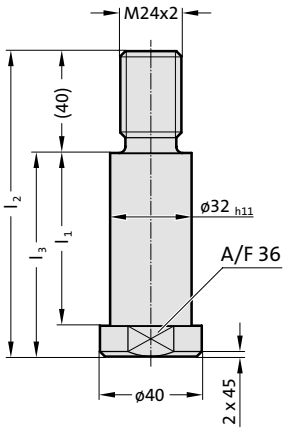

Material:
No. 1.7225, heat treated

2441.18. Retaining bolt

Order No	l_1	l_2	l_3
2441.18.032.048	48	100	60
2441.18.032.068	68	120	80
2441.18.032.088	88	140	100
2441.18.032.108	108	160	120
2441.18.032.128	128	180	140
2441.18.032.148	148	200	160
2441.18.032.168	168	220	180
2441.18.032.188	188	240	200
2441.18.032.208	208	260	220
2441.18.032.228	228	280	240
2441.18.032.248	248	300	260
2441.18.032.268	268	320	280
2441.18.032.288	288	340	300



2441.16.

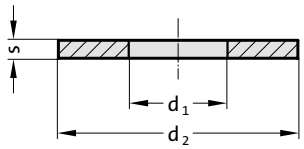

Material:
No. 1.0570

2441.16. Thrust washer

Order No	d_1	d_2	s
2441.16.033.080.06	33	80	6
2441.16.033.100.08	33	100	8

subject to alterations

FIBROFLEX®-Tubular spring element

246.6.

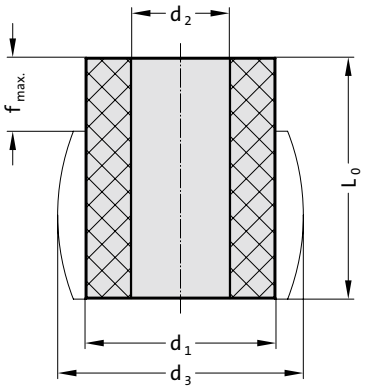



246.6. FIBROFLEX®-Tubular spring element

Order No	d_1	d_2	d_3	l_0	f max.
246.6.063.033.080	63	33	82	80	24
246.6.080.033.080	80	33	106	80	24

Material:

Polyurethan 90 Shore A
Colour: yellow

Mounting example

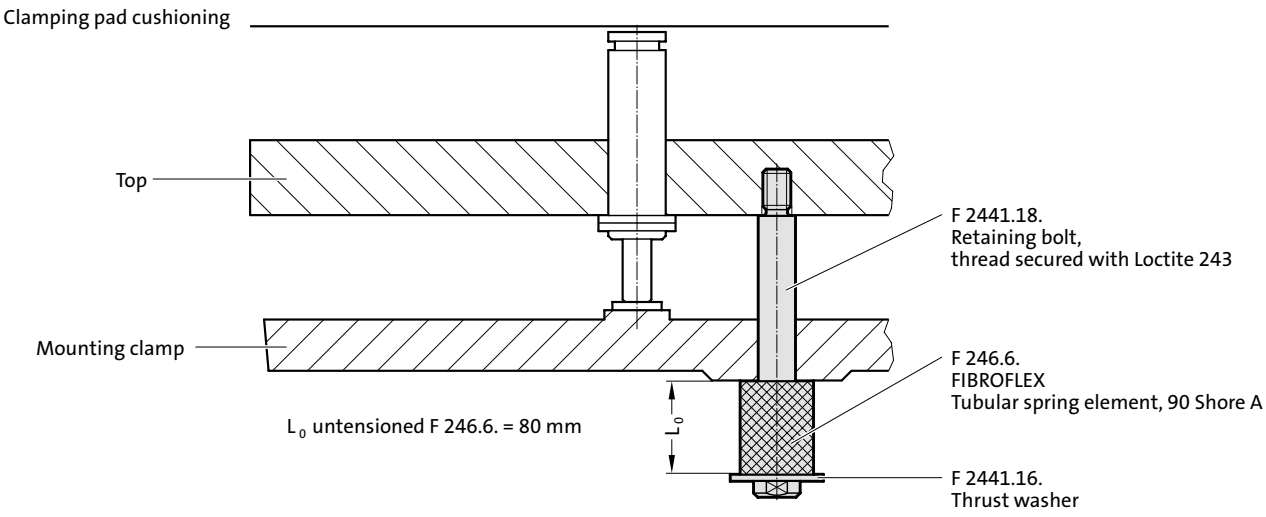

Spring unit for elastomer spring

244.14.0.

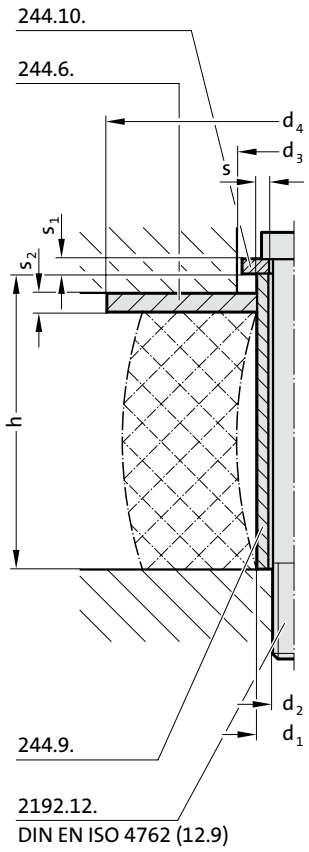

244.14.0. Spring unit for elastomer spring

Spring unit consists of:

Socket cap screw DIN EN ISO 4762 (12.9) 2192.12.
Spring abutment washer 244.6.
Spacer tube 244.9.
Stop washer 244.10.

Elastomer spring (separate order): 246.5., 246.6., 246.7., 2461.2., 2461.4.

Spring-∅	$d_1 \times s$	h*	d_2	d_3	d_4	s_1	s_2
25	10 × 1,8		M 6	18	32	3	4
32	12 × 1,8		M 8		40		5
40				30	50	4	
50	16 × 2,5		M 10		60		6
63					80		8
80	20 × 3,5		M 12		100		10
100					120		12
125	25 × 4,5		M 16	39	150	6	15

*h see selection chart spacer tube 244.9. and spring data

Ordering Code (example):

Spring unit for elastomer spring	=	244.14.
not loaded	=	0.
for spring-∅ = 40 mm	=	040.
Spacer tube length h = 48 mm	=	048
Order number	=	244.14.0.040.048

2441.14.1.

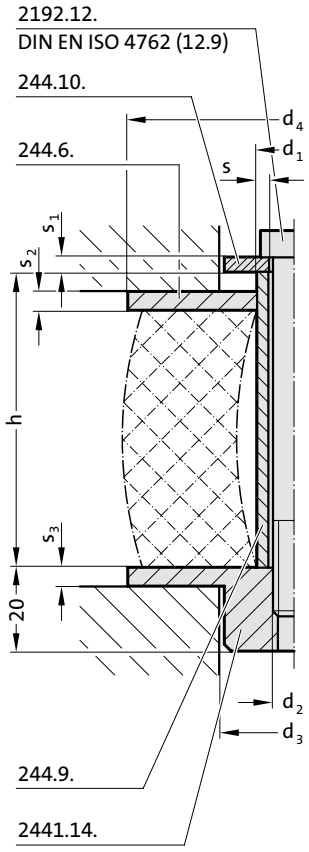

2441.14.1. Spring unit for elastomer spring

Spring unit consists of:

Socket cap screw DIN EN ISO 4762 (12.9) 2192.12.
Spring abutment washer 244.6.
Spacer tube 244.9.
Stop washer 244.10.
Threaded disc 2441.14.

Elastomer spring (separate order): 246.5., 246.6., 246.7., 2461.2., 2461.4.

Spring-∅	$d_1 \times s$	h*	d_2	d_3	d_4	s_1	s_2	s_3
25	10 × 1,8		M 6	20	32	3	4	5
32	12 × 1,8		M 8	20	40	3	5	5
40	12 × 1,8		M 8	20	50	4	5	5
50	16 × 2,5		M 10	22	60	4	6	6
63	16 × 2,5		M 10	22	80	4	8	8
80	20 × 3,5		M 12	28	100	4	10	10
100	20 × 3,5		M 12	28	120	4	12	12

*h see selection chart spacer tube 244.9. and spring data

Ordering Code (example):

Spring unit for elastomer spring	=	2441.14.
preloaded	=	1.
for spring-∅ = 40 mm	=	040.
Spacer tube length h = 48 mm	=	048
Order number	=	2441.14.1.040.048

subject to alterations

Spring unit for helical spring

244.15.0. Spring unit for helical spring

Spring unit consists of:

Socket cap screw DIN EN ISO 4762 (12.9) 2192.12.
Spring abutment washer 244.7.
Spacer tube 244.9.
Stop washer 244.10.

Helical spring (separate order): 241.14., 241.15., 241.16., 241.17.

Spring-∅	$d_1 \times s$	h*	d_2	d_3	d_4	s_1	s_2
20	10 × 1,8		M 6	18	25	3	4
25	12 × 1,8		M 8	18	25	3	4
32	16 × 2,5		M 10	30	38	4	5
40	20 × 3,5		M 12	30	38	4	5
50	25 × 4,0		M 16	39	50	6	6
63	35 × 6,0		M 20	52	65	6	8

*h see selection chart spacer tube 244.9. and spring Data

Ordering Code (example):

Spring unit for helical spring	=	244.15.
not loaded	=	0.
for spring-∅ = 40 mm	=	040.
Spacer tube length h = 48 mm	=	048
Order number	=	244.15.0.040.048

244.15.0.

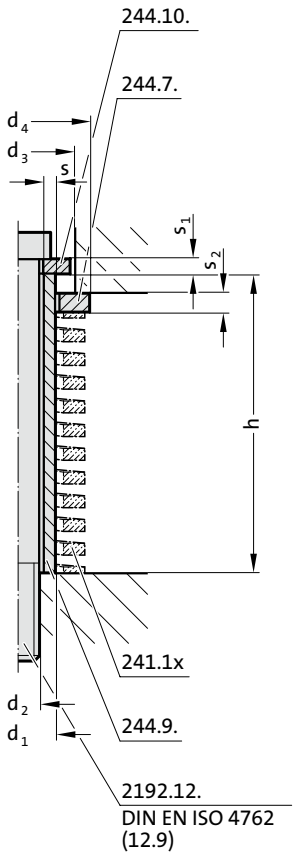

2441.15.1. Spring unit for helical spring

Spring unit consists of:

Socket cap screw DIN EN ISO 4762 (12.9) 2192.12.
Spring abutment washer 244.7.
Spacer tube 244.9.
Stop washer 244.10.
Threaded disc 2441.15.

Helical spring (separate order): 241.14., 241.15., 241.16., 241.17.

Spring-∅	$d_1 \times s$	h*	d_2	d_3	d_4	s_1	s_2
20	10 × 1,8		M 6	11	25	3	4
25	12 × 1,8		M 8	14	25	3	4
32	16 × 2,5		M 10	18	38	4	5
40	20 × 3,5		M 12	22	38	4	5
50	25 × 4,0		M 16	27	50	6	6

*h see selection chart spacer tube 244.9. and spring Data

Ordering Code (example):

Spring unit for helical spring	=	2441.15.
preloaded	=	1.
for spring-∅ = 40 mm	=	040.
Spacer tube length h = 48 mm	=	048
Order number	=	2441.15.1.040.048

2441.15.1. Mounting examples

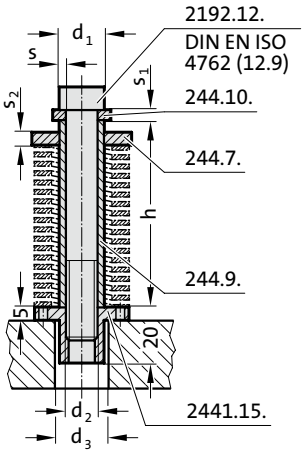

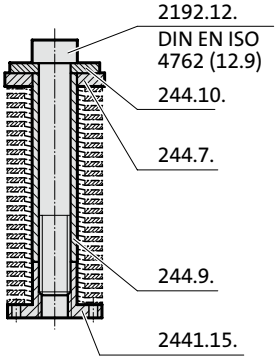

Spring- and Spacer Unit

Installation Example:

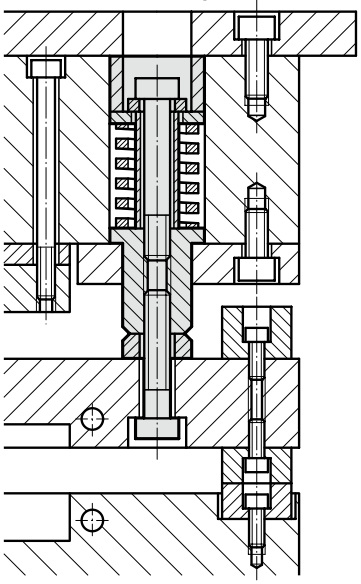

Note:

The headed spacer plugs are ground equal after assembly in the punch holder.

Note that regrinding on punch points must be compensated by grinding an equal amount off the compensation sleeves.

Adjust depth of c'bore h3 or height of spacer sleeve so that spacer tube cap screw is relieved by about 0,1 mm.

244.□□.□□□.10

Application without Spacer Sleeve (c'bored hole)

244.□□.□□□.11

Application with Spacer Sleeve (straight hole)

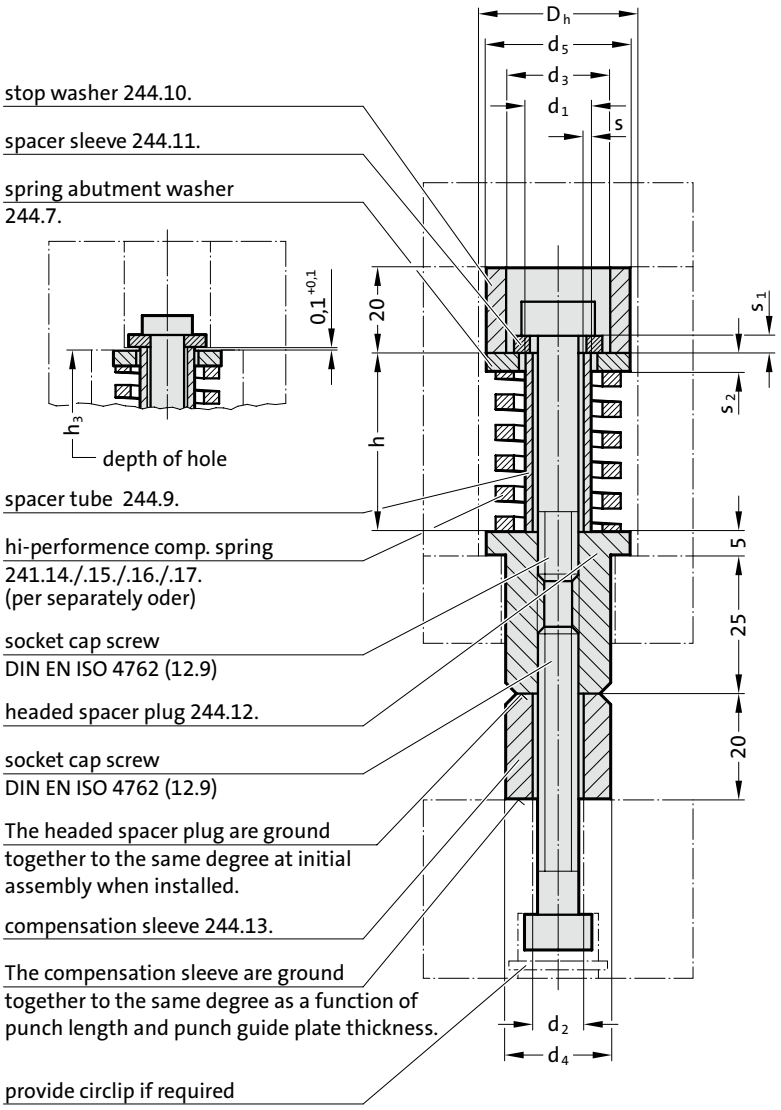

244.20./25./32./40. Spring- and Spacer Unit

Spring-∅	$d_1 \times s$	h*	socket cap screw d_2	d_3	d_4	d_5	D_h	s_1	d_2
20	10 × 1,8		M 6	18	20	25	26	3	4
25	12 × 1,8		M 8	18	20	25	26	3	4
32	16 × 2,5		M 10	30	32	38	40	4	5
40	20 × 3,5		M 12	30	32	38	40	4	5

h* see spacer tube length 244.9. and spring selection 241.1x.

Ordering Code (example):

Spring- and Spacer Unit	
Spring-∅ = 20 mm	= 244.20.
spacer tube length h = 38 mm with screw	= 038.
spacer tube length244.11.	= 11
Order No	= 244.20.038.11

subject to alterations

Combination Spring- and Spacer Units
Application Examples
Spring Characteristics

Without Spacer Sleeve

(with c`bored hole)
244.□□.□□□.10.

With Spacer Sleeve

(with straight hole)
244.□□.□□□.11.

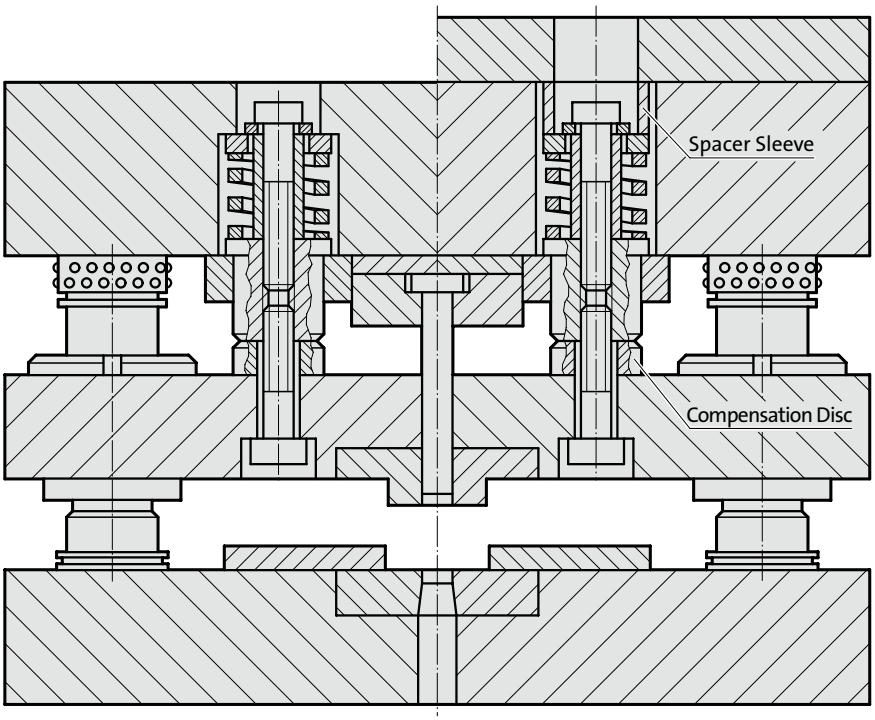

Description:

The preloaded Combination Spring- and Spacer Unit combines the functions of providing the spring force and of spacing the stripper in one constructional element, whilst conventional designs employed two.

The resulting advantages therefore consist of space savings and reduced machining cost with regard to the various die members.

The execution with spacer sleeve makes it possible to exchange the whole unit by simply removing the top clamping plate. Removal of the compensation disc gives unimpeded access to the punches – for the purpose of sharpening/grinding.

Important Notice:

In order to preserve pre-existing conditions in regard of spring force and displacement, it is essential that regrinding of the punches equals regrinding of the compensation disc – i. e. the metal removal from either component must be kept the same.

Helical compression springs must be ordered separately, see at the beginning of chapter F.

244.20. 244.32. 244.25. 244.40. Combination Spring- and Spacer Units
Spring Characteristics

Order No	spring sizes $D_h \times l_o$	preload Com-pression	spring preload forces (N) Typ				max. working stroke of spring (excl. preload) Typ				spring coefficient (N/mm) Typ				max. spring forces (N) at 80% max. deflection s_2 Type			
			241.14	241.15	241.16	241.17	.14	.15	.16	.17	.14	.15	.16	.17	.14	.15	.16	.17
244.20.027.□□	20 x 25	2	111,6	196,2	432,0	586,4	10,4	8,8	6,7	6,2	55,8	98,1	216,0	293,2	580	863	1447	1818
244.20.033.□□	20 x 32	3	135,0	218,1	504,0	672,6	12,8	10,4	8,4	7,8	45,0	72,7	168,0	224,2	576	756	1411	1749
244.20.038.□□	20 x 38	4	133,6	224,0	516,0	708,4	15,2	12,8	10,0	9,6	33,4	56,0	129,0	177,1	508	717	1290	1700
244.20.044.□□	20 x 44	4	120,0	190,4	448,0	596,4	18,4	15,2	11,6	11,2	30,0	47,6	112,0	149,1	552	724	1299	1670
244.20.048.□□	20 x 51	7	171,5	291,9	658,0	896,7	20,8	16,8	13,2	12,8	24,5	41,7	94,0	128,1	510	701	1241	1640
244.25.027.□□	25 x 25	2	200,0	294,0	750,0	–	10,4	8,8	7,2	–	100,0	147,0	375,0	–	1040	1294	2700	–
244.25.033.□□	25 x 32	3	240,9	354,3	891,0	1123,8	12,8	10,4	8,4	8,0	80,3	118,1	297,0	374,6	1028	1228	2495	2997
244.25.038.□□	25 x 38	4	248,0	372,4	876,0	1384,8	15,2	12,8	10,4	9,6	62,0	93,1	219,0	346,2	942	1192	2278	3324
244.25.044.□□	25 x 44	4	212,0	323,2	748,0	976,8	18,4	15,2	12,4	11,2	53,0	80,9	187,0	244,2	975	1228	2319	2735
244.25.048.□□	25 x 51	7	308,7	480,9	1092,0	1453,9	20,0	16,8	14,4	12,8	44,1	68,7	156,0	207,7	882	1154	2246	2659
244.32.038.□□	32 x 38	5	470,5	925,5	1940,0	2643,0	15,2	12,8	9,6	8,8	94,1	185,1	388,0	528,6	1430	2369	3725	4652
244.32.044.□□	32 x 44	5	398,0	790,5	1620,0	2135,5	17,6	15,2	11,2	10,4	79,6	158,1	324,0	424,7	1401	2403	3629	4417
244.32.048.□□	32 x 51	8	536,0	1072,8	2176,0	2826,4	20,0	16,8	13,2	12,0	67,0	134,1	272,0	353,3	1340	2253	3590	4240
244.32.061.□□	32 x 64	8	424,0	792,8	1696,0	2155,2	25,6	21,6	17,2	16,0	53,0	99,1	212,0	269,4	1357	2141	3646	4310
244.32.072.□□	32 x 76	9	396,9	724,5	1548,0	1968,3	31,2	25,6	20,8	19,2	44,1	80,5	172,0	218,7	1376	2061	3578	4199
244.40.048.□□	40 x 51	8	736,0	1432,0	2801,6	5027,2	20,0	16,8	13,6	12,0	92,0	179,0	350,2	628,4	1840	3007	4763	7541
244.40.061.□□	40 x 64	8	584,8	1120,0	2152,0	3905,6	25,6	20,8	17,6	15,2	73,1	140,0	269,0	488,2	1871	2912	4734	7421
244.40.072.□□	40 x 76	9	567,9	972,9	1971,0	3413,7	30,4	25,6	21,6	19,2	63,1	108,1	219,0	379,3	1918	2767	4730	7283

Spring- and Spacer Unit
low installation space

244.□□.3.□□□.10

Application without Spacer Sleeve
(c'bored hole)

244.□□.3.□□□.11

Application with Spacer Sleeve
(straight hole)

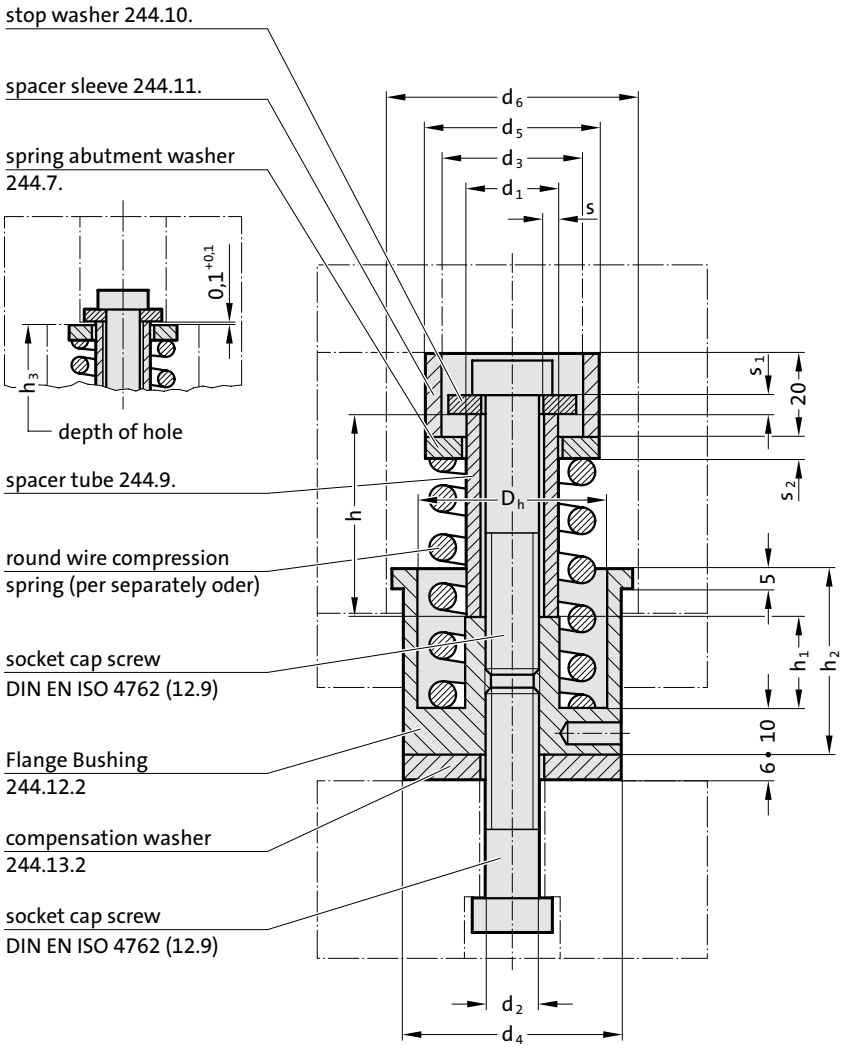

Installation Example:

with spacer sleeve

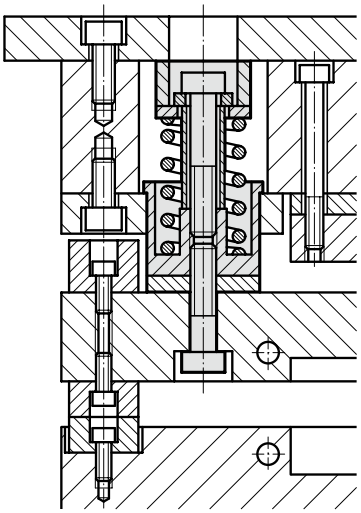

Note:

After fitting, the flange bushings are ground to the same length.

Note that regrind allowance on punch points must equal that taken off the compensation washers.

Adjust depth of c´bore or spacer sleeve length resp. so that spacer tube cap screw is relieved by about 0,1 mm.

244.20./25./32./40.3. Spring- and Spacer Unit low installation space

Spring-∅	$d_1 \times s$	h*	d_2	d_3	d_4	d_5	d_6	D_h	s_1	s_2	h_1	h_2
20	10 × 1,8		M 6	18	25	25	31	20	3	4	5	36
25	12 × 1,8		M 8	18	32	25	38	25	3	4	10	36
32	16 × 2,5		M 10	30	38	38	44	32	4	5	16	40
40	20 × 3,5		M 12	30	47	38	54	40	4	5	18	40

h* see spacer tube length 244.9. and spring selection 241.1x.

Ordering Code (example):

Spring- and Spacer Unit low installation space	
for spring-∅ = 20 mm	= 244.20.3.
spacer tube length h = 33 mm	= 033.
with spacer sleeve 244.11.	= 11
Order No	= 244.20.3.033.11

subject to alterations

FIBRO

Spring and spacer unit



Mounting example

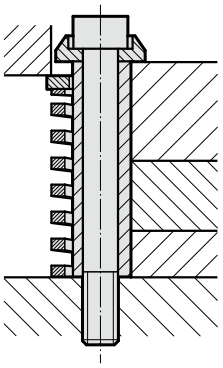

244.16.

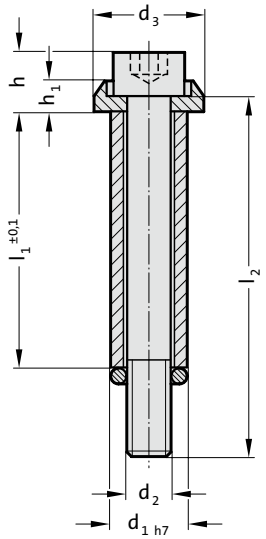

Description:

These units can be used as an alternative to shoulder screws.
Advantages:
Precision length adjustments by way of grinding. The units have many uses – as can be seen from the installation examples below.

Material:

Spacer tube: Steel, hardened
Socket cap screw DIN EN ISO 4762 (12.9)

Execution:

Outside diameter ground
Tolerance: h_7

Note:

The units are supplied with a retaining O-ring **wich must be removed before application.**

244.16. Spring and spacer unit

d_1	10	12.5	15	17.5	23	25
d_2	M6	M8	M10	M12	M16	M16
Tightening torque [Nm]	13	32	65	120	290	290
d_3	15	19	23	27	34	40
h	10	13	15	18	24	24
h_1	5.5	6.5	7.5	9	11	11
l_1	l_2					
20	35	35				
25	40					
30	45	45	50	50		
35	50	50	55			
40	55	55	60	60		
45	60	60	65	65		
50	65	65	70	70	80	
55	70	70 80	75	80		
60	80	80	80 90	90	90	
70	90	90	90 100	100	100	
80	100	100	100 110	110 115 120	110 125 130	110
90	110	110	110	120	120	120
100	120	120	120	130 135 140	130 140 145	130
110				140	140 150	
120			140	150	150 160	
140				180	180	
150					180	
160					200	

Spring and spacer unit		=	244.16.
Nominal diameter d_1	15 mm	=	150.
Length l_1	100 mm	=	100.
Screw length l_2	120 mm	=	120
Order No		=	244.16. 150. 100. 120

FIBRO

Spring and spacer unit, with hexagon socket countersunk head cap screw



Mounting example

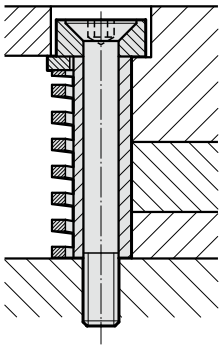

244.18.

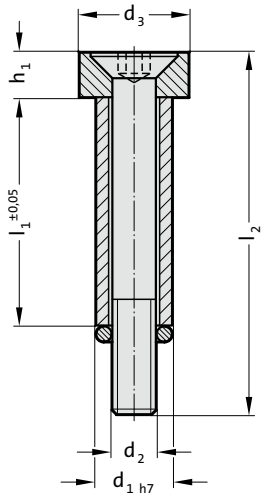

Description:

These units can be used as an alternative to shoulder screws.
Advantages:
Precision length adjustments by way of grinding. The units have many uses – as can be seen from the installation examples below.

Material:

Spacer tube: Steel, hardened
Countersunk head cap screw DIN EN ISO 10642 (10.9)

Execution:

Outside diameter ground
Tolerance: h_7

Note:

The units are supplied with a retaining O-ring **wich must be removed before application.**

244.18. Spring and spacer unit, with hexagon socket countersunk head cap screw

d_1	10	12.5	15	17.5	23
d_2	M6	M8	M10	M12	M16
Tightening torque [Nm]	12	28	56	98	240
d_3	15	19	23	27	34
h	10	13	15	18	24
h_1	6	8	10	12	16
l_1	l_2				
20	35				
25	40	45			
30	45	50	55	60	
35	50	55	60	70	
40	55	60	65	70	
45	60	70	70	80	
50	65	70	80	80	90
55		80	80	90	90
60		80	90	90	100
70		90	100	100	110
80		100	110	110	120
90			120	120	140
100					140
110					150
120					150

Ordering Code (example):

Spring and spacer unit, with hexagon socket countersunk head cap screw		=	244.18.
Nominal diameter d_1	15 mm	=	150.
Length l_1	60 mm	=	060.
Screw length l_2	90 mm	=	090
Order No		=	244.18. 150. 060. 090

Shoulder screw



Mounting example

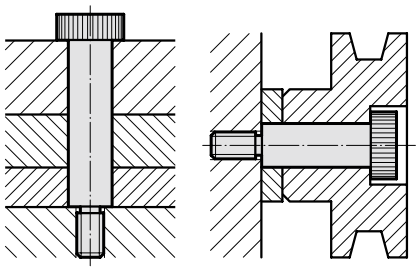

244.17.

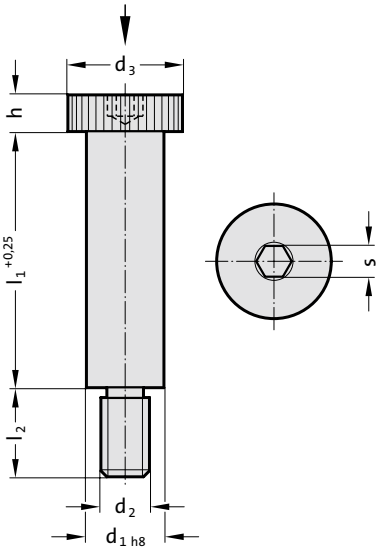

Material:

High tensile steel,
heat treated to 12.9 ISO 898-1.

Execution:

d_1 ground,
heads knurled.

244.17. Shoulder screw

d_1	6	8	10	12	16	20	24
d_2	M5	M6	M8	M10	M12	M16	M20
Tightening torque [Nm]	7	13	32	65	120	290	500
d_3	10	13	16	18	24	30	36
h	4.5	5.5	7	9	11	14	16
s	3	4	5	6	8	10	12
l_2	9.5	11	13	16	18	22	27
l_1							
10	●	●					
12	●	●					
16	●	●	●	●			
20	●	●	●	●			
25	●	●	●	●	●		
30	●	●	●	●	●		
35	●	●	●	●	●		
40	●	●	●	●	●	●	
45			●	●	●	●	
50		●	●	●	●	●	●
55			●	●	●	●	
60			●	●	●	●	●
65			●	●	●	●	
70			●	●	●	●	●
80			●	●	●	●	●
90				●	●	●	●
100				●	●	●	●
120					●	●	●

Ordering Code (example):

Shoulder screw		=244.17.
Nominal diameter d_1	12 mm =	120.
Guide length l_1	55 mm =	055
Order No		=244.17. 120.055

subject to alterations

Compression spring set screw

241.00.1.

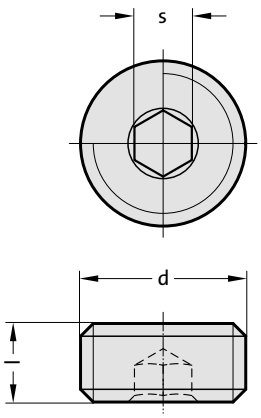

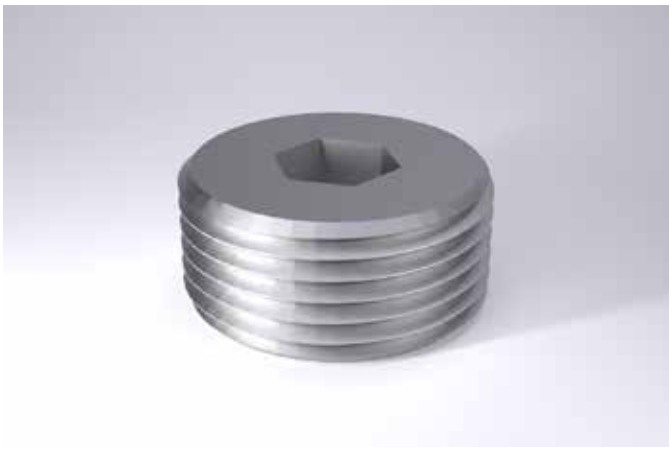

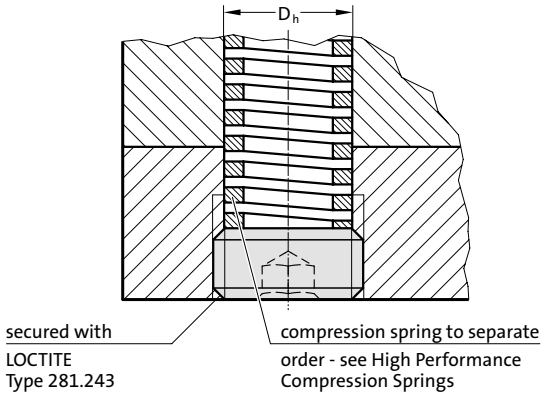

Description:

These set screws can be used as adjustable spring stops. They are available for all customary spring sizes from Ø 10 to Ø 40. The set screws are suitable for springs 241.14. to .17.
Their use offers the following advantages:
– Adjustable spring tension from under the bottom bolster, without any dismantling.
– Exchange of springs without dismantling.
– Through-holes instead of blind holes for spring accommodation.

Ordering Code (example):

Compression spring set screw		=241.00.1.
d	22 mm =	22
Order No		=241.00.1. 22

241.00.1. Compression spring set screw

d	M12x1,5	M14x1,5	M18x1,5	M22x1,5	M28x1,5	M35x1,5	M42x1,5
l	10	10	10	10	12	12	12
s	6	6	8	8	10	10	10
Spring Ø	10	12.5	16	20	25	32	40
D_h	10.5	12.5	16.5	20.5	26.5	33.5	40.5

Compression Pad
Shedder insert



2471.6.

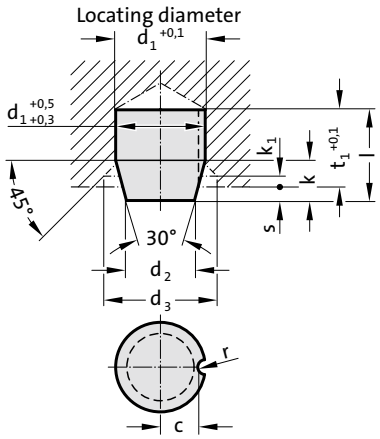

Material:
FIBROFLEX®
Hardness 90 Shore A

2471.6. Compression Pad

Order No	d_1	d_2	d_3	l	k	k_1	t_1	r	c	Compressive force [N]	at s
2471.6.006	6	3.6	10	9.5	4.5	1	8	-	-	100	1.5
2471.6.010	10	6	16	15.5	7.5	2	13	1	4	450	2.5
2471.6.016	16	9.5	22	25	12	5	21	1.5	6.5	1500	4
2471.6.024	24	18	32	25	10	2	21	2	10	3000	4
2471.6.030	30	20	38	35	19	10	30	2.5	12.5	3000	5
2471.6.032	32	24	40	32	14	4	26	3	13	12000	6
2471.6.039	39.5	30	50	40	16	4.75	34	3	16.8	25000	6





Mounting example

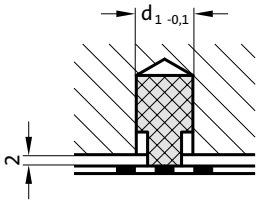

247.6.

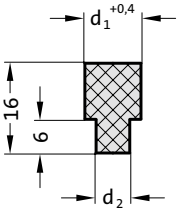

Description:
Instead of conventional shedder pins and their springs as well as set screws, FIBROFLEX® Shedder Inserts are simply pressed into matching holes (see mounting example).

Material:
FIBROFLEX®
Hardness 90 Shore A

247.6. Shedder insert

Order No	d_1	d_2	Stripping force [daN]
247.6.008.016	8	4	20
247.6.010.016	10	6	25
247.6.012.016	12	8	30



subject to alterations

Setting-up bumper, round

2531.7.

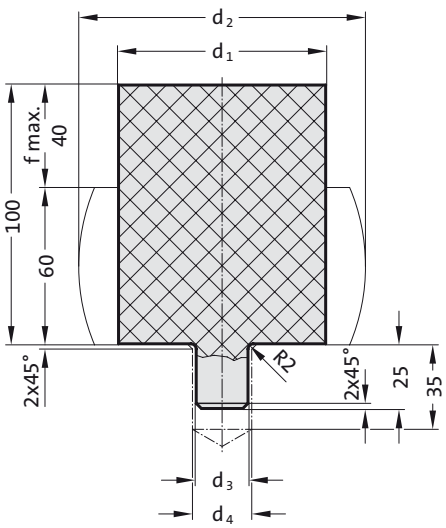



Description:

Setting up bumpers are used for setting down and setting up tools and replace shear pins.

Material:

FIBROFLEX®
Hardness 95 Shore A

Attention:

Setting up bumpers are not suitable for continuous use. To prevent damage when setting down tools, ensure that the setting up bumpers are large enough to withstand 1.5 times the weight of the tool (see table).

Implementation:

1. When setting up slowly move the ram into the bottom position.
2. Clamp the tool, then move the ram back to the top position (with the setting up bumper compressed to a height of 60 mm).
3. After setting up, remove the setting up bumpers and place them in the storage hole on the tool.

Mounting example

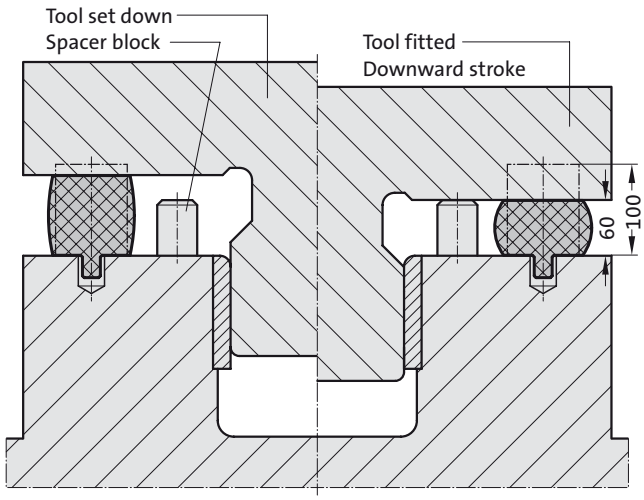

2531.7. Setting-up bumper, round

Order No	d_1	d_2	d_3	d_4	f max.	Load capacity in daN at f=20	Load capacity in daN at f=25	Load capacity in daN at f=40	Admissible tool weight in kg for 4 setting up bumpers f=20/safety factor 1,5
2531.7.063	63	86	16	18	40	2200	2800	4800	5800
2531.7.080	80	111	20	22	40	3500	4600	8500	9300
2531.7.100	100	136	20	22	40	5000	6700	11700	13300
2531.7.125	125	171	25	28	40	7600	9400	18900	20200

Setting-up bumper, square

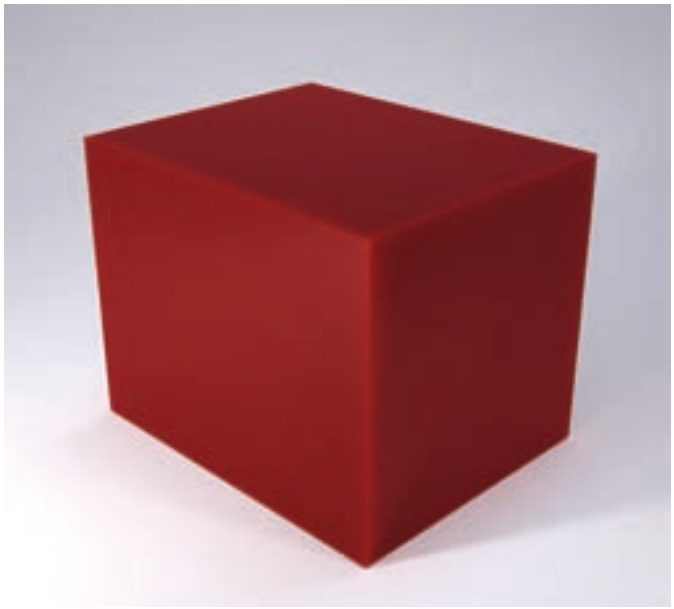

252.7.

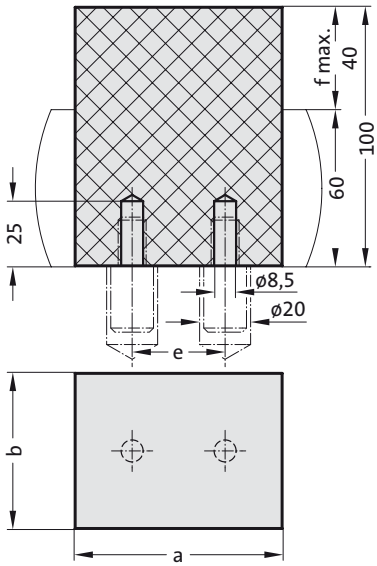

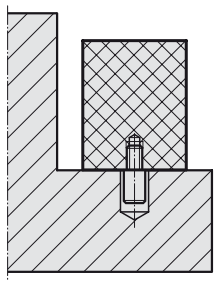

The setting up bumper is located in the storage hole while the toll is in use (guide screw 244.5.13.040 withdrawn).

Mounting example

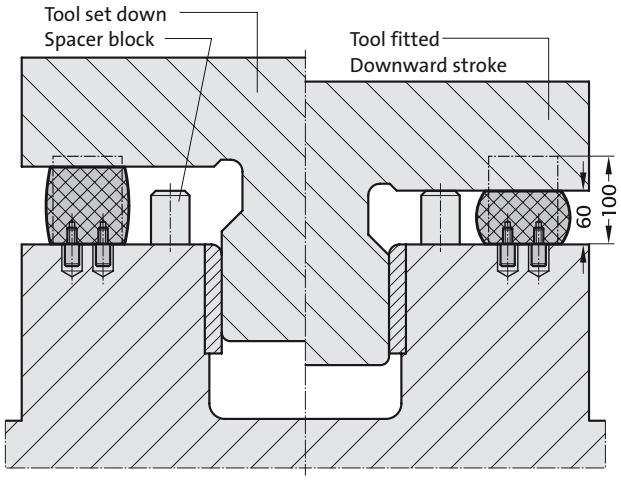

Description:

Setting up bumpers are used for setting down and setting up tools and replace shear pins.

Material:

FIBROFLEX®
Hardness 95 Shore A

Attention:

Setting up bumpers are not suitable for continuous use. To prevent damage when setting down tools, ensure that the setting up bumpers are large enough to withstand 1.5 times the weight of the tool (see table).

Implementation:

1. When setting up slowly move the ram into the bottom position.
2. Clamp the tool, then move the ram back to the top position (with the setting up bumper compressed to a height of 60 mm).
3. After setting up, remove the setting up bumpers and place them in the storage hole on the tool.

252.7. Setting-up bumper, square

Order No	a	b	e	Load capacity in daN at f=20	Admissible tool weight in kg for 4 setting up bumpers f=20/safety factor 1,5
252.7.080.060	80	60	36	2700	7100
252.7.100.080	100	80	50	6200	16500
252.7.125.100	125	100	60	8600	22900
252.7.180.100	180	100	100	13600	36200

subject to alterations

Spacer for die release

2533.10.

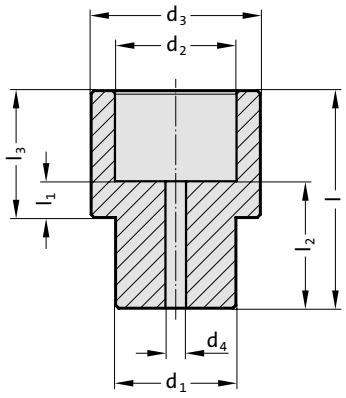



Description:

The spacers are inserted into the die for storage and transport purposes.

Material:

Greenamid PA6 (GF30), colour: orange

Mounting example

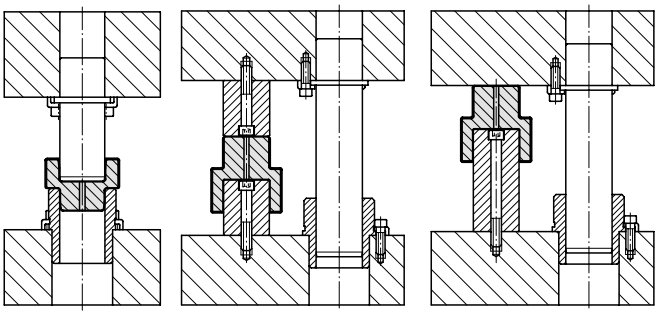

2533.10. Spacer for die release

Order No	d_2	d_1	l	l_1	l_2	l_3	d_3	d_4*	max. carrying capacity [daN]
2533.10.015	15.2	14.8	52	12	32	32	25	7	2500
2533.10.016	16.2	15.8	52	12	32	32	26	7	2500
2533.10.018	18.2	17.8	52	12	32	32	29	7	2700
2533.10.019	19.2	18.8	52	12	32	32	30	7	2700
2533.10.020	20.2	19.8	52	12	32	32	31	7	2700
2533.10.024	24.2	23.8	56	12	34	34	36	7	3600
2533.10.025	25.2	24.8	56	12	34	34	37	7	3600
2533.10.030	30.2	29.8	60	12	36	36	44	7	4500
2533.10.032	32.2	31.8	60	12	36	36	46	7	4500
2533.10.038	38.2	37.8	73	12	43	43	54	7	6000
2533.10.040	40.2	39.8	73	12	43	43	56	7	6000
2533.10.042	42.2	41.8	73	12	43	43	58	7	6000
2533.10.048	48.2	47.8	84	12	48	49	66	8.6	7500
2533.10.050	50.2	49.8	84	12	48	49	68	8.6	7500
2533.10.052	52.2	51.8	84	12	48	49	70	8.6	7500
2533.10.060	60.2	59.8	92	12	52	53	79	8.6	9400
2533.10.063	63.2	62.8	92	12	52	53	82	8.6	9400
2533.10.080	80.2	79.8	94	14	54	54	102	8.6	12000
2533.10.100	100.2	99.8	96	16	56	56	123	8.6	15000
2533.10.125	125.2	124.8	96	16	56	56	150	8.6	18000

*Tap hole for thread, created by customer

Spacer with spring for die release



2533.20.

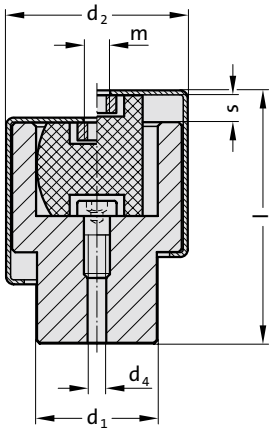

Mounting example

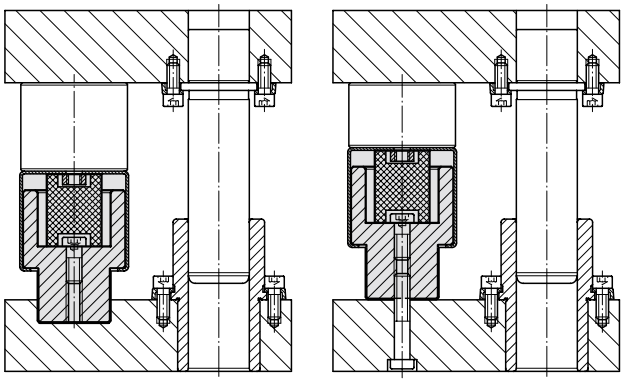

Description:

The spacers with springs are inserted into the die for storage and transport purposes.

Material:

Spacer: Greenamid PA6 (GF30), colour: orange
Spring: PU
Housing: steel, painted orange

2533.20. Spacer with spring for die release

Order No	d_2	d_1	s	l	m	d_4*	Spring force [daN]	max. carrying capacity [daN]
2533.20.040	60	39.8	10	83.5	M8	6.8	600	6000
2533.20.050	71.5	49.8	10	97.5	M10	8.6	800	7500
2533.20.063	85.5	62.8	10	103.5	M10	8.6	1250	9400
2533.20.080	105.5	79.8	10	105.5	M10	8.6	2300	12000
2533.20.100	128	99.8	10	107.5	M10	8.6	3600	15000
2533.20.125	154	124.8	10	107.5	M10	8.6	7000	18000

*Tap hole for thread, created by customer

subject to alterations

Hinge for spacer

2533.00.01.

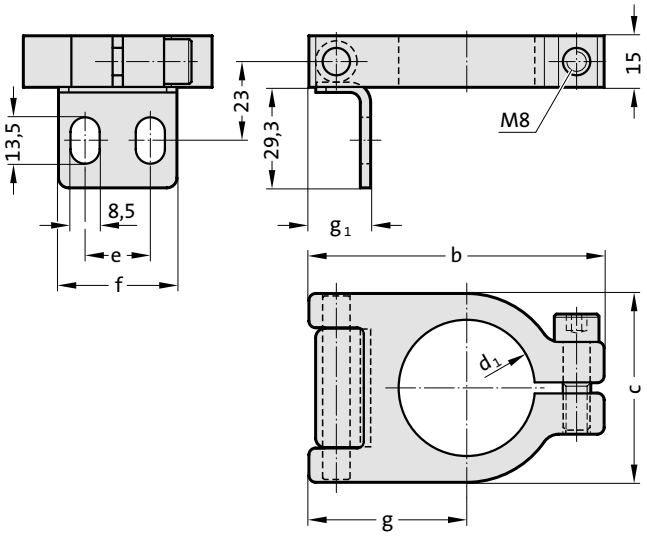



Material:
Steel, burnished

Note:
for 2533.10 and 2533.20.
Screws not included.

Mounting example

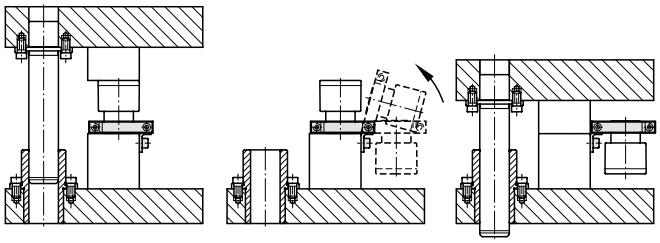

2533.00.01. Hinge for spacer

Order No	d_1	b	c	e	f	g	g_1
2533.00.01.040	39.8	86	55	19	34.5	46	18
2533.00.01.050	49.8	97	70	25	44.5	53.5	17.5
2533.00.01.063	62.8	106	80	30	49.5	57	17.5
2533.00.01.080	79.8	140	105	40	69.5	72	19
2533.00.01.100	99.8	156	125	50	79.5	80	18.5
2533.00.01.125	124.8	183	150	70	99.5	93	18.5

Strippers for Blanking Dies
to Mercedes-Benz- / VW Standard / VDI 3362



Material:

Perbunan
Hardness to DIN 53505:
Shore A65±5

Construction:

Surface quality to DIN ISO 3302-1

Application:

For blanking die tools

Supplied without screws

Installation example

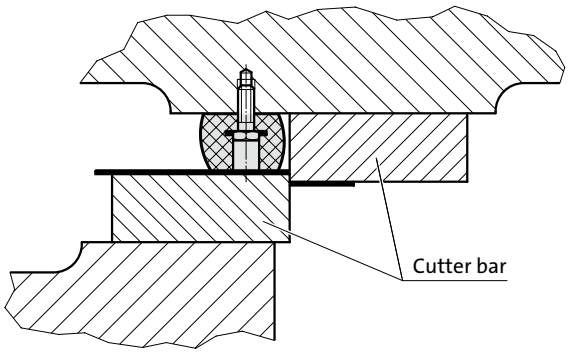

2532.2.190.270.0306

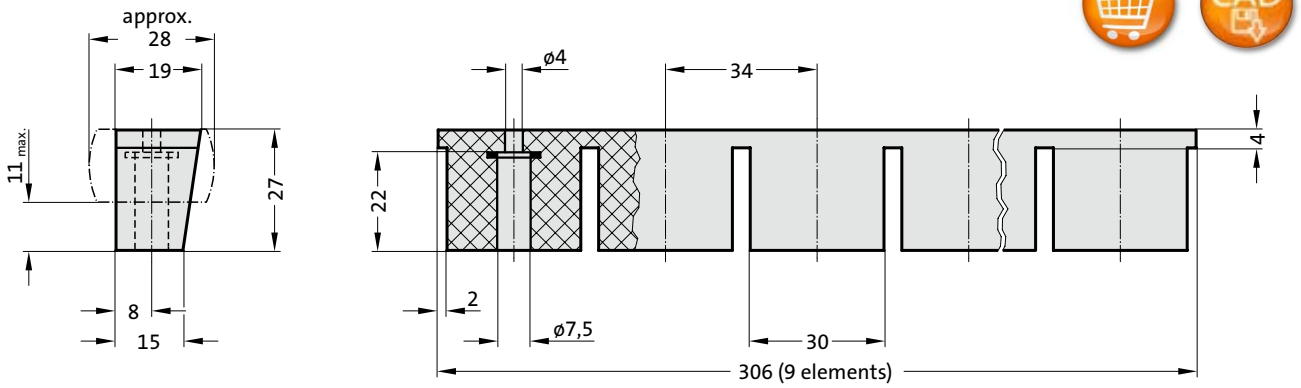

2532.2.190.165.0270

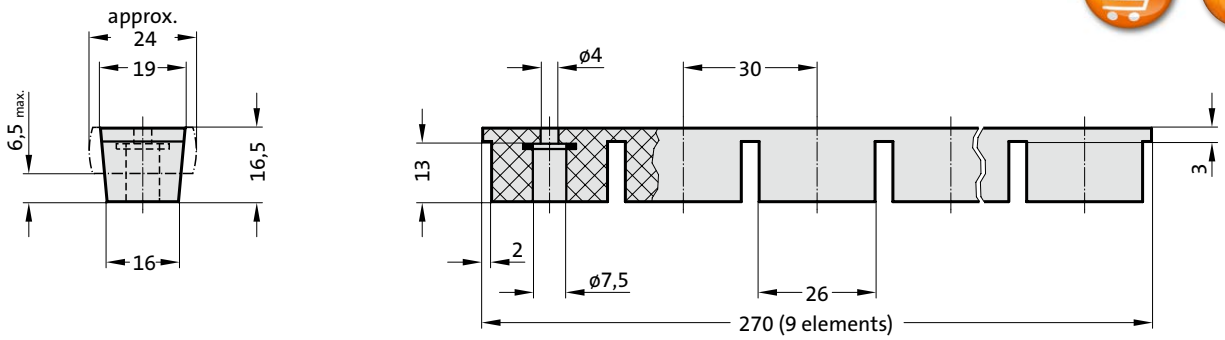

2532.2.150.115.0270

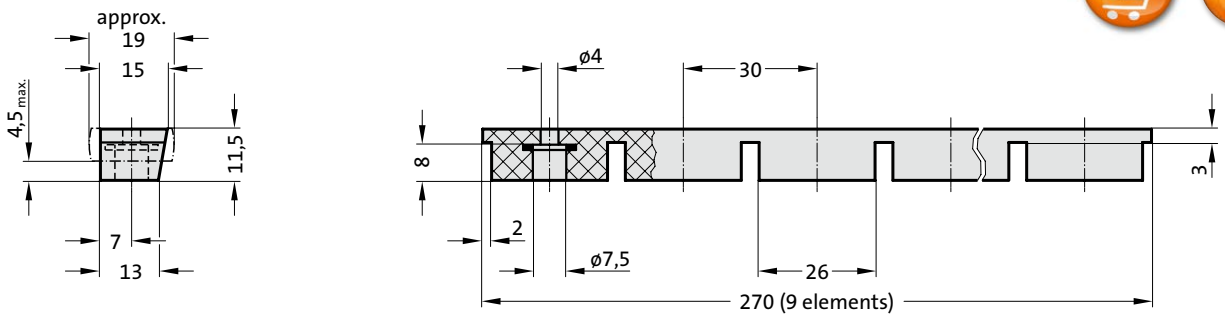

subject to alterations



Spring plungers

FIBRO

Spring plunger, standard spring force, VDI 3004, Colour marking: yellow



Mounting example

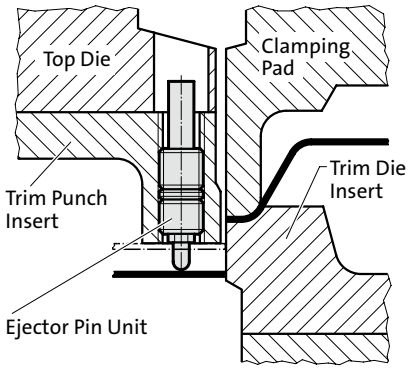

2470.10. .1

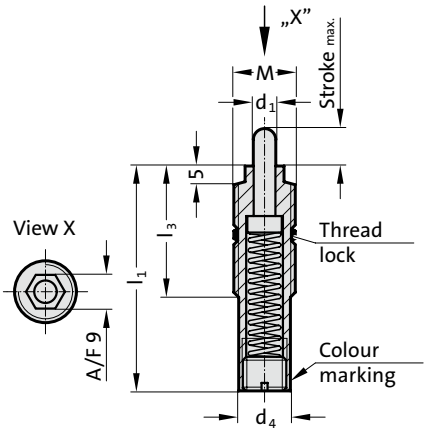

Description:

Spring plungers are used as ejectors, damper pins, fixing and retaining pins in many sectors of the tool-, jig- and fixture-making industries. Assembly requires the use of special FIBRO insertion tool (2470.10.11). The spring-loaded pins are hardened.

2470.10. .1 Spring plunger, standard spring force, VDI 3004, Colour marking: yellow

Order No	d_1	d_4	M	l_1	l_3	Stroke max.	Spring rate [N/mm]	Spring force [N] initial	Spring force [N] final
2470.10.010.060.1	6	13.4	16x2	60	35	10	0.95	3.8	13.3
2470.10.010.016.060.1	6	13.4	16x1.5	60	35	10	0.95	3.8	13.3
2470.10.015.060.1	6	13.4	16x2	60	35	15	2	10	40
2470.10.015.016.060.1	6	13.4	16x1.5	60	35	15	2	10	40
2470.10.020.080.1	6	13.4	16x2	80	35	20	1.38	6.9	34.5
2470.10.020.016.080.1	6	13.4	16x1.5	80	35	20	1.38	6.9	34.5
2470.10.030.080.1	6	13.4	16x2	80	35	30	1.3	6.5	45.5
2470.10.030.016.080.1	6	13.4	16x1.5	80	35	30	1.3	6.5	45.5
2470.10.030.120.1	6	13.4	16x2	120	35	30	0.73	18	40
2470.10.030.016.120.1	6	13.4	16x1.5	120	35	30	0.73	18	40
2470.10.040.150.1	6	13.4	16x2	150	35	40	0.6	13.2	37.2
2470.10.040.016.150.1	6	13.4	16x1.5	150	35	40	0.6	13.2	37.2
2470.10.050.150.1	6	13.4	16x2	150	35	50	0.6	13.2	43.2
2470.10.050.016.150.1	6	13.4	16x1.5	150	35	50	0.6	13.2	43.2
2470.10.060.150.1	6	13.4	16x2	150	35	60	0.6	13.2	49.2
2470.10.060.016.150.1	6	13.4	16x1.5	150	35	60	0.6	13.2	49.2
2470.10.070.200.1	6	13.4	16x2	200	35	70	0.44	9.68	40.5
2470.10.070.016.200.1	6	13.4	16x1.5	200	35	70	0.44	9.68	40.5
2470.10.080.200.1	6	13.4	16x2	200	35	80	0.44	9.68	44.8
2470.10.080.016.200.1	6	13.4	16x1.5	200	35	80	0.44	9.68	44.8

Spring plunger, standard spring force, VDI 3004, Colour marking: yellow

2470.10. .016. .1

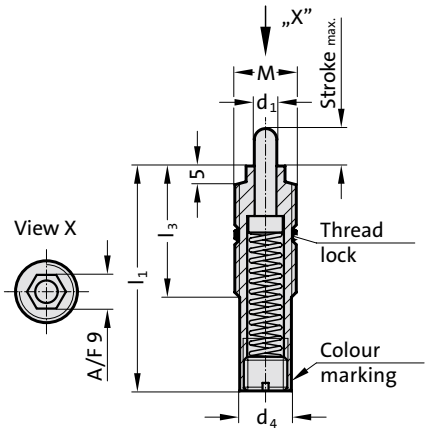

Mounting example

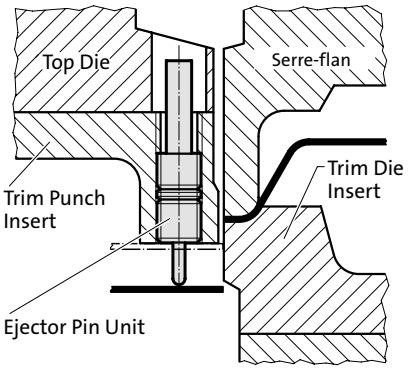



Description:

Spring ejectors are used as ejectors, damper pins, fixing and retaining pins in many sectors of the tool-, jig- and fixture-making industries. Assembly requires the use of special FIBRO insertion tool (2470.10.11). The spring-loaded pins are hardened.

2470.10. .016. .1 Spring plunger, standard spring force, VDI 3004, Colour marking: yellow

Order No	d_1	d_4	M	l_1	l_3	Stroke max.	Spring rate [N/mm]	Spring force [N] initial	Spring force [N] final
2470.10.010.016.060.1	6	13.4	16x1.5	60	35	10	0.95	3.8	13.3
2470.10.015.016.060.1	6	13.4	16x1.5	60	35	15	2	10	40
2470.10.020.016.080.1	6	13.4	16x1.5	80	35	20	1.38	6.9	34.5
2470.10.030.016.080.1	6	13.4	16x1.5	80	35	30	1.3	6.5	45.5
2470.10.030.016.120.1	6	13.4	16x1.5	120	35	30	0.73	18	40
2470.10.040.016.150.1	6	13.4	16x1.5	150	35	40	0.6	13.2	37.2
2470.10.050.016.150.1	6	13.4	16x1.5	150	35	50	0.6	13.2	43.2
2470.10.060.016.150.1	6	13.4	16x1.5	150	35	60	0.6	13.2	49.2
2470.10.070.016.200.1	6	13.4	16x1.5	200	35	70	0.44	9.68	40.5
2470.10.080.016.200.1	6	13.4	16x1.5	200	35	80	0.44	9.68	44.8

Spring plunger, medium spring force, VDI 3004, Colour marking: white



Mounting example

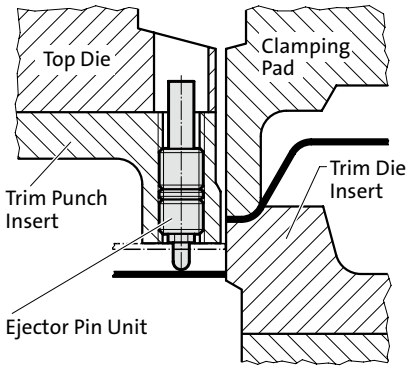

2470.10. .3

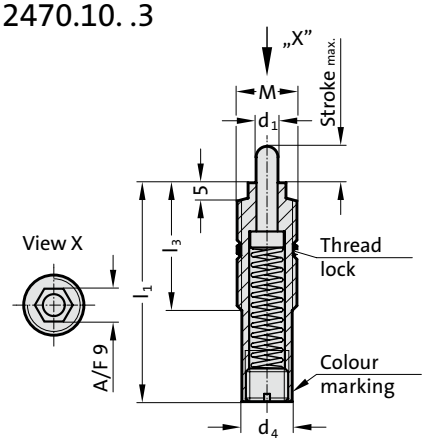

Description:

Spring plungers are used as ejectors, damper pins, fixing and retaining pins in many sectors of the tool-, jig- and fixture-making industries. Assembly requires the use of special FIBRO insertion tool (2470.10.11). The spring-loaded pins are hardened.

2470.10. .3 Spring plunger, medium spring force, VDI 3004, Colour marking: white

Order No	d_1	d_4	M	l_1	l_3	Stroke max.	Spring rate [N/mm]	Spring force [N] initial	Spring force [N] final
2470.10.020.080.3	6	13.4	16x2	80	35	20	3.02	15.1	75.6
2470.10.020.016.080.3	6	13.4	16x1.5	80	35	20	3.02	15.1	75.6

Spring plunger, medium spring force, VDI 3004, Colour marking: white

2470.10. .016. .3

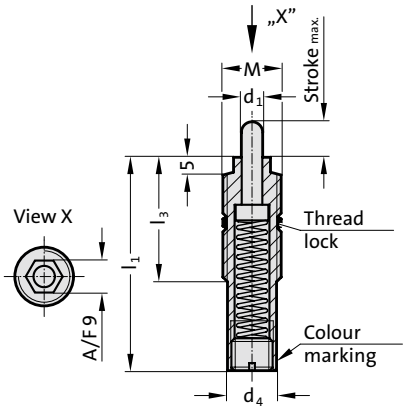

Mounting example

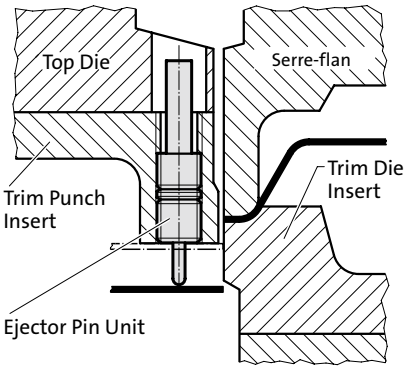



Description:

Spring ejectors are used as ejectors, damper pins, fixing and retaining pins in many sectors of the tool-, jig- and fixture-making industries. Assembly requires the use of special FIBRO insertion tool (2470.10.11). The spring-loaded pins are hardened.

2470.10. .016. .3 Spring plunger, medium spring force, VDI 3004, Colour marking: white

Order No	d_1	d_4	M	l_1	l_3	Stroke max.	Spring rate [N/mm]	Spring force [N] initial	Spring force [N] final
2470.10.020.016.080.3	6	13.4	16x1.5	80	35	20	3.02	15.1	75.6

Spring plunger, increased spring force, VDI 3004, Colour marking: red



Mounting example

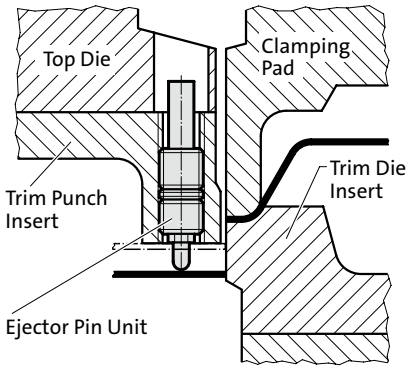

2470.10. .2

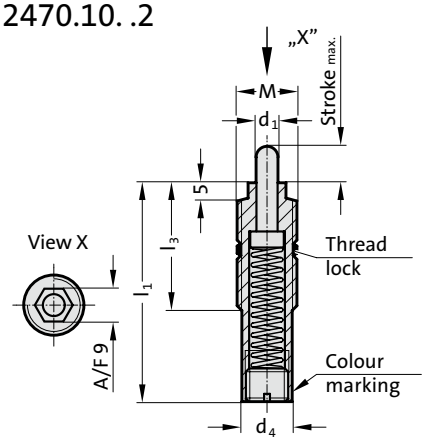

Description:

Spring plungers are used as ejectors, damper pins, fixing and retaining pins in many sectors of the tool-, jig- and fixture-making industries. Assembly requires the use of special FIBRO insertion tool (2470.10.11). The spring-loaded pins are hardened.

2470.10. .2 Spring plunger, increased spring force, VDI 3004, Colour marking: red

Order No	d_1	d_4	M	l_1	l_3	Stroke max.	Spring rate [N/mm]	Spring force [N] initial	Spring force [N] final
2470.10.010.060.2	6	13.4	16x2	60	35	10	3.25	13	45.5
2470.10.010.016.060.2	6	13.4	16x1.5	60	35	10	3.25	13	45.5
2470.10.015.060.2	6	13.4	16x2	60	35	15	2.6	15	56
2470.10.015.016.060.2	6	13.4	16x1.5	60	35	15	2.6	15	56
2470.10.020.080.2	6	13.4	16x2	80	35	20	6.9	34.5	172.5
2470.10.020.016.080.2	6	13.4	16x1.5	80	35	20	6.9	34.5	172.5
2470.10.030.120.2	6	13.4	16x2	120	35	30	2	20	80
2470.10.030.016.120.2	6	13.4	16x1.5	120	35	30	2	20	80
2470.10.030.150.2	6	13.4	16x2	150	35	30	2.55	56.1	132.6
2470.10.030.016.150.2	6	13.4	16x1.5	150	35	30	2.55	56.1	132.6
2470.10.040.150.2	6	13.4	16x2	150	35	40	2.55	56.1	158.1
2470.10.040.016.150.2	6	13.4	16x1.5	150	35	40	2.55	56.1	158.1
2470.10.050.200.2	6	13.4	16x2	200	35	50	1.61	19.3	99.9
2470.10.050.016.200.2	6	13.4	16x1.5	200	35	50	1.61	19.3	99.9
2470.10.060.200.2	6	13.4	16x2	200	35	60	1.61	19.3	116.1
2470.10.060.016.200.2	6	13.4	16x1.5	200	35	60	1.61	19.3	116.1
2470.10.070.200.2	6	13.4	16x2	200	35	70	1.61	19.3	132.1
2470.10.070.016.200.2	6	13.4	16x1.5	200	35	70	1.61	19.3	132.1
2470.10.080.200.2	6	13.4	16x2	200	35	80	0.94	25	100.1
2470.10.080.016.200.2	6	13.4	16x1.5	200	35	80	0.94	25	100.1

Spring plunger, increased spring force, VDI 3004, Colour marking: red

2470.10. .016. .2

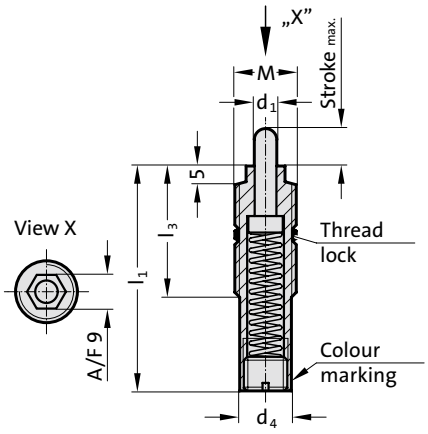

Mounting example

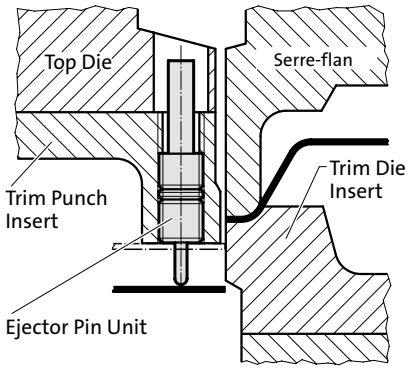



Description:

Spring ejectors are used as ejectors, damper pins, fixing and retaining pins in many sectors of the tool-, jig- and fixture-making industries. Assembly requires the use of special FIBRO insertion tool (2470.10.11). The spring-loaded pins are hardened.

2470.10. .016. .2 Spring plunger, increased spring force, VDI 3004, Colour marking: red

Order No	d_1	d_4	M	l_1	l_3	Stroke max.	Spring rate [N/mm]	Spring force [N] initial	Spring force [N] final
2470.10.010.016.060.2	6	13.4	M16x1.5	60	35	10	3.25	13	45.5
2470.10.015.016.060.2	6	13.4	M16x1.5	60	35	15	2.6	15	56
2470.10.020.016.080.2	6	13.4	M16x1.5	80	35	20	6.9	34.5	172.5
2470.10.030.016.120.2	6	13.4	M16x1.5	120	35	30	2	20	80
2470.10.030.016.150.2	6	13.4	M16x1.5	150	35	30	2.55	56.1	132.6
2470.10.040.016.150.2	6	13.4	M16x1.5	150	35	40	2.55	56.1	158.1
2470.10.050.016.200.2	6	13.4	M16x1.5	200	35	50	1.61	19.3	99.9
2470.10.060.016.200.2	6	13.4	M16x1.5	200	35	60	1.61	19.3	116.1
2470.10.070.016.200.2	6	13.4	M16x1.5	200	35	70	1.61	19.3	132.1
2470.10.080.016.200.2	6	13.4	M16x1.5	200	35	80	0.94	25	100.1

Spring plunger, with spring loaded ball, with slot, standard spring force



2471.01.

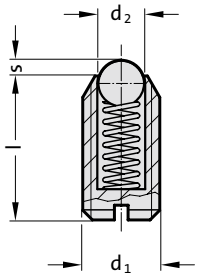

Material:

Sleeve: Free machining steel, burnished
Ball: Hardened ball bearing steel
Spring: Nirosta

Note:

For locking and for pressing upwards or downwards.
Temperature operating range: max. 250°C

2471.01. Spring plunger, with spring loaded ball, with slot, standard spring force

Order No	d_1	l	s	d_2	Spring force [N] initial	Spring force [N] final
2471.01.003	M3	7	0.4	1.5	3	4.5
2471.01.004	M4	9	0.8	2.5	8.5	14
2471.01.005	M5	12	0.9	3	8	14
2471.01.006	M6	14	1	3.5	11	18
2471.01.008	M8	16	1.5	4.5	18	31
2471.01.010	M10	19	2	6	24	45
2471.01.012	M12	22	2.5	8	26	49
2471.01.016	M16	24	3.5	10	41	86
2471.01.020	M20	30	4.5	12	56	111
2471.01.024	M24	34	5.5	15	81	151



2471.31.

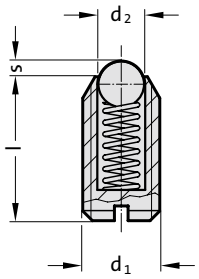

Material:

Sleeve: Nirosta 1.4305
Ball: Nirosta, hardened
Spring: Nirosta

Note:

For locking and for pressing upwards or downwards.
Admissible temperature range: max. 250°C

2471.31. Spring plunger, with spring loaded ball, with slot, standard spring force

Order No	d_1	l	s	d_2	Spring force [N] initial	Spring force [N] final
2471.31.003	M3	7	0.4	1.5	3	4.5
2471.31.004	M4	9	0.8	2.5	8.5	14
2471.31.005	M5	12	0.9	3	8	14
2471.31.006	M6	14	1	3.5	11	18
2471.31.008	M8	16	1.5	4.5	18	31
2471.31.010	M10	19	2	6	24	45
2471.31.012	M12	22	2.5	8	26	49
2471.31.016	M16	24	3.5	10	41	86
2471.31.020	M20	30	4.5	12	56	111
2471.31.024	M24	34	5.5	15	81	151

subject to alterations

Spring plunger, with spring loaded ball, with slot, increased spring force

2471.02.

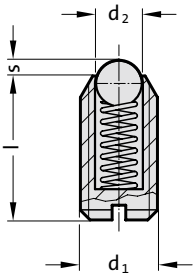



2471.02. Spring plunger, with spring loaded ball, with slot, increased spring force

Order No	d_1	l	s	d_2	Spring force [N] initial	Spring force [N] final
2471.02.005	M5	12	0.9	3	15	22
2471.02.006	M6	14	1	3.5	19	28
2471.02.008	M8	16	1.5	4.5	36	62
2471.02.010	M10	19	2	6	57	104
2471.02.012	M12	22	2.5	8	61	110
2471.02.016	M16	24	3.5	10	68	142
2471.02.020	M20	30	4.5	12	84	166
2471.02.024	M24	34	5.5	15	127	237

Material:
Sleeve: Free machining steel, burnished
Ball: Hardened ball bearing steel
Spring: Nirosta

Note:
For locking and for pressing upwards or downwards.
Admissible temperature range: max. 250°C
Identification of increased spring force by two longitudinal marks on the sleeve.

2471.32.

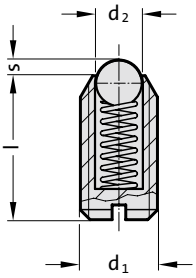



2471.32. Spring plunger, with spring loaded ball, with slot, increased spring force

Order No	d_1	l	s	d_2	Spring force [N] initial	Spring force [N] final
2471.32.005	M5	12	0.9	3	15	22
2471.32.006	M6	14	1	3.5	19	28
2471.32.008	M8	16	1.5	4.5	36	62
2471.32.010	M10	19	2	6	57	104
2471.32.012	M12	22	2.5	8	61	110
2471.32.016	M16	24	3.5	10	68	142
2471.32.020	M20	30	4.5	12	84	166
2471.32.024	M24	34	5.5	15	127	237

Material:
Sleeve: Nirosta 1.4305
Ball: Nirosta, hardened
Spring: Nirosta

Note:
For locking and for pressing upwards or downwards.
Admissible temperature range: max. 250°C.
Identification of increased spring force by two longitudinal marks on the sleeve.

Spring plunger, with spring loaded ball, with hexagon socket, standard spring force



2471.03.

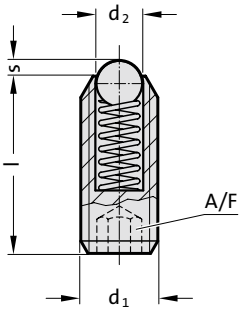

Material:

Sleeve: Free machining steel, burnished
Ball: Hardened ball bearing steel
Spring: Nirosta

Note:

For locking and for pressing upwards or downwards.
Temperature operating range: max. 250°C

2471.03. Spring plunger, with spring loaded ball, with hexagon socket, standard spring force

Order No	d_1	d_2	A/F	l	s	Spring force [N] initial	Spring force [N] final
2471.03.003	M3	1.5	1.5	8	0.4	3	4.5
2471.03.004	M4	2.5	2	12	0.8	8.5	14
2471.03.005	M5	3	2.5	14	0.9	8	14
2471.03.006	M6	3.5	3	15	1	11	18
2471.03.008	M8	4.5	4	18	1.5	18	31
2471.03.010	M10	6	5	23	2	24	45
2471.03.012	M12	8	6	26	2.5	26	49
2471.03.016	M16	10	8	33	3.5	41	86
2471.03.020	M20	12	10	43	4.5	56	111
2471.03.024	M24	15	12	48	5.5	81	151



2471.33.

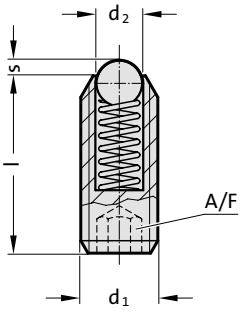

Material:

Sleeve: Nirosta 1.4305
Ball: Nirosta, hardened
Spring: Nirosta

Note:

For locking and for pressing upwards or downwards.
Admissible temperature range: max. 250°C

2471.33. Spring plunger, with spring loaded ball, with hexagon socket, standard spring force

Order No	d_1	d_2	A/F	l	s	Spring force [N] initial	Spring force [N] final
2471.33.003	M3	1.5	1.5	8	0.4	3	4.5
2471.33.004	M4	2.5	2	12	0.8	8.5	14
2471.33.005	M5	3	2.5	14	0.9	8	14
2471.33.006	M6	3.5	3	15	1	11	18
2471.33.008	M8	4.5	4	18	1.5	18	31
2471.33.010	M10	6	5	23	2	24	45
2471.33.012	M12	8	6	26	2.5	26	49
2471.33.016	M16	10	8	33	3.5	41	86
2471.33.020	M20	12	10	43	4.5	56	111
2471.33.024	M24	15	12	48	5.5	81	151

subject to alterations

Spring plunger, with spring loaded ball, with hexagon socket, increased spring force

2471.04.

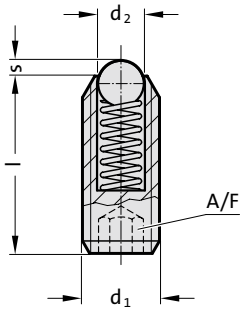



2471.04. Spring plunger, with spring loaded ball, with hexagon socket, increased spring force

Order No	d_1	d_2	A/F	l	s	Spring force [N] initial	Spring force [N] final
2471.04.005	M5	3	2.5	14	0.9	15	22
2471.04.006	M6	3.5	3	15	1	19	28
2471.04.008	M8	4.5	4	18	1.5	36	62
2471.04.010	M10	6	5	23	2	57	104
2471.04.012	M12	8	6	26	2.5	61	110
2471.04.016	M16	10	8	33	3.5	68	142
2471.04.020	M20	12	10	43	4.5	84	166
2471.04.024	M24	15	12	48	5.5	127	237

Material:
Sleeve: Free machining steel, burnished
Ball: Hardened ball bearing steel
Spring: Nirosta

Note:
For locking and for pressing upwards or downwards.
Temperature operating range: max. 250°C
Identification of increased spring force by two longitudinal marks on the sleeve.

2471.34.

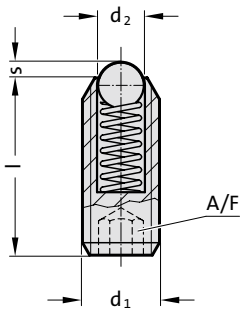



2471.34. Spring plunger, with spring loaded ball, with hexagon socket, increased spring force

Order No	d_1	d_2	A/F	l	s	Spring force [N] initial	Spring force [N] final
2471.34.005	M5	3	2.5	14	0.9	15	22
2471.34.006	M6	3.5	3	15	1	19	28
2471.34.008	M8	4.5	4	18	1.5	36	62
2471.34.010	M10	6	5	23	2	57	104
2471.34.012	M12	8	6	26	2.5	61	110
2471.34.016	M16	10	8	33	3.5	68	142
2471.34.020	M20	12	10	43	4.5	84	166
2471.34.024	M24	15	12	48	5.5	127	237

Material:
Sleeve: Nirosta 1.4305
Ball: Nirosta, hardened
Spring: Nirosta

Note:
For locking and for pressing upwards or downwards.
Admissible temperature range: max. 250°C.
Identification of increased spring force by two longitudinal marks on the sleeve.

Spring plunger, with spring loaded ball, with slot, standard spring force



2471.05.

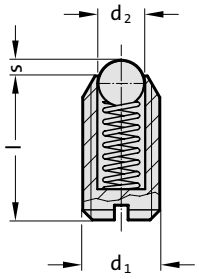

Material:
Sleeve: Delrin blue (POM)
Ball: Delrin white (POM)
Spring: Nirosta

Note:
For locking and for pressing upwards or downwards.
Temperature operating range: -30°C to +50°C

2471.05. Spring plunger, with spring loaded ball, with slot, standard spring force

Order No	d_1	l	s	d_2	Spring force [N] initial	Spring force [N] final
2471.05.006	M6	14	0.9	3.5	12	17
2471.05.008	M8	16	1.5	5	20	35
2471.05.010	M10	19	1.9	6	25	45



2471.35.

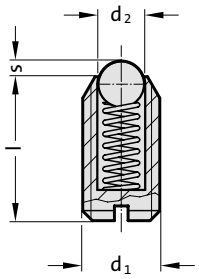

Material:
Sleeve: Delrin blue (POM)
Ball: Nirosta, hardened
Spring: Nirosta

Note:
For locking and for pressing upwards or downwards.
Admissible temperature range: -30°C to +50°C.

2471.35. Spring plunger, with spring loaded ball, with slot, standard spring force

Order No	d_1	l	s	d_2	Spring force [N] initial	Spring force [N] final
2471.35.006	M6	14	0.9	3.5	12	17
2471.35.008	M8	16	1.5	5	20	35
2471.35.010	M10	19	1.9	6	25	45

subject to alterations

Spring plunger, with spring loaded pin, with slot, standard spring force

2472.01.

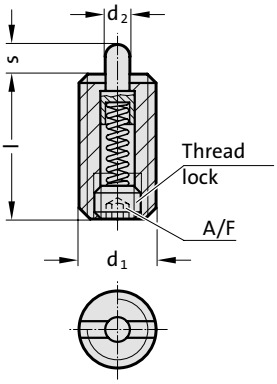



2472.01. Spring plunger, with spring loaded pin, with slot, standard spring force

Order No	d_1	d_2	l	s	A/F	Spring force [N] initial	Spring force [N] final
2472.01.003	M3	1	12	1	0.7	2	4
2472.01.004	M4	1.5	15	1.5	1.3	4.5	16
2472.01.005	M5	2.4	18	2.3	1.5	6	19
2472.01.006	M6	2.7	20	2.5	2	6	19
2472.01.008	M8	3.5	22	3	2.5	10	39
2472.01.010	M10	4	22	3	3	10	39
2472.01.012	M12	6	28	4	4	12	53
2472.01.016	M16	7.5	32	5	5	45	100
2472.01.020	M20	10	40	7	6	52	125
2472.01.024	M24	12	52	10	8	70	170

Material:
Sleeve: Free machining steel, burnished
Pin: Free machining steel hardened, burnished
Spring: Nirosta

Note:
For locking and for pressing upwards or downwards. Removable with hexagon socket screw key or slotted screwdriver.

2472.31.

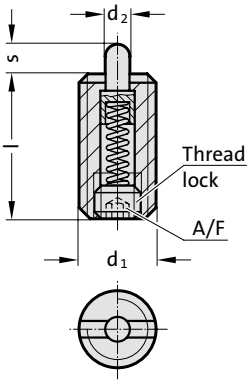



2472.31. Spring plunger, with spring loaded pin, with slot, standard spring force

Order No	d_1	d_2	l	s	A/F	Spring force [N] initial	Spring force [N] final
2472.31.004	M4	1.5	15	1.5	1.3	4.5	16
2472.31.005	M5	2.4	18	2.3	1.5	6	19
2472.31.006	M6	2.7	20	2.5	2	6	19
2472.31.008	M8	3.5	22	3	2.5	10	39
2472.31.010	M10	4	22	3	3	10	39
2472.31.012	M12	6	28	4	4	12	53
2472.31.016	M16	7.5	32	5	5	45	100
2472.31.020	M20	10	40	7	6	52	125

Material:
Sleeve: Nirosta 1.4305
Pin: Nirosta 1.4305
Spring: Nirosta

Note:
For locking and for pressing upwards or downwards. Removable with hexagon socket screw key or slotted screwdriver.

Spring plunger, with spring loaded pin, with slot, standard spring force



2472.21.

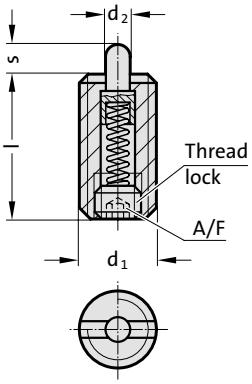

Material:

Sleeve: Free machining steel, burnished
Pin: Delrin white (POM)
Spring: Nirosta

Note:

For locking and for pressing upwards or downwards. Removable with hexagon socket screw key or slotted screwdriver.

2472.21. Spring plunger, with spring loaded pin, with slot, standard spring force

Order No	d_1	d_2	l	s	A/F	Spring force [N] initial	Spring force [N] final
2472.21.004	M4	1.5	15	1.5	1.3	4.5	16
2472.21.005	M5	2.4	18	2.3	1.5	6	19
2472.21.006	M6	2.7	20	2.5	2	6	19
2472.21.008	M8	3.5	22	3	2.5	10	39
2472.21.010	M10	4	22	3	3	10	39
2472.21.012	M12	6	28	4	4	12	53
2472.21.016	M16	7.5	32	5	5	45	100



2472.22.

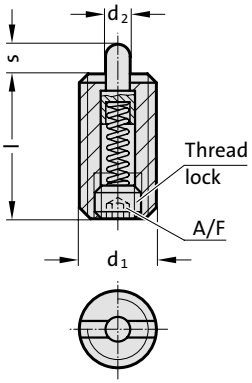

Material:

Sleeve: Nirosta 1.4305
Pin: Delrin white (POM)
Spring: Nirosta

Note:

For locking and for pressing upwards or downwards. Removable with hexagon socket screw key or slotted screwdriver.

2472.22. Spring plunger, with spring loaded pin, with slot, standard spring force

Order No	d_1	d_2	l	s	A/F	Spring force [N] initial	Spring force [N] final
2472.22.004	M4	1.5	15	1.5	1.3	4.5	16
2472.22.005	M5	2.4	18	2.3	1.5	6	19
2472.22.006	M6	2.7	20	2.5	2	6	19
2472.22.008	M8	3.5	22	3	2.5	10	39
2472.22.010	M10	4	22	3	3	10	39
2472.22.012	M12	6	28	4	4	12	53
2472.22.016	M16	7.5	32	5	5	45	100

subject to alterations

Spring plunger, with spring loaded pin, with hexagon socket, standard spring force

2472.03.

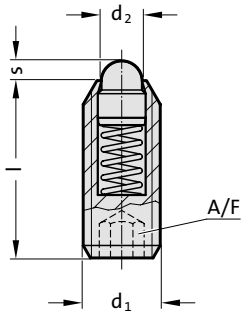



2472.03. Spring plunger, with spring loaded pin, with hexagon socket, standard spring force

Order No	d_1	d_2	l	s	A/F	Spring force [N] initial	Spring force [N] final
2472.03.004	M4	1.8	12	1.5	2	4.5	12.5
2472.03.005	M5	2.4	14	2	2.5	5	13
2472.03.006	M6	2.7	15	2	3	6	17
2472.03.008	M8	3.8	18	2	4	16	33
2472.03.010	M10	4.5	23	2.5	5	19	42
2472.03.012	M12	6	26	3.5	6	22	57
2472.03.016	M16	8.5	33	4.5	8	38	78
2472.03.020	M20	10	43	6.5	10	39	81
2472.03.024	M24	13	48	8	12	72	155

Material:
Sleeve: Free machining steel, burnished
Pin: Free machining steel hardened, burnished
Spring: Nirosta

Note:
For locking and for pressing upwards or downwards.
Temperature operating range: max. 250°C

2472.33.

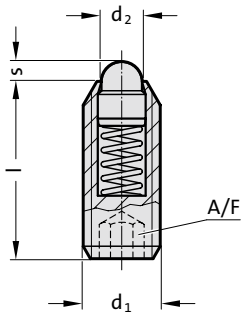



2472.33. Spring plunger, with spring loaded pin, with hexagon socket, standard spring force

Order No	d_1	d_2	l	s	A/F	Spring force [N] initial	Spring force [N] final
2472.33.004	M4	1.8	12	1.5	2	4.5	12.5
2472.33.005	M5	2.4	14	2	2.5	5	13
2472.33.006	M6	2.7	15	2	3	6	17
2472.33.008	M8	3.8	18	2	4	16	33
2472.33.010	M10	4.5	23	2.5	5	19	42
2472.33.012	M12	6	26	3.5	6	22	57
2472.33.016	M16	8.5	33	4.5	8	38	78
2472.33.020	M20	10	43	6.5	10	39	81
2472.33.024	M24	13	48	8	12	72	155

Material:
Sleeve: Nirosta 1.4305
Pin: Nirosta 1.4305
Spring: Nirosta

Hinweis:
For locking and for pressing upwards or downwards.
Admissible temperature range: max. 250°C

Spring plunger, with spring loaded pin and seal, with hexagon socket, standard spring force



2472.07.

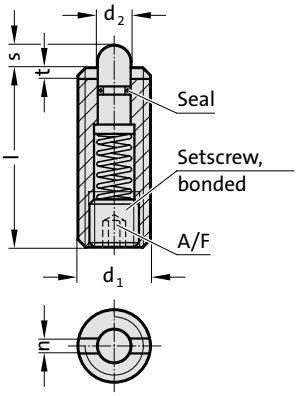

Material:

Sleeve: Free machining steel, burnished
Pin: Free machining steel hardened, burnished
Spring: Nirosta

Note:

For locking and for pressing upwards or downwards. The seal prevents the ingress of liquids into the forcing pin. Assembly and dismantling using hexagon socket key and slotted screwdriver.
Temperature operating range: –30°C up to 80°C

2472.07. Spring plunger, with spring loaded pin and seal, with hexagon socket, standard spring force

Order No	d_1	d_2	l	n	s	t	A/F	Spring force [N] initial	Spring force [N] final
2472.07.008	M8	3.8	26	1.5	3	1.4	2.5	9	24
2472.07.010	M10	4	28	1.5	3.5	1.4	3	15	30
2472.07.012	M12	6	35	2.7	4	2	4	24	50
2472.07.016	M16	7.5	40	3.2	5	2.5	5	36	58



2472.37.

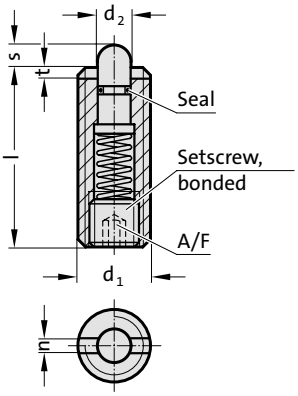

Material:

Sleeve: Nirosta 1.4305
Pin: Nirosta 1.4305
Spring: Nirosta

Note:

For locking and for pressing upwards or downwards. The seal prevents the ingress of liquids into the forcing pin. Assembly and dismantling using hexagon socket key and slotted screwdriver.
Temperature operating range: –30°C up to 80°C

2472.37. Spring plunger, with spring loaded pin and seal, with hexagon socket, standard spring force

Order No	d_1	d_2	l	n	s	t	A/F	Spring force [N] initial	Spring force [N] final
2472.37.008	M8	3.8	26	1.5	3	1.4	2.5	9	24
2472.37.010	M10	4	28	1.5	3.5	1.4	3	15	30
2472.37.012	M12	6	35	2.7	4	2	4	24	50
2472.37.016	M16	7.5	40	3.2	5	2.5	5	36	58

subject to alterations

Spring plunger, with spring loaded pin, with slot, increased spring force
Spring plunger, with spring loaded pin and seal, with hexagon socket, increased spring force

2472.02.

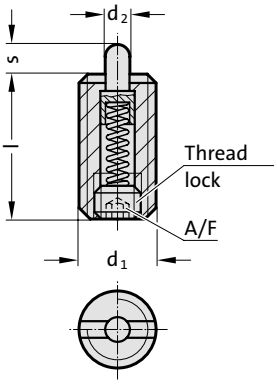



2472.02. Spring plunger, with spring loaded pin, with slot, increased spring force

Order No	d_1	d_2	A/F	l	s	Spring force [N] initial	Spring force [N] final
2472.02.005	M5	2.4	1.5	18	2.3	11	40
2472.02.006	M6	2.7	2	20	2.5	15	43
2472.02.008	M8	3.5	2.5	22	3	20	75
2472.02.010	M10	4	3	22	3	20	75
2472.02.012	M12	6	4	28	4	45	120
2472.02.016	M16	7.5	5	32	5	64	160
2472.02.020	M20	10	6	40	7	75	195
2472.02.024	M24	12	8	52	10	75	245

Material:
Sleeve: Free machining steel, burnished
Pin: Free machining steel hardened, burnished
Spring: Nirosta

Note:
For locking and for pressing upwards or downwards. Removable with hexagon socket screw key or slotted screwdriver.
Identification of increased spring force by two longitudinal marks on the sleeve.

2472.08.

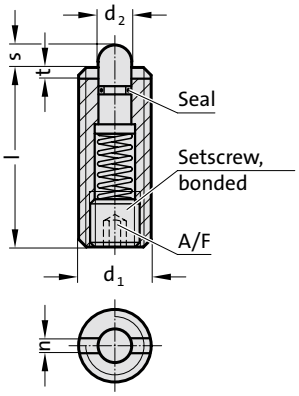



2472.08. Spring plunger, with spring loaded pin and seal, with hexagon socket, increased spring force

Order No	d_1	d_2	l	n	s	t	A/F	Spring force [N] initial	Spring force [N] final
2472.08.008	M8	3.8	26	1.5	3	1.4	2.5	17	39
2472.08.010	M10	4	28	1.5	3.5	1.4	3	22	43
2472.08.012	M12	6	35	2.7	4	2	4	40	80
2472.08.016	M16	7.5	40	3.2	5	2.5	5	44	113

Material:
Sleeve: Free machining steel, burnished
Pin: Free machining steel hardened, burnished
Spring: Nirosta

Note:
For locking and for pressing upwards or downwards. The seal prevents the ingress of liquids into the forcing pin. Assembly and dismantling using hexagon socket key and slotted screwdriver.
Temperature operating range: –30°C up to 80°C
Identification of increased spring force by two longitudinal marks on the sleeve.

Spring plunger, with spring loaded pin, with hexagon socket, increased spring force



2472.04.

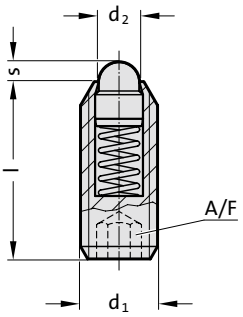

Material:

Sleeve: Free machining steel, burnished
Pin: Free machining steel hardened, burnished
Spring: Nirosta

Note:

For locking and for pressing upwards or downwards.
Temperature operating range: max. 250°C
Identification of increased spring force by two longitudinal marks on the sleeve.

2472.04. Spring plunger, with spring loaded pin, with hexagon socket, increased spring force

Order No	d_1	d_2	l	s	A/F	Spring force [N] initial	Spring force [N] final
2472.04.006	M6	2.7	15	2	3	11	25
2472.04.008	M8	3.8	18	2	4	23	59
2472.04.010	M10	4.5	23	2.5	5	20	54
2472.04.012	M12	6	26	3.5	6	38	96
2472.04.016	M16	8.5	33	4.5	8	50	100
2472.04.020	M20	10	43	6.5	10	52	133
2472.04.024	M24	13	48	8	12	91	223



2472.34.

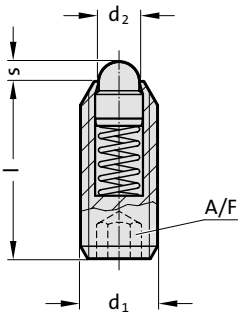

Material:

Sleeve: Nirosta 1.4305
Pin: Nirosta 1.4305
Spring: Nirosta

Note:

For locking and for pressing upwards or downwards.
Temperature operating range: max. 250°C
Identification of increased spring force by two longitudinal marks on the sleeve.

2472.34. Spring plunger, with spring loaded pin, with hexagon socket, increased spring force

Order No	d_1	d_2	l	s	A/F	Spring force [N] initial	Spring force [N] final
2472.34.006	M6	2.7	15	2	3	11	25
2472.34.008	M8	3.8	18	2	4	23	59
2472.34.010	M10	4.5	23	2.5	5	20	54
2472.34.012	M12	6	26	3.5	6	38	96
2472.34.016	M16	8.5	33	4.5	8	50	100
2472.34.020	M20	10	43	6.5	10	52	133
2472.34.024	M24	13	48	8	12	91	223

subject to alterations

Spring plunger, with spring loaded pin, with slot, standard spring force

2472.05.

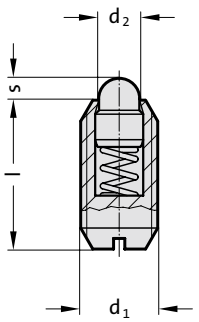



2472.05. Spring plunger, with spring loaded pin, with slot, standard spring force

Order No	d_1	d_2	l	s	Spring force [N] initial	Spring force [N] final
2472.05.004	4	1.8	9	1.5	4.5	12.5
2472.05.005	5	2.4	12	2	5	13
2472.05.006	6	2.7	14	2	6	17
2472.05.008	8	3.8	16	2	16	33
2472.05.010	10	4.5	19	2.5	19	42
2472.05.012	12	6.2	22	3.5	22	57
2472.05.016	16	8.5	24	4.5	38	78
2472.05.020	20	10	30	6.5	39	81
2472.05.024	24	13	34	8	72	155

Material:
Sleeve: Free machining steel, burnished
Pin: Free machining steel hardened, burnished
Spring: Nirosta

Note:
For locking and for pressing upwards or downwards.
Temperature operating range: max. 250°C

2472.35.

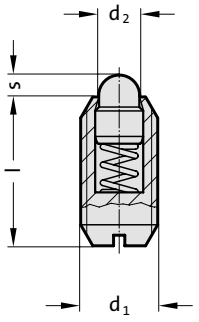



2472.35. Spring plunger, with spring loaded pin, with slot, standard spring force

Order No	d_1	d_2	l	s	Spring force [N] initial	Spring force [N] final
2472.35.004	4	1.8	9	1.5	4.5	12.5
2472.35.005	5	2.4	12	2	5	13
2472.35.006	6	2.7	14	2	6	17
2472.35.008	8	3.8	16	2	16	33
2472.35.010	10	4.5	19	2.5	19	42
2472.35.012	12	6.2	22	3.5	22	57
2472.35.016	16	8.5	24	4.5	38	78
2472.35.020	20	10	30	6.5	39	81
2472.35.024	24	13	34	8	72	155

Material:
Sleeve: Nirosta 1.4305
Pin: Nirosta 1.4305
Spring: Nirosta

Note:
For locking and for pressing upwards or downwards.
Temperature operating range: max. 250°C

Spring plunger, with spring loaded pin, with slot, increased spring force



2472.06.

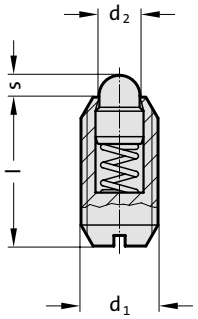

Material:

Sleeve: Free machining steel, burnished
Pin: Free machining steel hardened, burnished
Spring: Nirosta

Note:

For locking and for pressing upwards or downwards.
Temperature operating range: max. 250°C
Identification of increased spring force by two longitudinal marks on the sleeve.

2472.06. Spring plunger, with spring loaded pin, with slot, increased spring force

Order No	d_1	d_2	l	s	Spring force [N] initial	Spring force [N] final
2472.06.006	M6	2.7	14	2	11	25
2472.06.008	M8	3.8	16	2	23	59
2472.06.010	M10	4.5	19	2.5	20	54
2472.06.012	M12	6.2	22	3.5	38	96
2472.06.016	M16	8.5	24	4.5	50	100
2472.06.020	M20	10	30	6.5	52	133
2472.06.024	M24	13	34	8	91	223



2472.36.

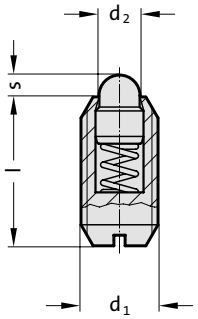

Material:

Sleeve: Nirosta 1.4305
Pin: Nirosta 1.4305
Spring: Nirosta

Note:

For locking and for pressing upwards or downwards.
Temperature operating range: max. 250°C
Identification of increased spring force by two longitudinal marks on the sleeve.

2472.36. Spring plunger, with spring loaded pin, with slot, increased spring force

Order No	d_1	d_2	l	s	Spring force [N] initial	Spring force [N] final
2472.36.006	M6	2.7	14	2	11	25
2472.36.008	M8	3.8	16	2	23	59
2472.36.010	M10	4.5	19	2.5	20	54
2472.36.012	M12	6.2	22	3.5	38	96
2472.36.016	M16	8.5	24	4.5	50	100
2472.36.020	M20	10	30	6.5	52	133
2472.36.024	M24	13	34	8	91	223

subject to alterations

Spring plunger, with spring loaded pin, straight version, with collar
Spring plunger, with spring loaded ball, straight version

2473.01.

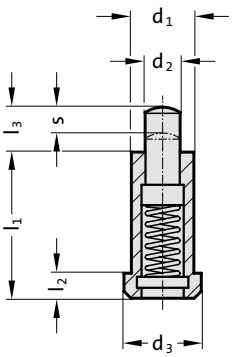



2473.01. Spring plunger, with spring loaded pin, straight version, with collar

Order No	d_1	d_2	d_3	l_1	l_2	l_3	s	Spring force [N] initial	Spring force [N] final
2473.01.006	6	2.7	8	20	3.2	6	3.5	10	22
2473.01.008	8	3.9	10	24	3.2	8	4.5	30	88
2473.01.010	10	5.9	13	30	4	10	5.5	42	110
2473.01.012	12	7.9	16	36	5	12	6.5	50	130

Material:
Sleeve: Free machining steel, burnished
Pin: Steel, case hardened, burnished
Spring: Nirosta

Note:
For use in toolmaking as forcing pins and spring loaded limit stops.
Neither the threaded cartridge nor any of its components can escape from the mounting.
Temperature operating range: max. 250 °C

2473.02.

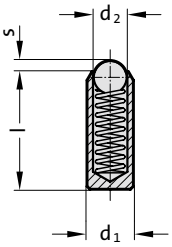



2473.02. Spring plunger, with spring loaded ball, straight version

Order No	d_1	d_2	l	s	Spring force [N] initial	Spring force [N] final
2473.02.030	3	2	7	0.65	4.5	7.5
2473.02.035	3.5	2.5	9	0.8	6	14.5
2473.02.040	4	3	11	0.9	8	14
2473.02.045	4.5	3.2	12	0.95	9.5	16.5
2473.02.050	5	3.5	13	1	11	18
2473.02.055	5.5	4	14	1.2	15.5	25
2473.02.060	6	4.5	15	1.5	18	31

Material:
Sleeve: Nirosta 1.4305
Pin: Nirosta hardened
Spring: Nirosta

Note:
For locking and for pressing upwards or downwards.
Temperature operating range: max. 250 °C

Spring plunger, with spring loaded ball, straight version, with collar



2475.01.

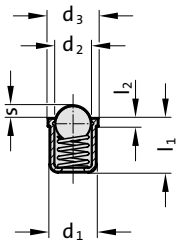

Material:
Sleeve: Delrin blue (POM)
Ball: Delrin white (POM)
Spring: Nirosta

Note:
For locking and for pressing upwards or downwards.
Temperature operating range: –30°C to +50°C

2475.01. Spring plunger, with spring loaded ball, straight version, with collar

Order No	d_1	d_2	d_3	l_1	l_2	s	Spring force [N] initial	Spring force [N] final
2475.01.004	4	3	4.6	5	1	0.8	2.5	6.5
2475.01.005	5	4	5.6	6	1	1	6	9.4
2475.01.006	6	5	6.5	7	1	1.6	6.5	13
2475.01.008	8	6.5	8.5	9	1	1.9	8	18
2475.01.010	10	8	11	13.5	1.5	2.4	12	23
2475.01.012	12	10	13	16	1.5	3.3	13	25



2475.02.

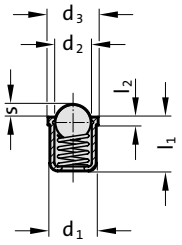

Material:
Sleeve: Delrin blue (POM)
Ball: Nirosta, hardened
Spring: Nirosta

Note:
For locking and for pressing upwards or downwards.
Temperature operating range: –30°C to +50°C

2475.02. Spring plunger, with spring loaded ball, straight version, with collar

Order No	d_1	d_2	d_3	l_1	l_2	s	Spring force [N] initial	Spring force [N] final
2475.02.004	4	3	4.6	5	1	0.8	2.5	6.5
2475.02.005	5	4	5.6	6	1	1	6	9.4
2475.02.006	6	5	6.5	7	1	1.6	6.5	13
2475.02.008	8	6.5	8.5	9	1	1.9	8	18
2475.02.010	10	8	11	13.5	1.5	2.4	12	23
2475.02.012	12	10	13	16	1.5	3.3	13	25

subject to alterations

Spring plunger, with spring loaded ball, straight version, with collar

2475.03.

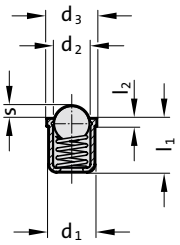



2475.03. Spring plunger, with spring loaded ball, straight version, with collar

Order No	d_1	d_2	d_3	l_1	l_2	s	Spring force [N] initial	Spring force [N] final
2475.03.004	4	3	4.5	5	1	0.8	3	6
2475.03.005	5	4	5.5	6	1	1	4	6.5
2475.03.006	6	5	6.5	7	1	1.6	6	11.5
2475.03.008	8	6.5	8.5	9	1	1.9	8	12.5

Material:
Sleeve: Brass
Ball: Nirosta, hardened
Spring: Nirosta

Note:
For locking and for pressing upwards or downwards.
Temperature operating range: max. 250°C

2475.04.

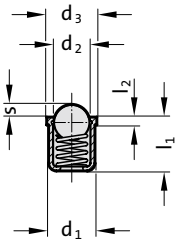



2475.04. Spring plunger, with spring loaded ball, straight version, with collar

Order No	d_1	d_2	d_3	l_1	l_2	s	Spring force [N] initial	Spring force [N] final
2475.04.004	4	3	4.6	5	0.9	1	2.5	6
2475.04.005	5	4	5.6	6	0.9	1.4	3	6.5
2475.04.006	6	5	6.5	7	1	1.8	5.5	11.5
2475.04.008	8	6.5	8.5	9	1.1	2.4	7	12.5
2475.04.010	10	8.5	11	13.5	1.7	3.3	8.5	18.5
2475.04.012	12	10	13	16	2.3	4	12	26.5

Material:
Sleeve: Nirosta 1.4303
Ball: Nirosta, hardened
Spring: Nirosta

Note:
For locking and for pressing upwards or downwards.
Temperature operating range: max. 250°C

Accessories for Spring Plungers



2470.10.11
Insertion Tool

for 2470.10.



2470.12.010.017
Insertion Tool

for 2479. and 3479.



2472.11.003 up to 2472.11.020
Thrust pad driver

for 2472.01./.02.

Order No	for thread
2472.11.003	M 3
2472.11.004	M 4
2472.11.005	M 5
2472.11.006	M 6
2472.11.008	M 8
2472.11.010	M 10
2472.11.012	M 12
2472.11.016	M 16
2472.11.020	M 20



2472.11.024
Thrust pad driver

for 2472.01./.02.

Order No	for thread
2472.11.024	M 24



Stripping unit, Stock lifter, Lifting unit, Spring ram

Stripping unit, wall and bottom mounting



2477. .1.01

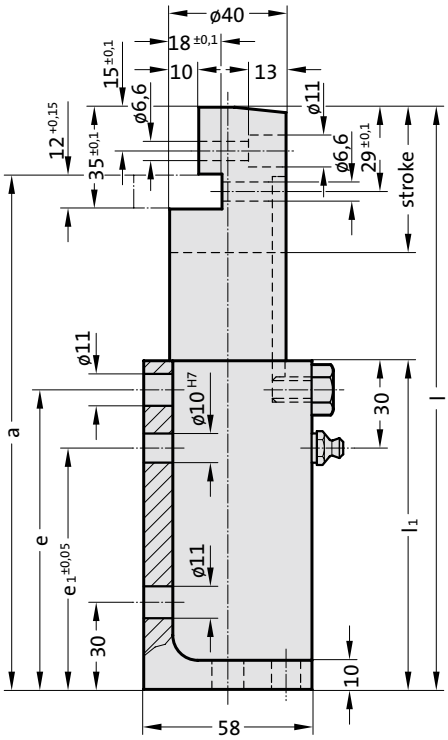

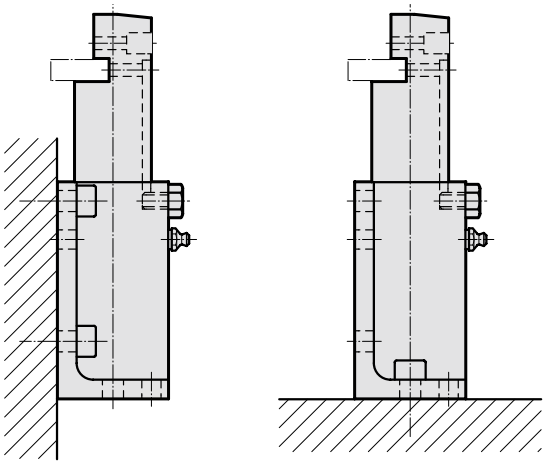

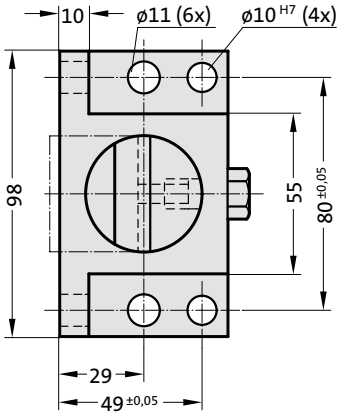

2477. .1.01 Stripping unit, wall and bottom mounting

Order No	Stroke	Initial spring force [daN]	l	l_1	a	e	e_1
2477.050.00050.1.01	50	50	200	113	177	103	83
2477.050.00100.1.01	50	100	200	113	177	103	83
2477.050.00150.1.01	50	150	200	113	177	103	83
2477.050.00200.1.01	50	200	200	113	177	103	83
2477.080.00050.1.01	80	50	260	143	237	133	113
2477.080.00100.1.01	80	100	260	143	237	133	113
2477.080.00150.1.01	80	150	260	143	237	133	113
2477.080.00200.1.01	80	200	260	143	237	133	113

subject to alterations

Stripping unit, flanged mounting

2477. .1.02

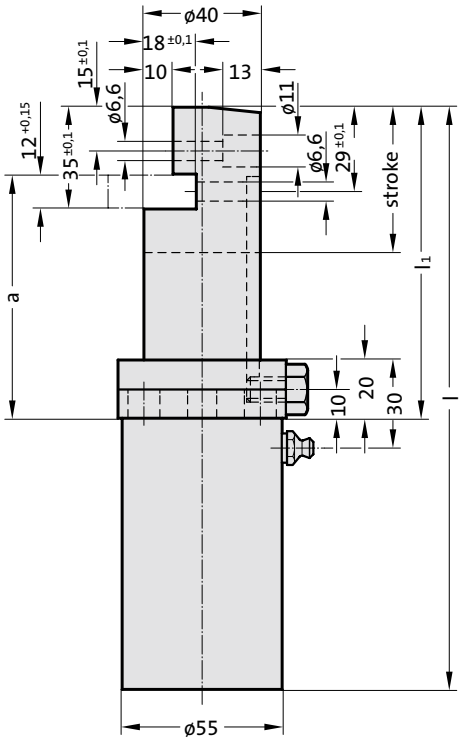



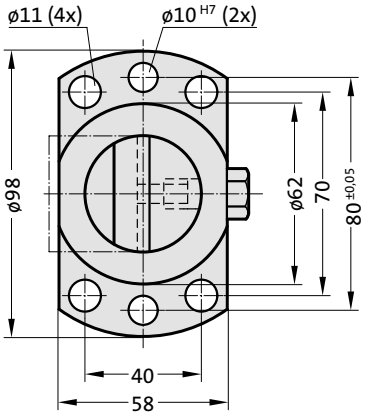

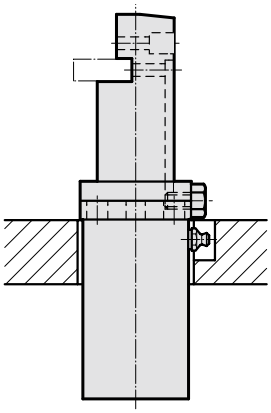

2477. .1.02 Stripping unit, flanged mounting

Order No	Stroke	Initial spring force [daN]	l	l_1	a
2477.050.00050.1.02	50	50	200	107	84
2477.050.00100.1.02	50	100	200	107	84
2477.050.00150.1.02	50	150	200	107	84
2477.050.00200.1.02	50	200	200	107	84
2477.080.00050.1.02	80	50	260	137	114
2477.080.00100.1.02	80	100	260	137	114
2477.080.00150.1.02	80	150	260	137	114
2477.080.00200.1.02	80	200	260	137	114

FIBRO

Stock lifter



2478.10.
Stock lifter

Order No*	Stroke$_{max.}$	l$_{min.}$	l
2478.10.□□□□□.025	25	121	146
2478.10.□□□□□.050	50	146	196
2478.10.□□□□□.080	80	176	256
2478.10.□□□□□.100	100	196	296
2478.10.□□□□□.125	125	221	346
2478.10.□□□□□.150	150	246	396

*complete with initial spring force

Spring force marking:

Initial spring force [daN] - Pressure [bar]

.00050. - 28
.00100. - 56
.00150. - 84
.00200. - 113
.00250. - 141
.00320. - 180

2478.10.

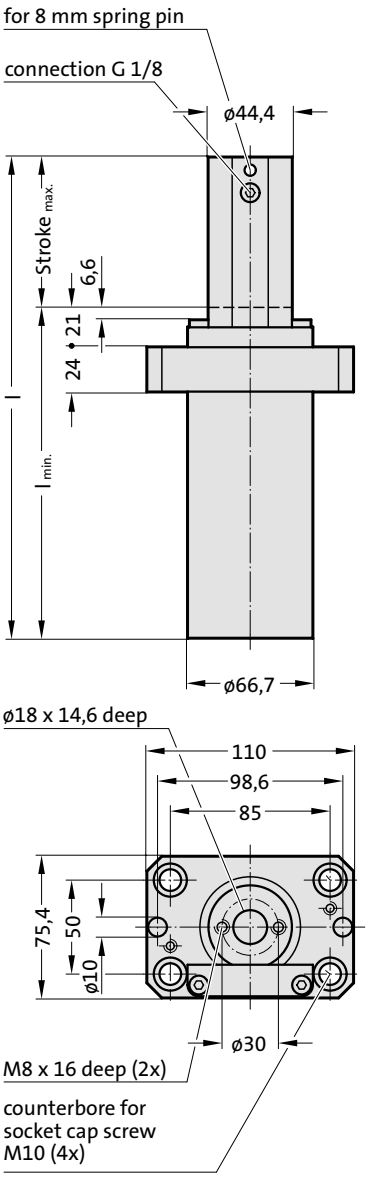

Description:

All component lifters in the various gas spring classes are of the same design and the different spring forces are achieved solely by means of different gas pressures. The pressure can be topped up or reduced via the piston rod.

Note:

Pressure medium: Nitrogen - N_2
Max. filling pressure: 180 bar
Min. filling pressure: 25 bar
Working temperature: 0°C bis +80°C
Temperature related force increase: ± 0,3%/°C
Max. recommended extensions per minute: approx. ca. 80-100 (at 20°C)
Max. piston speed: 1,6 m/s
Order No for spare parts kit: 2478.10.00320
Spring forces as per spring diagram.
Upon customers request, also available unfilled, Order No 2478.10.00000....

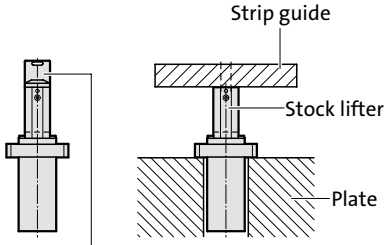

2478.10.00320.01 Fixing adapter order separately

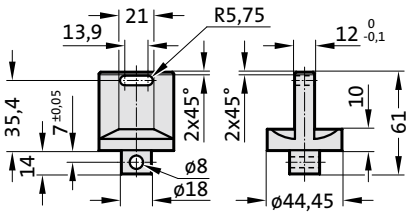

Initial spring force versus charge pressure

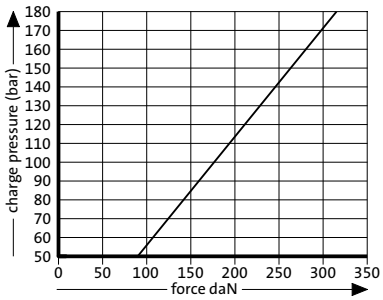

Spring force Diagram displacement versus stroke rise

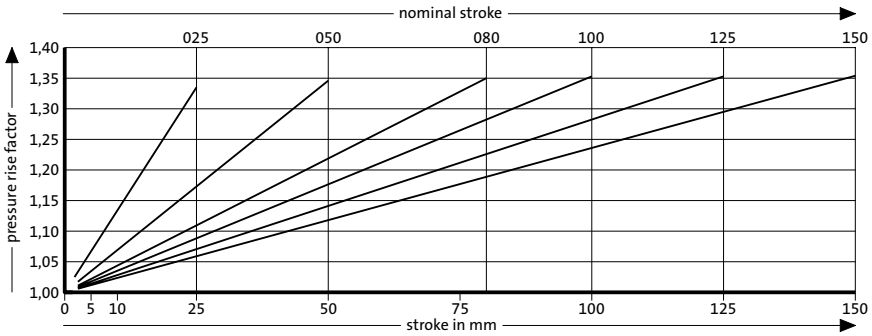

Pressure rise factor accounts for displacement but not external influences!

subject to alterations

Stock lifter

Description:

The cylinder base can be used for topping up and reducing gas pressure and for interconnection arrangements.

Note:

Stocklifters are equipped with a “PowerLine” 2487.12.00170. gas spring with no option for wear compensation, so complete replacement is required.

Pressure medium: Nitrogen – N_2
Max. filling pressure: 180 bar
Min. filling pressure: 25 bar
Working temperature: 0°C to +80°C
Temperature related force increase: ± 0,3%/°C
Max. recommended extensions per minute: approx. 40 to 100 (at 20°C)
Max. piston speed: 1,6 m/s
Max. effctive travel: 100%

Spring forces as per spring diagram.

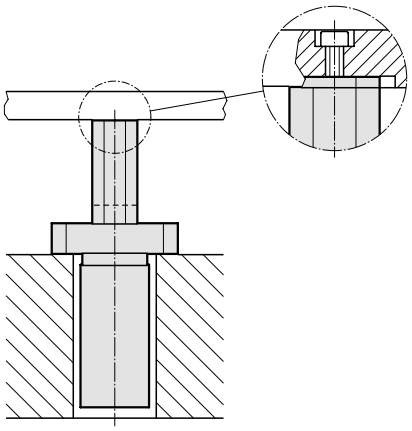

2478.30. . 1

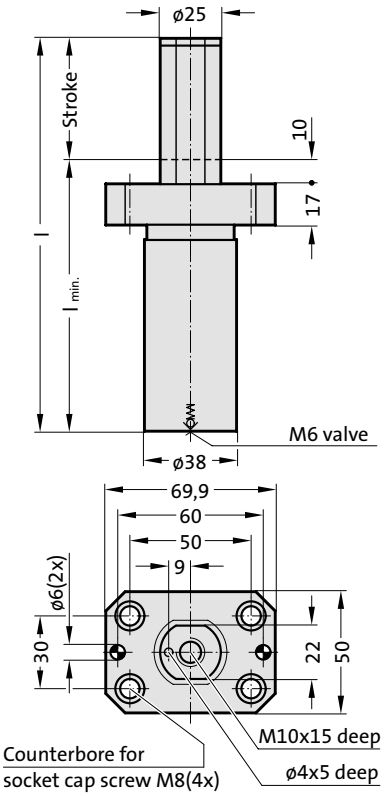



2478.30. .1
Stock lifter

Order No	Stroke$_{max.}$	l$_{min.}$	l
2478.30.00170.025.1	25	87	112
2478.30.00170.038.1	38	100	138
2478.30.00170.050.1	50	112	162
2478.30.00170.080.1	80	145	225
2478.30.00170.100.1	100	165	265
2478.30.00170.125.1	125	190	315

Initial spring force
versus charge pressure

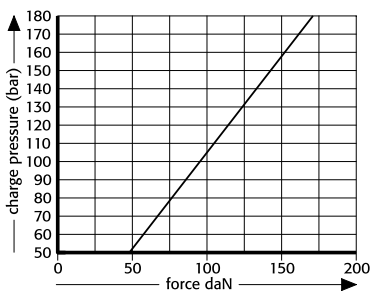

Spring force Diagram displacement
versus stroke rise

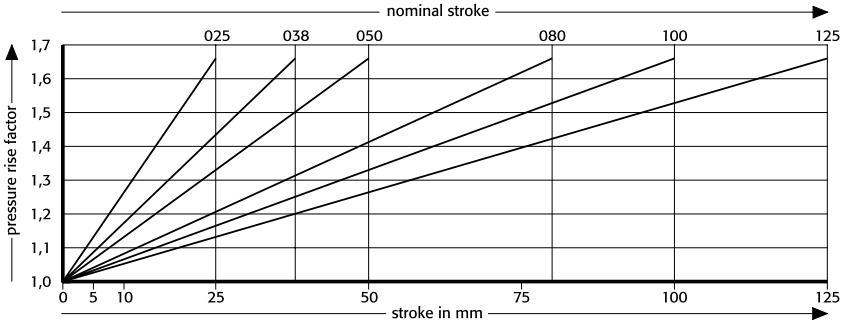

Pressure rise factor accounts for displacement but not external influences!

FIBRO

Stock lifter with attachment lug



2478.30. .2
Stock lifter with attachment lug

Order No	Stroke$_{max.}$	$l_{min.}$	l
2478.30.00170.025.2	25	102	127
2478.30.00170.038.2	38	115	153
2478.30.00170.050.2	50	127	177
2478.30.00170.080.2	80	160	240
2478.30.00170.100.2	100	180	280
2478.30.00170.125.2	125	205	330

2478.30. .2

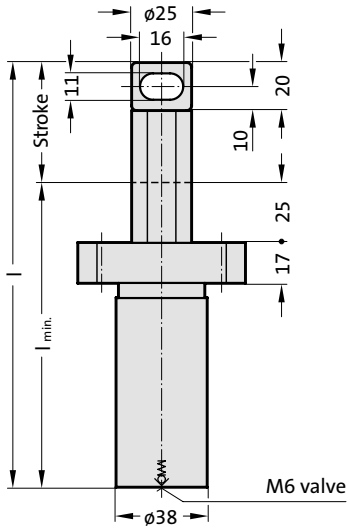

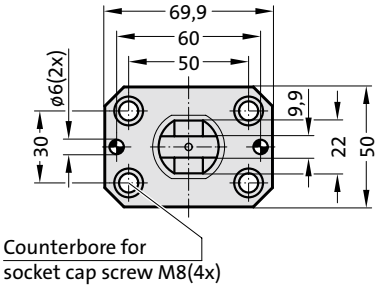

Description:

The cylinder base can be used for topping up and reducing gas pressure and for interconnection arrangements.

Note:

Stocklifters are equipped with a “PowerLine” 2487.12.00170. gas spring with no option for wear compensation, so complete replacement is required.

Pressure medium: Nitrogen – N_2
Max. filling pressure: 180 bar
Min. filling pressure: 25 bar
Working temperature: 0°C to +80°C
Temperature related force increase: ± 0,3%/°C
Max. recommended extensions per minute: approx. 40 to 100 (at 20°C)
Max. piston speed: 1,6 m/s
Max. effective travel: 100%

Spring forces as per spring diagram.

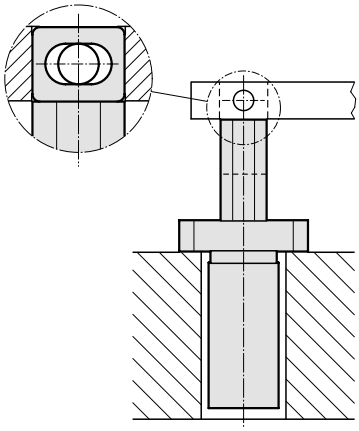

Initial spring force
versus charge pressure

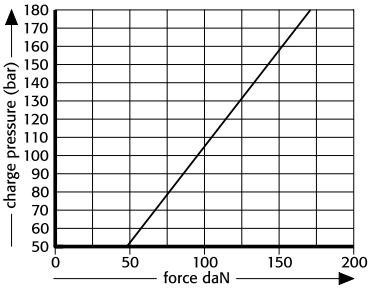

Spring force Diagram displacement
versus stroke rise

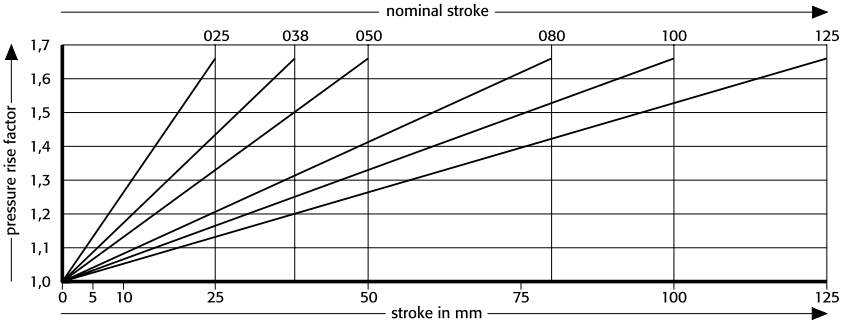

Pressure rise factor accounts for displacement but not external influences!

subject to alterations

Stripper

Description:

The stripper is used for stripping 2478.30.00170.3 of sheet metal parts after the forming operation (eg folding functions). Gas refill, reduce and composite assembly are possible over the cylinder tube sheet.

Note:

Strippers are equipped with a “Power Line” 2487.12.00170. gas spring with no option for wear compensation, so complete replacement is required.

Pressure medium: Nitrogen - N_2
Max. filling pressure: 180 bar
Min. filling pressure: 25 bar
Working temperature: 0°C at +80°C
Temp. related force increase: ± 0,3%/°C
Max. recommended extensions per minute: approx. 40-100 (at 20°C)
Max. piston speed: 1,6 m/s
Max. effective travel: 100%

Spring forces as per spring diagram.

2478.30. .3

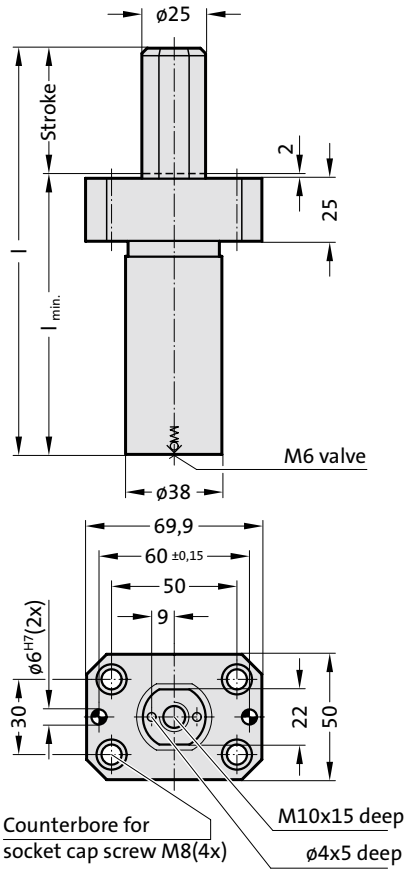



2478.30. .3
Stripper

Order No	Stroke$_{max.}$	$l_{min.}$	l
2478.30.00170.025.3	25	87	112
2478.30.00170.038.3	38	100	138
2478.30.00170.050.3	50	112	162
2478.30.00170.080.3	80	145	225
2478.30.00170.100.3	100	165	265
2478.30.00170.125.3	125	190	315

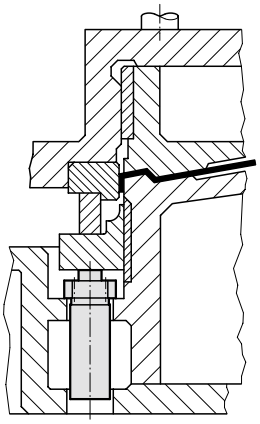

Initial spring force
versus charge pressure

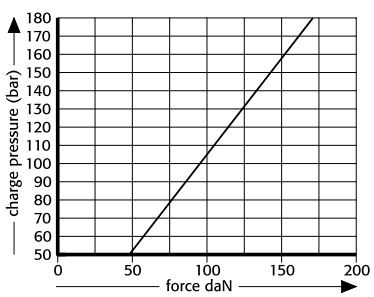

Spring force Diagram displacement
versus stroke rise

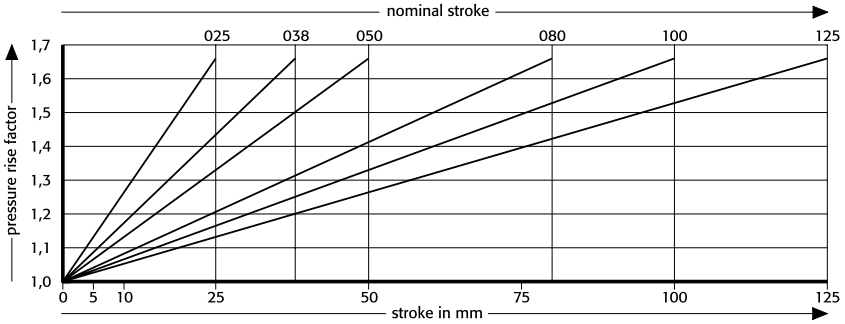

Pressure rise factor accounts for displacement but not external influences!

Lifting unit (not damped/damped) to Mercedes-Benz

2478.20.20.

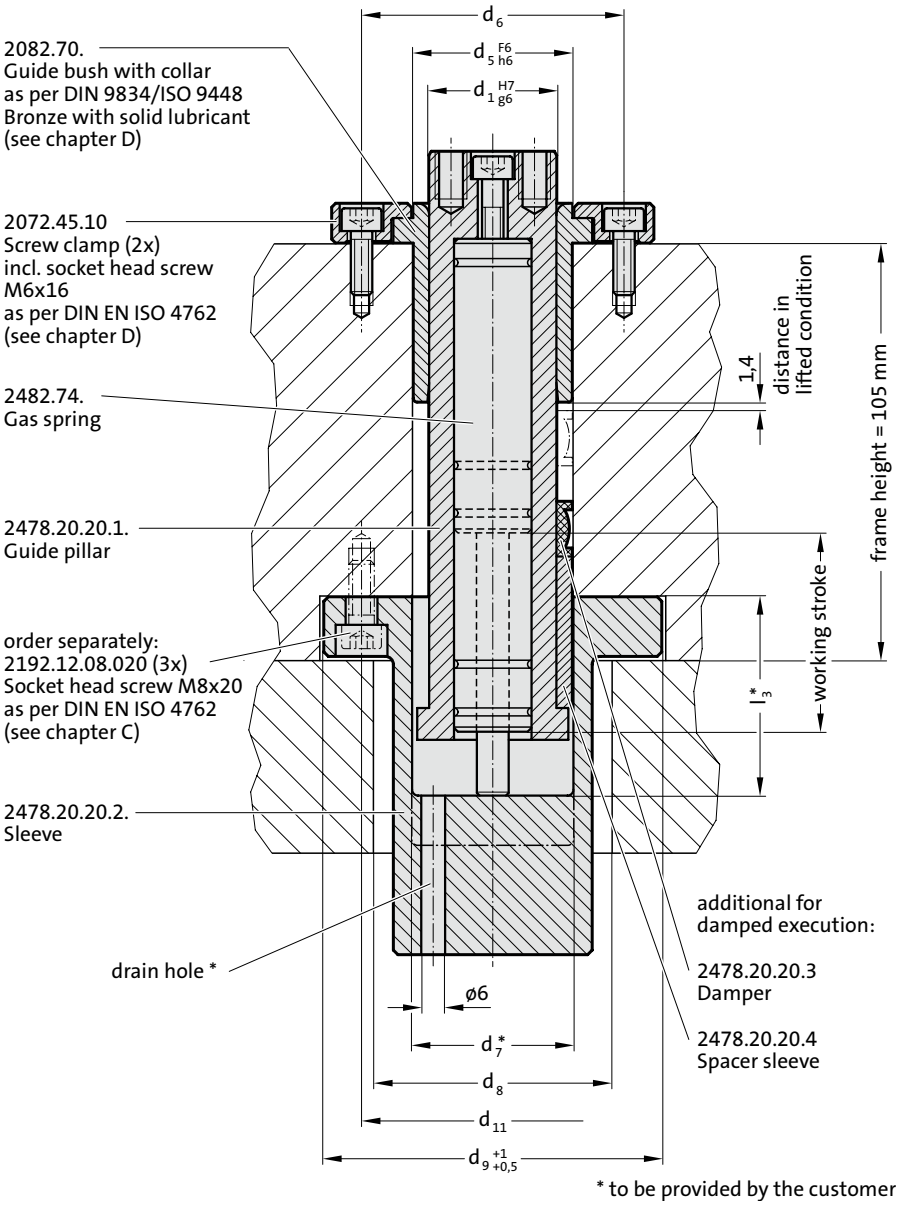

* to be provided by the customer



Note:

Frame height = 105 mm

Depending on the frame height and the installation type of the sleeve 2478.20.20.2. (l_3 - tapped bore in the frame or cut-out in the cast), the countersink varies for the determination of the lifting path.

Size 2* - type, damped

Maximum lifting path 66 mm
Lifting path 66 mm; Distance height 0 mm
Lifting path 30 mm; Distance height 36 mm

Size 3* - type, damped

Maximum lifting path 80 mm
Lifting path 80 mm; Distance height 47 mm
Lifting path 70 mm; Distance height 57 mm

In order to maintain the clearance of 1.4 mm in a raised state (dampener to bushing), a distance sleeve is to be used between the damper and guide post flange.

* Distance height determined at the customer (deliver length: 61 mm).

2478.20.20. Lifting unit (not damped/damped) to Mercedes-Benz

Size	working stroke	working stroke, damped	d_1	d_5	d_6	d_7*	d_8	d_9	d_{11}	l_3*
1	5 - 35	–	32	40	66	40	60	85	67	-
2	40 - 70	30 - 66	32	40	66	40	60	85	67	-
3	75 - 115	70 - 80	32	40	66	40	60	85	67	-

* to be provided by the customer

The lifting unit must be ordered in three sizes with the respective order numbers of the individual parts:

Size	1	2	3
Guide Pillar	2478.20.20.1.01	2478.20.20.1.02	2478.20.20.1.03
Sleeve	–	2478.20.20.2.02	2478.20.20.2.03
Guide bush	2082.70.032	2082.70.032	2082.70.032
Gas spring	2482.74.00090.038	2482.74.00090.080.1	2482.74.00090.125
Holding piece (2x) incl. socket head screw M6x16 DIN EN ISO 4762	2072.45.10	2072.45.10	2072.45.10
additional for damped execution:			
Damper	–	2478.20.20.3	2478.20.20.3
Spacer sleeve	–	2478.20.20.4	2478.20.20.4

Guide pillar for lifting unit to Mercedes-Benz



2478.20.20.1.

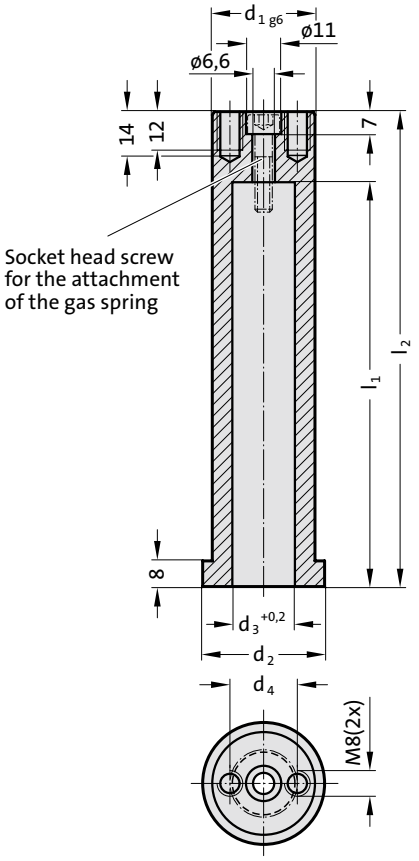

Material:

Steel, surface hardenedInduction hardened 60+3 HRCHardness penetration depth > 1.8 mm

Note:

The socket head screw for the attachment of the gas spring is included with delivery.

2478.20.20.1. Guide pillar for lifting unit to Mercedes-Benz

Order No	Size	d_1	d_2	d_3	d_4	l_1	l_2
2478.20.20.1.01	1	32	38	19.5	21	81	113
2478.20.20.1.02	2	32	38	19.5	21	126	148
2478.20.20.1.03	3	32	38	19.5	21	176	208

Sleeve for lifting unit to Mercedes-Benz

2478.20.20.2.

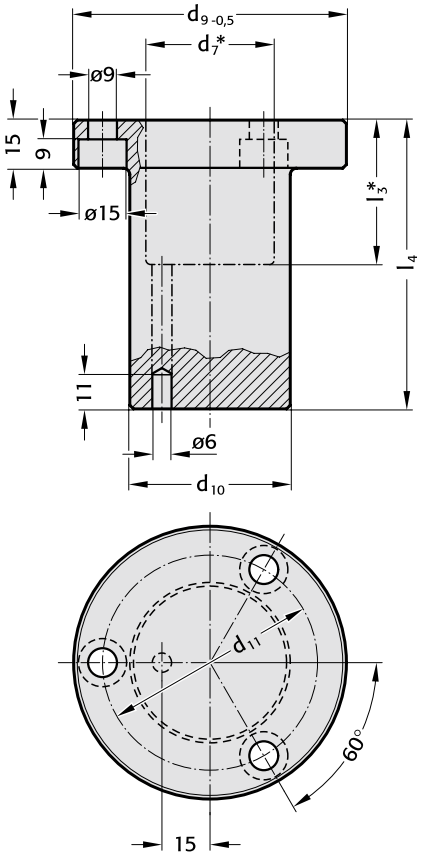



Material:
Steel

Note:
The sleeve is supplied without countersink. Integrating countersink d_7 (ø40) x l_3 (*to be provided by thecustomer) determines the lifting path. The drain hole is pre-drilled as a blind hole with a ø of 6 mm and must also be modified.

2478.20.20.2. Sleeve for lifting unit to Mercedes-Benz

Order No	Size	d_9	d_{10}	d_{11}	l_4
2478.20.20.2.02	2	85	50	67	90
2478.20.20.2.03	3	85	50	67	150

Damper for lifting units to Mercedes-Benz



2478.20.20.3

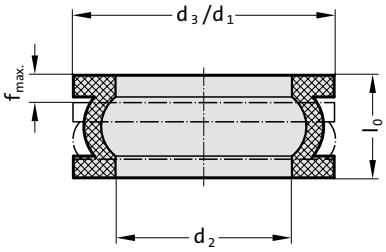

Description:

The damper element made of co-polyester elastomer is used in the jacking units in progressive dies in the automotive and white goods industry. Increasing stresses on screws and bolts are reduced by the low stress dampers. Reduced noise emission is also an additional positive side-effect. Two-ply dampers can be used depending on the mass or stroke.

Benefits:
- High absorption of force and energy
- Slight settlement
- Long service life and high level of operating safety
- Noise reduction
- High degree of effectiveness

Material:

Co-Polyester-Elastomer
Available in 55 Shore-D hardness levels.

Technical data:
Surroundings: Resistant to microbes, seawater, chemicals.
No absorption of water and no swelling.
Approved temperature range: -40°C to +90°C (-40°F to +194°F)

2478.20.20.3 Damper for lifting units to Mercedes-Benz

Order No	d_1	d_2	d_3	l_0	$f_{max.}$ in mm	W_3 in Nm/stroke*
2478.20.20.3	39.5	32.2	39.6	12.6	3.6	4

*Total energy per stroke

subject to alterations

Spacer sleeve for lifting units to Mercedes-Benz

2478.20.20.4

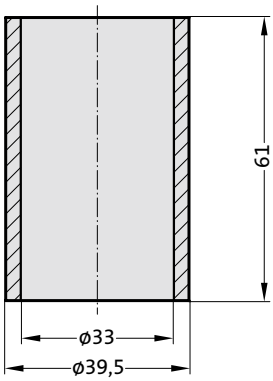



Material:
Steel, hardened

Note:
Height adjustment according to lifting path while using lifting unit 2478.20.20.

2478.20.20.4 Spacer sleeve for lifting units to Mercedes-Benz

FIBRO

Lifter, round with pilot pin hole to BMW standard

2478.20.15.10.

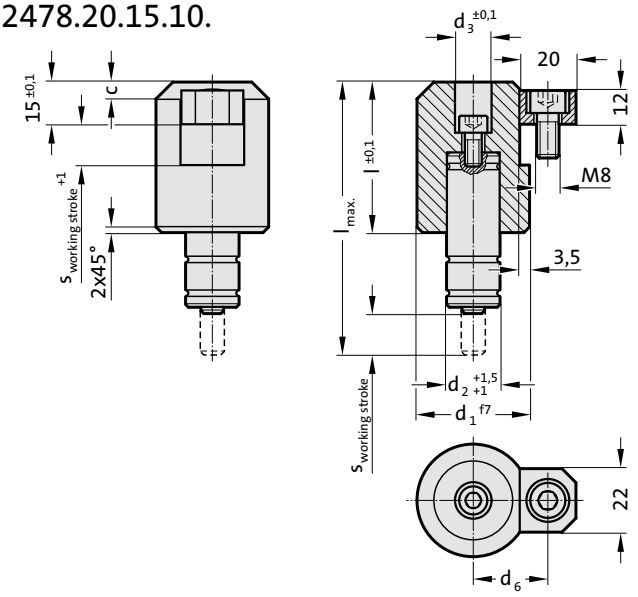

Execution:

Assembly consisting of:

- Lifter
- Gas spring
  – ∅ 19 mm (1) = 2482.74.00090.
  Spring force 90 daN
  or
  – ∅ 25 mm (2) = 2480.21.00200.
  Spring force 200 daN
- Screw clamp,
  incl. Socket head screw M8 × 16 to ISO 4762
- Socket head screw M6 × 12 to ISO 4762

Note:

*$S_{working\ stroke}$ suitable = max. allowable spring stroke minus 10 % stroke reserve of nominal stroke length,
from stroke of 50 mm only max. 5 mm.

on request, gas spring with a lower spring force available.

2478.20.15.10. Lifter, round with pilot pin hole to BMW Standard

			d_1	28	28	30	30	35	35	40	40	40	40	40	50	50	50	50
			d_2	19	19	19	19	25	25	19	19	19	25	25	19	19	25	25
			d_3	10.5	12.5	10.5	12.5	12.5	16.5	10.5	12.5	16.5	12.5	16.5	12.5	16.5	12.5	16.5
			d_6	20.5	20.5	21.5	21.5	24	24	26.5	26.5	26.5	26.5	26.5	31.5	31.5	31.5	31.5
			c	4x45°	4x45°	5x45°	5x45°	5x45°	5x45°	6x45°	6x45°	6x45°	6x45°	6x45°	8x45°	8x45°	8x45°	8x45°
l	$l_{max.}$	$*s_{working\ stroke}$	Stroke Order No (Part 3)								(Part 2)							
49	87	9	009	.111.	.112.	.121.	.122.	.232.	.233.	.141.	.142.	.143.	.242.	.243.	.152.	.153.	.252.	.253.
53.5	97	13.5	014	.111.	.112.	.121.	.122.	.232.	.233.	.141.	.142.	.143.	.242.	.243.	.152.	.153.	.252.	.253.
62.5	117	22.5	023	.111.	.112.	.121.	.122.	.232.	.233.	.141.	.142.	.143.	.242.	.243.	.152.	.153.	.252.	.253.
74	143	34	034	.111.	.112.	.121.	.122.	.232.	.233.	.141.	.142.	.143.	.242.	.243.	.152.	.153.	.252.	.253.
85	167	45	045	.111.	.112.	.121.	.122.	.232.	.233.	.141.	.142.	.143.	.242.	.243.	.152.	.153.	.252.	.253.
98.5	197	58.5	059	.111.	.112.	.121.	.122.	.232.	.233.	.141.	.142.	.143.	.242.	.243.	.152.	.153.	.252.	.253.
115	230	75	075	.111.	.112.	.121.	.122.	.232.	.233.	.141.	.142.	.143.	.242.	.243.	.152.	.153.	.252.	.253.
135	270	95	095	.111.	.112.	.121.	.122.	.232.	.233.	.141.	.142.	.143.	.242.	.243.	.152.	.153.	.252.	.253.
160	320	120	120	.111.	.112.	.121.	.122.	.232.	.233.	.141.	.142.	.143.	.242.	.243.	.152.	.153.	.252.	.253.

Ordering Code (example):

Order No: Part 1 Part 2 Part 3

2 4 7 8 . 2 0 . 1 5 . 1 0 . 1 5 3 . 0 0 9

$s_{working\ stroke}$	= Stroke - Order-No
d_3	= Order-No
10.5 mm	= (1)
12.5 mm	= (2)
16.5 mm	= (3)
d_1	= Order-No
28 mm	= (1)
30 mm	= (2)
35 mm	= (3)
40 mm	= (4)
50 mm	= (5)
d_2 – Gas spring	= Order-No
∅ 19 mm – 2482.74.00090.	= (1)
∅ 25 mm – 2480.21.00200.	= (2)
Assembly (lifter with pilot pin hole) to BMW Standard	
lifter, round with pilot pin hole	

subject to alterations

Lifter units with installation block according to BMW standard

Material: Steel

Execution:

Lifter unit with installation block comprises:

- Installation block
- Lifter
- Screw clamp
- Gas spring 2482.74.00090. or 2480.21.00200.
- Socket cap screw according to ISO 4762
  M6×20 (1x), M8×20 (1x), M8×25 (2x), M10×45 (2x)
- Dowel pin according to ISO 8735 ∅10×40 (2x)

Note:

Order separately (see installation example)

- 2478.20.15.23.: Lifter rail
- 2478.20.15.24.: Holding sleeve

on request, gas spring with a lower spring force available

2478.20.15.20.

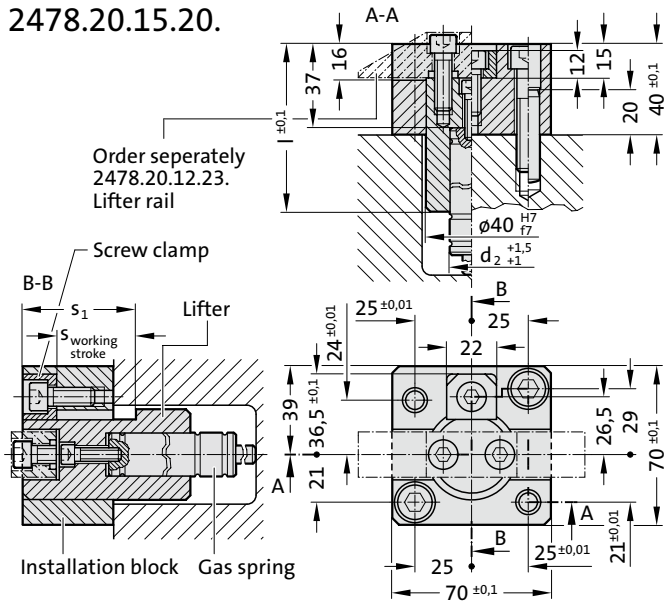

2478.20.15.20. Lifter Units with Installation Block according to BMW standard

			d_2 = ∅19		d_2 = ∅25	
l	$s_{working\ Stroke}$	s_1	Gas spring	Order No.	Gas spring	Order No.
49	9	25	2482.74.00090.010.2	2478.20.15.20.14.009	2480.21.00200.010	2478.20.15.20.24.009
53.5	13.5	29.5	2482.74.00090.015.2	2478.20.15.20.14.014	2480.21.00200.015	2478.20.15.20.24.014
62.5	22.5	38.5	2482.74.00090.025.2	2478.20.15.20.14.023	2480.21.00200.025	2478.20.15.20.24.023
74	34	50	2482.74.00090.038.2	2478.20.15.20.14.034	2480.21.00200.038	2478.20.15.20.24.034
85	45	61	2482.74.00090.050.2	2478.20.15.20.14.045	2480.21.00200.050	2478.20.15.20.24.045
98.5	58.5	74.5	2482.74.00090.063.2	2478.20.15.20.14.059	2480.21.00200.063	2478.20.15.20.24.059
115	75	91	2482.74.00090.080.2	2478.20.15.20.14.075	2480.21.00200.080	2478.20.15.20.24.075
135	95	111	2482.74.00090.100.2	2478.20.15.20.14.095	2480.21.00200.100	2478.20.15.20.24.095
160	120	136	2482.74.00090.125.2	2478.20.15.20.14.120	2480.21.00200.125	2478.20.15.20.24.120

Installation example:

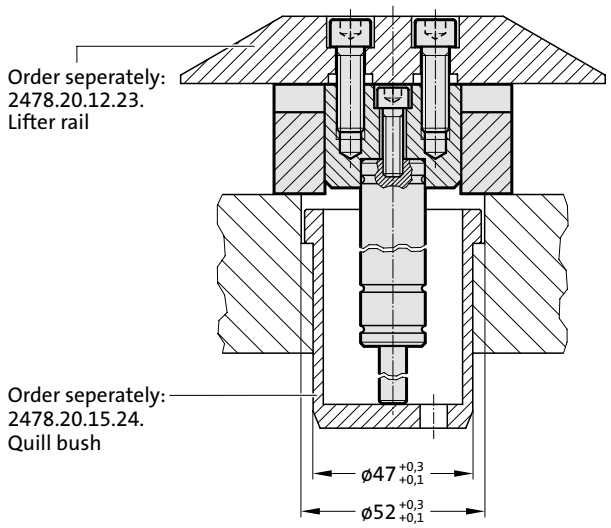

Lifter rail for lifter units to BMW standard
Holding sleeve for lifter units to BMW standard



2478.20.15.00.03

Centrierring
(Order-No. for reordering)

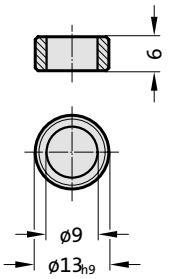

2478.20.15.23.

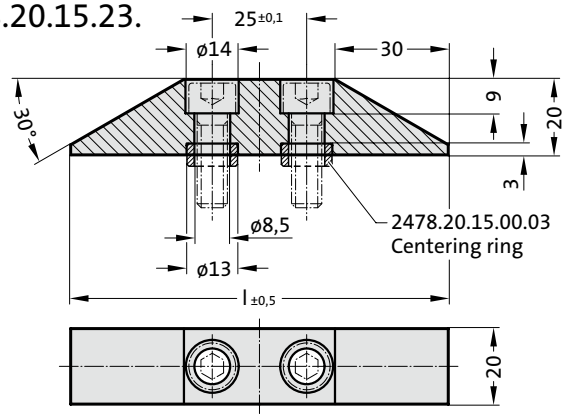

Material:

Steel

Note:

Delivery without screws and centring rings

Screws and centring rings are already included in the scope of delivery for the lifter units 2478.20.15.20./30./40.

2478.20.15.23. Lifter rail

Order No.	l
2478.20.15.23.2020.100	100
2478.20.15.23.2020.125	125
2478.20.15.23.2020.150	150
2478.20.15.23.2020.175	175
2478.20.15.23.2020.200	200
2478.20.15.23.2020.250	250
2478.20.15.23.2020.300	300
2478.20.15.23.2020.350	350
2478.20.15.23.2020.400	400
2478.20.15.23.2020.450	450
2478.20.15.23.2020.500	500
2478.20.15.23.2020.550	550
2478.20.15.23.2020.600	600



2478.20.15.24.

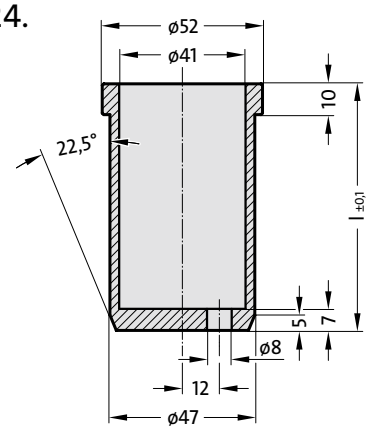

Material:

Steel

Note:

Holding sleeve 2478.20.15.24. can only be used for lifter 2478.20.15.20./30./40. ∅ 40 mm.

This is required when the panel is not thick enough.
(see installation example 2478.20.15.20./30./40.).

2478.20.15.24. Holding sleeve

Order No.	l
2478.20.15.24.04.030	30
2478.20.15.24.04.040	40
2478.20.15.24.04.050	50
2478.20.15.24.04.060	60
2478.20.15.24.04.070	70
2478.20.15.24.04.080	80
2478.20.15.24.04.090	90
2478.20.15.24.04.100	100
2478.20.15.24.04.110	110
2478.20.15.24.04.120	120
2478.20.15.24.04.130	130
2478.20.15.24.04.140	140
2478.20.15.24.04.150	150
2478.20.15.24.04.160	160
2478.20.15.24.04.170	170
2478.20.15.24.04.180	180
2478.20.15.24.04.190	190
2478.20.15.24.04.200	200

Universal lifter unit according to BMW standard

2478.20.15.30.

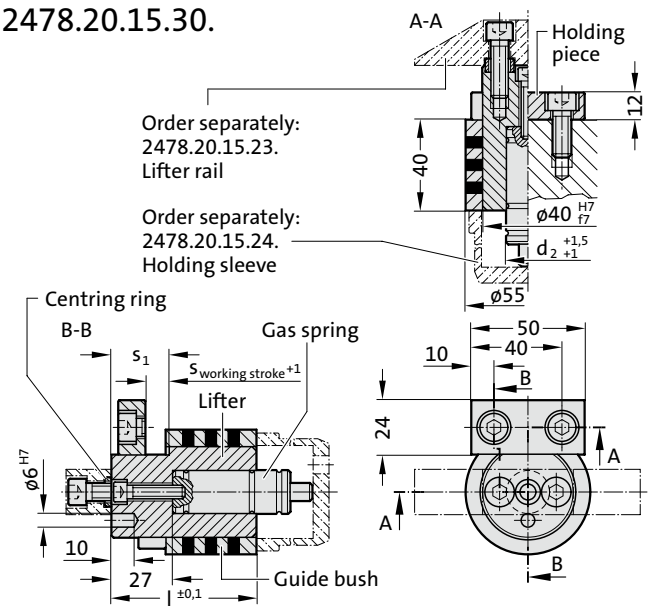



Material:

Steel

Design:

Universal lifter unit comprises

- Lifter
- Screw clamp
- Centring rings
- Guide bush
- Gas spring 2482.74.00090. or 2480.21.00200.
- Socket cap screw according to ISO 4762
  M6 × 25 (1x), M8 × 20 (2x), M8 × 25 (2x)

Note:

Order separately (see installation example)

- 2478.20.15.23.: Lifter rail
- 2478.20.15.24.: Quill bush

Installation example

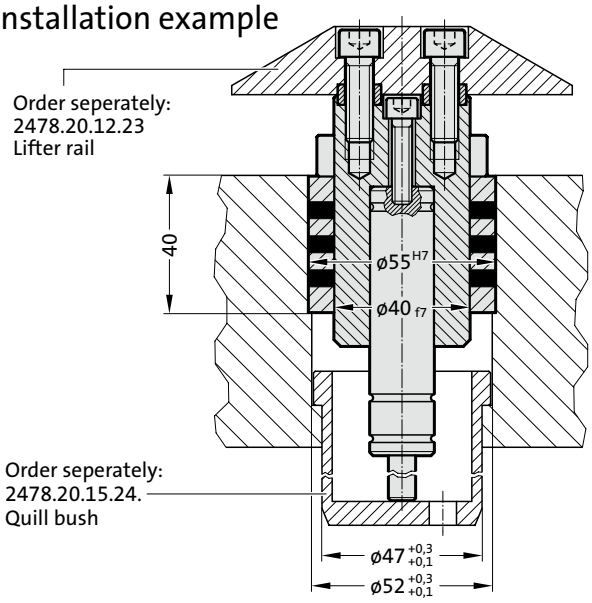

2478.20.15.30. Universal lifter unit according to BMW standard

			d_2 = ∅ 19		d_2 = ∅ 25	
l	$s_{working\ stroke}$	s_1	Gas spring	Order No.	Gas spring	Order No.
64	9	25	2482.74.00090.010.2	2478.20.15.30.14.009	2480.21.00200.010	2478.20.15.30.24.009
68.5	13.5	29.5	2482.74.00090.015.2	2478.20.15.30.14.014	2480.21.00200.015	2478.20.15.30.24.014
77.5	22.5	38.5	2482.74.00090.025.2	2478.20.15.30.14.023	2480.21.00200.025	2478.20.15.30.24.023
89	34	50	2482.74.00090.038.2	2478.20.15.30.14.034	2480.21.00200.038	2478.20.15.30.24.034
100	45	61	2482.74.00090.050.2	2478.20.15.30.14.045	2480.21.00200.050	2478.20.15.30.24.045
113.5	58.5	74.5	2482.74.00090.063.2	2478.20.15.30.14.059	2480.21.00200.063	2478.20.15.30.24.059
130	75	91	2482.74.00090.080.2	2478.20.15.30.14.075	2480.21.00200.080	2478.20.15.30.24.075
150	95	111	2482.74.00090.100.2	2478.20.15.30.14.095	2480.21.00200.100	2478.20.15.30.24.095
175	120	136	2482.74.00090.125.2	2478.20.15.30.14.120	2480.21.00200.125	2478.20.15.30.24.120

FIBRO

Universal lifter unit, according to BMW standard



2478.20.15.40.

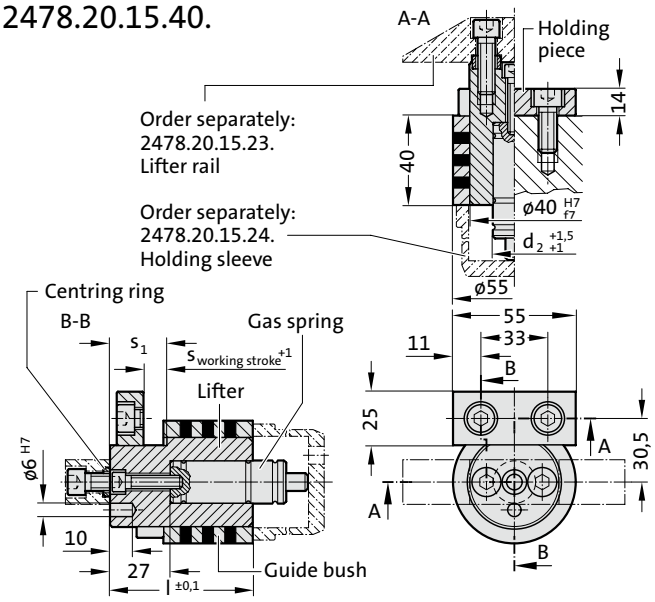

Mounting example

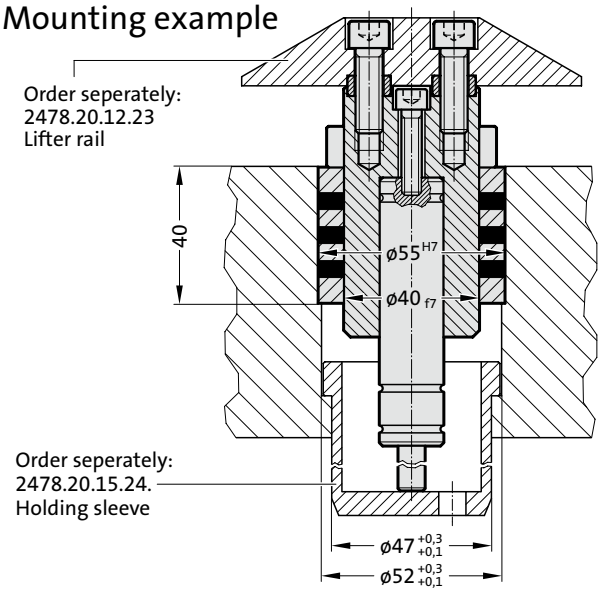

Material:

Steel

Execution:

Universal lifter unit comprises:

- Lifter
- Screw clamp
- Centring rings
- Guide bush
- Gas spring 2482.74.00090. or 2480.21.00200.
- Socket cap screw according to ISO 4762
  M6×25 (1x), M8×25 (2x), M10×20 (2x)

Note:

Order separately (see installation example)

- 2478.20.15.23.: Lifter rail
- 2478.20.15.24.: Holding sleeve

2478.20.15.40. Universal lifter unit, according to BMW standard

Order No	d_2	l	$s_{working\ stroke}$	s_1	Gas spring	Order No	d_2	l	$s_{working\ stroke}$	s_1	Gas spring
2478.20.15.40.14.009	19	64	9	25	2482.74.00090.010.2	2478.20.15.40.24.009	25	64	9	25	2480.21.00200.010
2478.20.15.40.14.014	19	68.5	13.5	29.5	2482.74.00090.015.2	2478.20.15.40.24.014	25	68.5	13.5	29.5	2480.21.00200.015
2478.20.15.40.14.023	19	77.5	22.5	38.5	2482.74.00090.025.2	2478.20.15.40.24.023	25	77.5	22.5	38.5	2480.21.00200.025
2478.20.15.40.14.034	19	89	34	50	2482.74.00090.038.2	2478.20.15.40.24.034	25	89	34	50	2480.21.00200.038
2478.20.15.40.14.040	19	100	40	56	2482.74.00090.050.2	2478.20.15.40.24.040	25	100	40	56	2480.21.00200.050
2478.20.15.40.14.045	19	100	45	61	2482.74.00090.050.2	2478.20.15.40.24.045	25	100	45	61	2480.21.00200.050
2478.20.15.40.14.050	19	113.5	50	66	2482.74.00090.063.2	2478.20.15.40.24.050	25	113.5	50	66	2480.21.00200.063
2478.20.15.40.14.054	19	113.5	54	70	2482.74.00090.063.2	2478.20.15.40.24.054	25	113.5	54	70	2480.21.00200.063
2478.20.15.40.14.059	19	113.5	58.5	74.5	2482.74.00090.063.2	2478.20.15.40.24.059	25	113.5	58.5	74.5	2480.21.00200.063
2478.20.15.40.14.065	19	130	65	81	2482.74.00090.080.2	2478.20.15.40.24.065	25	130	65	81	2480.21.00200.080
2478.20.15.40.14.070	19	130	70	86	2482.74.00090.080.2	2478.20.15.40.24.070	25	130	70	86	2480.21.00200.080
2478.20.15.40.14.075	19	130	75	91	2482.74.00090.080.2	2478.20.15.40.24.075	25	130	75	91	2480.21.00200.080
2478.20.15.40.14.080	19	150	80	96	2482.74.00090.100.2	2478.20.15.40.24.080	25	150	80	96	2480.21.00200.100
2478.20.15.40.14.085	19	150	85	101	2482.74.00090.100.2	2478.20.15.40.24.085	25	150	85	101	2480.21.00200.100
2478.20.15.40.14.090	19	150	90	106	2482.74.00090.100.2	2478.20.15.40.24.090	25	150	90	106	2480.21.00200.100
2478.20.15.40.14.095	19	150	95	111	2482.74.00090.100.2	2478.20.15.40.24.095	25	150	95	111	2480.21.00200.100
2478.20.15.40.14.100	19	175	100	116	2482.74.00090.125.2	2478.20.15.40.24.100	25	175	100	116	2480.21.00200.125
2478.20.15.40.14.105	19	175	105	121	2482.74.00090.125.2	2478.20.15.40.24.105	25	175	105	121	2480.21.00200.125
2478.20.15.40.14.110	19	175	110	126	2482.74.00090.125.2	2478.20.15.40.24.110	25	175	110	126	2480.21.00200.125
2478.20.15.40.14.115	19	175	115	131	2482.74.00090.125.2	2478.20.15.40.24.115	25	175	115	131	2480.21.00200.125
2478.20.15.40.14.120	19	175	120	136	2482.74.00090.125.2	2478.20.15.40.24.120	25	175	120	136	2480.21.00200.125

Spring ram with gas spring



Mounting example

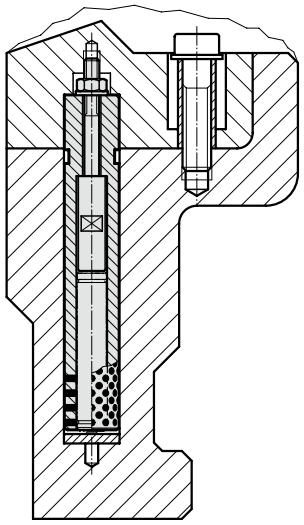

2478.

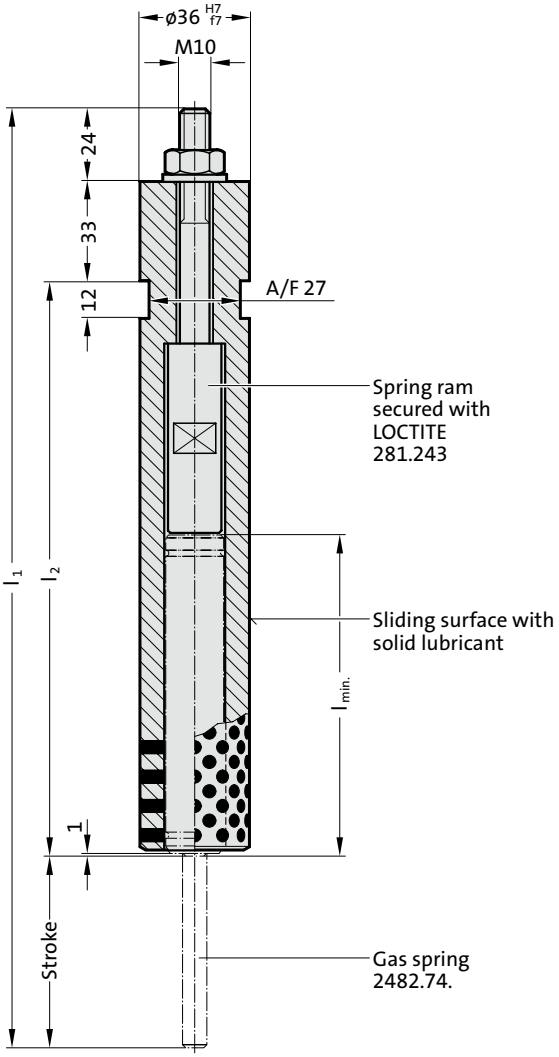

Material:

C45
induction hardened 58+4 HRC
Hardness penetration depth 0,8+0,4

Sliding surface with non-liquid lubricant

2478. Spring ram with gas spring

Order No	$Stroke_{max.}$	$l_{min.}$	l_1	l_2	Spring force [daN] initial	Spring force [daN] final	Gas spring
2478.050.00030.1	50	92	257	150	30	40	2482.74.00030.050
2478.050.00050.1	50	92	257	150	50	67	2482.74.00050.050
2478.050.00070.1	50	92	257	150	70	94	2482.74.00070.050
2478.050.00090.1	50	92	257	150	90	120	2482.74.00090.050
2478.063.00030.1	63	109	310	190	30	40	2482.74.00030.063.1
2478.063.00050.1	63	109	310	190	50	67	2482.74.00050.063.1
2478.063.00070.1	63	109	310	190	70	94	2482.74.00070.063.1
2478.063.00090.1	63	109	310	190	90	120	2482.74.00090.063.1
2478.080.00030.1	80	125	360	223	30	40	2482.74.00030.080.1
2478.080.00050.1	80	125	360	223	50	67	2482.74.00050.080.1
2478.080.00070.1	80	125	360	223	70	94	2482.74.00070.080.1
2478.080.00090.1	80	125	360	223	90	120	2482.74.00090.080.1

subject to alterations

Spring ram with gas spring to VW standard

2478.20. .1

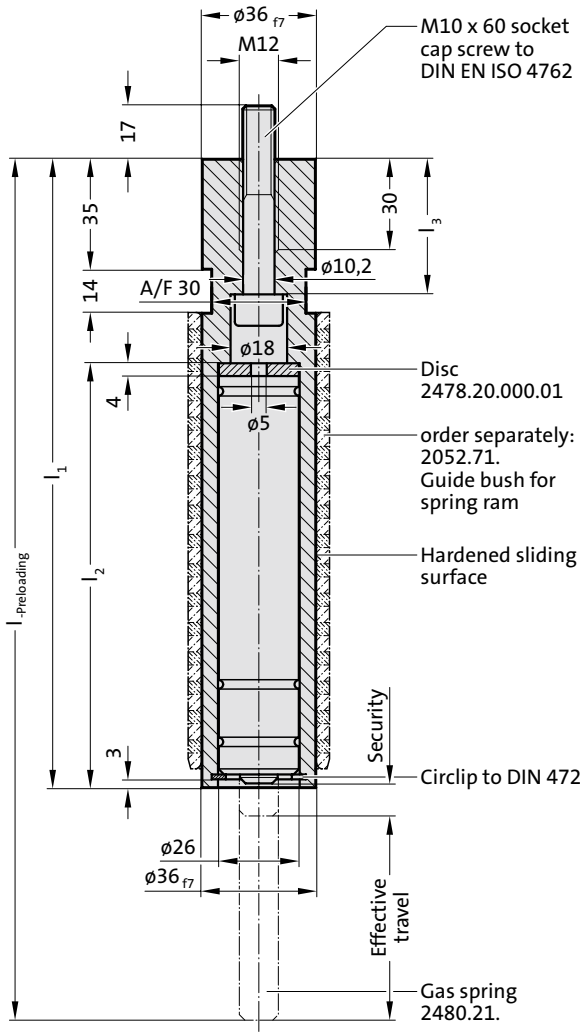

Mounting example

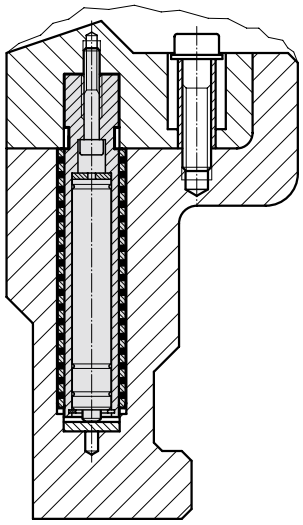



Material:

Spring ram: C45
induction hardened 58+4 HRCHardness penetration depth 0,8+0,4

Disc: 90MnCrV8
hardened 56+4 HRC

Note:

Use only with matching guide bush 2052.71.!

Spring bolt installed preloaded.

2478.20. .1 Spring ram with gas spring to VW standard

Order No	Stroke$_{max.}$	l	l_1	l_2	l_3	Spring force [daN] initial	Spring force [daN] final	Gas spring
2478.20.050.00050.1	50	240	182	118	42.5	50	68	2480.21.00050.063
2478.20.050.00100.1	50	240	182	118	42.5	100	137	2480.21.00100.063
2478.20.050.00150.1	50	240	182	118	42.5	150	206	2480.21.00150.063
2478.20.050.00200.1	50	240	182	118	42.5	200	275	2480.21.00200.063
2478.20.065.00050.1	65	274	200	135	43.5	50	68	2480.21.00050.080
2478.20.065.00100.1	65	274	200	135	43.5	100	137	2480.21.00100.080
2478.20.065.00150.1	65	274	200	135	43.5	150	206	2480.21.00150.080
2478.20.065.00200.1	65	274	200	135	43.5	200	275	2480.21.00200.080
2478.20.080.00050.1	80	314	220	155	43.5	50	68	2480.21.00050.100
2478.20.080.00100.1	80	314	220	155	43.5	100	137	2480.21.00100.100
2478.20.080.00150.1	80	314	220	155	43.5	150	206	2480.21.00150.100
2478.20.080.00200.1	80	314	220	155	43.5	200	275	2480.21.00200.100

Guide bush for spring ram 2478.20. .1



2052.71.

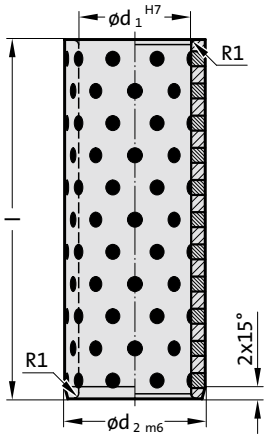

Material:
Bronze with solid lubricant, oilless lubricating.

Note:
Recommended locating bore for bonding G7.

2052.71. Guide bush for spring ram 2478.20. .1

Order No	d_1	d_2	l
2052.71.036.045.115	36	45	115
2052.71.036.045.145	36	45	145
2052.71.036.045.170	36	45	170

subject to alterations



Nitrogen Gas springs

Gas spring
Two-Chamber system

APPROVED PED 97/23/EC

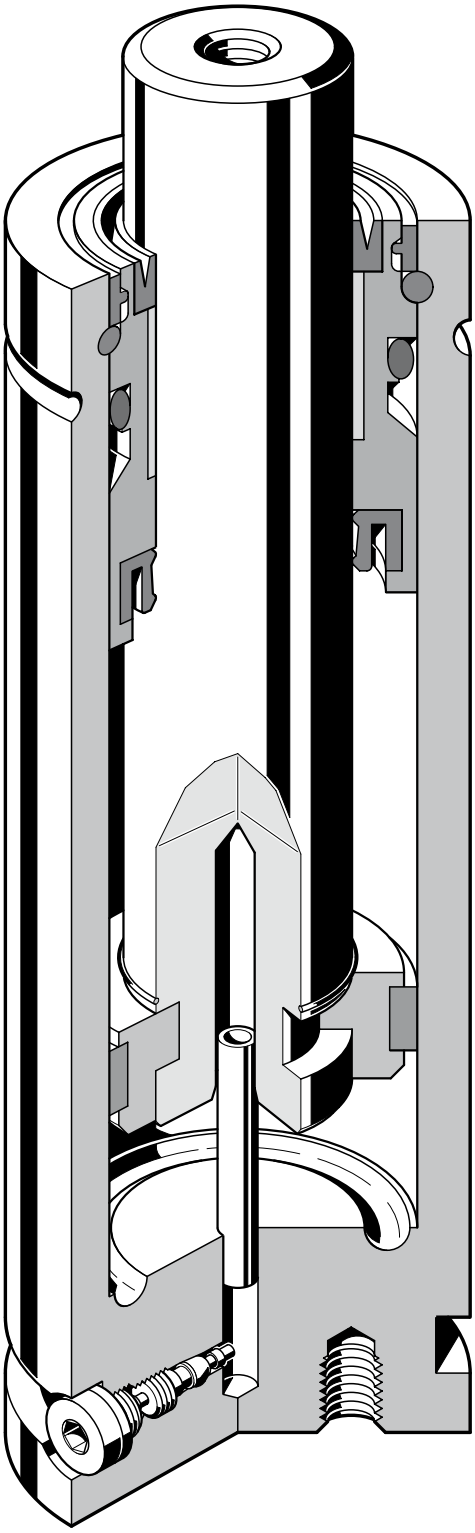

2480.12.

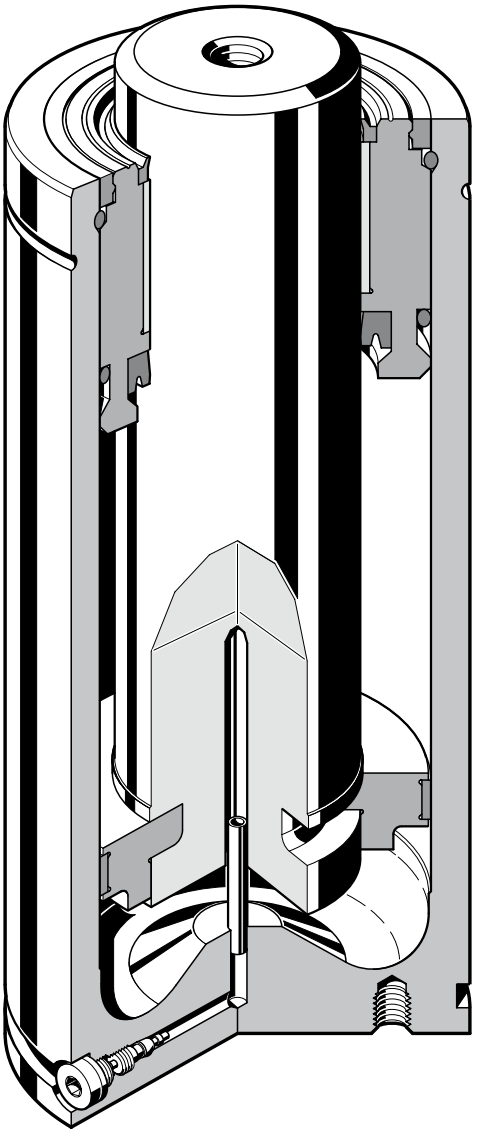

2480.13.

Compact-Gas spring
Single-Chamber system

2490.

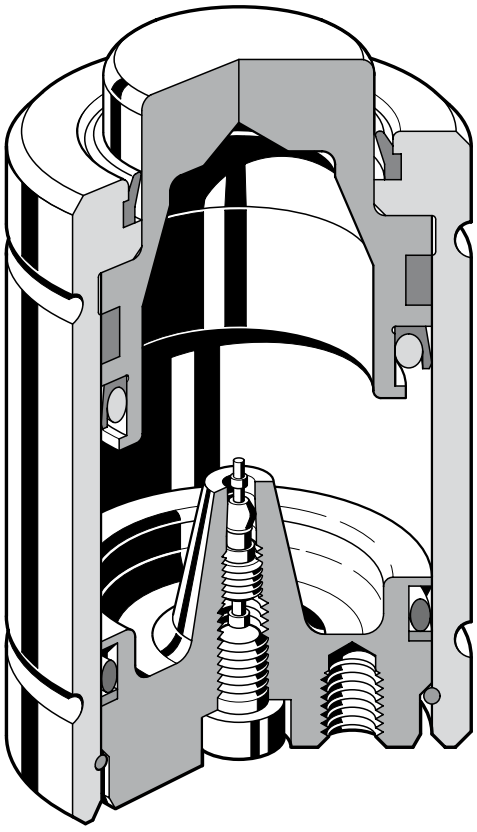

Gas springs

FIBRO Gas springs

The extensive range of FIBRO Gas springs constitutes an ideal supplement to and expansion of the traditional programmes of spring elements such als helical springs, disc springs and elastomer units. With their minimal space requirement, Gas springs close a gap where ever the accent is on accomodation of the utmot force component within a minimum of space – or where exceedingly large travel is demanded: FIBRO Gas springs take care of both demands, even in combination.

Their self-contained nitrogen charge makes FIBRO Gas springs completely autonomous devices. Feeder pipes or storage vessel are not required.

Monitoring of charge pressure, however, is necessary in certain special cases. Suitable equipment for in-situ pressure control can be found in the Accessories Section.

As long as all mounting detail is laid out with due circumspection, removal and installation of the units presents no problems whatsoever.

Instructions are included with every delivery of Gas springs.

Application examples see at the end of chapter F.

Functioning

The pressure medium is a commercially available, environment-friendly nitrogen. FIBRO Gas springs have a standard charge pressure of max. 150 bar (180 bar). Depending on spring size and type, this pressure offers initial force ratings of 2 daN to 20,000 daN.

Pressure Build-Up

In operation the piston rod enters the spring space whose volume is progressively reduced. The resulting pressure rise can be plotted on the Gas Spring Diagram as a multiplication factor. The spring force is the product of initial force times that pressure-rise factor and can therefore be calculated easily.

Working temperature

The spring temperature should not exceed +80 °C.

Charge pressure

Modification of charge pressure allows variation of the force rating and can be predetermined from the spring Diagram.

Installation

FIBRO Gas springs can be used in any installation position. Whether or not external forces act on them when at rest is of no consequence.

All FIBRO Gas springs meet the requirements of the Pressure Equipment Directive 97/23/EC.

The Pressure Equipment Directive (97/23/EC) has been ratified by the European Parliament and the Council of Europe. The requirements of the Pressure Equipment Directive came into force throughout the EC on 29 May 2002.

The directive defines pressure equipment as vessels, pipework, safety devices and pressure accessories. In terms of the Directive a vessel is a casing which is designed and manufactured to contain fluids under pressure.

It follows from this definition that nitrogen Gas springs of all sizes are deemed to be pressure vessels and must in this respect comply with the Pressure Equipment Directive (97/23/EC) from 29 May 2002.

Gas springs

Maintenance

FIBRO Gas springs were disigned for maintenancefree continual operation. It is recommended to oil the piston rod lightly from time to time.

Guide- and sealing elements can be exchanged easily and expediciously. They are available as a kit. Each kit comes with detailed instructions for maintenance of FIBRO Gas springs.

Attention

When safety functions are triggered (overstroke, return stroke, or overpressure protection), the gas pressure springs can no longer be repaired!

Warning

FIBRO Gas springs may be charged only with commercial Grade 5.0 nitrogen gas.

Accessories

The accessories range for Gas springs comprises fastening devices, charge- and control units, screw connections for these, and connecting lines for compound installations.

Warning signs

These are available on request. The signs should be affixed near the springs in as prominent a position as possible.

WARNING
This tool is equipped with
__ Gas Springs with a max. pressure of
150 or 180 bar, depending on spring type.
Working pressure _____ bar.
Read maintenance instructions before working on gas springs.

FIBRO

Business Area Standard Parts
D-74851 Hassmersheim · Postfach 1120
T +49 (0) 6266-73-0* · **F** +49 (0) 6266-73-237

Size 35x50 mm

Language	Order No
german	2480.00.035.050.1
english	2480.00.035.050.2
french	2480.00.035.050.3
italian	2480.00.035.050.4
spanish	2480.00.035.050.5
polish	2480.00.035.050.PL
czech	2480.00.035.050.CZ
turkish	2480.00.035.050.TR
chinese	2480.00.035.050.CN

WARNING
This tool is equipped with ___ Gas Springs with a max. pressure of 150 or 180 bar, depending on spring type.

No. pcs.		spring type	fill.press./bar	force/daN
1	____	_____	_____	_____
2	____	_____	_____	_____
3	____	_____	_____	_____
4	____	_____	_____	_____
5	____	_____	_____	_____

Read maintenance instructions **before** working on gas springs.

FIBRO

Business Area Standard Parts
D-74851 Hassmersheim · Postfach 1120
T +49 (0) 6266-73-0* · **F** +49 (0) 6266-73-237

Size 75x105 mm

Language	Order No
german	2480.00.075.105.1
english	2480.00.075.105.2
french	2480.00.075.105.3
italian	2480.00.075.105.4
spanish	2480.00.075.105.5
polish	2480.00.075.105.PL
czech	2480.00.075.105.CZ
turkish	2480.00.075.105.TR
chinese	2480.00.075.105.CN

Size 110x150 mm

Language	Order No
german	2480.00.110.150.1
english	2480.00.110.150.2
french	2480.00.110.150.3
italian	2480.00.110.150.4
spanish	2480.00.110.150.5
polish	2480.00.110.150.PL
czech	2480.00.110.150.CZ
turkish	2480.00.110.150.TR
chinese	2480.00.110.150.CN

Mounting directions for gas springs

Mounting examples

Below are the various gas spring mounting possibilities, which differ from model to model.

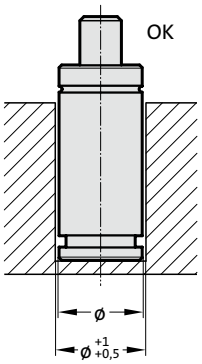

Installed loos in the bore.

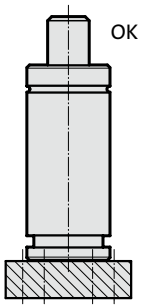

Screw mounted at tha base with 2480.011.

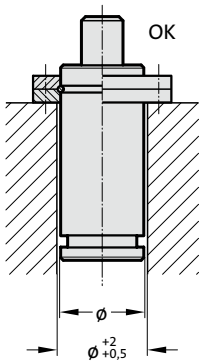

Fixed with 2480.055./057./058./064.

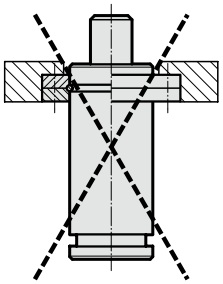

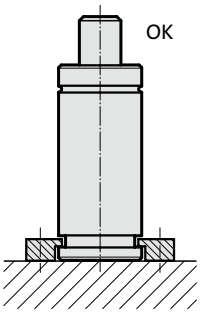

Fixed with 2480.007./008.

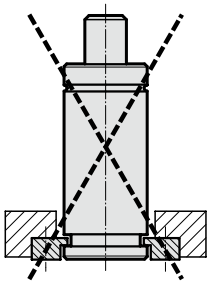

Fixed with 2480.007./008.

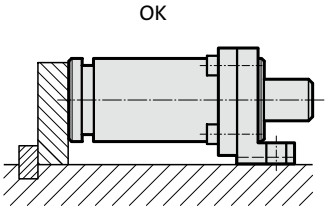

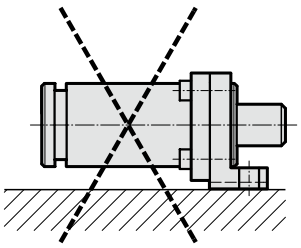

Fixed with 2480.044./045./047.

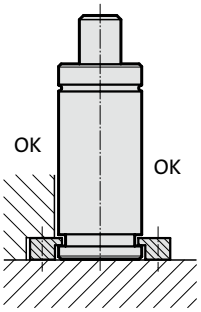

Fixed with 2480.022.

Mounting directions for gas springs

To achieve the best possible service-life and safety from the gas spring, the directions below must be followed.

Mounting instructions

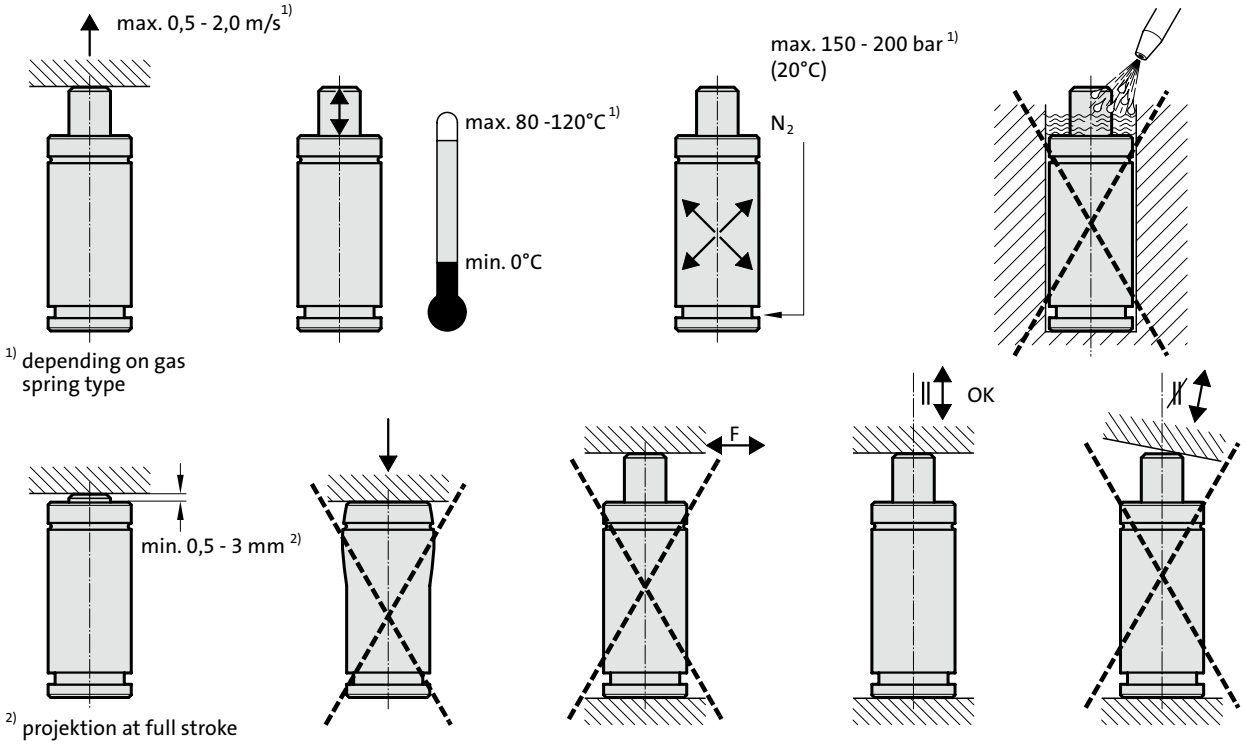

- Secure the gas spring to the tool/machine whenever possible, using the threaded hole(s) in the base of the gas spring or a suitable flange. Never exceed the maximum torque values for the threads in the base of the gas spring: (M6 = 10 Nm; M8 = 24 Nm; M10 = 45 Nm; M12 = 80 Nm)
- The threaded hole in the piston rod top should not be used for mounting purposes. It is only to be used when carrying and servicing the gas spring.
- Do not use the gas spring in such a way that the piston rod is realised freely from its compressed position, as this could cause internal damage to the gas spring.
- Make sure the gas spring is mounted parallel to the direction of the compression stroke.
- Ensure the contact surface of the piston rod top is perpendicular to the direction of the compression stroke and is sufficiently hardened.
- The gas spring should not be subjected to the side loads.
- Protect the piston rod against mechanical damage and contact with fluids.
- We do not recommend the last 5 mm or 10% of the nominal stroke be utilised.
- The maximum charging pressure (at 20°C) must not be exceeded as it may effect the safety of the product.
- Exceeding the gas spring's recommended operating temperature will shorten the service-life of the gas spring.
- The entire contact surface of the piston rod / piston should be used.
- Do not remove bottom 2480./2497.00.20. from spring until all gas pressure has been discharged.

FIBRO

Gas springs – The Safer Choice

PDF DOWNLOAD

FIBRO - The Safer Choice

At FIBRO, safety and reliability are paramount. Particularly when it comes to our gas springs. With their unique range of safety features, FIBRO gas springs are the safest on the market.

FIBRO safety features[1)]



PED approval for 2 million strokes

FIBRO gas springs are developed, manufactured and tested for 2 million full strokes* in accordance with DGRL97/23/EG. The springs deliver this full performance at the maximum permissible limits in terms of filling pressure and operating temperature - even when combined with any of the various mounting types available.

* Unless specified otherwise on the spring

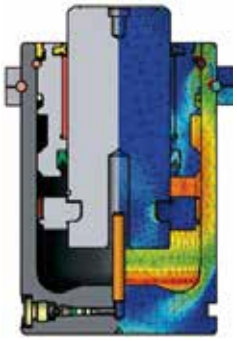

The benefit for you:

► **Guaranteed safety and reliability for the entire service life of the spring**

Repair kits and qualified training sessions available through FIBRO Service offer increased effectiveness and process reliability.

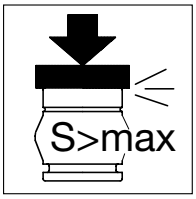

Overstroke protection

Conventional gas springs can burst in the event of an over-extended stroke. If this happens, parts flying around can become dangerous projectiles.

FIBRO gas springs are different: in the event of an overstroke and depending on the spring type the patented protection system will ensure that either the cylinder wall of the gas spring is deformed in a predefined manner (A) or the piston rod destroys a rupture bolt in the floor of the cylinder (B), thereby allowing the gas to escape into the atmosphere.

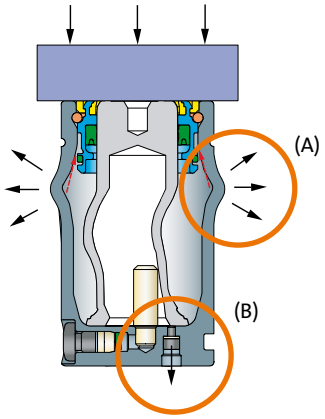

The benefit for you:

► **No risk of parts flying around in the event of an overstroke**

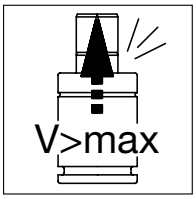

Return stroke protection

A particularly dangerous situation can arise with conventional gas springs if tool components become jammed and the pressure on the compressed piston rod is then abruptly released: in this case, the piston rod is then fired out of the cylinder like a missile.
FIBRO gas springs are different: special guides and a patented safety stop in the piston rods ensure your safety. If the speed is too high during the return stroke, the collar on the piston rod will automatically break. The integrated safety stop then destroys the seal, which allows the gas to escape into the atmosphere and the gas spring to become depressurised.

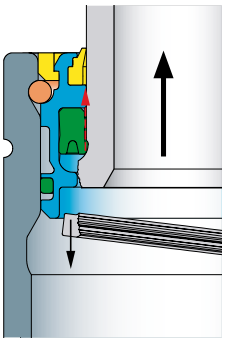

The benefit for you:

► **No risk of a piston rod firing out if the return stroke is too fast**

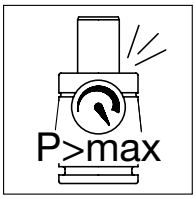

Overpressure protection

Conventional gas springs can burst if the internal pressure rises above a maximum permitted value. If this happens, parts flying around can become dangerous projectiles.

FIBRO gas springs are different: if the pressure rises above the maximum permitted value, the safety collar on the sealing set is automatically destroyed. The gas then escapes into the atmosphere and the gas spring is depressurised.

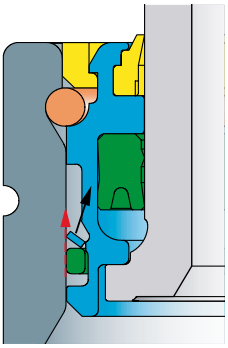

The benefit for you:

► **No risk of bursting parts in the event of overpressure**

[1)] Not all the safety features mentioned here have been implemented on all FIBRO gas springs.
Please refer to the relevant data sheets to check the current safety equipment which is provided with the gas spring you are interested in, or contact FIBRO GmbH directly for more information.

Gas springs – The Safer Choice

FIBRO reliability features



Flexible guides: The Flex Guide™ System

The Flex Guide™ System is a flexible guide in the gas spring which absorbs lateral movements of the piston rod. It minimises friction and lowers the operating temperature.

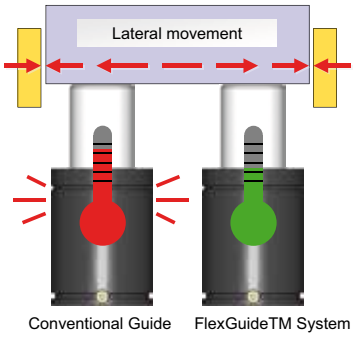

The benefits for you:

- **Extended service life**
- **Increased stroke frequency, i.e. more strokes per minute**

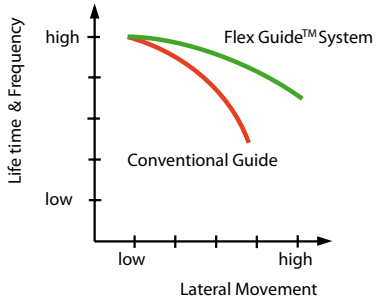

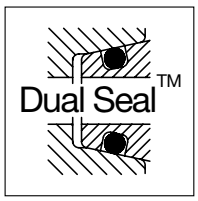

Safe hose connections: The Dual Seal™ System

The FIBRO Dual Seal™ System combines a metal seal with a soft elastomer seal. On hose connection systems, the system provides two leak-tight connections and prevents rotation.

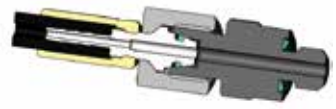

The benefits for you:

- **Leak-tight connection, even under vibrations**
- **High process reliability**
- **Minimised tool down time**
- **Simple installation thanks to anti-rotation function**



Wireless monitoring: The Wireless Pressure Monitoring (WPM) System

The optional Wireless Pressure Monitoring System (WPM) (patent pending) wirelessly monitors the pressure and temperature of FIBRO gas springs. Before a defective part is produced, the press operator receives a message from the WPM and can take appropriate action.

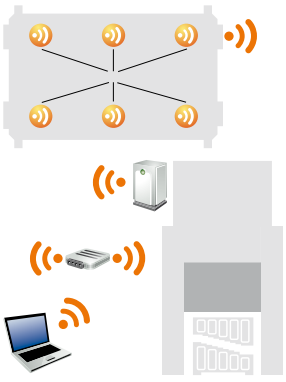

The benefits for you:

- **Preventative quality assurance**
- **High process reliability**
- **Minimised tool down time**
- **Reduced maintenance and costs**

Potential faults are individually displayed. As a result, service intervals can be extended.
Maintenance and repair costs are reduced.

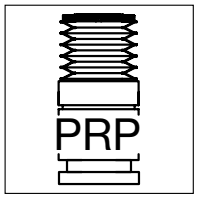

Protected piston rods: FIBRO Concertina Shrouds

The FIBRO Piston Rod Protection (patented) reliably protects the piston rods in gas springs against dirt, oil and emulsion. In this way, the system prevents damage to the piston rod surface and leaks at internal seals.

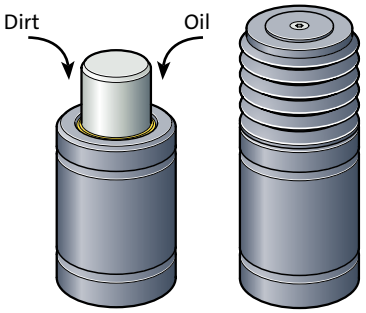

The benefits for you:

- **Significantly longer service life for gas springs under harsh operating conditions**

FIBRO

Gas springs
Synopsis

Gas springs, Ejector pin units

Nominal force in daN	Outside-∅ in mm	Stroke in mm	Built-in lenght in mm	Standard	Note	Order No
5	M16x1,5	10 - 125	65 - 295	VDI		2479.030.00005.
10	M16x1,5	10 - 125	65 - 295	VDI		2479.030.00010.
20	M16x1,5	10 - 125	65 - 295	VDI		2479.030.00020.
40	M16x1,5	10 - 125	65 - 295	VDI		2479.030.00040.
4	M16x2	10 - 125	65 - 295	VDI		2479.031.00004.
5	M16x2	10 - 125	65 - 295	VDI		2479.031.00005.
10	M16x2	10 - 125	65 - 295	VDI		2479.031.00010.
20	M16x2	10 - 125	65 - 295	VDI		2479.031.00020.
40	M16x2	10 - 125	65 - 295	VDI		2479.031.00040.
20	M24x1,5	10 - 125	65 - 295	VDI		2479.032.00020.
40	M24x1,5	10 - 125	65 - 295	VDI		2479.032.00040.
80	M24x1,5	10 - 125	65 - 295	VDI		2479.032.00080.
170	M24x1,5	10 - 125	65 - 295	VDI		2479.032.00170.
20	M24x1,5	10 - 125	65 - 295	WDX		2479.034.00020.
40	M24x1,5	10 - 125	65 - 295	WDX		2479.034.00040.
80	M24x1,5	10 - 125	65 - 295	WDX		2479.034.00080.
170	M24x1,5	10 - 125	65 - 295	WDX		2479.034.00170.

Gas springs, small dimensions

13	12	7 - 125	56 - 295			2482.72.00013.
25	12	7 - 125	56 - 295			2482.72.00025.
38	12	7 - 125	56 - 295			2482.72.00038.
50	12	7 - 125	56 - 295			2482.72.00050.
18	15	7 - 125	56 - 295			2482.73.00018.
35	15	7 - 125	56 - 295			2482.73.00035.
50	15	7 - 125	56 - 295			2482.73.00050.
70	15	7 - 125	56 - 295			2482.73.00070.
30	19	7 - 125	56 - 295	VDI, ISO		2482.74.00030.
50	19	7 - 125	56 - 295	VDI, ISO		2482.74.00050.
70	19	7 - 125	56 - 295	VDI, ISO		2482.74.00070.
90	19	7 - 125	56 - 295	VDI, ISO		2482.74.00090.
50	24,9	10 - 125	62 - 295	VDI, ISO		2480.21.00050.
100	24,9	10 - 125	62 - 295	VDI, ISO		2480.21.00100.
150	24,9	10 - 125	62 - 295	VDI, ISO		2480.21.00150.
200	24,9	10 - 125	62 - 295	VDI, ISO		2480.21.00200.
50	32	10 - 125	70 - 300	VDI, ISO		2480.22.00050.
100	32	10 - 125	70 - 300	VDI, ISO		2480.22.00100.
150	32	10 - 125	70 - 300	VDI, ISO		2480.22.00150.
200	32	10 - 125	70 - 300	VDI, ISO		2480.22.00200.
	24,9	10 - 125	62 - 295			2480.23.

Standard-Gas springs

250	38	10 - 125	70 - 300	VDI, ISO		2480.12.00250.
500	45,2	10 - 160	105 - 405	VDI, ISO		2480.12.00500.
750	50,2	13 - 300	120,4 - 695	VDI, ISO		2480.13.00750.
1500	75,2	13 - 300	135 - 710	VDI, ISO		2480.12.01500.
3000	95,2	13 - 300	145 - 720	VDI, ISO		2480.13.03000.
5000	120,2	25 - 300	190 - 740	VDI, ISO		2480.13.05000.
7500	150,2	25 - 300	205 - 755	VDI, ISO		2480.13.07500.
10000	195	25 - 300	210 - 760	VDI, ISO		2480.12.10000.

Standard-Gas springs – HEAVY DUTY

1000	50,2	13 - 300	121 - 695	VDI, ISO		2488.13.01000.
2400	75,2	25 - 300	160 - 710	VDI, ISO		2488.13.02400.
4200	95,2	25 - 300	170 - 720	VDI, ISO		2488.13.04200.
6600	120,2	25 - 300	190 - 740	VDI, ISO		2488.13.06600.
9500	150,2	25 - 300	205 - 755	VDI, ISO		2488.13.09500.

Gas springs with through bore passage

270	38	16 - 80	108 - 236			2496.12.00270.
490	50,2	16 - 80	112 - 240			2496.12.00490.
1060	75,2	16 - 100	122 - 290			2496.12.01060.

subject to alterations

Gas springs
Synopsis

Nominal force in daN	Outside-∅ in mm	Stroke in mm	Built-in lenght in mm	Standard	Note	Order No
Gas springs with increased spring force – POWER LINE						
170	19	7 - 125	44 - 285	VDI, ISO		2487.12.00170.
320	24,9	7 - 125	44 - 285	ISO		2487.12.00320.
350	32	10 - 125	50 - 280	VDI, ISO		2487.12.00350.
500	38	10 - 125	50 - 280	VDI, ISO		2487.12.00500.
750	45,2	10 - 125	52 - 282	VDI, ISO		2487.12.00750.
1000	50,2	13 - 125	64 - 288	VDI, ISO		2487.12.01000.
1500	63,2	13 - 125	70 - 294	VDI, ISO		2487.12.01500.
2400	75,2	16 - 125	77 - 295	VDI, ISO		2487.12.02400.
4200	95,2	16 - 125	90 - 308	VDI, ISO		2487.12.04200.
6600	120,2	16 - 125	100 - 318	VDI, ISO		2487.12.06600.
9500	150,2	19 - 125	116 - 328	VDI, ISO		2487.12.09500.
20000	195	19 - 125	148 - 360			2487.12.20000.
Compact-Gas springs						
420	24,9	6 - 50	56 - 195			2490.14.00420.
750	32	6 - 50	63 - 195			2490.14.00750.
1000	38	6 - 50	61 - 230			2490.14.01000.
1800	50,2	6 - 65	66 - 271			2490.14.01800.
3000	63,2	10 - 65	85 - 256			2490.14.03000.
4700	75,2	10 - 65	80 - 273			2490.14.04700.
7500	95,2	10 - 65	90 - 279			2490.14.07500.
11800	120,2	10 - 65	100 - 320			2490.14.11800.
18300	150,2	10 - 65	110 - 323			2490.14.18300.
Gas springs low build height						
500	45,2	6 - 125	62 - 300			2485.12.00500.
750	50,2	6 - 125	62 - 300			2485.12.00750.
1500	75,2	25 - 100	110 - 260			2485.12.01500.
»Speed Control ™«, Gas springs, SPC, cushioned						
750	75,2	125 - 300	360 -710			2486.12.00750.
1500	95,2	125 - 300	370 -720			2486.12.01500.
3000	120,2	125 - 300	390 -740			2486.12.03000.
5000	150,2	125 - 300	405 -755			2486.12.05000.
Gas springs, DS, for Die Separation						
3000	95,2	80 - 300	280 - 720			2486.22.03000.
5000	120,2	80 - 300	300 - 740			2486.22.05000.
7500	150,2	80 - 300	315 - 755			2486.22.07500.
Gas springs to WDX standard/Request your catalogue						
Gas springs, threaded						
50 - 200	M28×1,5	10 - 125	62 - 292		external thread	2480.32.00050.-00200.
250	M38×1,5	13 - 100	75,4 - 250		external thread	2480.32.00250.
250	38	13 - 100	75,4 - 250		with male fixing thread	2480.82.00250.
1000	50,2	13 - 125	64 - 288		with male fixing thread	2487.82.01000.
15	M28×1,5	125	292		with hexagonal flange	2480.33.00015.125
50	M28×1,5	125	292		with hexagonal flange	2480.33.00050.125
100	M28×1,5	125	292		with hexagonal flange	2480.33.00100.125
150	M28×1,5	125	292		with hexagonal flange	2480.33.00150.125
200	M28×1,5	125	292		with hexagonal flange	2480.33.00200.125
Gas springs for working temperatures up to 120°C						
LCF Gas springs, damped						
750	50,2	13 - 300	120,4 - 695			2484.13.00750.
1500	75,2	25 - 300	160 - 710			2484.12.01500.
3000	95,2	25 - 300	170 - 720			2484.13.03000.
5000	120,2	25 - 300	190 - 740			2484.13.05000.
7500	150,2	25 - 300	205 - 755			2484.13.07500.
Controllable Gas springs/Request your catalogue						2489.
Air Springs, to VW standard/Request your catalogue						2491.
Manifold system/Request your catalogue						2495.



Gas springs (Spring plungers)

FIBRO

Gas spring (Spring plunger), with hexagon socket, VDI 3004



2479.030.

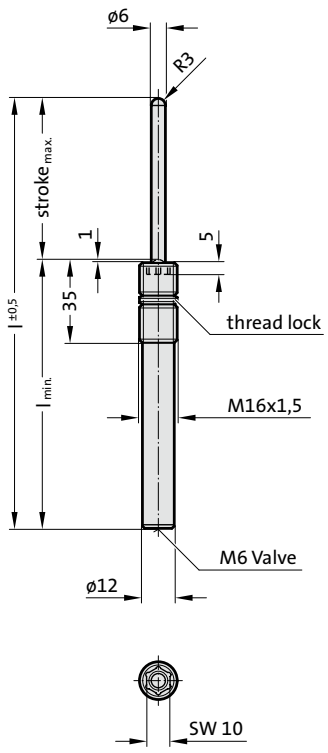

Description:

Spring plungers are used as ejectors, damper pins, fixing and retaining pins in many sectors of the tool-, jig- and fixture-making industries. Assembly requires the use of special FIBRO insertion tool (2470.12.010.017).

Note:

Worn gas springs cannot be repaired, they have to be replaced completely.

Pressure medium: Nitrogen - N_2
Max. filling pressure: 150 bar
Min. filling pressure: 6 bar
Working temperature: 0°C to +80°C
Temperature related force increase: ± 0,3%/°C
Max. recommended extensions per minute: approx. 100 (at 20°C)
Max. piston speed: 1,6 m/s

Upon customers request, also available unfilled, Order No 2479.030.00000...., Colour: black

2) Hexagon nut order supplementary: 2480.004.00040.1 (M16 x 1,5)

2479.030. Gas spring (Spring plunger), with hexagon socket, VDI 3004

Spring type:				.00005.		.00010.		.00020.		.00040.	
Order No*	Stroke max.	l	l min.	F initial	F final	F initial	F final	F initial	F final	F initial	F final
2479.030.□□□□□.010	10	65	55	6	10.3	11	19	21	36.1	42	73
2479.030.□□□□□.020	20	85	65	6	9.4	11	17.2	21	32.8	42	66.1
2479.030.□□□□□.030	30	105	75	6	9.1	11	16.7	21	31.9	42	64.5
2479.030.□□□□□.040	40	125	85	6	9	11	16.5	21	31.5	42	63.7
2479.030.□□□□□.050	50	145	95	6	9.6	11	17.6	21	33.6	42	67.7
2479.030.□□□□□.060	60	165	105	6	9.4	11	17.3	21	33	42	66.5
2479.030.□□□□□.070	70	185	115	6	9.3	11	17	21	32.5	42	65.7
2479.030.□□□□□.080	80	205	125	6	9.2	11	16.8	21	32.1	42	65.1
2479.030.□□□□□.100	100	245	145	6	9.1	11	16	21	31.9	42	64.3
2479.030.□□□□□.125	125	295	170	6	9	11	16.5	21	31.5	42	63.8

*complete with spring type

Spring force marking:
Spring type - Pressure [bar] - Colour:
.00005. - 20 - green
.00010. - 40 - blue
.00020. - 75 - red
.00040. - 150 - yellow



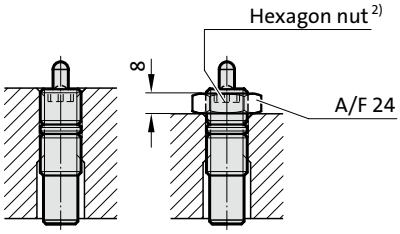

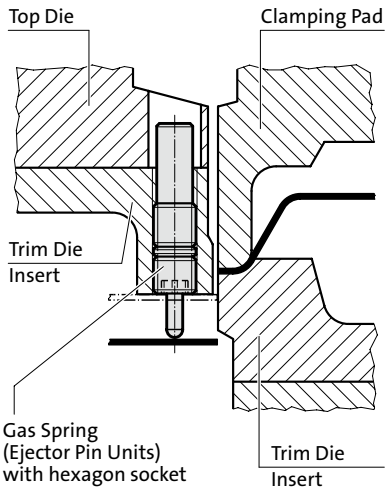

Gas spring (Spring plunger), with hexagon socket, VDI 3004

Description:

Spring plungers are used as ejectors, damper pins, fixing and retaining pins in many sectors of the tool-, jig- and fixture-making industries. Assembly requires the use of special FIBRO insertion tool (2470.12.010.017).

Note:

Worn gas springs cannot be repaired, they have to be replaced completely.

Pressure medium: Nitrogen - N_2
Max. filling pressure: 150 bar
Min. filling pressure: 6 bar
Working temperature: 0°C to +80°C
Temperature related force increase: ± 0,3%/°C
Max. recommended extensions per minute: approx. 100 (at 20°C)
Max. piston speed: 1,6 m/s

Upon customers request, also available unfilled, Order No 2479.031.00000...., Colour: black

2) Hexagon nut order supplementary: 2480.004.00040.2 (M16 x 2)

2479.031.

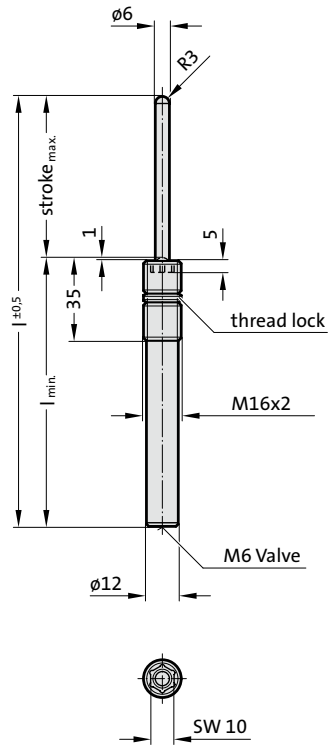



APPROVED PED 97/23/EC | VDI | V>max | P>max

2479.031. Gas spring (Spring plunger), with hexagon socket, VDI 3004

Spring type:				.00004.		.00005.		.00010.		.00020.		.00040.	
Order No*	$Stroke_{max.}$	l	$l_{min.}$	$F_{initial}$	F_{final}	$F_{initial}$	F_{final}	$F_{initial}$	F_{final}	$F_{initial}$	F_{final}	$F_{initial}$	F_{final}
2479.031.□□□□□.010	10	65	55	3.4	6	6	10.3	11	19	21	36.1	42	73
2479.031.□□□□□.020	20	85	65	3.4	5.2	6	9.4	11	17.2	21	32.8	42	66.1
2479.031.□□□□□.030	30	105	75	3.4	5.2	6	9.1	11	16.7	21	31.9	42	64.5
2479.031.□□□□□.040	40	125	85	3.4	5.2	6	9	11	16.5	21	31.5	42	63.7
2479.031.□□□□□.050	50	145	95	3.4	5.4	6	9.6	11	17.6	21	33.6	42	67.7
2479.031.□□□□□.060	60	165	105	3.4	5.4	6	9.4	11	17.3	21	33	42	66.5
2479.031.□□□□□.070	70	185	115	3.4	5.4	6	9.3	11	17	21	32.5	42	65.7
2479.031.□□□□□.080	80	205	125	3.4	5.2	6	9.2	11	16.8	21	32.1	42	65.1
2479.031.□□□□□.100	100	245	145	3.4	5.2	6	9.1	11	16	21	31.9	42	64.3
2479.031.□□□□□.125	125	295	170	3.4	5.2	6	9	11	16.5	21	31.5	42	63.8

*complete with spring type

Spring force marking:
Spring type - Pressure [bar] - Colour:
.00004. - 12 - violet
.00005. - 20 - green
.00010. - 40 - blue
.00020. - 75 - red
.00040. - 150 - yellow



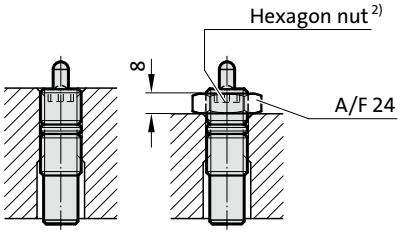

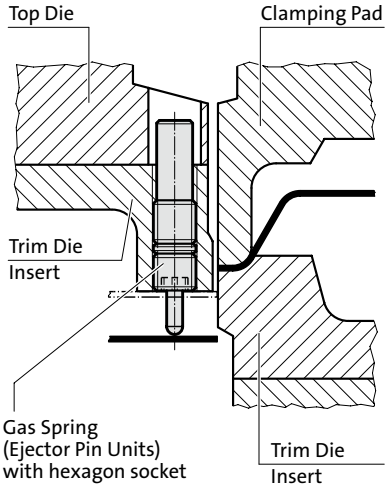

Gas spring (Spring plunger), with hexagon socket, VDI 3004



2479.032.

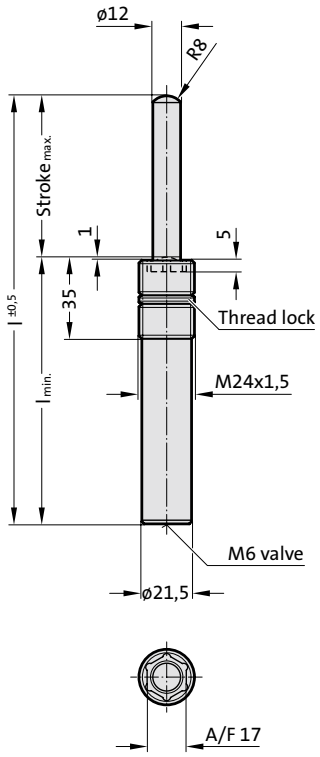

Description:

Spring plungers are used as ejectors, damper pins, fixing and retaining pins in many sectors of the tool-, jig- and fixture-making industries. Assembly requires the use of special FIBRO insertion tool (2470.12.010.017)

Note:

Worn Gas springs cannot be repaired, they have to be replaced completely.

Pressure medium: Nitrogen - N_2
Max. filling pressure: 150 bar
Min. filling pressure: 20 bar
Working temperature: 0°C to +80°C
Temperature related force increase: ± 0,3%/°C
Max. recommended extensions per minute: approx. 100 (at 20°C)
Max. piston speed: 1,6 m/s

Upon customers request, also available unfilled, Order No 2479.032.00000...., Colour: black

2) Hexagon nut order supplementary: 2480.004.00170

2479.032. Gas spring (Spring plunger), with hexagon socket, VDI 3004

Spring type:				.00020.		.00040.		.00080.		.00170.	
Order No*	$Stroke_{max.}$	l	$l_{min.}$	$F_{initial}$	F_{final}	$F_{initial}$	F_{final}	$F_{initial}$	F_{final}	$F_{initial}$	F_{final}
2479.032.□□□□□.010	10	65	55	23	33.1	45	64.8	85	122.4	170	244.8
2479.032.□□□□□.020	20	85	65	23	36.3	45	71.1	85	134.3	170	258.6
2479.032.□□□□□.030	30	105	75	23	38.2	45	74.7	85	141.1	170	282.2
2479.032.□□□□□.040	40	125	85	23	39.3	45	76.9	85	145.4	170	290.7
2479.032.□□□□□.050	50	145	95	23	42.5	45	83.2	85	157.3	170	314.5
2479.032.□□□□□.060	60	165	105	23	42.5	45	83.2	85	157.3	170	314.5
2479.032.□□□□□.070	70	185	115	23	42.8	45	83.7	85	158.1	170	316.2
2479.032.□□□□□.080	80	205	125	23	42.8	45	83.7	85	158.1	170	316.2
2479.032.□□□□□.100	100	245	145	23	43	45	84.1	85	159	170	318
2479.032.□□□□□.125	125	295	170	23	43	45	84.1	85	159	170	318

*complete with spring type

Spring force marking:
Spring type - Pressure [bar] - Colour:
.00020. - 20 - green
.00040. - 40 - blue
.00080. - 75 - red
.00170. - 150 - yellow

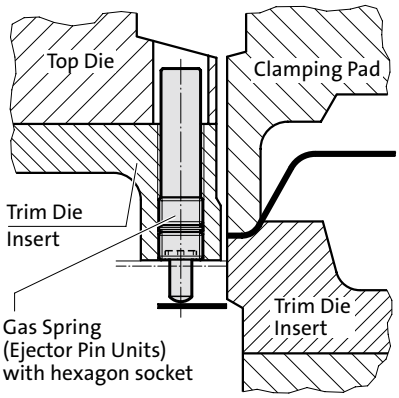

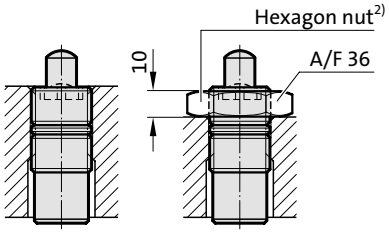

subject to alterations

Gas spring (Spring plunger), to WDX

Description:

Spring plungers are used as ejectors, damper pins, fixing and retaining pins in many sectors of the tool-, jig- and fixture-making industries. Assembly requires the use of special FIBRO insertion tool (2470.12.010.017)

Note:

Worn Gas springs cannot be repaired, they have to be replaced completely.

Pressure medium: Nitrogen - N_2
Max. filling pressure: 150 bar
Min. filling pressure: 20 bar
Working temperature: 0°C to +80°C
Temperature related force increase: ± 0,3%/°C
Max. recommended extensions per minute: approx. 30 to 80 (at 20°C)
Max. piston speed: 1,6 m/s

Attention!
Different colour coding for spring force used in WDX standard

Upon customers request, also available unfilled, Order No 2479.034.00000...., Colour: black

2479.034.

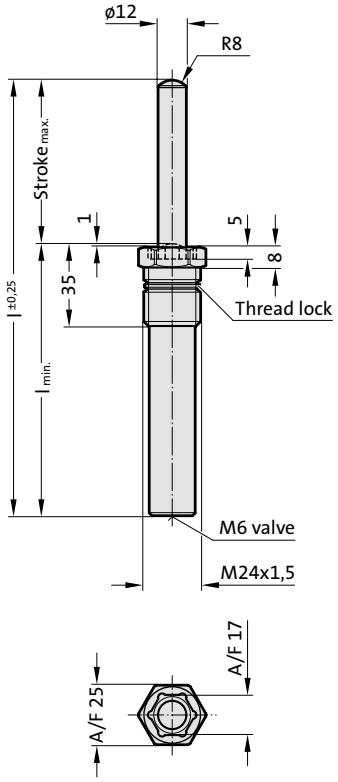



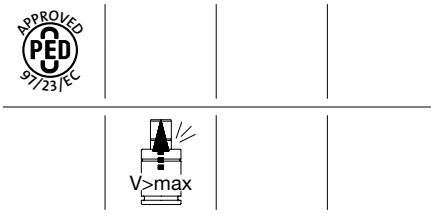

2479.034. Gas spring (Spring plunger), to WDX

Spring type:				.00020.		.00040.		.00080.		.00170.	
Order No*	$Stroke_{max.}$	l	$l_{min.}$	$F_{initial}$	F_{final}	$F_{initial}$	F_{final}	$F_{initial}$	F_{final}	$F_{initial}$	F_{final}
2479.034.□□□□□.010	10	65	55	23	32.5	45	65	85	122	170	243.5
2479.034.□□□□□.016	16	77	61	23	36.6	45	73.3	85	137.4	170	274.8
2479.034.□□□□□.020	20	85	65	23	36	45	72	85	134.5	170	268
2479.034.□□□□□.025	25	95	70	23	38.9	45	77.8	85	145.9	170	291.8
2479.034.□□□□□.030	30	105	75	23	37.5	45	75	85	141	170	281.5
2479.034.□□□□□.038	38	121	83	23	40.7	45	81.4	85	152.7	170	305.4
2479.034.□□□□□.040	40	125	85	23	38.5	45	77	85	144.5	170	289
2479.034.□□□□□.050	50	145	95	23	42	45	83.5	85	156.5	170	313
2479.034.□□□□□.060	60	165	105	23	42	45	84	85	157	170	314
2479.034.□□□□□.070	70	185	115	23	42	45	84	85	157.5	170	315
2479.034.□□□□□.080	80	205	125	23	42	45	84	85	159	170	315.5
2479.034.□□□□□.100	100	245	145	23	42	45	84.5	85	158	170	316.5
2479.034.□□□□□.125	125	295	170	23	42	45	84.5	85	158.5	170	317

*complete with spring type

Spring force marking:
Spring type - Pressure [bar] - Colour:
.00020. - 20 - green
.00040. - 40 - blue
.00080. - 75 - red
.00170. - 150 - yellow

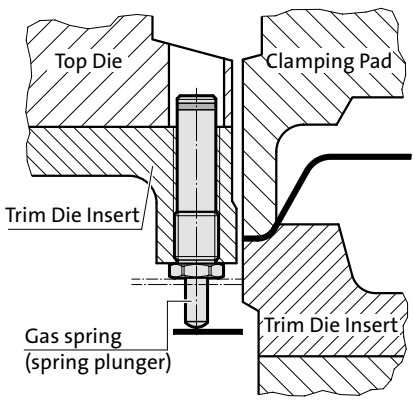

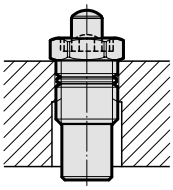



Gas spring, small dimension, low force

Gas spring, small dimension, low force
Mounting variations

2480.051.00013

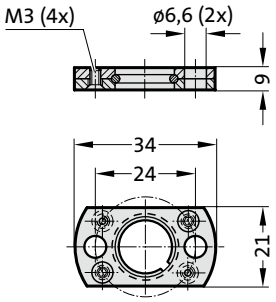

Note:

[1] Fixing at bottom thread only recommanded for stroke length up to 25 mm.

Mounting examples:

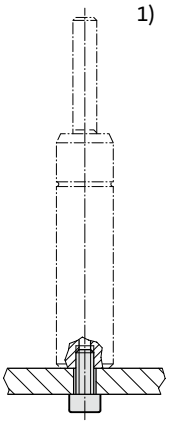

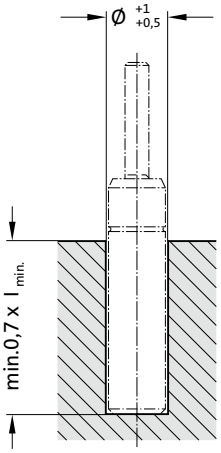

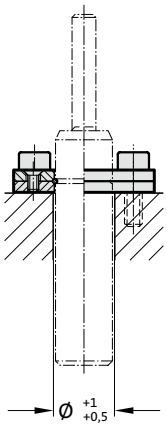

subject to alterations

Gas spring, small dimension and low force

Description:

The Gas springs are colour-coded according to the spring force rating ranges 13-25-38-50 daN.

All springs, regardless of their spring force ratings, are of the same design. The differing force ratings result exclusively from the differing charge pressures.
Gas can be added or reduced from below.

Note:

Worn Gas springs cannot be repaired, they have to be replaced completely.

Pressure medium: Nitrogen N_2
Max. filling pressure: 180 bar
Min. filling pressure: 20 bar
Working temperature: 0°C to +80°C
Temperature related force increase: ± 0.3%/°C
Max. recommended extensions per minute: approx. 40 to 100 (at 20°C)
Max. piston speed: 1.6 m/s

Spring forces as per spring diagram.

Upon customers request, also available unfilled, Order No 2482.72.00000...., Colour: black

2482.72.

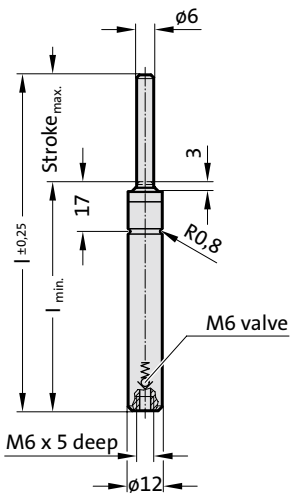



APPROVED PED 97/23/EC

V>max

P>max

2482.72. Gas spring, small dimension and low force

Order No*	Stroke max.	l	l min.
2482.72.□□□□□.007	7	56	49
2482.72.□□□□□.010	10	62	52
2482.72.□□□□□.013	12.7	67.4	54.7
2482.72.□□□□□.015	15	72	57
2482.72.□□□□□.019	19	80	61
2482.72.□□□□□.025	25	92	67
2482.72.□□□□□.038	38	118	80
2482.72.□□□□□.050	50	142	92
2482.72.□□□□□.063	63.5	172	108.5
2482.72.□□□□□.075	75	195	120
2482.72.□□□□□.080	80	205	125
2482.72.□□□□□.100	100	245	145
2482.72.□□□□□.125	125	295	170

*complete with initial spring force
Spring force marking: Initial spring force [daN] - Pressure [bar] - Colour:
.00013. - 45 - green
.00025. - 90 - blue
.00038. - 135 - red
.00050. - 180 - yellow

Initial spring force versus charge pressure

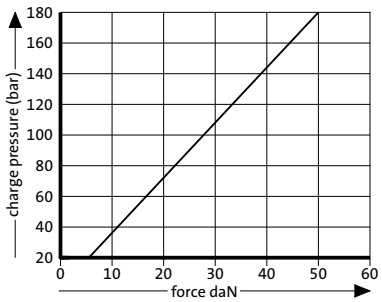

Spring force Diagram displacement versus stroke rise

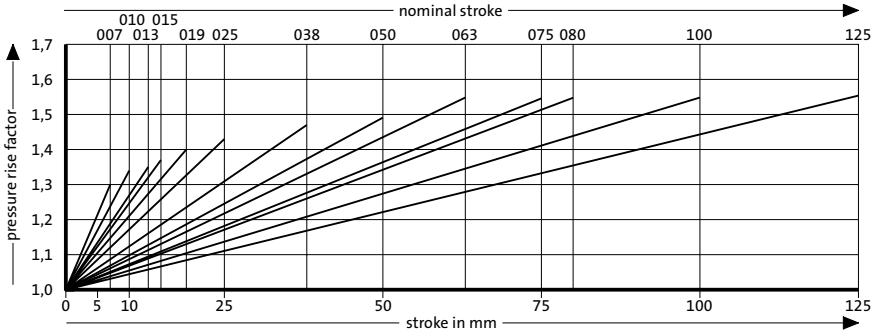

Pressure rise factor accounts for displacement but not external influences!

Gas Spring, small dimension, low force
Mounting variations

2480.051.00018

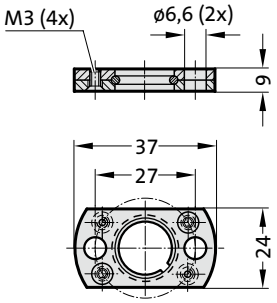

Note:

[1] Fixing at bottom thread only recommanded for stroke length up to 25 mm.

Mounting examples:

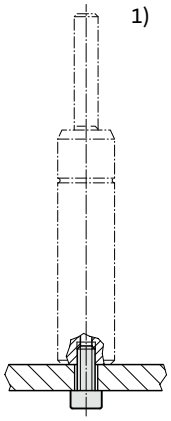

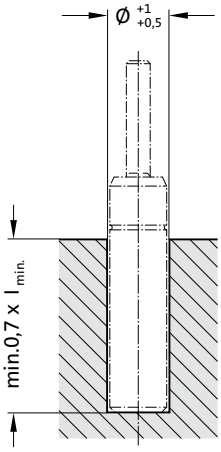

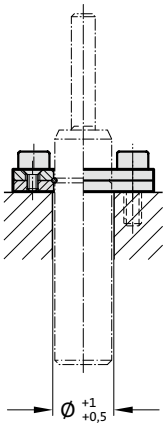

subject to alterations

Gas spring, small dimension and low force

Description:

The Gas springs are colour-coded according to the spring force rating ranges 18-35-50-70 daN.

All springs, regardless of their spring force ratings, are of the same design. The differing force ratings result exclusively from the differing charge pressures.
Gas can be added or reduced from below.

Note:

Worn Gas springs cannot be repaired, they have to be replaced completely.

Pressure medium: Nitrogen N_2
Max. filling pressure: 180 bar
Min. filling pressure: 20 bar
Working temperature: 0°C to +80°C
Temperature related force increase: ± 0.3%/°C
Max. recommended extensions per minute: approx. 40 to 100 (at 20°C)
Max. piston speed: 1.6 m/s

Spring forces as per spring diagram.

Upon customers request, also available unfilled, Order No 2482.73.00000. 1,
Colour: black

2482.73. .1

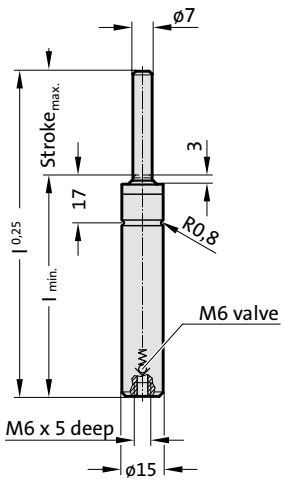



APPROVED PED 97/23/EC

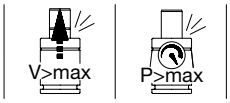

2482.73. .1 Gas spring, small dimension and low force

Order No*	Stroke max.	l	l min.
2482.73.□□□□□.007.1	7	56	49
2482.73.□□□□□.010.1	10	62	52
2482.73.□□□□□.013.1	12.7	67.4	54.7
2482.73.□□□□□.015.1	15	72	57
2482.73.□□□□□.019.1	19	80	61
2482.73.□□□□□.025.1	25	92	67
2482.73.□□□□□.038.1	38	118	80
2482.73.□□□□□.050.1	50	142	92
2482.73.□□□□□.063.1	63.5	172	108.5
2482.73.□□□□□.075.1	75	195	120
2482.73.□□□□□.080.1	80	205	125
2482.73.□□□□□.100.1	100	245	145
2482.73.□□□□□.125.1	125	295	170

*complete with initial spring force
Spring force marking: Initial spring force [daN] - Pressure [bar] - Colour:
.00018. - 45 - green
.00035. - 90 - blue
.00050. - 135 - red
.00070. - 180 - yellow

Initial spring force
versus charge pressure

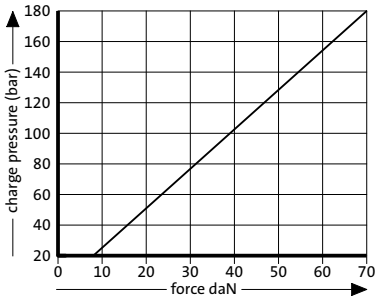

Spring force Diagram displacement versus stroke rise

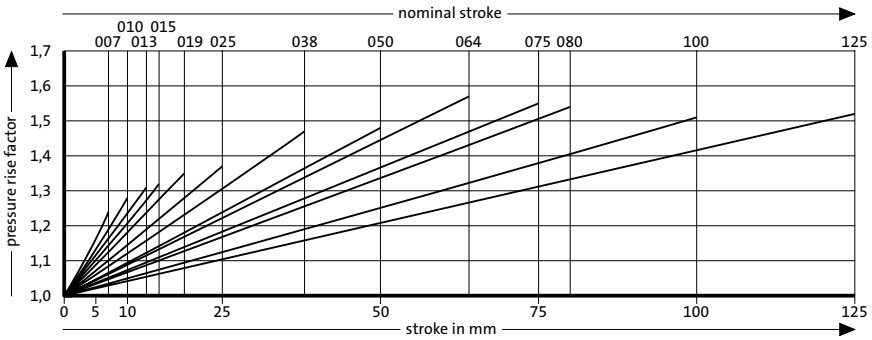

Pressure rise factor accounts for displacement but not external influences!

Gas spring, small dimension, low force
Mounting variations

Note:

[1] Fixing at bottom thread only recommanded for stroke length up to 25 mm.

2480.051.03.00030

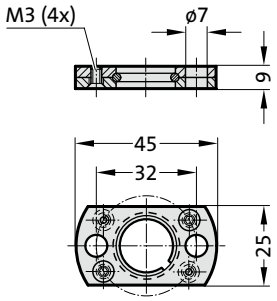

2480.051.03.00030

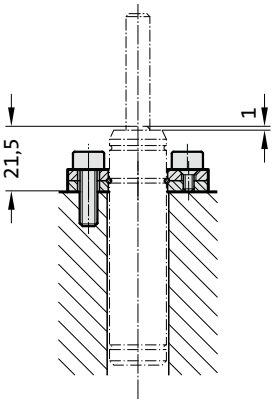

2480.052.00030

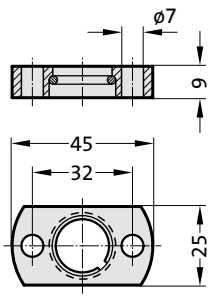

Mounting examples:

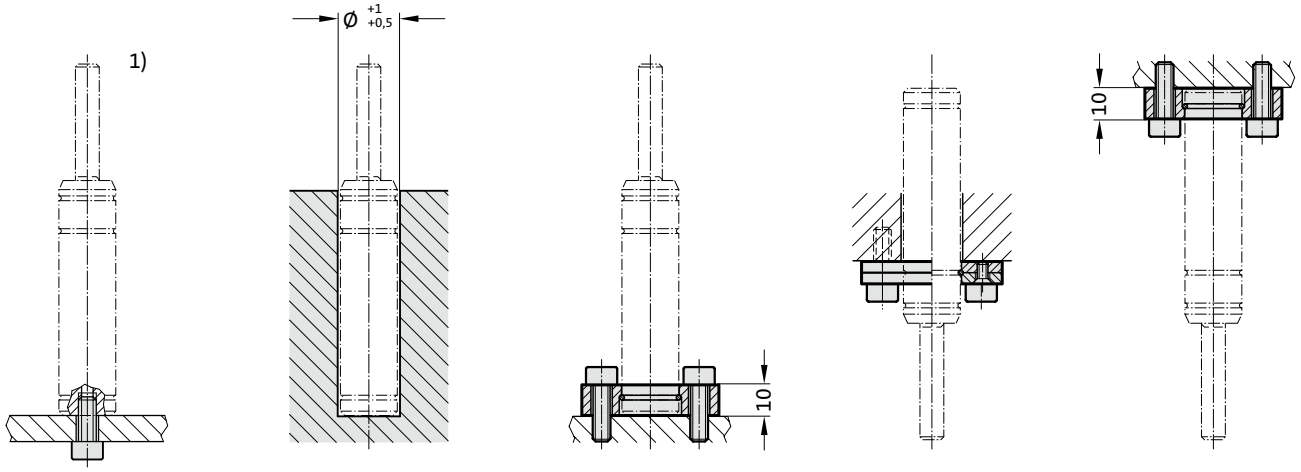

Gas spring, small dimension and low force

Description:

The gas springs are colour-coded according to the spring force rating ranges 30-50-70-90 daN.

All springs, regardless of their spring force ratings, are of the same design. The differing force ratings result exclusively from the differing charge pressures.
Gas can be added or reduced from below.

Note:

Worn gas springs cannot be repaired, they have to be replaced completely.

Pressure medium: Nitrogen N_2
Max. filling pressure: 180 bar
Min. filling pressure: 25 bar
Working temperature: 0°C to +80°C
Temperature related force increase: ± 0.3%/°C
Max. recommended extensions per minute: approx. 100 to 150 (at 20°C)
Max. piston speed: 1.6 m/s

Spring forces as per spring diagram.

Upon customers request, also available unfilled, Order No 2482.74.00000. 2,
Colour: black

2482.74. .2

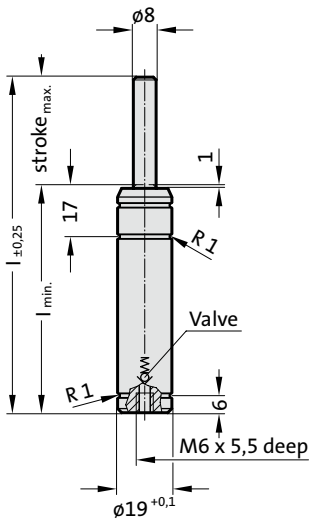



APPROVED PED 97/23/EC | VDI | ISO

S>max | V>max | P>max

2482.74. .2 Gas spring, small dimension and low force

Order No*	Stroke max.	l	l min.
2482.74.□□□□□.007.2	7	56	49
2482.74.□□□□□.010.2	10	62	52
2482.74.□□□□□.015.2	15	72	57
2482.74.□□□□□.025.2	25	92	67
2482.74.□□□□□.038.2	38.1	118.2	80.1
2482.74.□□□□□.050.2	50	142	92
2482.74.□□□□□.063.2	63.5	172	108.5
2482.74.□□□□□.080.2	80	205	125
2482.74.□□□□□.100.2	100	245	145
2482.74.□□□□□.125.2	125	295	170
2482.74.□□□□□.150.2	150	345	195

*complete with initial spring force

Spring force marking:
Initial spring force [daN] - Pressure [bar] - Colour:
.00030. - 60 - green
.00050. - 100 - blue
.00070. - 140 - red
.00090. - 180 - yellow

Initial spring force versus charge pressure

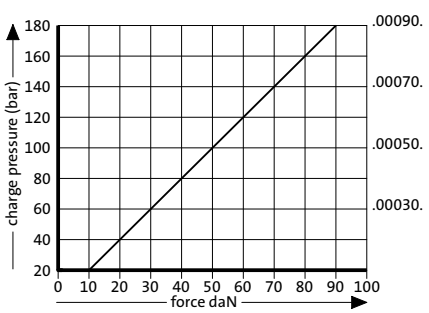

Spring force Diagram displacement versus stroke rise

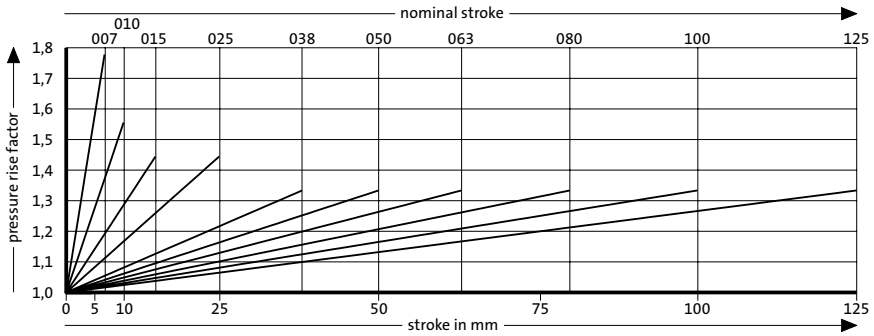

Pressure rise factor accounts for displacement but not external influences!

Gas spring, small dimension, low force
Mounting variations

2480.053.00150

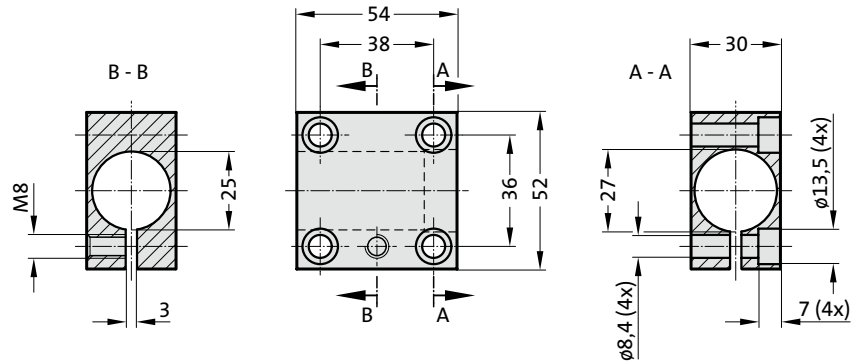

2480.051.00150

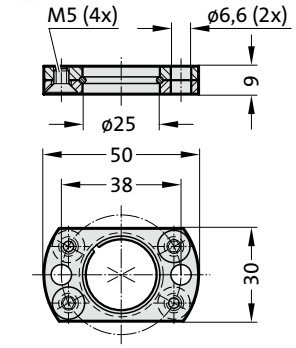

Note:

[2] Attention:
The spring force must be absorbed by the stop surface.

Mounting example:

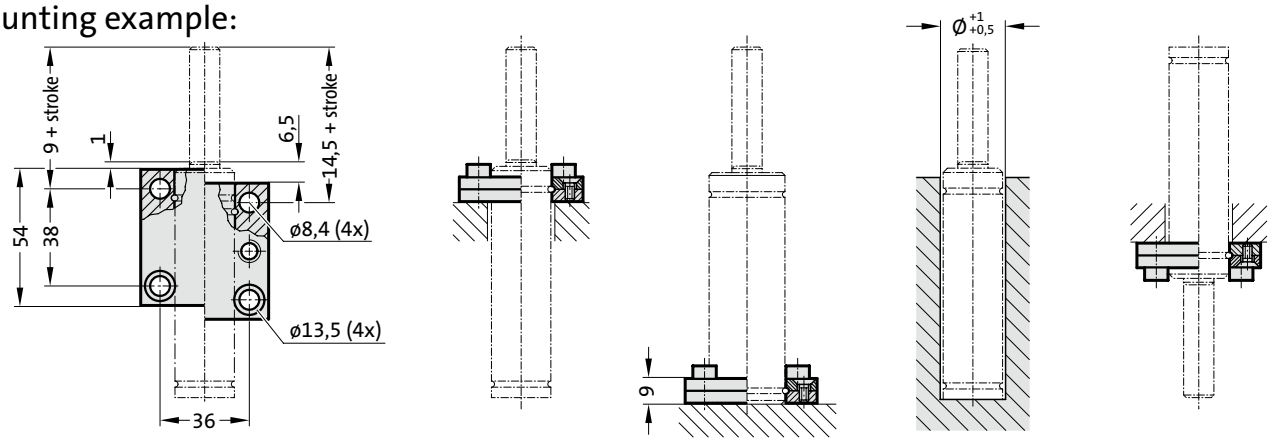

subject to alterations

Gas spring, small dimension and low force

Description:

The Gas springs are colour-coded according to the spring force rating ranges 50–100–150–200 daN.

All springs, regardless of their spring force ratings, are of the same design. The differing force ratings result exclusively from the differing charge pressures.
Do take into consideration the colour-coded pressure rating during repair work and recharging.

Note:

Order No for spare parts kit: 2480.21.00150

Pressure medium: Nitrogen N_2
Max. filling pressure: 180 bar
Min. filling pressure: 25 bar
Working temperature: 0°C to +80°C
Temperature related force increase: ± 0.3%/°C
Max. recommended extensions per minute: approx. 80 to 100 (at 20°C)
Max. piston speed: 1.6 m/s

Spring forces as per spring diagram.

Upon customers request, also available unfilled, Order No 2482.21.00000....,
Colour: black

2480.21.

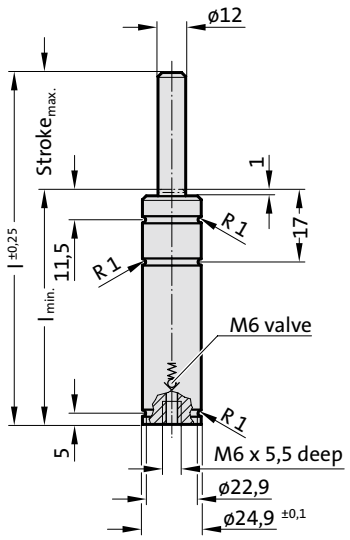



APPROVED PED 97/23/EC | VDI | ISO

S>max | V>max | P>max

2480.21. Gas spring, small dimension and low force

Order No*	Stroke max.	l	l min.
2480.21.□□□□□.010	10	62	52
2480.21.□□□□□.013	12.7	67.4	54.7
2480.21.□□□□□.015	15	72	57
2480.21.□□□□□.016	16	74	58
2480.21.□□□□□.025	25	92	67
2480.21.□□□□□.038	38.1	118.2	80.1
2480.21.□□□□□.050	50	142	92
2480.21.□□□□□.063	63.5	172	108.5
2480.21.□□□□□.080	80	205	125
2480.21.□□□□□.100	100	245	145
2480.21.□□□□□.125	125	295	170

*complete with initial spring force

Spring force marking:
Initial spring force [daN] - Pressure [bar] - Colour:
.00050. - 45 - green
.00100. - 90 - blue
.00150. - 135 - red
.00200. - 180 - yellow

Initial spring force versus charge pressure

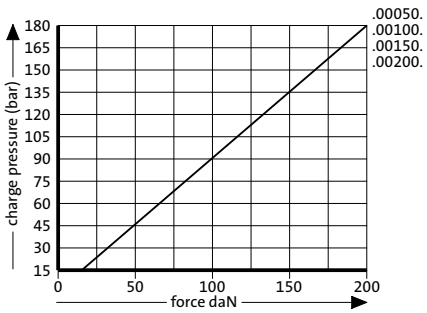

Spring force Diagram displacement versus stroke rise

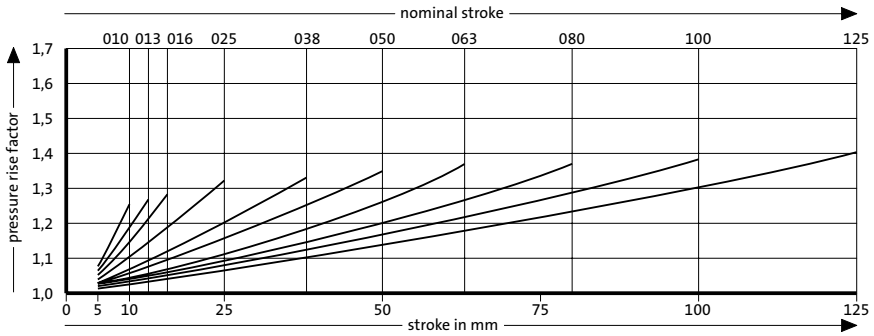

Pressure rise factor accounts for displacement but not external influences!

Gas spring, small dimension and low force
Mounting variations

2480.022.00150

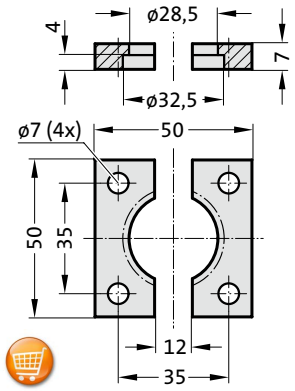

2480.055.00150

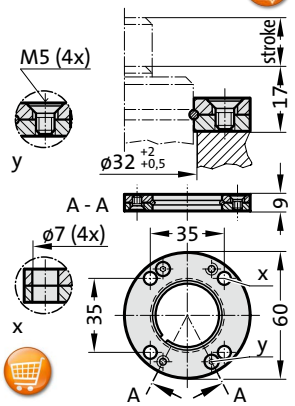

2480.057.00150

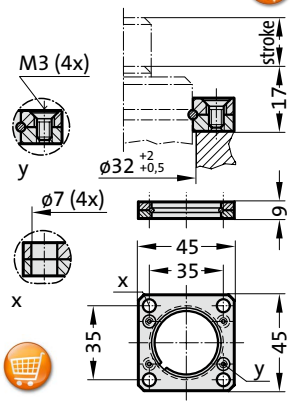

2480.044.03.00150 [2)]

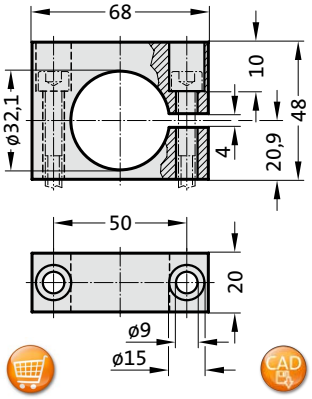

2480.044.00150 [2)]

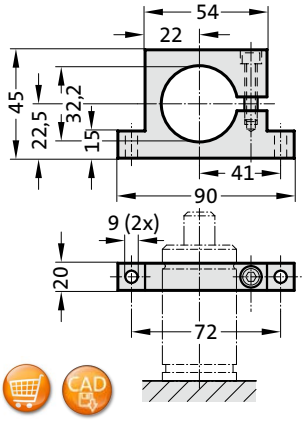

Note:

[2)] Attention:
The spring force must be absorbed by the stop surface.

Mounting examples:

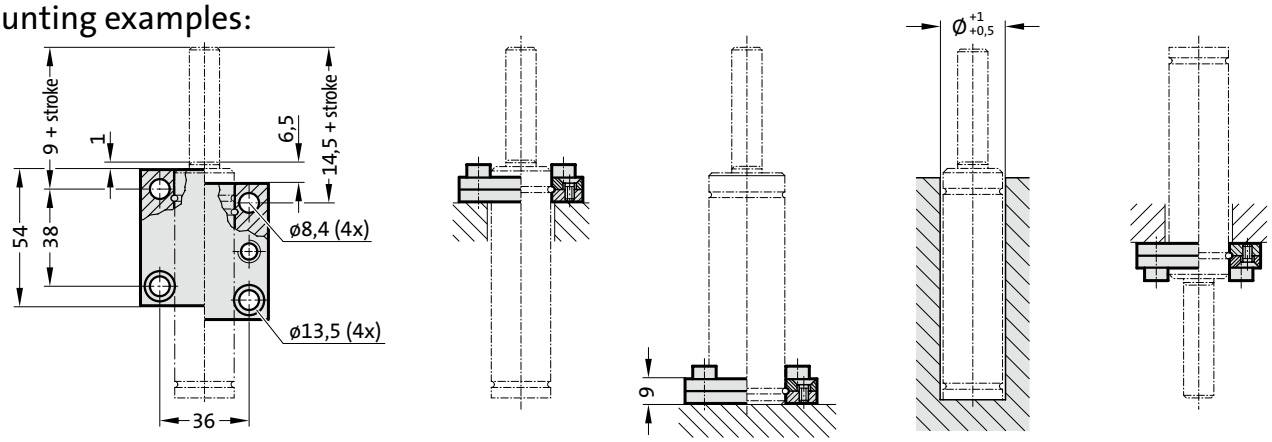

subject to alterations

Gas spring, small dimension and low force

Description:

The Gas springs are colour-coded according to the spring force rating ranges 50–100–150–200 daN.

All springs, regardless of their spring force ratings, are of the same design. The differing force ratings result exclusively from the differing charge pressures.
Do take into consideration the colour-coded pressure rating during repair work and recharging.

Note:

Order No for spare parts kit: 2480.21.00150

Pressure medium: Nitrogen N_2
Max. filling pressure: 180 bar
Min. filling pressure: 25 bar
Working temperature: 0°C to +80°C
Temperature related force increase: ± 0.3%/°C
Max. recommended extensions per minute: approx. 80 to 100 (at 20°C)
Max. piston speed: 1.6 m/s

Spring forces as per spring diagram.

Upon customers request, also available unfilled, Order No 2482.22.00000...., Colour: black

2480.22. .1

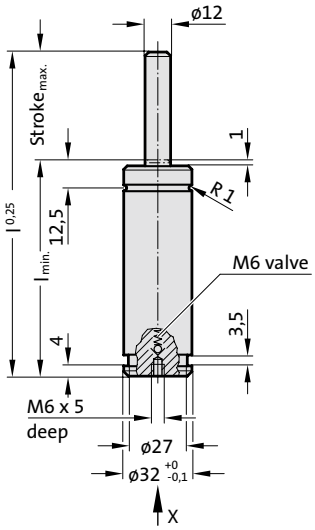

View X - Gas spring

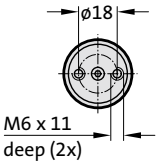



APPROVED PED 97/23/EC | VDI | ISO

S>max | V>max | P>max

2480.22. .1 Gas spring, small dimension and low force

Order No*	Stroke max.	l	l min.
2480.22.□□□□□.010.1	10	70	60
2480.22.□□□□□.013.1	12.7	75.4	62.7
2480.22.□□□□□.016.1	16	82	66
2480.22.□□□□□.025.1	25	100	75
2480.22.□□□□□.038.1	38.1	126.2	88.1
2480.22.□□□□□.050.1	50	150	100
2480.22.□□□□□.063.1	63.5	177	113.5
2480.22.□□□□□.080.1	80	210	130
2480.22.□□□□□.100.1	100	250	150
2480.22.□□□□□.125.1	125	300	175

*complete with initial spring force

Spring force marking:
Initial spring force [daN] - Pressure [bar] - Colour:
.00050. - 45 - green
.00100. - 90 - blue
.00150. - 135 - red
.00200. - 180 - yellow

Initial spring force versus charge pressure

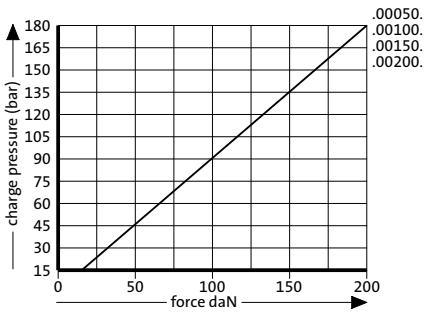

Spring force Diagram displacement versus stroke rise

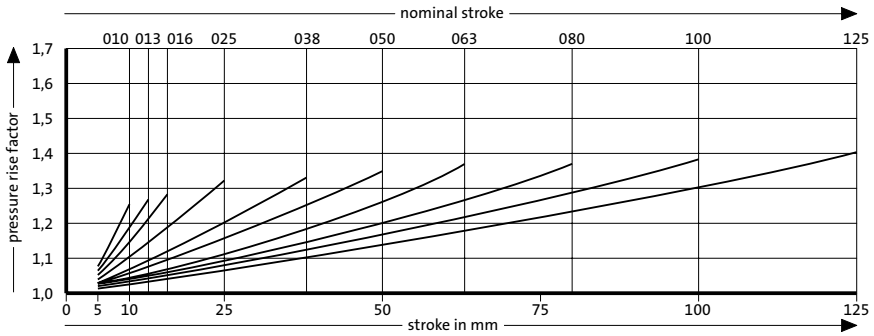

Pressure rise factor accounts for displacement but not external influences!

Gas spring, small dimension, low force
Mounting variations

2480.051.00150

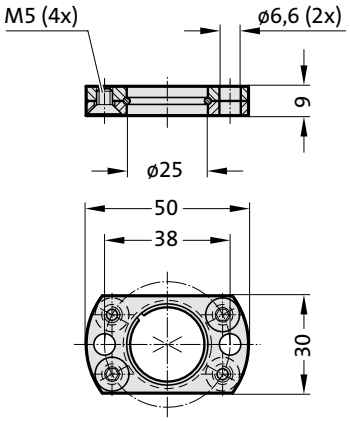

2480.053.00150

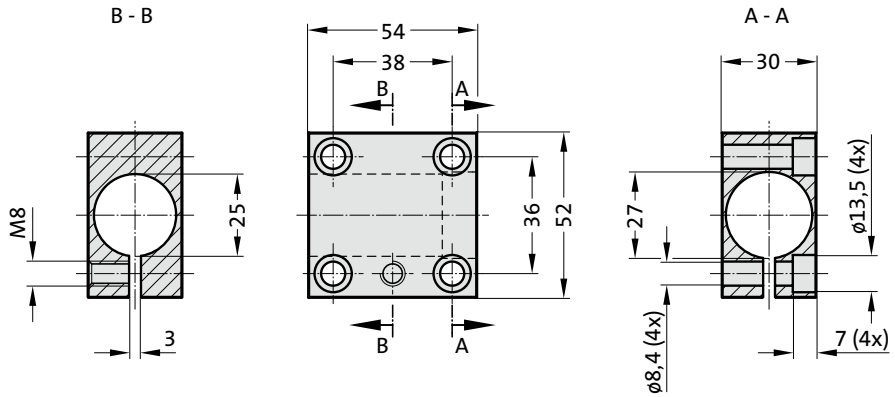

Note:

Only gas spring with a stroke of 25 mm or greater can be attached using the upper groove.
Only gas spring with a stroke of 38,1 mm or greater can be attached using the lower groove.

Mounting examples:

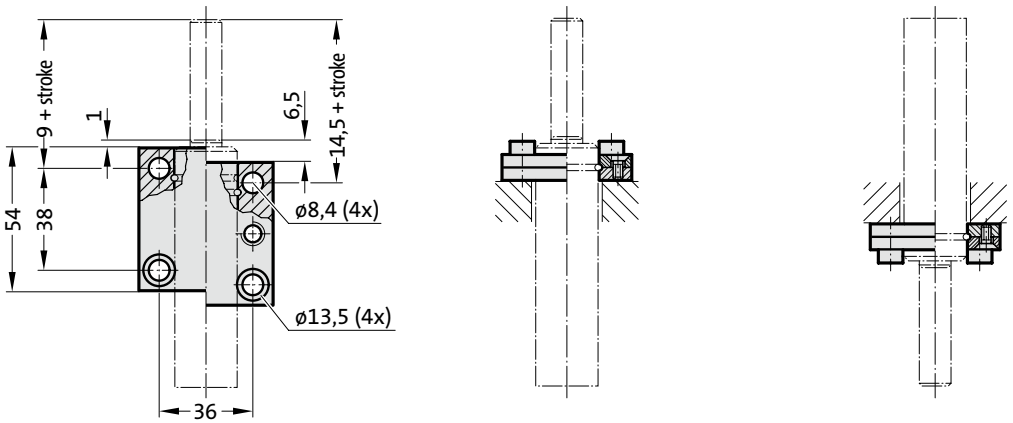

subject to alterations

Gas spring, small dimension and low force

Description:
Gas spring will be delivered unfilled and can only be used in a permanent connection (valveless).

Note:
Initial spring force at 180 bar = 200 daN

Order No for spare parts kit: 2480.21.00150

Pressure medium: Nitrogen - N_2
Max. filling pressure: 180 bar
Min. filling pressure: 25 bar
Working temperature: 0°C bis +80°C
Temerature related force increase: ± 0,3%/°C
Max. recommended extensions per minute: ca. 80 to 100 (at 20°C)
Max. piston speed: 1,6 m/s

Spring forces as per spring diagram.

2480.23.

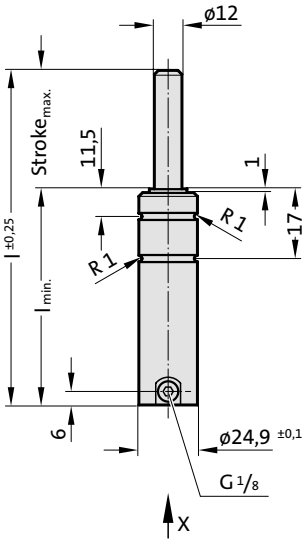

View X





APPROVED PED 97/23/EC

S>max V>max P>max

2480.23.

Gas spring, small dimension and low force

Order No	Stroke max.	l min.	l
2480.23.00000.010	10	52	62
2480.23.00000.013	12.7	54.7	67.4
2480.23.00000.016	16	58	74
2480.23.00000.025	25	67	92
2480.23.00000.038	38.1	80.1	118.2
2480.23.00000.050	50	92	142
2480.23.00000.063	63.5	108.5	172
2480.23.00000.080	80	125	205
2480.23.00000.100	100	145	245
2480.23.00000.125	125	170	295

Initial spring force
versus charge pressure

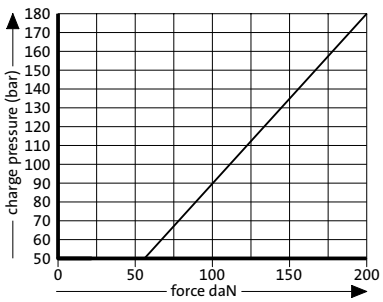

Spring force Diagram displacement versus stroke rise

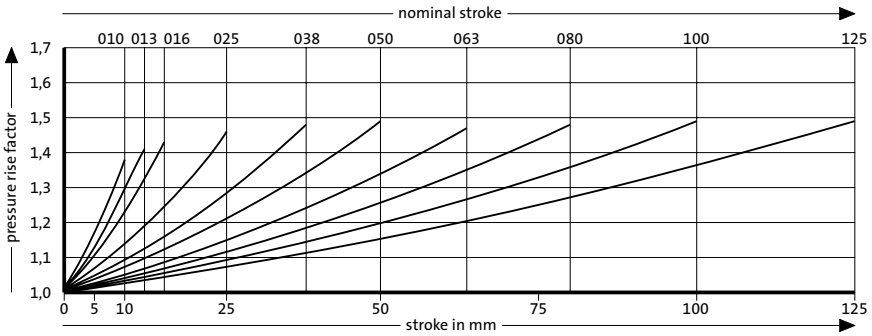

Pressure rise factor accounts for displacement but not external influences!



Gas springs
Standard

FIBRO

Gas Spring, Standard
Mounting variations

2480.022.00250

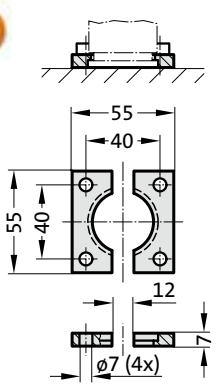

2480.055.00250

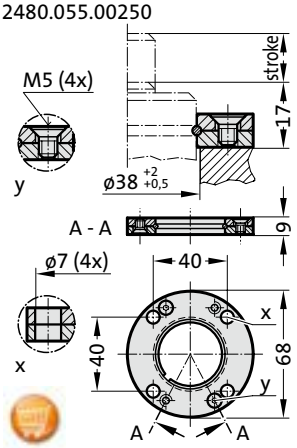

2480.057.00250

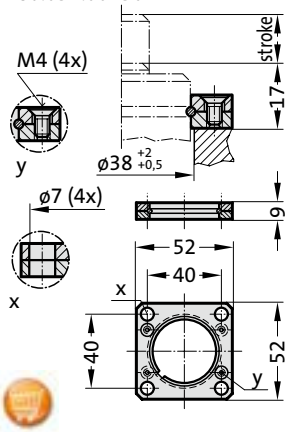

2480.007.00250

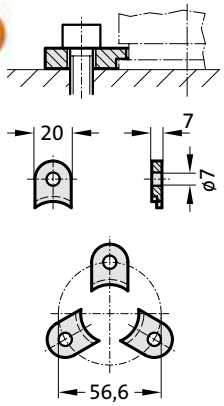

2480.008.00250 [3]

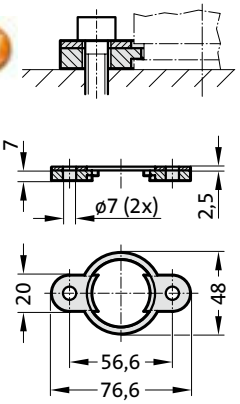

2480.044.03.00250 [2]

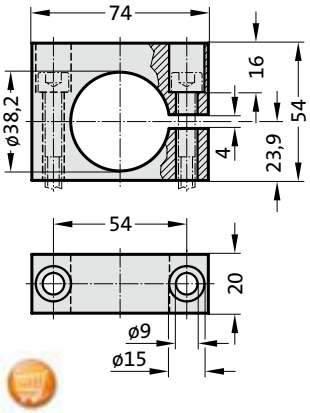

2480.044.00250 [2]

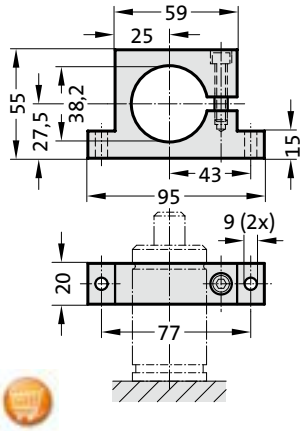

2480.010.00250.055 [3]
2480.010.00250.095* [3]

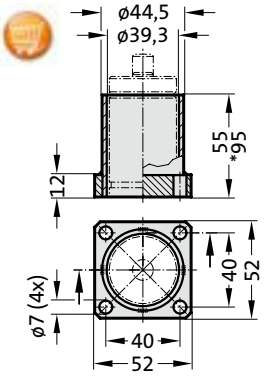

Note:

[2] Attention:
The spring force must be absorbed by the stop surface!

[3] Not for use with composite connection.

Gas spring, Standard

Note:
Initial spring force at 150 bar = 250 daN

Order No for spare parts kit: 2480.13.00250

Pressure medium: Nitrogen N_2
Max. filling pressure: 150 bar
Min. filling pressure: 50 bar
Working temperature: 0°C to +80°C
Temperature related force increase: ± 0.3%/°C
Max. recommended extensions per minute: approx. 80 to 100 (at 20°C)
Max. piston speed: 1.6 m/s

2480.13.00250.

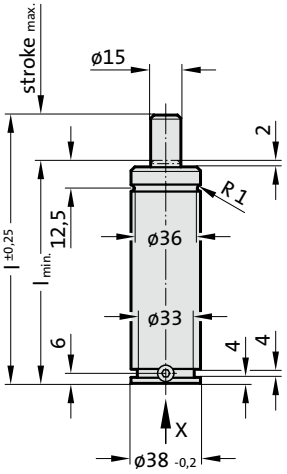



View X

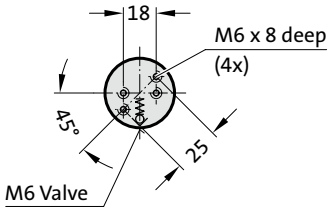

2480.13.00250.
Gas spring, Standard

Order No	$Hub_{max.}$	$l_{min.}$	l
2480.13.00250.010	10	60	70
2480.13.00250.013	12.7	62.7	75.4
2480.13.00250.016	16	66	82
2480.13.00250.019	19	69	88
2480.13.00250.025	25	75	100
2480.13.00250.038	38.1	88.1	126.2
2480.13.00250.050	50	100	150
2480.13.00250.063	63.5	113.5	177
2480.13.00250.080	80	130	210
2480.13.00250.100	100	150	250
2480.13.00250.125	125	175	300

Initial spring force
versus charge pressure

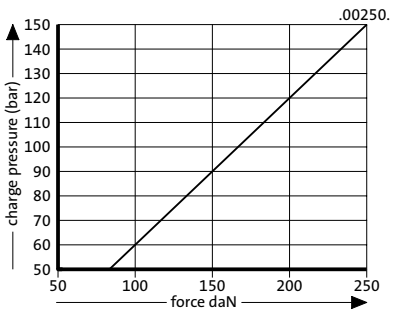

Spring force Diagram displacement versus stroke rise

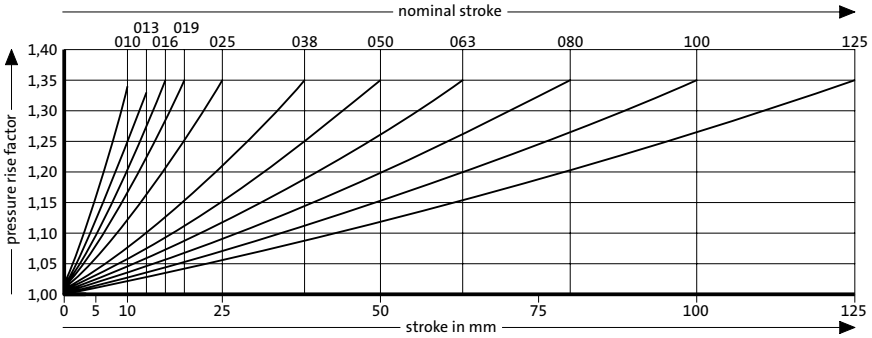

Pressure rise factor accounts for displacement but not external influences!

FIBRO

Gas Spring, Standard
Mounting variations

2480.011.00500.2

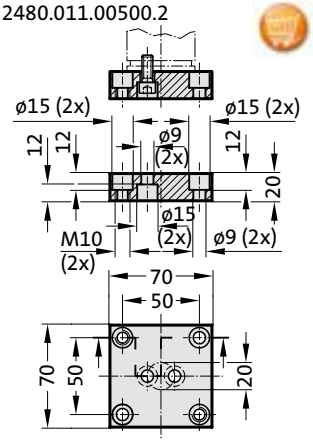

2480.011.00500

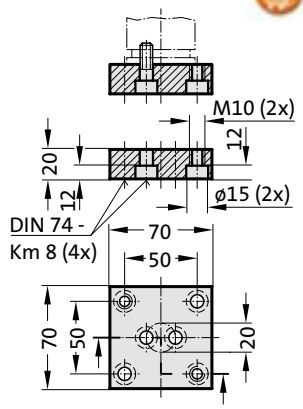

2480.011.00500.1

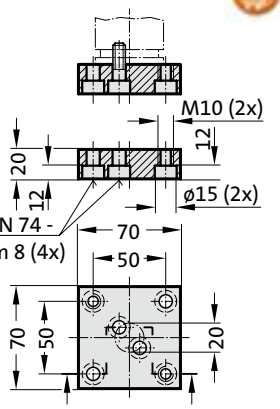

2480.022.00500

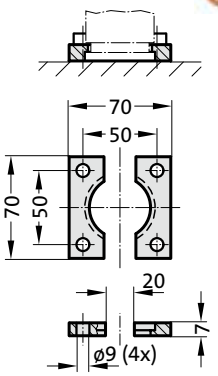

2480.055.00500

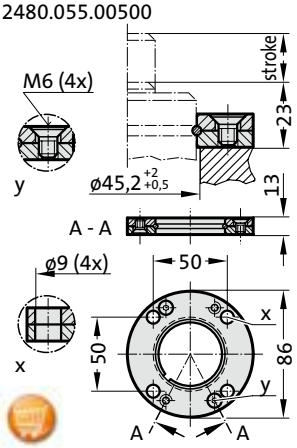

2480.057.00500

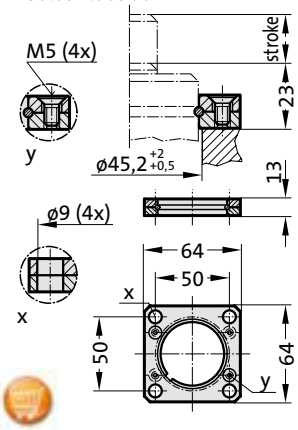

2480.007.00500

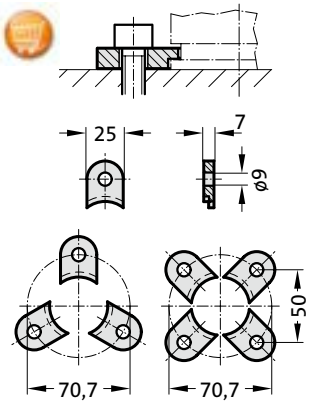

2480.008.00500 3)

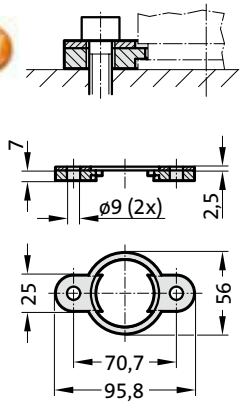

2480.044.03.00500 2)

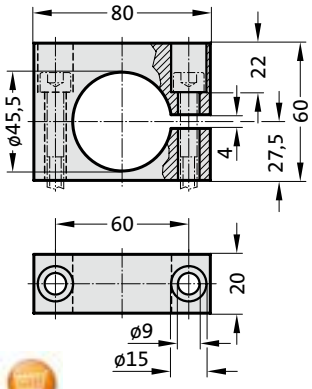

2480.044.00500 2)

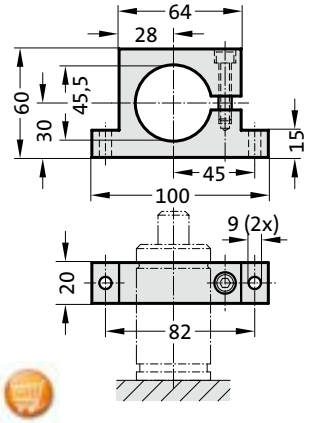

2480.010.00500.095 3)
2480.010.00500.180* 3)

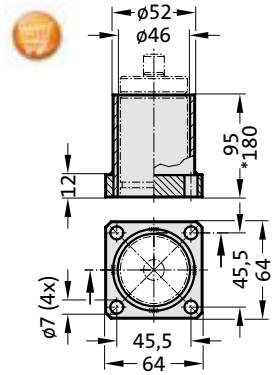

2480.064.00500 4)

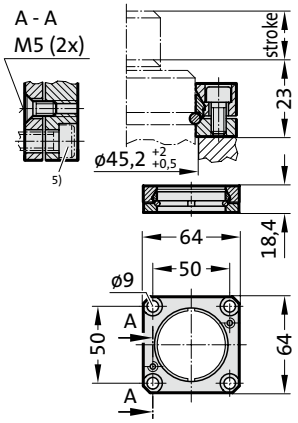

Note:

2) Attention:
The spring force must be absorbed by the stop surface!

3) Not for use with composite connection.

4) Square collar flange, non-rotating, fixing for composite connection.

5) Machine screws with hexagonal socket (compact head recommended)

Gas spring, Standard

Note:

Initial spring force at 150 bar = 470 daN

Order No for spare parts kit: 2480.13.00500

Pressure medium: Nitrogen N_2
Max. filling pressure: 150 bar
Min. filling pressure: 50 bar
Working temperature: 0°C to +80°C
Temperature related force increase: ± 0.3%/°C
Max. recommended extensions per minute: approx. 40 to 80 (at 20°C)
Max. piston speed: 1.6 m/s

2480.13.00500.

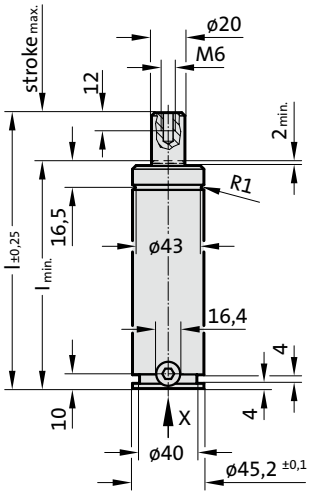

View X

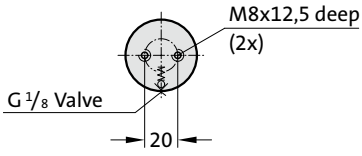



S>max | V>max | P>max | Flex Guide™

2480.13.00500.
Gas spring, Standard

Order No	Stroke max.	l min.	l
2480.13.00500.010	10	95	105
2480.13.00500.013	12.7	97.7	110.4
2480.13.00500.025	25	110	135
2480.13.00500.038	38.1	123.1	161.2
2480.13.00500.050	50	135	185
2480.13.00500.063	63.5	148.5	212
2480.13.00500.080	80	165	245
2480.13.00500.100	100	185	285
2480.13.00500.125	125	210	335
2480.13.00500.160	160	245	405

Initial spring force
versus charge pressure

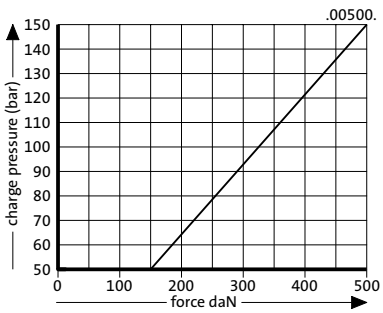

Spring force Diagram displacement versus stroke rise

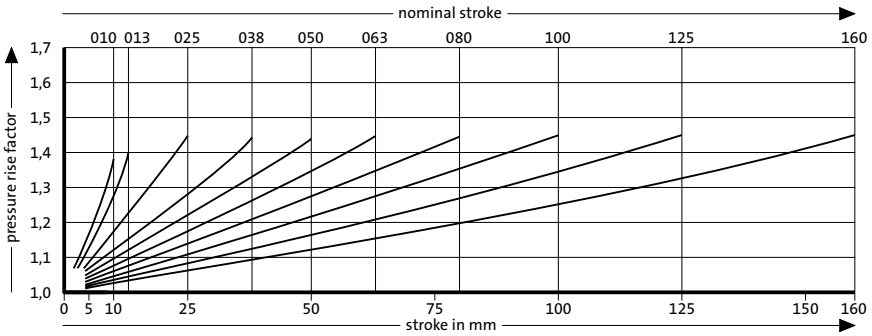

Pressure rise factor accounts for displacement but not external influences!

FIBRO

Gas Spring, Standard
Mounting variations

2480.011.00750.3

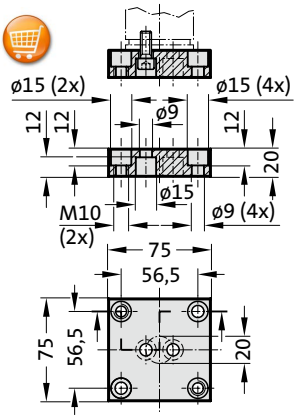

2480.011.00750

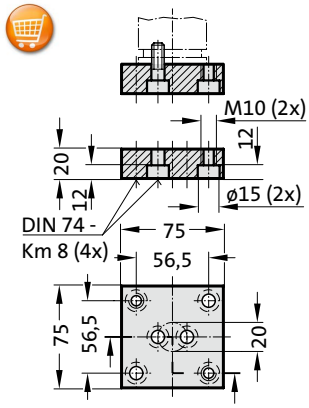

2480.011.00750.1

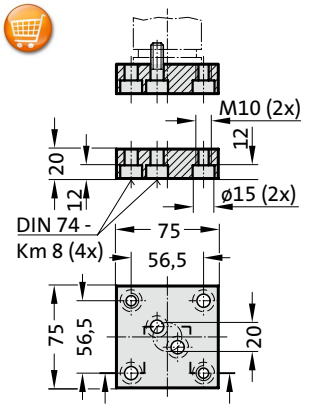

2480.022.00750

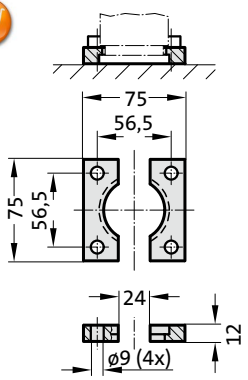

2480.055.00750

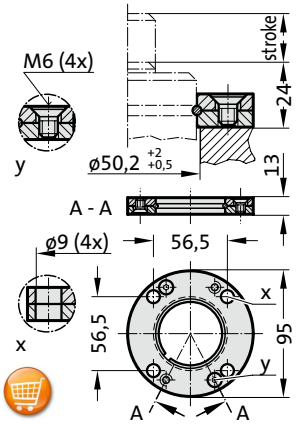

2480.057.00750

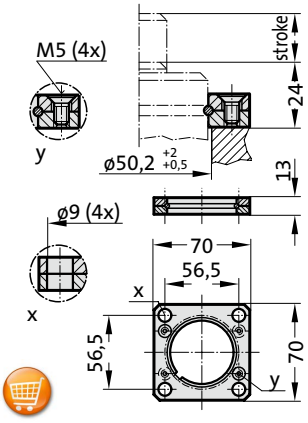

2480.007.00750

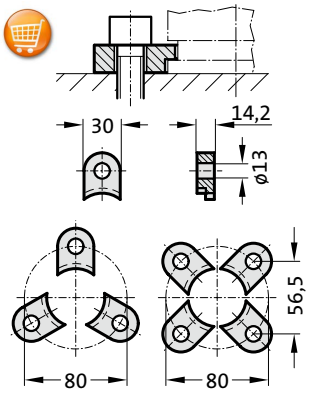

2480.008.00750 3)

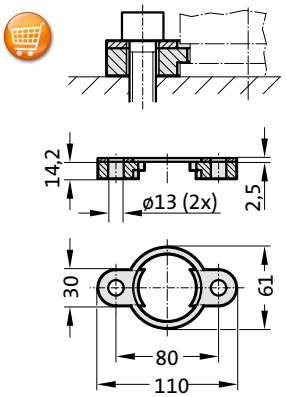

2480.064.00750 4)

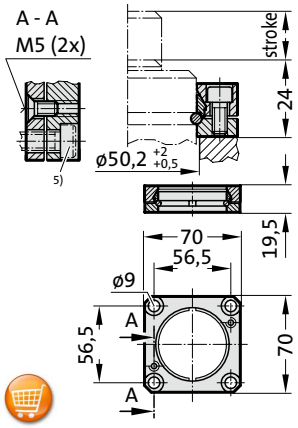

2480.044.00750 2)

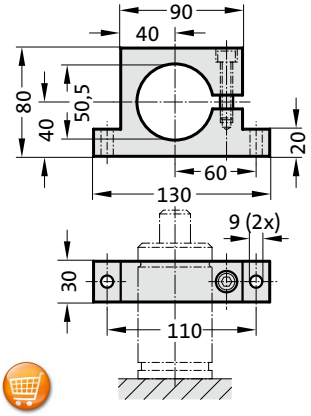

2480.010.00750.115 3)
2480.010.00750.190* 3)

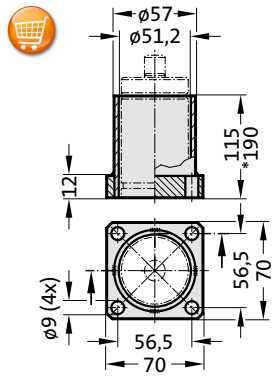

2480.045.00750 2)

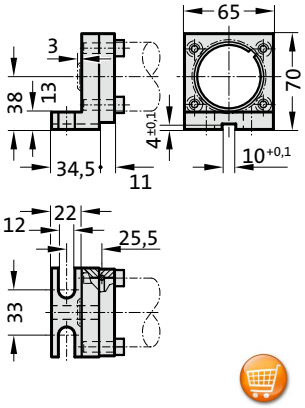

2480.047.00750 2)

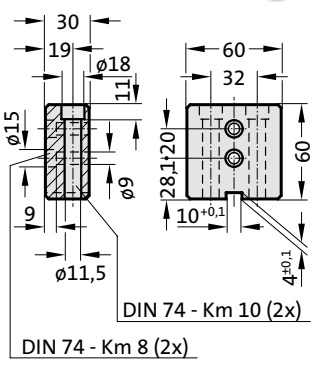

2480.044.03.00750 2)

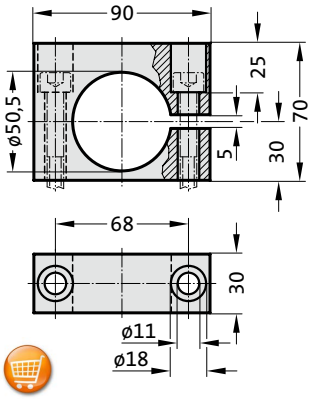

Note:

2) Attention:
The spring force must be absorbed by the stop surface!

3) Not for use with composite connection.

4) Square collar flange, non-rotating, fixing for composite connection.

5) Machine screws with hexagonal socket (compact head recommended)

subject to alterations

Gas spring, Standard

Note:

Initial spring force at 150 bar = 750 daN

Order No for spare parts kit: 2480.13.00750
Order No for spare parts kit: to Renault standard EM24.54.700 2480.13.00750.R
Gas spring to Renault standard EM24.54.700
Order No (example): 2480.13.00750. .R

1) Special stroke lengths
Not for gas springs to Renault Standard EM24.54.700.

Pressure medium: Nitrogen N_2
Max. filling pressure: 150 bar
Min. filling pressure: 25 bar
Working temperature: 0°C to +80°C
Temperature related force increase: ± 0.3%/°C
Max. recommended extensions per minute: approx. 15 to 40 (at 20°C)
Max. piston speed: 1.6 m/s
for 2480. ... .R: 2.0 m/s

2480.13.00750.

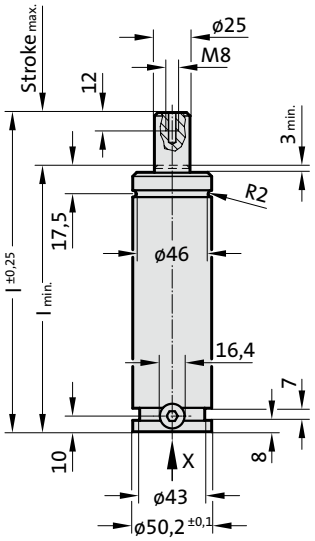

View X - Gas spring

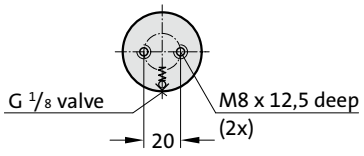



APPROVED PED 97/23/EC | VDI | ISO

S>max | V>max | P>max | Flex Guide™

2480.13.00750.
Gas spring, Standard

Order No		Stroke$_{max.}$	l$_{min.}$	l
2480.13.00750.013		12.7	107.7	120.4
2480.13.00750.025		25	120	145
2480.13.00750.038		38.1	133.1	171.2
2480.13.00750.050		50	145	195
2480.13.00750.063		63.5	158.5	222
2480.13.00750.075	1)	75	170	245
2480.13.00750.080		80	175	255
2480.13.00750.088	1)	87.5	182.5	270
2480.13.00750.100		100	195	295
2480.13.00750.113	1)	112.5	207.5	320
2480.13.00750.125		125	220	345
2480.13.00750.138	1)	137.5	232.5	370
2480.13.00750.150	1)	150	245	395
2480.13.00750.160		160	255	415
2480.13.00750.175	1)	175	270	445
2480.13.00750.200		200	295	495
2480.13.00750.225	1)	225	320	545
2480.13.00750.250		250	345	595
2480.13.00750.275		275	370	645
2480.13.00750.300		300	395	695

Initial spring force
versus charge pressure

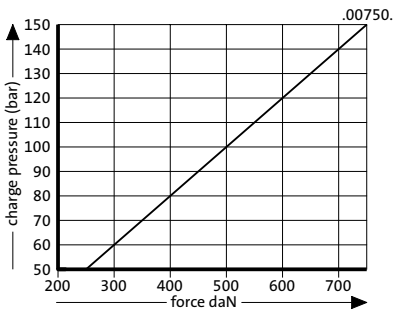

Spring force Diagram displacement versus stroke rise

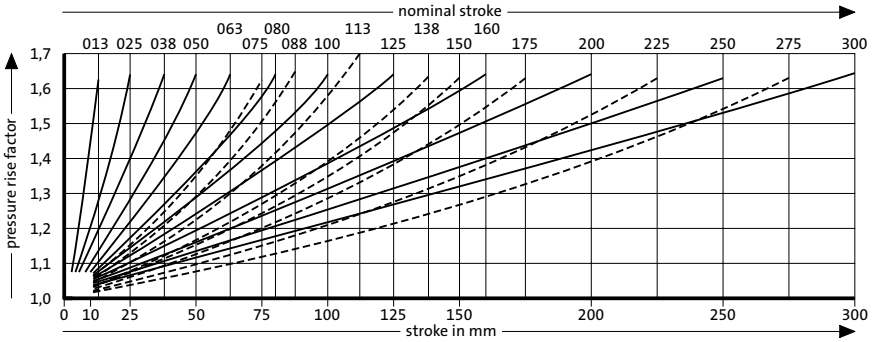

Pressure rise factor accounts for displacement but not external influences!

FIBRO

Gas spring, Standard
Mounting variations

2480.011.01500

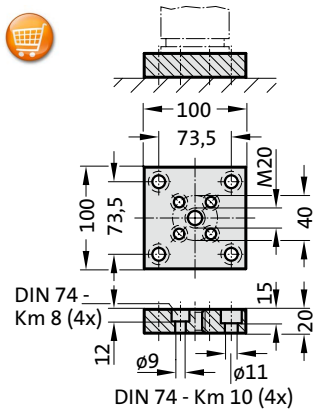

2480.011.01500.2

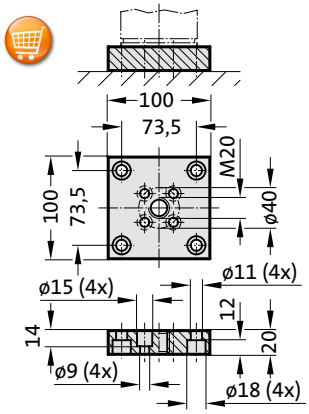

2480.022.01500

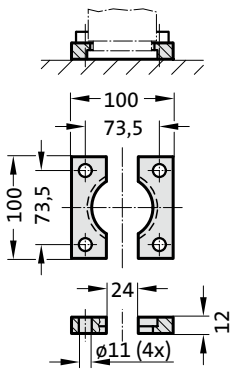

2480.055.01500

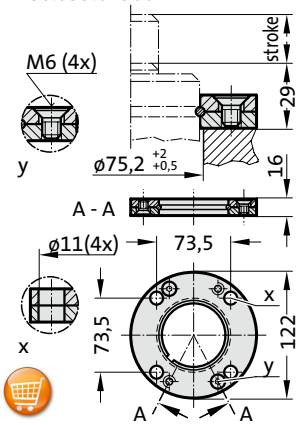

2480.057.01500

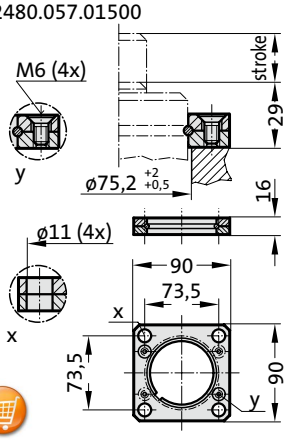

2480.007.01500

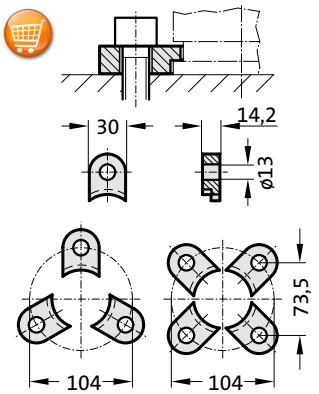

2480.008.01500 3)

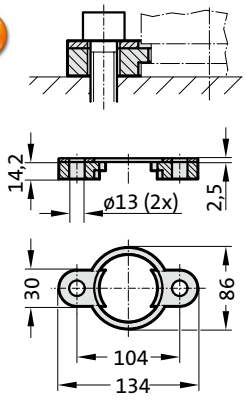

2480.064.01500 4)

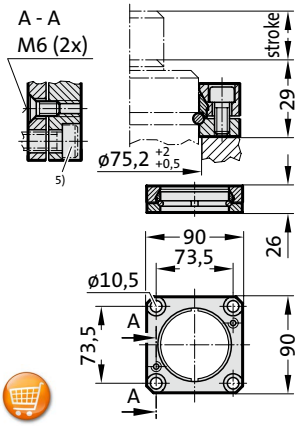

2480.044.01500 2)

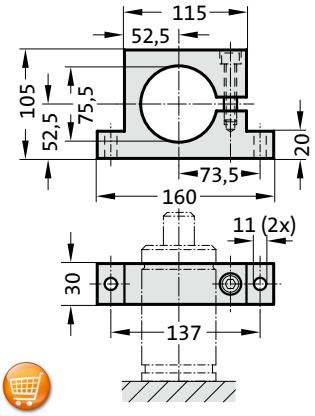

2480.010.01500.130 3)
2480.010.01500.205* 3)

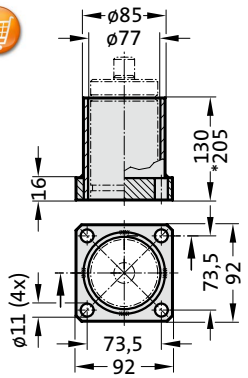

2480.045.01500 2)

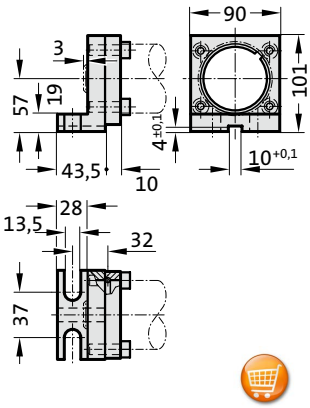

2480.047.01500 2)

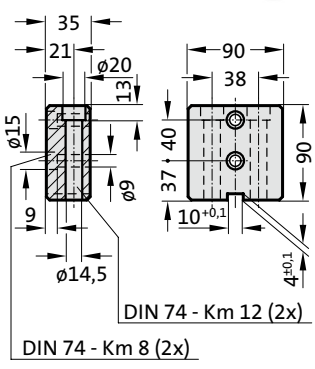

2480.044.03.01500 2)

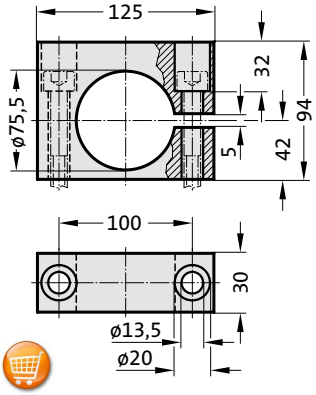

Note:

2) Attention:
The spring force must be absorbed by the stop surface!

3) Not for use with composite connection.

4) Square collar flange, non-rotating, fixing for composite connection.

5) Machine screws with hexagonal socket (compact head recommended)

Gas spring, Standard

Note:

Initial spring force at 150 bar = 1500 daN

Order No for spare parts kit: 2480.12.01500
Order No for spare parts kit: to Renault standard EM24.54.700 2480.12.01500.R
Gas spring to Renault standard EM24.54.700
Order No (example): 2480.12.01500. .R

1) Special stroke lengths
Not for gas springs to Renault Standard EM24.54.700.

Pressure medium: Nitrogen N_2
Max. filling pressure: 150 bar
Min. filling pressure: 25 bar
Working temperature: 0°C to +80°C
Temperature related force increase: ± 0.3%/°C
Max. recommended extensions per minute: approx. 15 to 40 (at 20°C)
Max. piston speed: 1.6 m/s
for 2480. ... .R: 2.0 m/s

2480.12.01500.

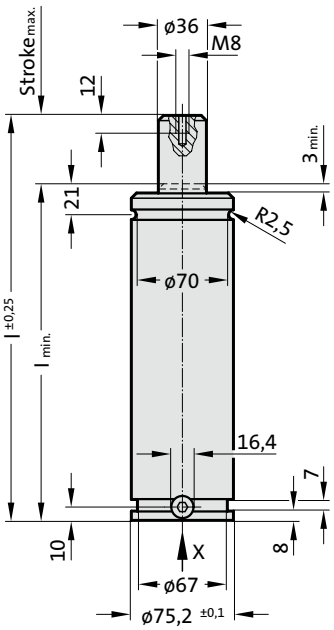

View X - Gas spring

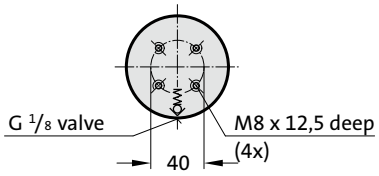



APPROVED PED 97/23/EC | VDI | ISO

S>max | V>max | P>max | Flex Guide™

2480.12.01500.
Gas spring, Standard

Order No		Stroke max.	l min.	l
2480.12.01500.013	1)	12.7	122.3	135
2480.12.01500.025		25	135	160
2480.12.01500.038		38.1	148.1	186.2
2480.12.01500.050		50	160	210
2480.12.01500.063		63.5	173.5	237
2480.12.01500.075	1)	75	185	260
2480.12.01500.080		80	190	270
2480.12.01500.088	1)	87.5	197.5	285
2480.12.01500.100		100	210	310
2480.12.01500.113	1)	112.5	222.5	335
2480.12.01500.125		125	235	360
2480.12.01500.138	1)	137.5	247.5	385
2480.12.01500.150	1)	150	260	410
2480.12.01500.160		160	270	430
2480.12.01500.175	1)	175	285	460
2480.12.01500.200		200	310	510
2480.12.01500.225	1)	225	335	560
2480.12.01500.250		250	360	610
2480.12.01500.275		275	385	660
2480.12.01500.300		300	410	710

Initial spring force
versus charge pressure

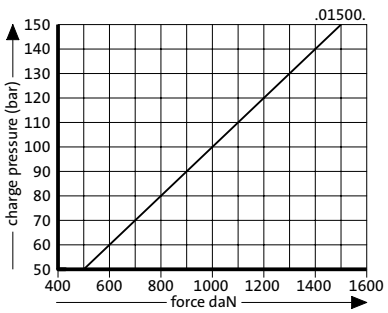

Spring force Diagram displacement versus stroke rise

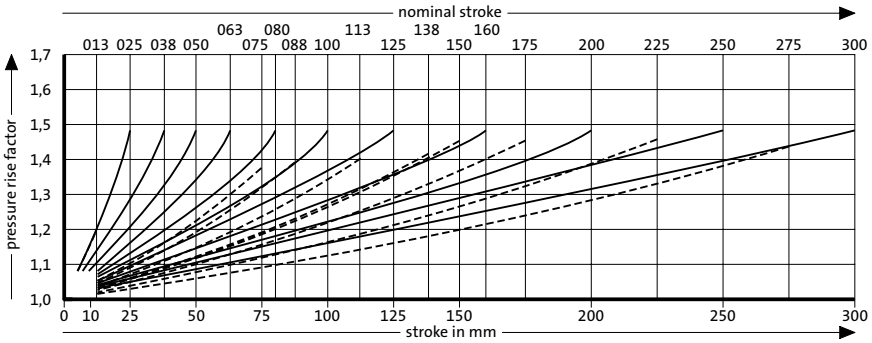

Pressure rise factor accounts for displacement but not external influences!

Gas spring, Standard
Mounting variations

2480.011.03000

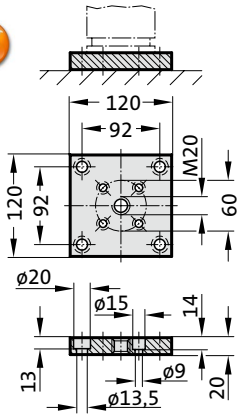

2480.011.03000.2

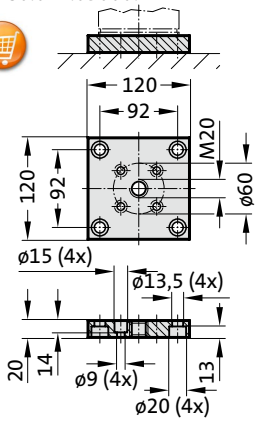

2480.022.03000

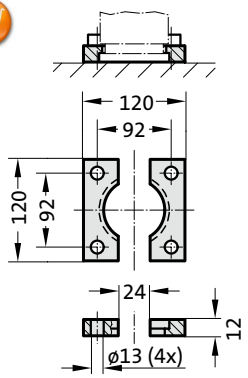

2480.055.03000

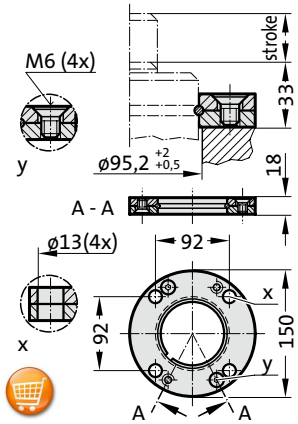

2480.057.03000

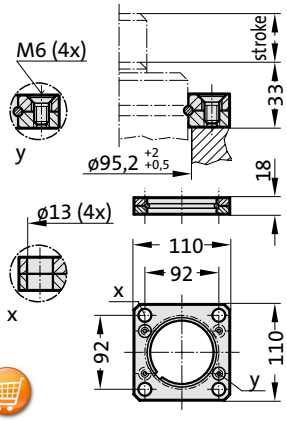

2480.007.03000

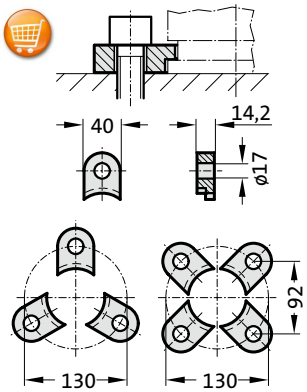

2480.008.03000 [3]

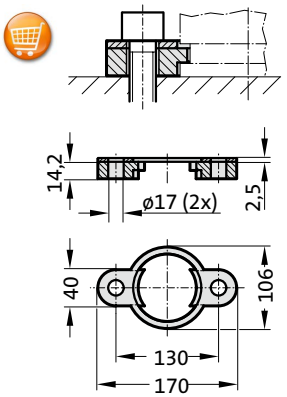

2480.064.03000 [4]

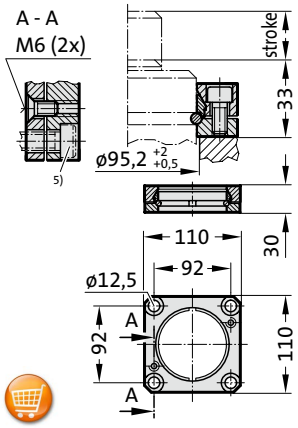

2480.044.03000 [2]

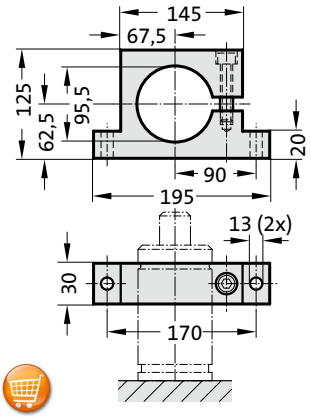

2480.010.03000.140 [3]
2480.010.03000.215* [3]

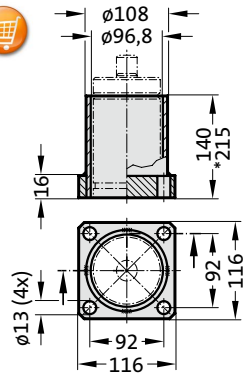

2480.045.03000 [2]

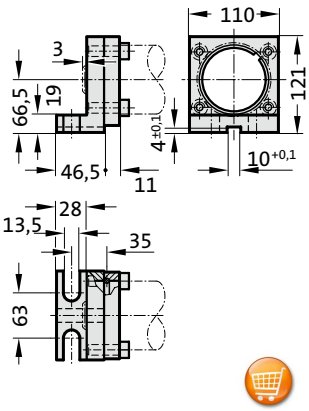

2480.047.03000 [2]

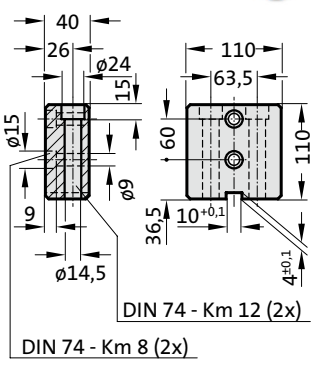

2480.044.03.03000 [2]

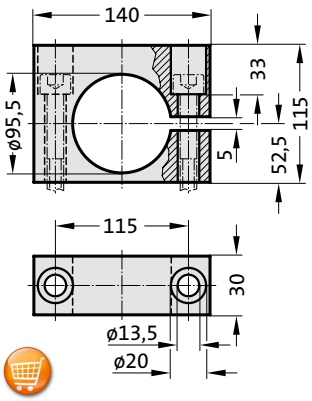

Note:

[2] Attention:
The spring force must be absorbed by the stop surface!

[3] Not for use with composite connection.

[4] Square collar flange, non-rotating, fixing for composite connection.

[5] Machine screws with hexagonal socket (compact head recommended)

Gas spring, Standard

Note:

Initial spring force at 150 bar = 3000 daN

Order No for spare parts kit: 2480.13.03000
Order No for spare parts kit: to Renault standard EM24.54.700 2480.13.03000.R
Gas spring to Renault standard EM24.54.700
Order No (example): 2480.13.03000. .R

1) Special stroke lengths
Not for gas springs to Renault Standard EM24.54.700.

Pressure medium: Nitrogen N_2
Max. filling pressure: 150 bar
Min. filling pressure: 25 bar
Working temperature: 0°C to +80°C
Temperature related force increase: ± 0.3%/°C
Max. recommended extensions per minute: approx. 15 to 40 (at 20°C)
Max. piston speed: 1.6 m/s
for 2480. ... .R: 2.0 m/s

2480.13.03000.

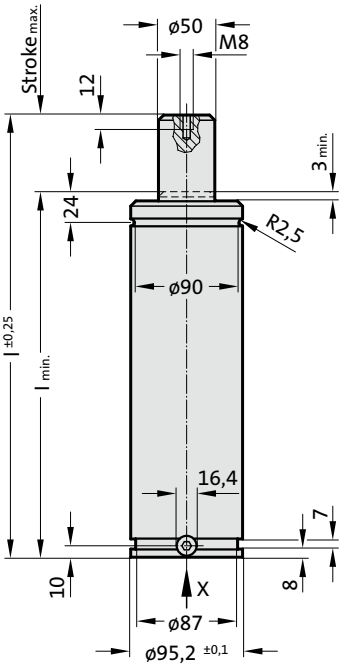

View X - Gas spring

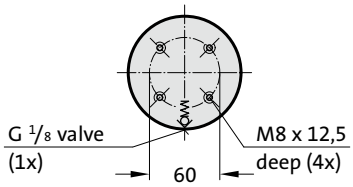



APPROVED PED 97/23/EC | VDI | ISO

S>max | V>max | P>max | Flex Guide™

2480.13.03000.
Gas spring, Standard

Order No		Stroke max.	l min.	l
2480.13.03000.013	1)	12.7	132.3	145
2480.13.03000.025		25	145	170
2480.13.03000.038		38.1	158.1	196.2
2480.13.03000.050		50	170	220
2480.13.03000.063		63.5	183.5	247
2480.13.03000.075	1)	75	195	270
2480.13.03000.080		80	200	280
2480.13.03000.088.1	1)	87.5	207.5	295
2480.13.03000.100		100	220	320
2480.13.03000.113	1)	112.5	232.5	345
2480.13.03000.125		125	245	370
2480.13.03000.138	1)	137.5	257.5	395
2480.13.03000.150	1)	150	270	420
2480.13.03000.160		160	280	440
2480.13.03000.175	1)	175	295	470
2480.13.03000.200		200	320	520
2480.13.03000.225	1)	225	345	570
2480.13.03000.250		250	370	620
2480.13.03000.275	1)	275	395	670
2480.13.03000.300		300	420	720

Initial spring force
versus charge pressure

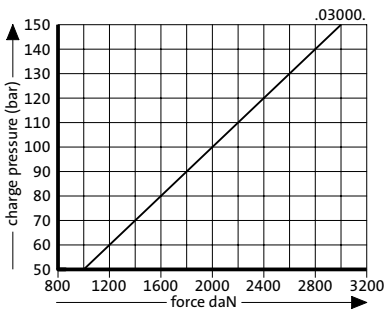

Spring force Diagram displacement versus stroke rise

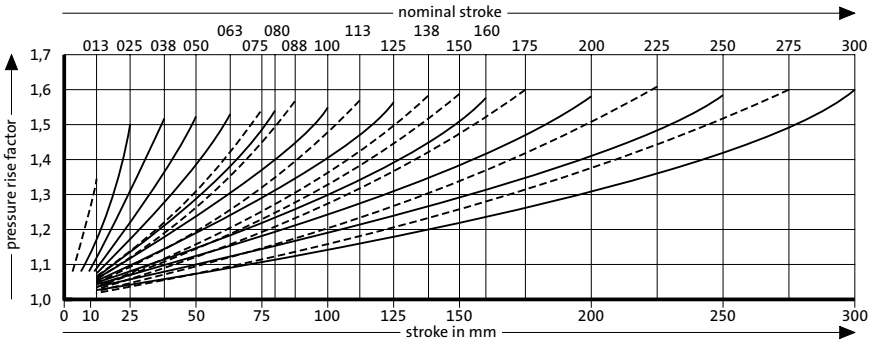

Pressure rise factor accounts for displacement but not external influences!

FIBRO

Gas spring, Standard
Mounting variations

2480.011.05000

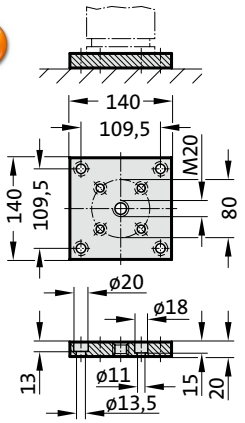

2480.011.05000.2

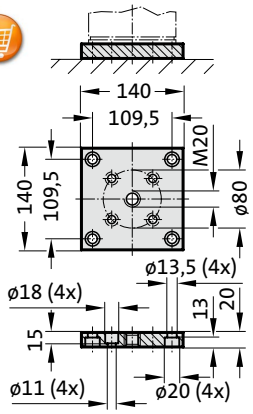

2480.022.05000

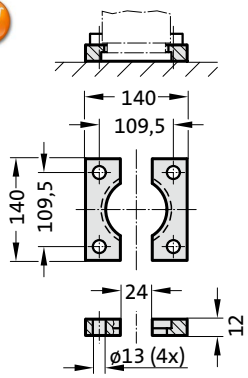

2480.055.05000

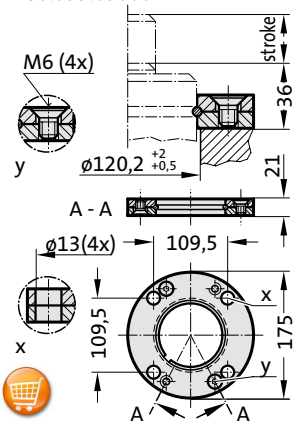

2480.057.05000

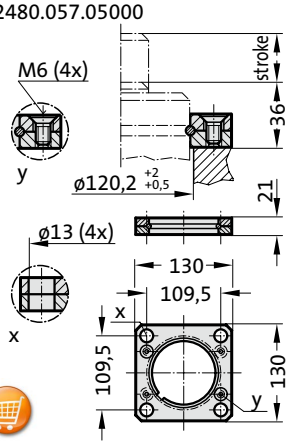

2480.007.05000

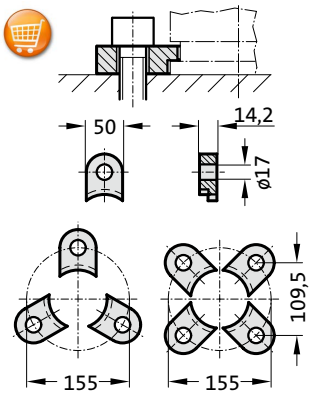

2480.008.05000 3)

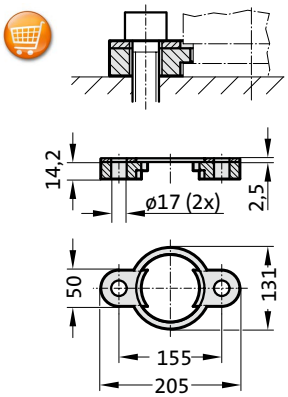

2480.064.05000 4)

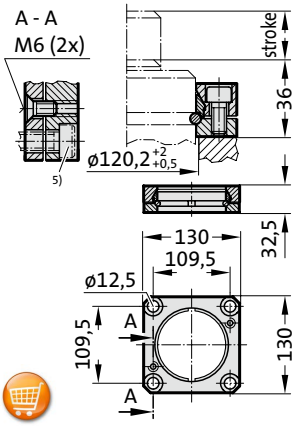

2480.044.05000 2)

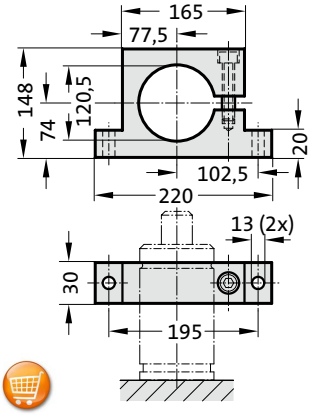

2480.010.05000.160 3)

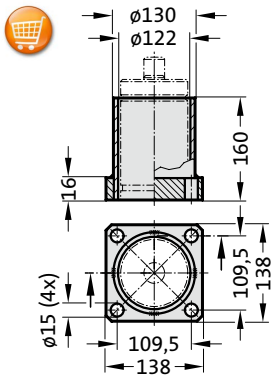

2480.045.05000 2)

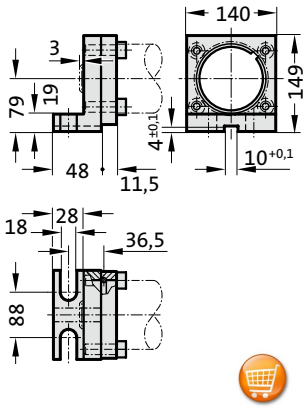

2480.047.05000 2)

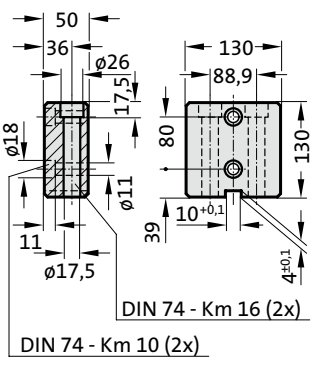

2480.044.03.05000 2)

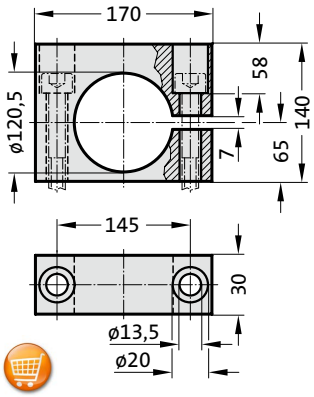

Note:

2) Attention:
The spring force must be absorbed by the stop surface!

3) Not for use with composite connection.

4) Square collar flange, non-rotating, fixing for composite connection.

5) Machine screws with hexagonal socket (compact head recommended)

Gas spring, Standard

Note:

Initial spring force at 150 bar = 5000 daN

Order No for spare parts kit: 2480.13.05000
Order No for spare parts kit: to Renault standard EM24.54.700 2480.13.05000.R
Gas spring to Renault standard EM24.54.700
Order No (example): 2480.13.05000. .R

1) Special stroke lengths
Not for gas springs to Renault Standard EM24.54.700.

Pressure medium: Nitrogen N_2
Max. filling pressure: 150 bar
Min. filling pressure: 25 bar
Working temperature: 0°C to +80°C
Temperature related force increase: ± 0.3%/°C
Max. recommended extensions per minute: approx. 15 to 40 (at 20°C)
Max. piston speed: 1.6 m/s
for 2480. ... .R: 2.0 m/s

2480.13.05000.

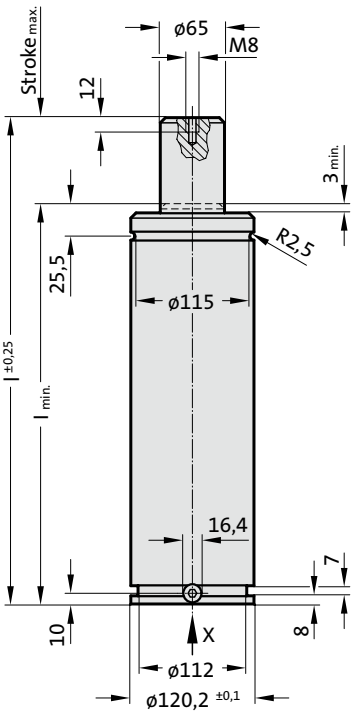

View X - Gas spring

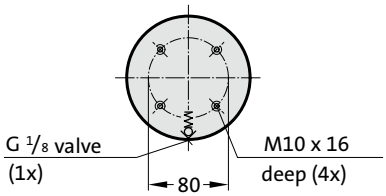



APPROVED PED 97/23/EC | VDI | ISO

S>max | V>max | P>max | Flex Guide™

2480.13.05000.
Gas spring, Standard

Order No		Stroke$_{max.}$	$l_{min.}$	l
2480.13.05000.025		25	165	190
2480.13.05000.038		38.1	178.1	216.2
2480.13.05000.050		50	190	240
2480.13.05000.063		63.5	203.5	267
2480.13.05000.075	1)	75	215	290
2480.13.05000.080		80	220	300
2480.13.05000.088	1)	87.5	227.5	315
2480.13.05000.100		100	240	340
2480.13.05000.113	1)	112.5	252.5	365
2480.13.05000.125		125	265	390
2480.13.05000.138	1)	137.5	277.5	415
2480.13.05000.150	1)	150	290	440
2480.13.05000.160		160	300	460
2480.13.05000.175	1)	175	315	490
2480.13.05000.200		200	340	540
2480.13.05000.225	1)	225	365	590
2480.13.05000.250		250	390	640
2480.13.05000.275	1)	275	415	690
2480.13.05000.300		300	440	740

Initial spring force
versus charge pressure

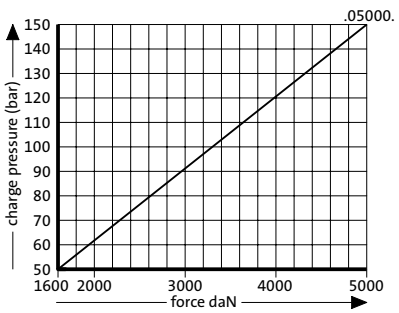

Spring force Diagram displacement versus stroke rise

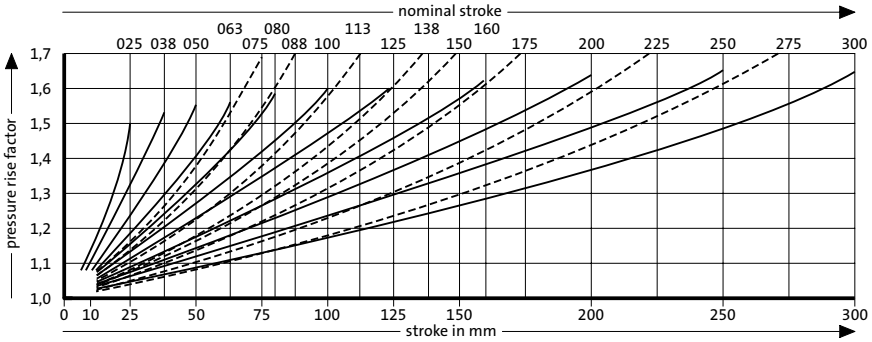

Pressure rise factor accounts for displacement but not external influences!

FIBRO

Gas spring, Standard
Mounting variations

2480.011.07500

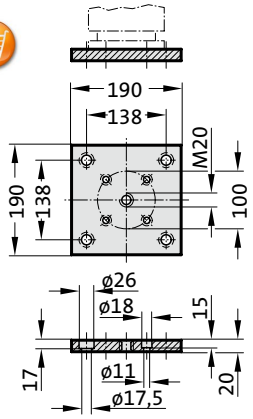

2480.011.07500.2

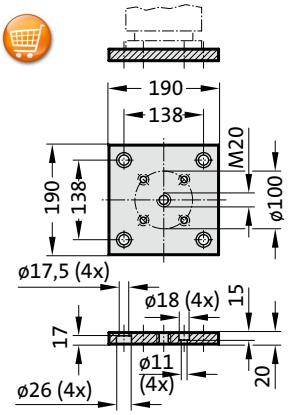

2480.022.07500

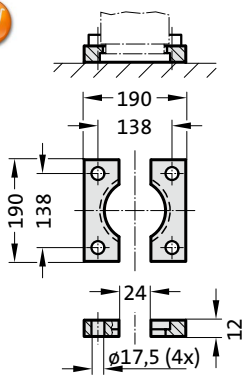

2480.055.07500

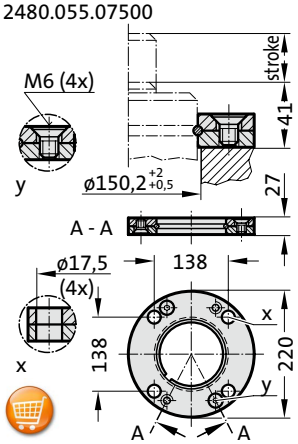

2480.057.07500

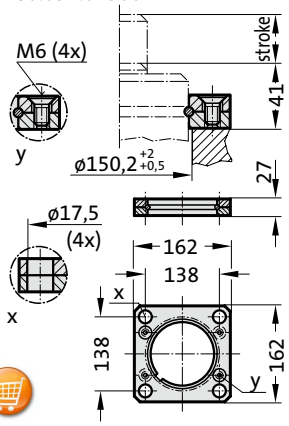

2480.007.07500

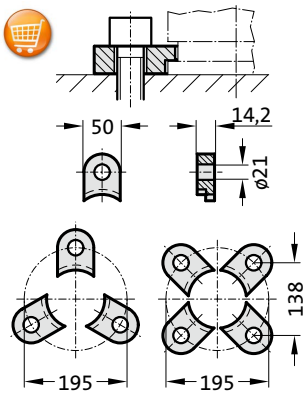

2480.008.07500 [3]

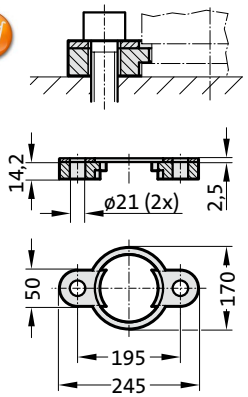

2480.064.07500 [4]

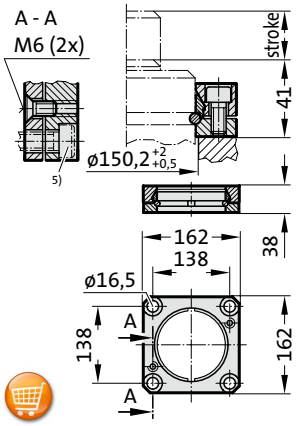

2480.044.07500 [2]

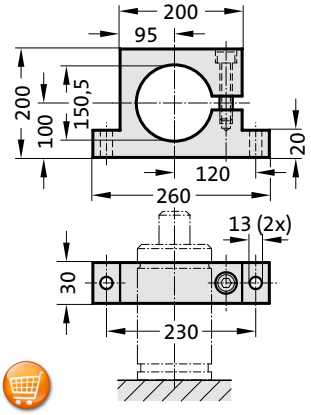

2480.044.03.07500 [2]

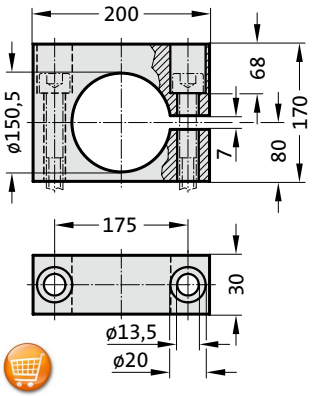

Note:

[2] Attention:
The spring force must be absorbed by the stop surface.

[3] Note:
Not for use with composite connection.

[4] Square collar flange, non-rotating, fixing for composite connection.

[5] Machine screws with hexa-gonal socket (compact head recommended).

Gas spring, Standard

Note:

Initial spring force at 150 bar = 7500 daN

Order No for spare parts kit: 2480.13.07500
Order No for spare parts kit: to Renault standard EM24.54.700 2480.13.07500.R
Gas spring to Renault standard EM24.54.700
Order No (example): 2480.13.07500. .R

1) Special stroke lengths
Not for gas springs to Renault Standard EM24.54.700.

Pressure medium: Nitrogen N_2
Max. filling pressure: 150 bar
Min. filling pressure: 25 bar
Working temperature: 0°C to +80°C
Temperature related force increase: ± 0.3%/°C
Max. recommended extensions per minute: approx. 15 to 40 (at 20°C)
Max. piston speed: 1.6 m/s
for 2480. ... .R: 2.0 m/s

2480.13.07500.

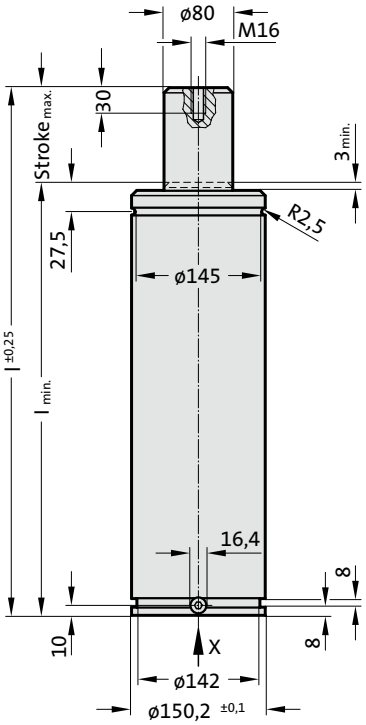

View X - Gas spring

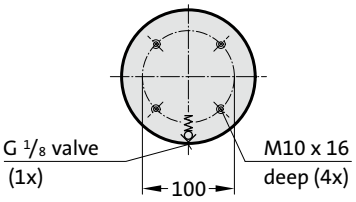



APPROVED PED 97/23/EC | VDI | ISO

S>max | V>max | P>max | Flex Guide™

2480.13.07500.
Gas spring, Standard

Order No		Stroke max.	l min.	l
2480.13.07500.025		25	180	205
2480.13.07500.038		38.1	193.1	231.2
2480.13.07500.050		50	205	255
2480.13.07500.063		63.5	218.5	282
2480.13.07500.075	1)	75	230	305
2480.13.07500.080		80	235	315
2480.13.07500.088	1)	87.5	242.5	330
2480.13.07500.100		100	255	355
2480.13.07500.113	1)	112.5	267.5	380
2480.13.07500.125		125	280	405
2480.13.07500.138	1)	137.5	292.5	430
2480.13.07500.150	1)	150	305	455
2480.13.07500.160		160	315	475
2480.13.07500.175	1)	175	330	505
2480.13.07500.200		200	355	555
2480.13.07500.225	1)	225	380	605
2480.13.07500.250		250	405	655
2480.13.07500.275	1)	275	430	705
2480.13.07500.300		300	455	755

Initial spring force
versus charge pressure

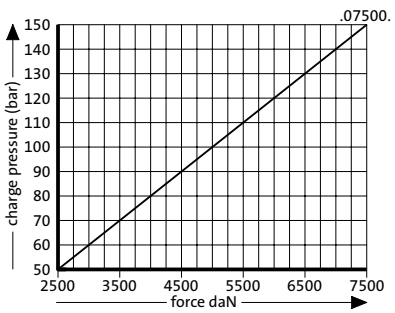

Spring force Diagram displacement versus stroke rise

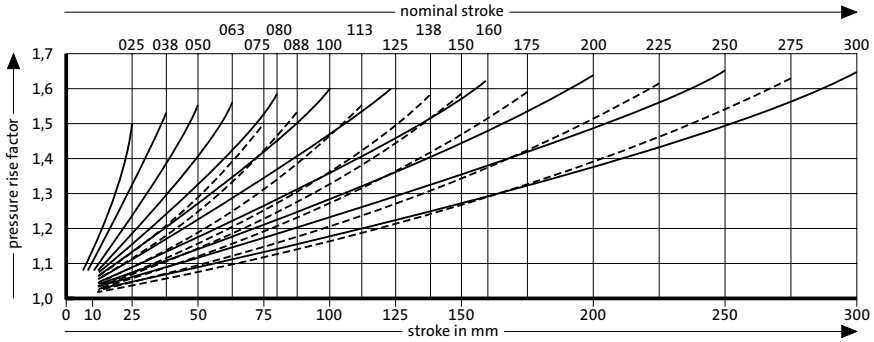

Pressure rise factor accounts for displacement but not external influences!

Gas spring, Standard
Mounting variations

2480.011.10000.2

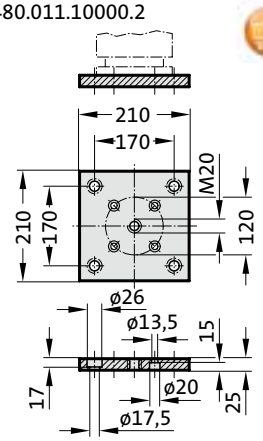

2480.011.10000

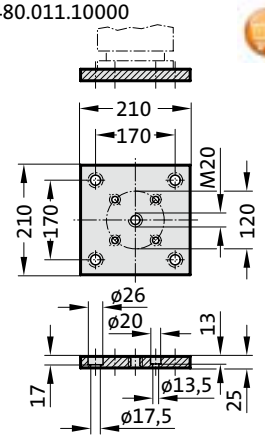

2480.022.10000

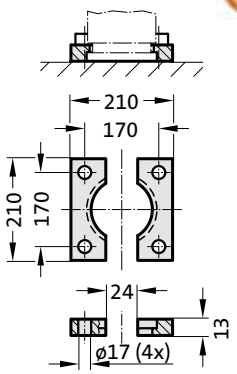

2480.057.10000

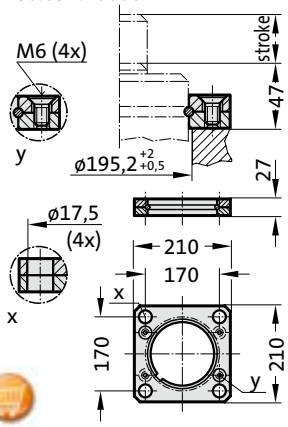

2480.007.10000

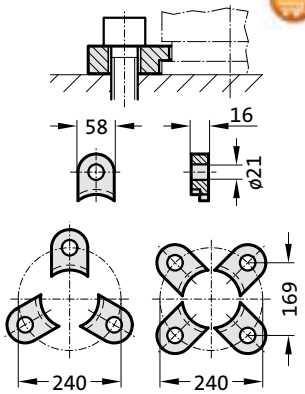

Gas spring, Standard

Note:
Initial spring force at 150 bar = 10000 daN

Order No for spare parts kit: 2480.12.10000
Gas spring to Renault standard EM24.54.700
Order No (example): 2480.12.10000. .R

Pressure medium: Nitrogen N_2
Max. filling pressure: 150 bar
Min. filling pressure: 25 bar
Working temperature: 0°C to +80°C
Temperature related force increase: ± 0.3%/°C
Max. recommended extensions per minute: approx. 15 to 40 (at 20°C)
Max. piston speed: 1.6 m/s

2480.12.10000.

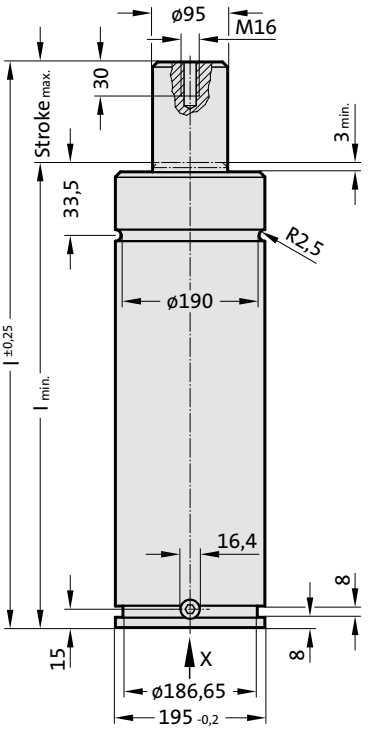

View X - Gas spring

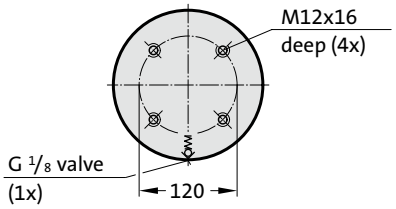



APPROVED PED 97/23/EC | VDI | ISO

S>max | V>max | P>max | Flex Guide™

2480.12.10000.
Gas spring, Standard

Order No	Stroke max.	l min.	l
2480.12.10000.025	25	185	210
2480.12.10000.038	38.1	198.1	236.2
2480.12.10000.050	50	210	260
2480.12.10000.063	63.5	223.5	287
2480.12.10000.080	80	240	320
2480.12.10000.100	100	260	360
2480.12.10000.125	125	285	410
2480.12.10000.160	160	320	480
2480.12.10000.200	200	360	560
2480.12.10000.250	250	410	660
2480.12.10000.300	300	460	760

Initial spring force
versus charge pressure

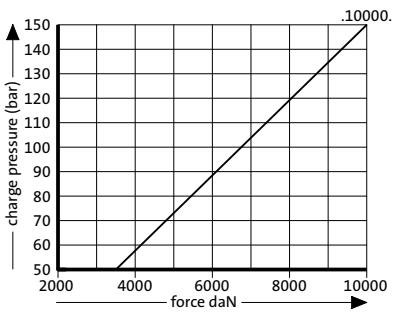

Spring force Diagram displacement versus stroke rise

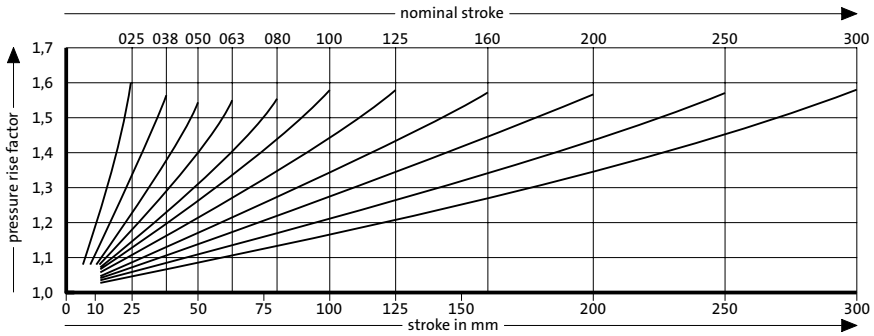

Pressure rise factor accounts for displacement but not external influences!



Gas springs
HEAVY DUTY

FIBRO

Gas Spring, HEAVY DUTY
Mounting variations

2480.011.00500.2

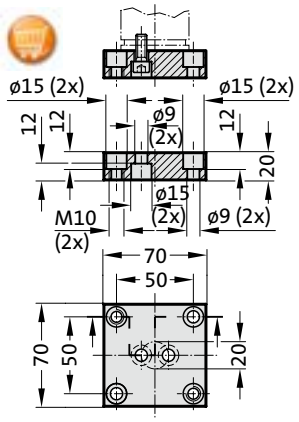

2480.011.00500

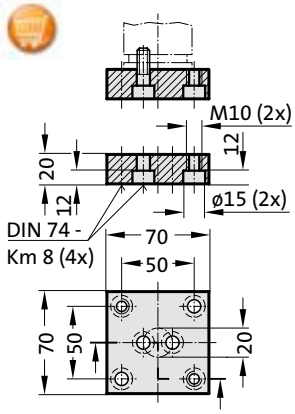

2480.011.00500.1

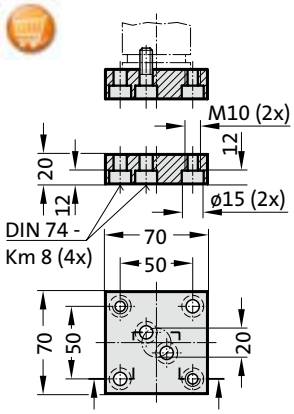

2480.022.00500

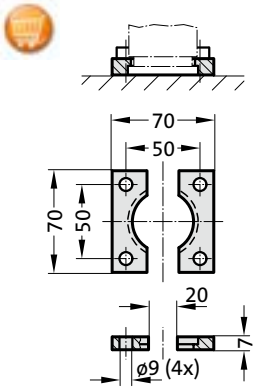

2480.055.00500

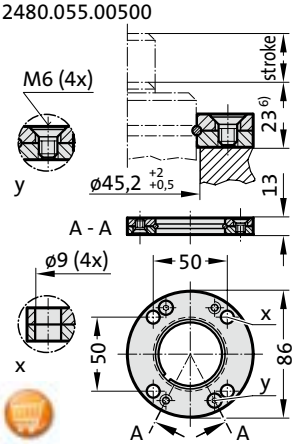

2480.057.00500

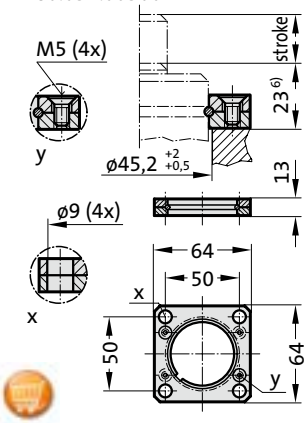

2480.007.00500

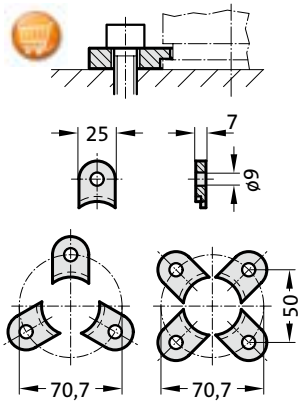

2480.008.00500 3)

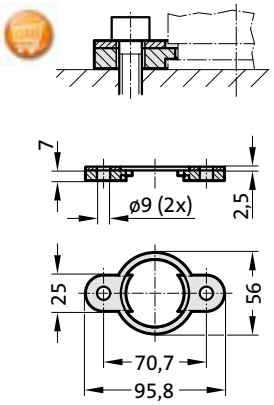

2480.044.03.00500 2)

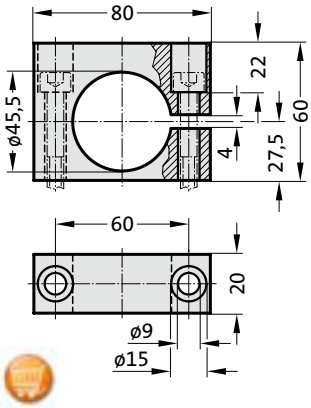

2480.044.00500 2)

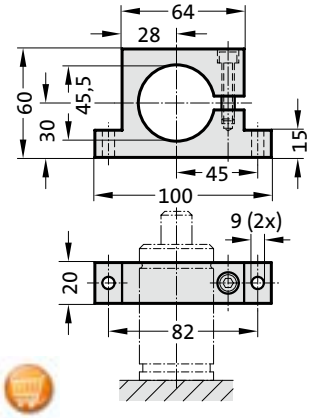

2480.010.00500.095 3)

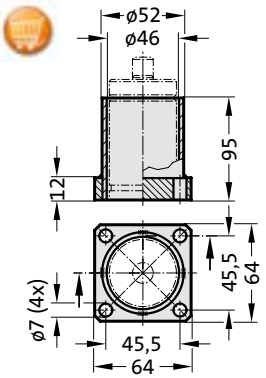

2480.064.00500 4)

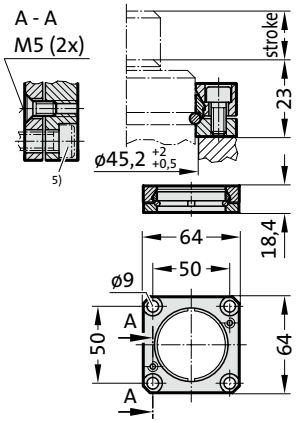

Note:

2) Attention:
The spring force must be absorbed by the stop surface!

3) Not for use with composite connection.

4) Square collar flange, non-rotating, fixing for composite connection.

5) Machine screws with hexagonal socket (compact head recommended)

6) Installation height increased from 22 mm to 23 mm according to VDI 3003.

Gas spring HEAVY DUTY

Note:

Initial spring force at 150 bar = 740 daN

Order No for spare parts kit: 2488.13.00750

Pressure medium: Nitrogen N_2
Max. filling pressure: 150 bar
Min. filling pressure: 25 bar
Working temperature: 0°C to +80°C
Temperature related force increase: ± 0.3%/°C
Max. recommended extensions per minute: approx. 15 to 100 (at 20°C)
Max. piston speed: 1.6 m/s

2488.13.00750.

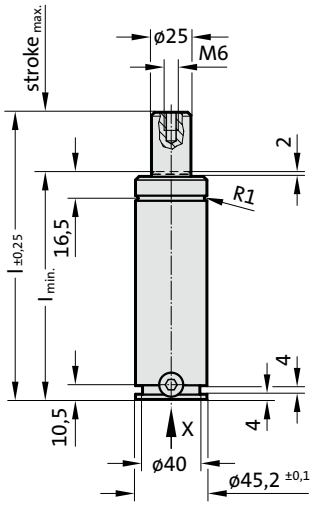

View X

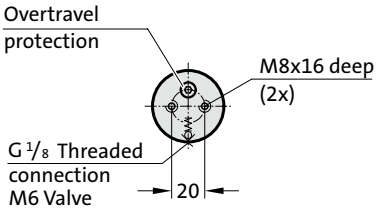



APPROVED PED 97/23/EC

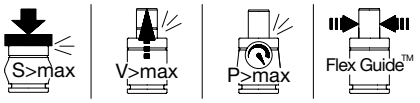

2488.13.00750.
Gas spring HEAVY DUTY

Order No	Stroke max.	l min.	l
2488.13.00750.013	13	98	111
2488.13.00750.025	25	110	135
2488.13.00750.038	38	123	161
2488.13.00750.050	50	135	185
2488.13.00750.063	63	148	211
2488.13.00750.075	75	160	235
2488.13.00750.080	80	165	245
2488.13.00750.100	100	185	285
2488.13.00750.125	125	210	335
2488.13.00750.150	150	235	385
2488.13.00750.160	160	245	405
2488.13.00750.175	175	260	435
2488.13.00750.200	200	285	485

Initial spring force
versus charge pressure

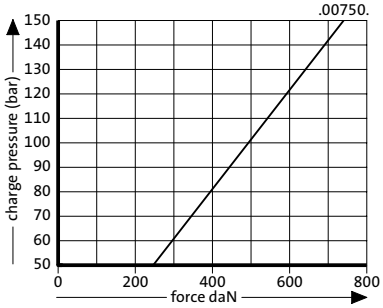

Spring force Diagram displacement versus stroke rise

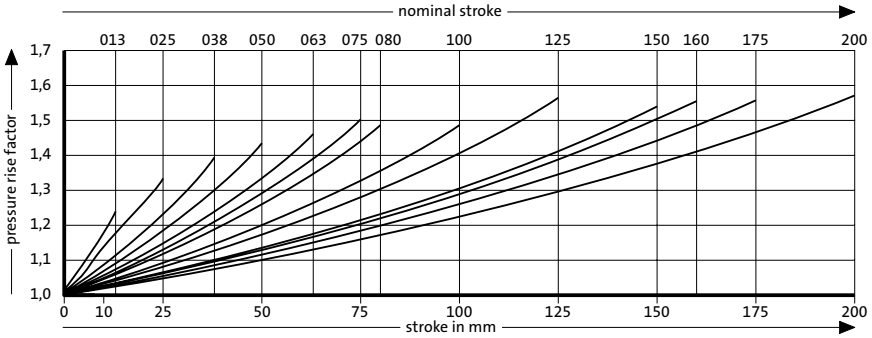

Pressure rise factor accounts for displacement but not external influences!

FIBRO

Gas spring HEAVY DUTY
Mounting variations

2480.011.00750.3

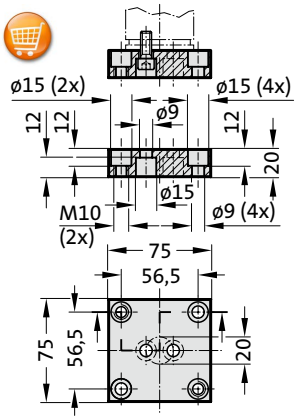

2480.011.00750

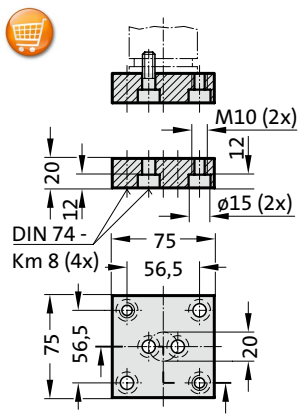

2480.011.00750.1

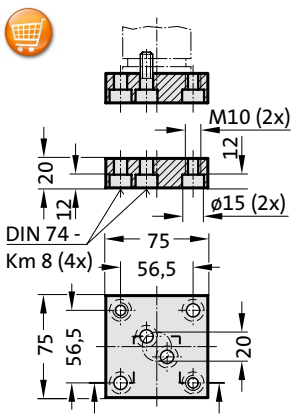

2480.022.00750

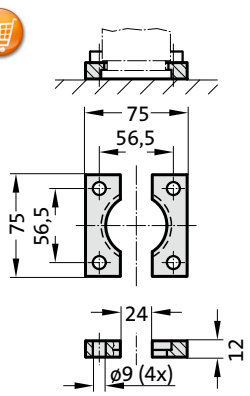

2480.055.00750

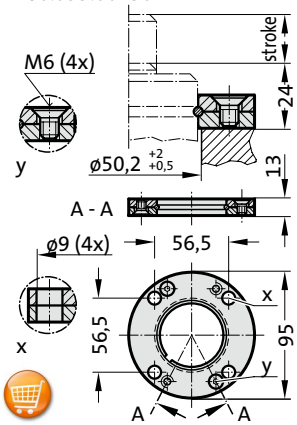

2480.057.00750

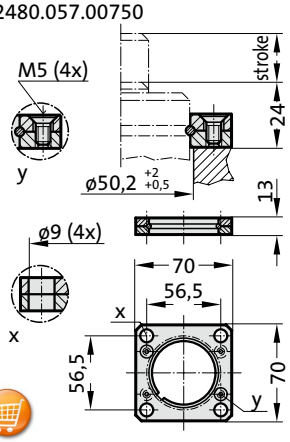

2480.007.00750

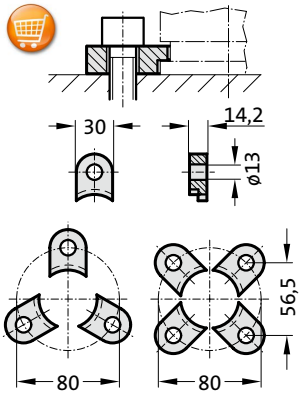

2480.008.00750 3)

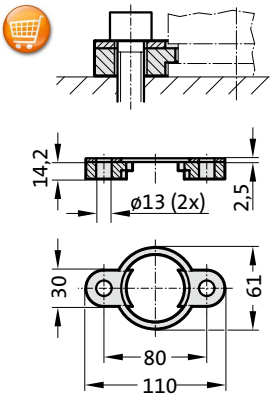

2480.064.00750 4)

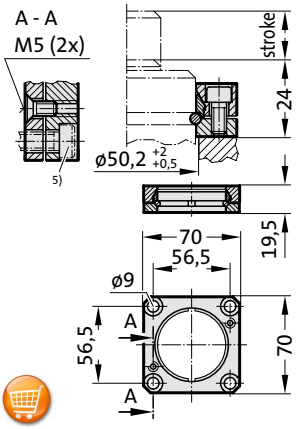

2480.044.00750 2)

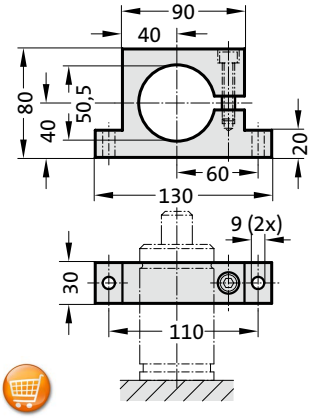

2480.010.00750.115 3)
2480.010.00750.190* 3)

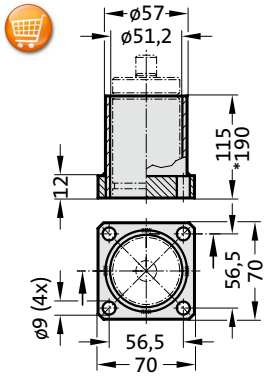

2480.045.00750 2)

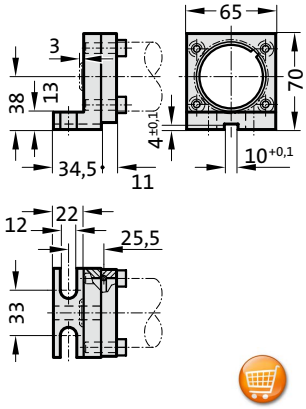

2480.047.00750 2)

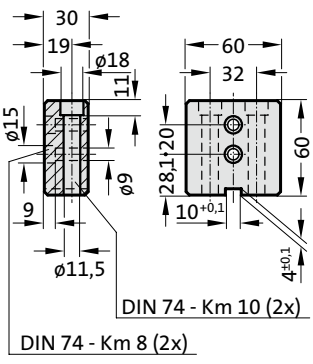

2480.044.03.00750 2)

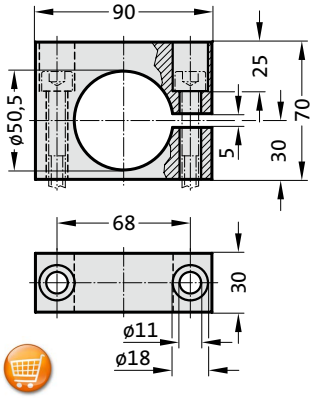

Note:

2) Attention:
The spring force must be absorbed by the stop surface!

3) Not for use with composite connection.

4) Square collar flange, non-rotating, fixing for composite connection.

5) Machine screws with hexagonal socket (compact head recommended)

Gas spring HEAVY DUTY

Note:
Initial spring force at 150 bar = 920 daN

Order No for spare parts kit: 2488.13.01000

Pressure medium: Nitrogen N_2
Max. filling pressure: 150 bar
Min. filling pressure: 25 bar
Working temperature: 0°C to +80°C
Temperature related force increase: ± 0.3%/°C
Max. recommended extensions per minute: approx. 15 to 100 (at 20°C)
Max. piston speed: 1.6 m/s

2488.13.01000.

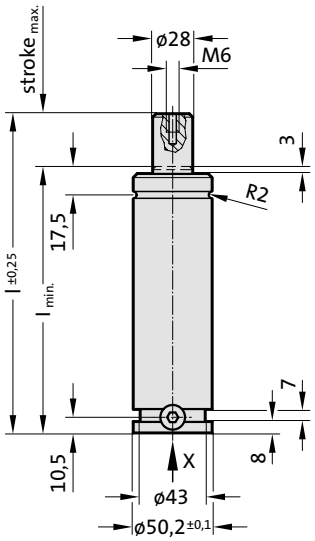

View X

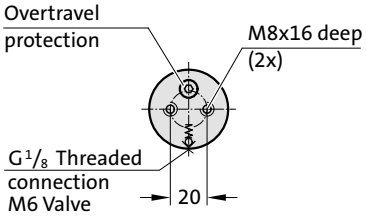



APPROVED PED 97/23/EC | VDI | ISO

S>max | V>max | P>max | Flex Guide™

2488.13.01000.
Gas spring HEAVY DUTY

Order No	Stroke max.	l min.	l
2488.13.01000.013	13	108	121
2488.13.01000.025	25	120	145
2488.13.01000.038	38	133	171
2488.13.01000.050	50	145	195
2488.13.01000.063	63	158	221
2488.13.01000.075	75	170	245
2488.13.01000.080	80	175	255
2488.13.01000.100	100	195	295
2488.13.01000.125	125	220	345
2488.13.01000.150	150	245	395
2488.13.01000.160	160	255	415
2488.13.01000.175	175	270	445
2488.13.01000.200	200	295	495
2488.13.01000.250	250	345	595
2488.13.01000.300	300	395	695

Initial spring force
versus charge pressure

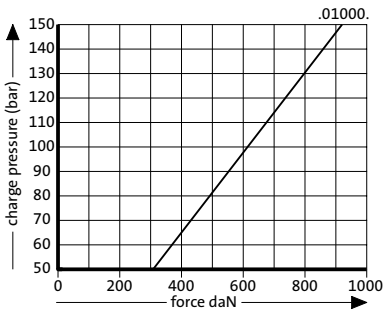

Spring force Diagram displacement versus stroke rise

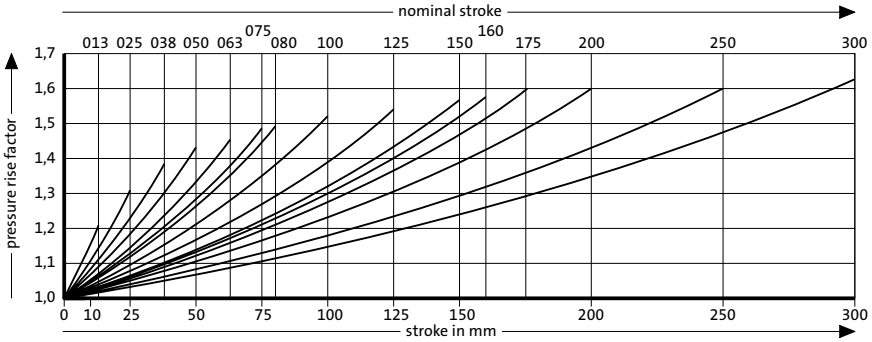

Pressure rise factor accounts for displacement but not external influences!

FIBRO

Gas spring HEAVY DUTY
Mounting variations

2480.011.01000

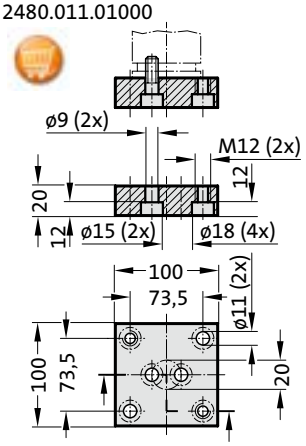

2480.011.01000.2

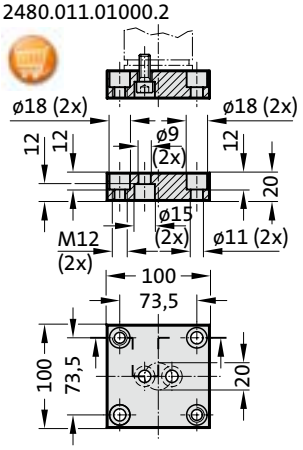

2480.022.01000

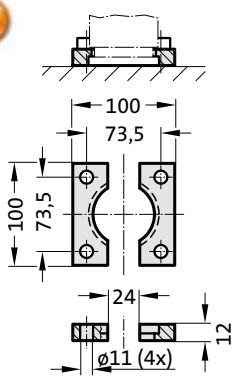

2480.064.01000 [4]

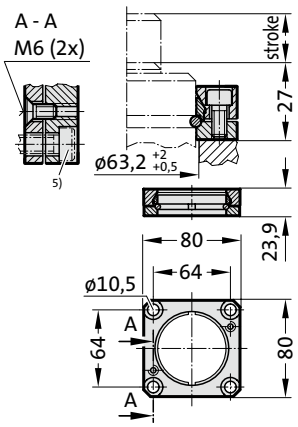

2480.057.01000

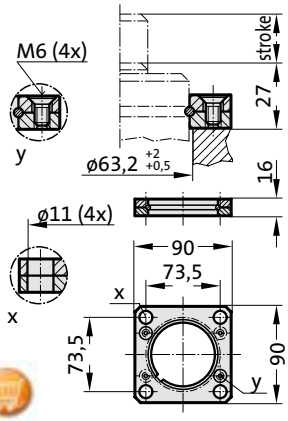

2480.057.03.01000

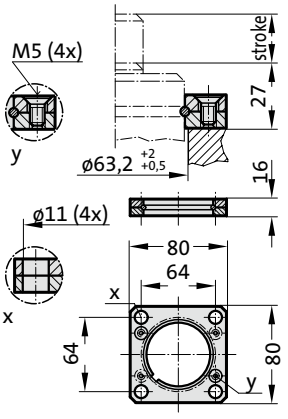

2480.044.03.01000 [2]

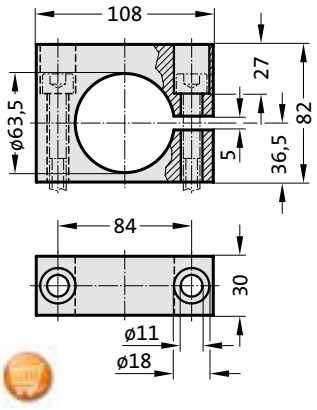

2480.007.01000

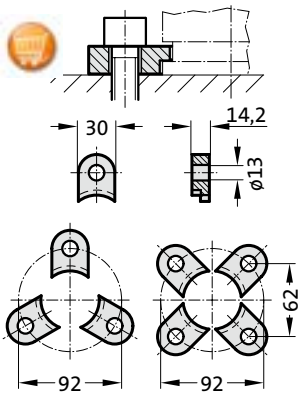

Note:

[2] Attention:
The spring force must be absorbed by the stop surface!

[4] Square collar flange, non-rotating, fixing for composite connection.

[5] Machine screws with hexagonal socket (compact head recommended)

Gas spring HEAVY DUTY

Note:

Initial spring force at 150 bar = 1500 daN

Order No for spare parts kit: 2488.13.01500

Pressure medium: Nitrogen N_2
Max. filling pressure: 150 bar
Min. filling pressure: 25 bar
Working temperature: 0°C to +80°C
Temperature related force increase: ± 0.3%/°C
Max. recommended extensions per minute: approx. 15 to 100 (at 20°C)
Max. piston speed: 1.6 m/s

2488.13.01500.

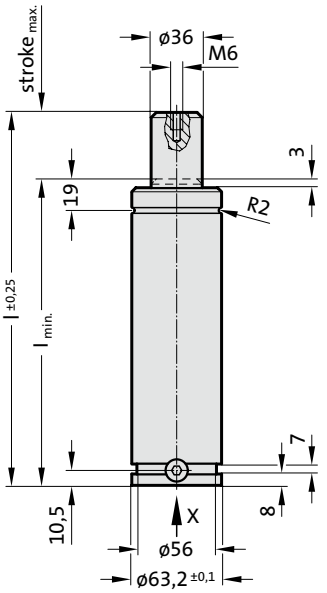

View X

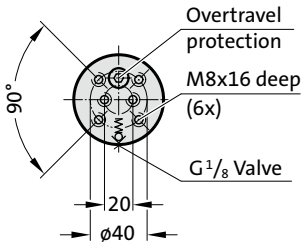



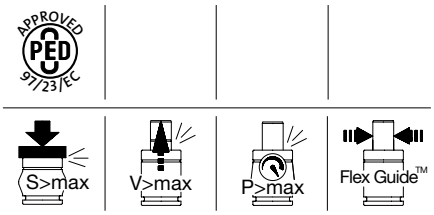

2488.13.01500.
Gas spring HEAVY DUTY

Order No	Stroke$_{max.}$	$l_{min.}$	l
2488.13.01500.013	13	108	121
2488.13.01500.025	25	120	145
2488.13.01500.038	38	133	171
2488.13.01500.050	50	145	195
2488.13.01500.063	63	158	221
2488.13.01500.075	75	170	245
2488.13.01500.080	80	175	255
2488.13.01500.100	100	195	295
2488.13.01500.125	125	220	345
2488.13.01500.150	150	245	395
2488.13.01500.160	160	255	415
2488.13.01500.175	175	270	445
2488.13.01500.200	200	295	495
2488.13.01500.250	250	345	595
2488.13.01500.300	300	395	695

Initial spring force
versus charge pressure

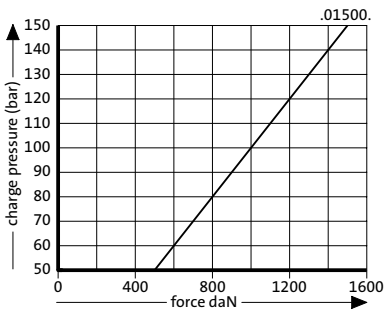

Spring force Diagram displacement versus stroke rise

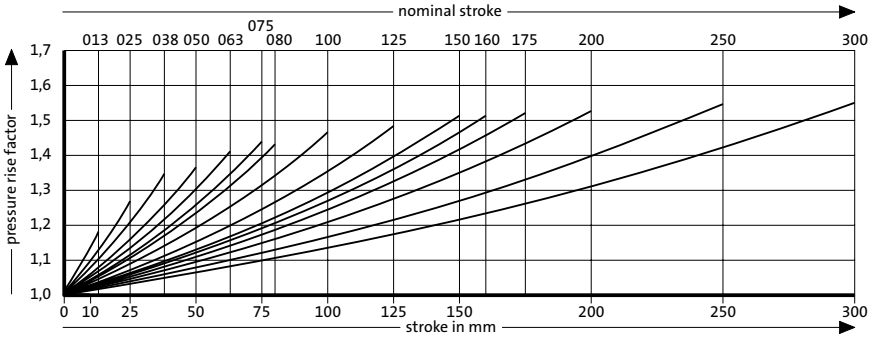

Pressure rise factor accounts for displacement but not external influences!

FIBRO

Gas spring HEAVY DUTY
Mounting variations

2480.011.01500

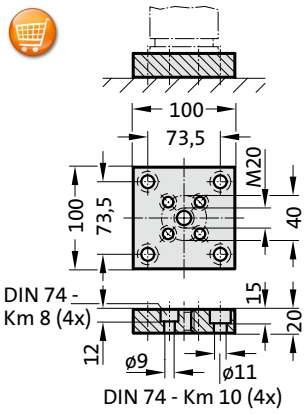

2480.011.01500.2

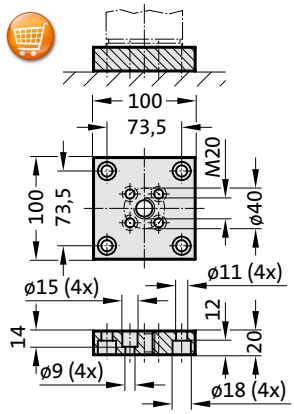

2480.022.01500

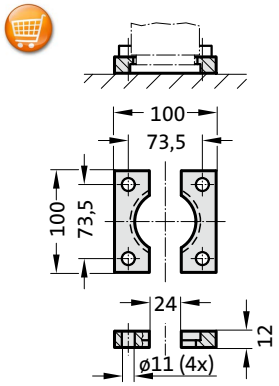

2480.055.01500

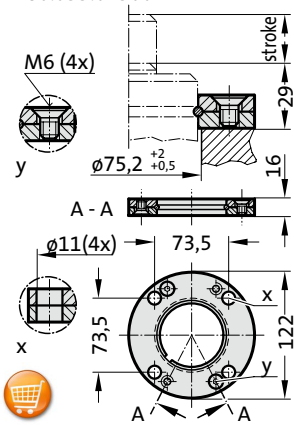

2480.057.01500

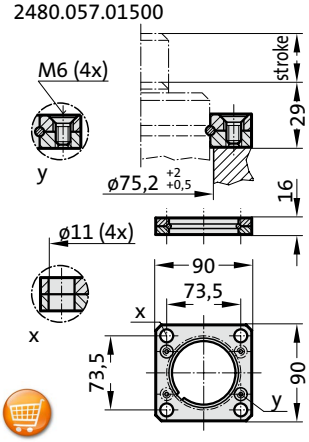

2480.007.01500

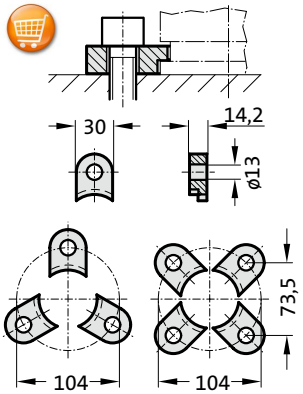

2480.008.01500 3)

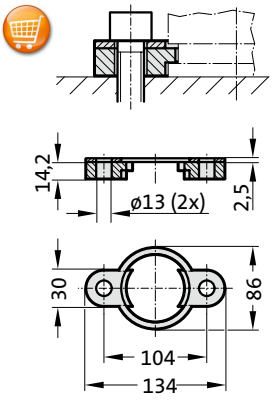

2480.064.01500 4)

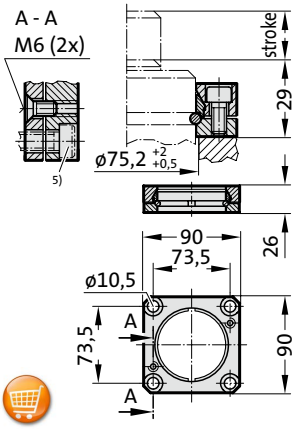

2480.044.01500 2)

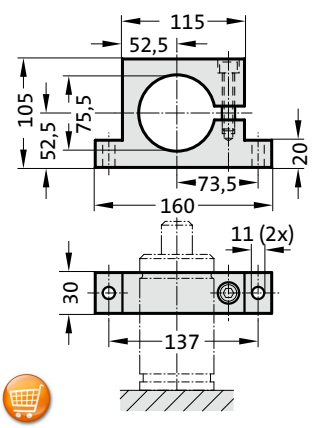

2480.010.01500.130 3)
2480.010.01500.205* 3)

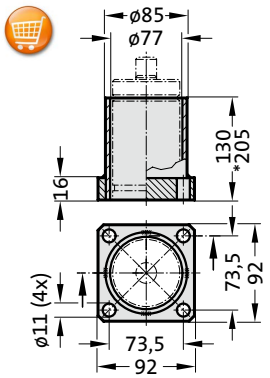

2480.045.01500 2)

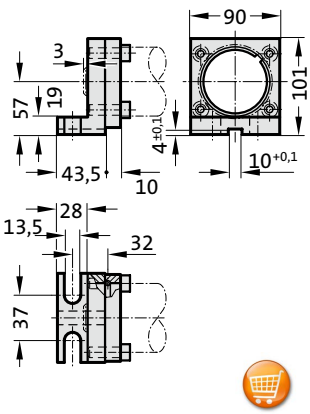

2480.047.01500 2)

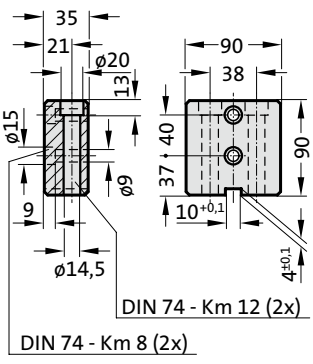

2480.044.03.01500 2)

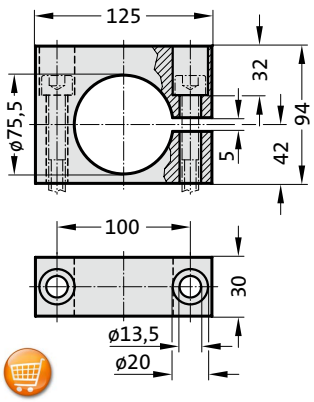

Note:

2) Attention:
The spring force must be absorbed by the stop surface!

3) Not for use with composite connection.

4) Square collar flange, non-rotating, fixing for composite connection.

5) Machine screws with hexagonal socket (compact head recommended)

Gas spring HEAVY DUTY

Note:

Initial spring force at 150 bar = 2400 daN

Order No for spare parts kit: 2488.13.02400

Pressure medium: Nitrogen N_2
Max. filling pressure: 150 bar
Min. filling pressure: 25 bar
Working temperature: 0°C to +80°C
Temperature related force increase: ± 0.3%/°C
Max. recommended extensions per minute: approx. 15 to 100 (at 20°C)
Max. piston speed: 1.6 m/s

2488.13.02400.

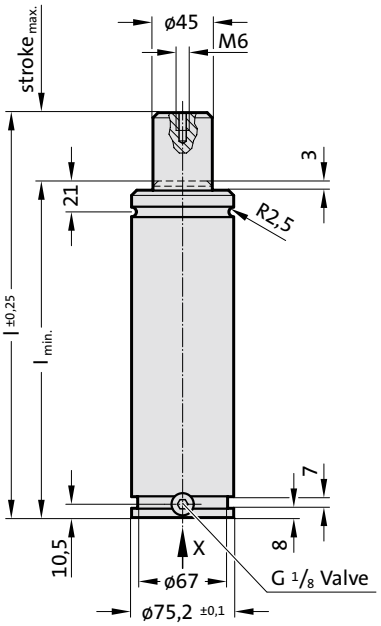

View X

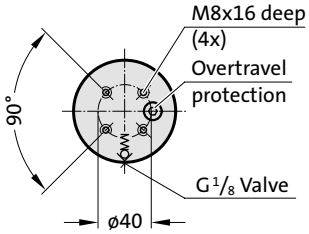



APPROVED PED 97/23/EC | VDI | ISO

S>max | V>max | P>max | Flex Guide™

2488.13.02400.
Gas spring HEAVY DUTY

Order No	Stroke$_{max.}$	$l_{min.}$	l
2488.13.02400.025	25	135	160
2488.13.02400.038	38	148	186
2488.13.02400.050	50	160	210
2488.13.02400.063	63	173	236
2488.13.02400.075	75	185	260
2488.13.02400.080	80	190	270
2488.13.02400.100	100	210	310
2488.13.02400.125	125	235	360
2488.13.02400.150	150	260	410
2488.13.02400.160	160	270	430
2488.13.02400.175	175	285	460
2488.13.02400.200	200	310	510
2488.13.02400.250	250	360	610
2488.13.02400.300	300	410	710

Initial spring force
versus charge pressure

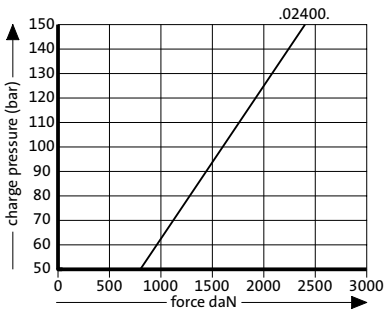

Spring force Diagram displacement versus stroke rise

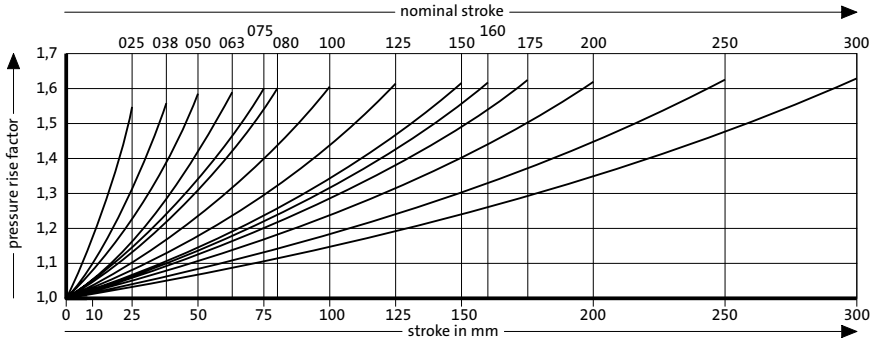

Pressure rise factor accounts for displacement but not external influences!

FIBRO

Gas spring HEAVY DUTY
Mounting variations

2480.011.03000

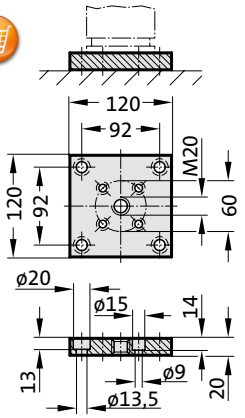

2480.011.03000.2

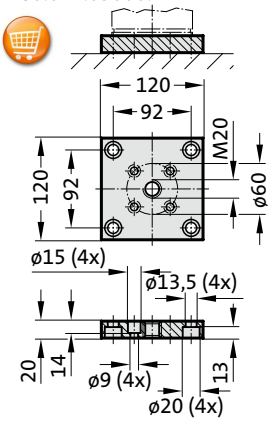

2480.022.03000

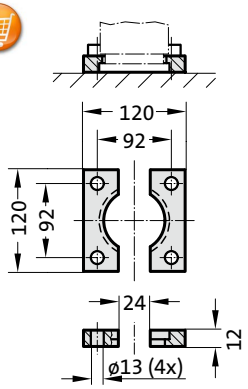

2480.055.03000

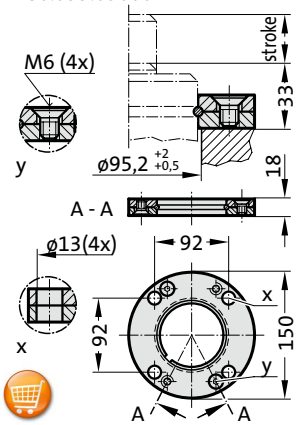

2480.057.03000

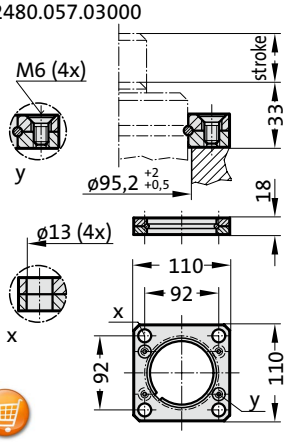

2480.007.03000

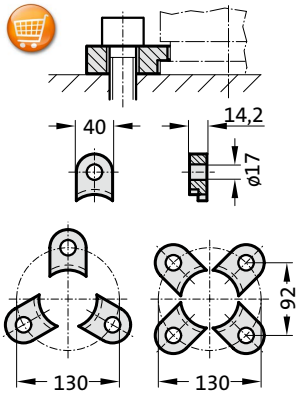

2480.008.03000 [3]

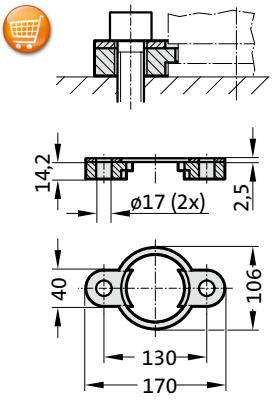

2480.064.03000 [4]

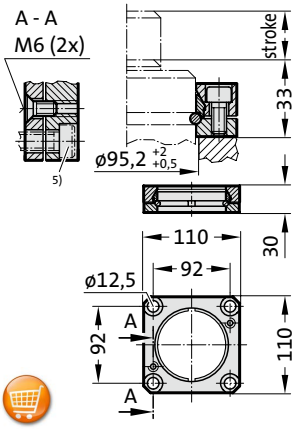

2480.044.03000 [2]

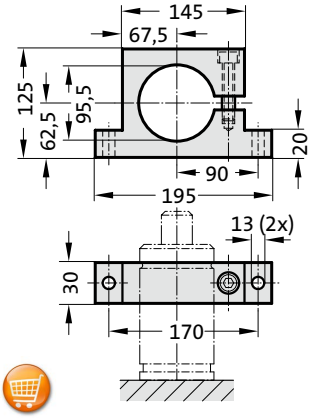

2480.010.03000.140 [3]
2480.010.03000.215* [3]

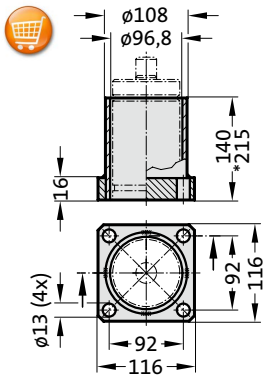

2480.045.03000 [2]

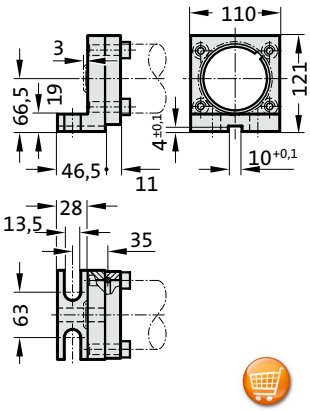

2480.047.03000 [2]

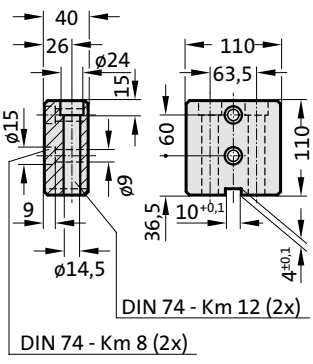

2480.044.03.03000 [2]

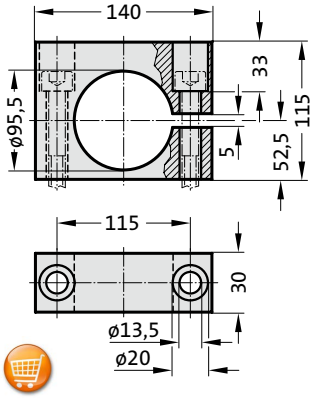

Note:

[2] Attention:
The spring force must be absorbed by the stop surface!

[3] Not for use with composite connection.

[4] Square collar flange, non-rotating, fixing for composite connection.

[5] Machine screws with hexagonal socket (compact head recommended)

Gas spring HEAVY DUTY

Note:

Initial spring force at 150 bar = 4200 daN

Order No for spare parts kit: 2488.13.04200

Pressure medium: Nitrogen N_2
Max. filling pressure: 150 bar
Min. filling pressure: 25 bar
Working temperature: 0°C to +80°C
Temperature related force increase: ± 0.3%/°C
Max. recommended extensions per minute: approx. 15 to 100 (at 20°C)
Max. piston speed: 1.6 m/s

2488.13.04200.

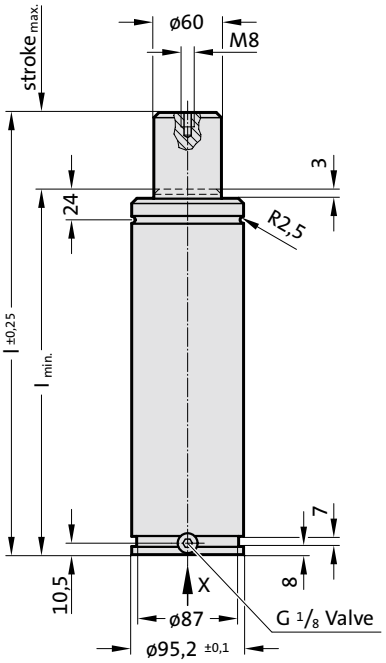

View X

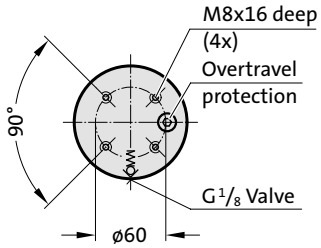



APPROVED PED 97/23/EC | VDI | ISO

S>max | V>max | P>max | Flex Guide™

2488.13.04200.
Gas spring HEAVY DUTY

Order No	Stroke max.	l min.	l
2488.13.04200.025	25	145	170
2488.13.04200.038	38	158	196
2488.13.04200.050	50	170	220
2488.13.04200.063	63	183	246
2488.13.04200.075	75	195	270
2488.13.04200.080	80	200	280
2488.13.04200.100	100	220	320
2488.13.04200.125	125	245	370
2488.13.04200.150	150	270	420
2488.13.04200.160	160	280	440
2488.13.04200.175	175	295	470
2488.13.04200.200	200	320	520
2488.13.04200.250	250	370	620
2488.13.04200.300	300	420	720

Initial spring force
versus charge pressure

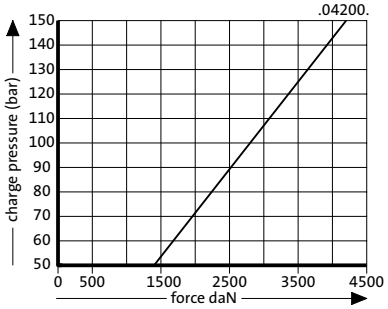

Spring force Diagram displacement versus stroke rise

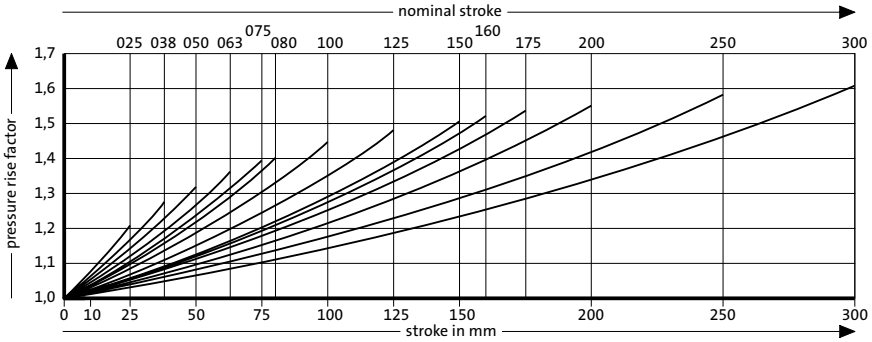

Pressure rise factor accounts for displacement but not external influences!

FIBRO

Gas spring HEAVY DUTY
Mounting variations

2480.011.05000

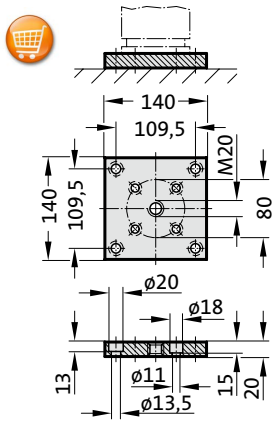

2480.011.05000.2

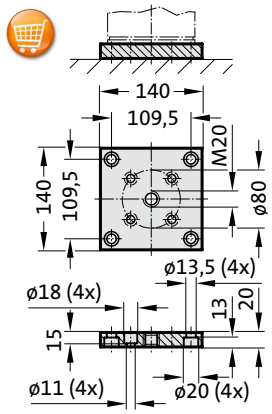

2480.022.05000

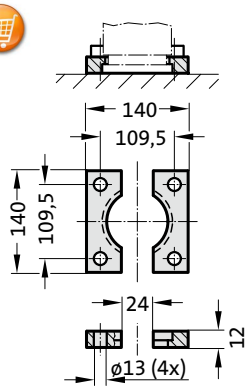

2480.055.05000

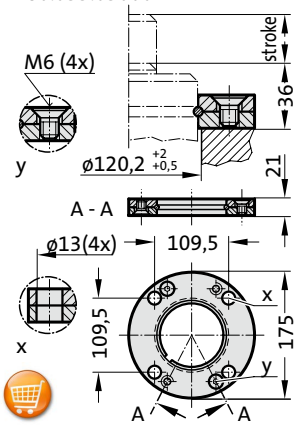

2480.057.05000

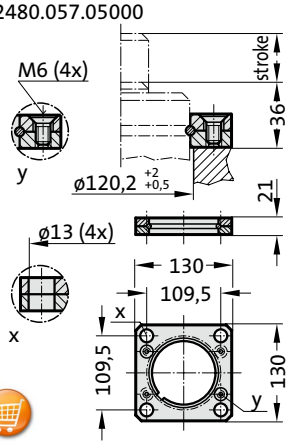

2480.007.05000

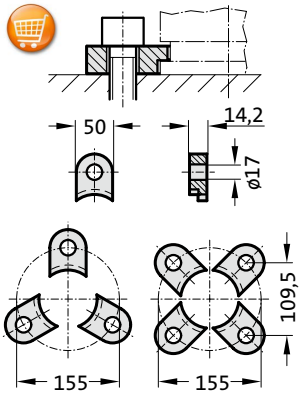

2480.008.05000 3)

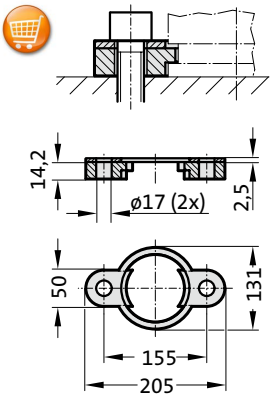

2480.064.05000 4)

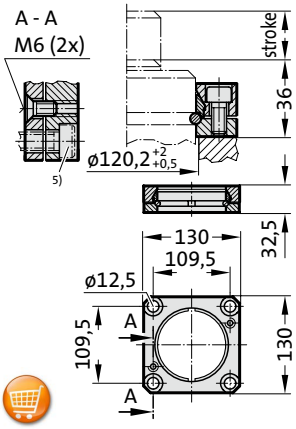

2480.044.05000 2)

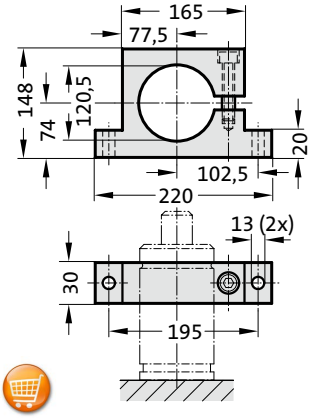

2480.010.05000.160 3)

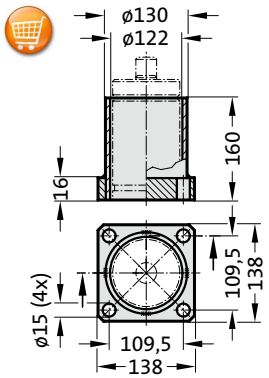

2480.045.05000 2)

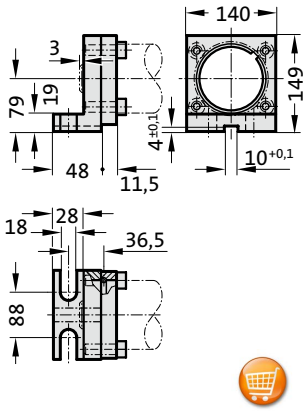

2480.047.05000 2)

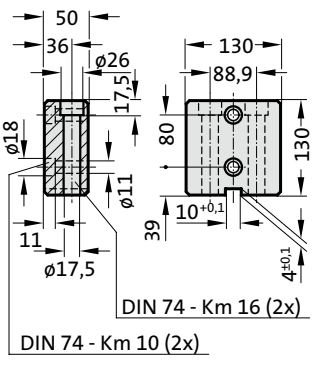

2480.044.03.05000 2)

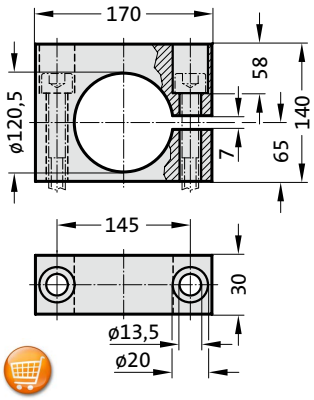

Note:

2) Attention:
The spring force must be absorbed by the stop surface!

3) Not for use with composite connection.

4) Square collar flange, non-rotating, fixing for composite connection.

5) Machine screws with hexagonal socket (compact head recommended)

Gas spring HEAVY DUTY

Note:

Initial spring force at 150 bar = 6600 daN

Order No for spare parts kit: 2488.13.06600

Pressure medium: Nitrogen N_2
Max. filling pressure: 150 bar
Min. filling pressure: 25 bar
Working temperature: 0°C to +80°C
Temperature related force increase: ± 0.3%/°C
Max. recommended extensions per minute: approx. 15 to 100 (at 20°C)
Max. piston speed: 1.6 m/s

2488.13.06600.

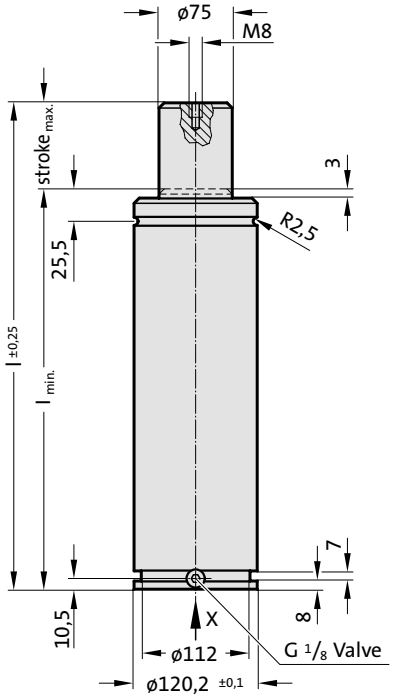

View X

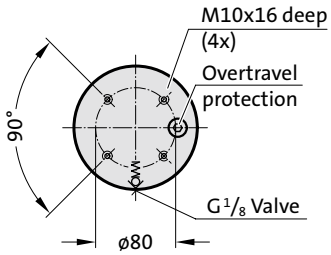



APPROVED PED 97/23/EC | VDI | ISO

S>max | V>max | P>max | Flex Guide™

2488.13.06600.
Gas spring HEAVY DUTY

Order No	Stroke max.	l min.	l
2488.13.06600.025	25	165	190
2488.13.06600.038	38	178	216
2488.13.06600.050	50	190	240
2488.13.06600.063	63	203	266
2488.13.06600.075	75	215	290
2488.13.06600.080	80	220	300
2488.13.06600.100	100	240	340
2488.13.06600.125	125	265	390
2488.13.06600.150	150	290	440
2488.13.06600.160	160	300	460
2488.13.06600.175	175	315	490
2488.13.06600.200	200	340	540
2488.13.06600.250	250	390	640
2488.13.06600.300	300	440	740

Initial spring force
versus charge pressure

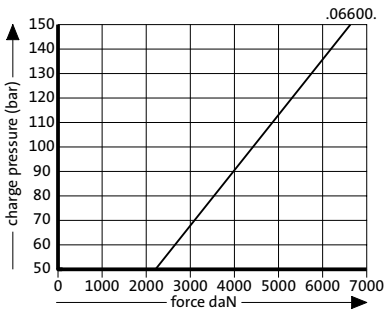

Spring force Diagram displacement versus stroke rise

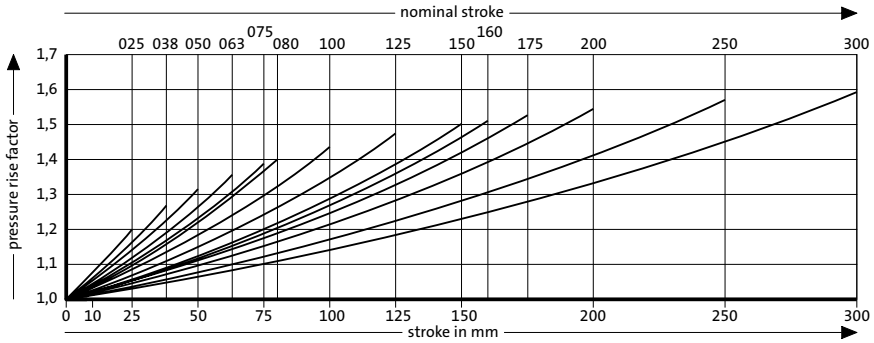

Pressure rise factor accounts for displacement but not external influences!

FIBRO

Gas spring HEAVY DUTY
Mounting variations

2480.011.07500

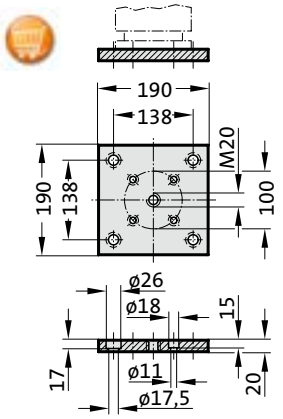

2480.011.07500.2

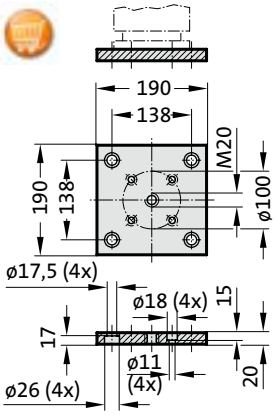

2480.022.07500

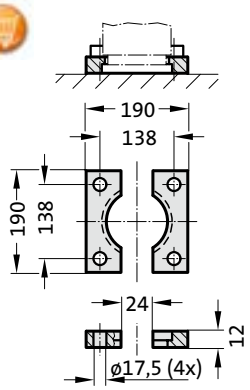

2480.055.07500

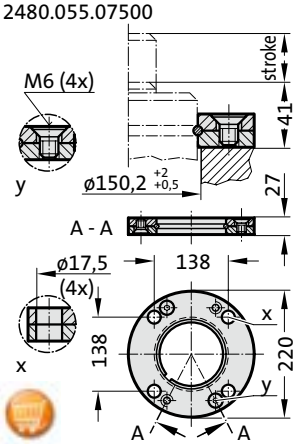

2480.057.07500

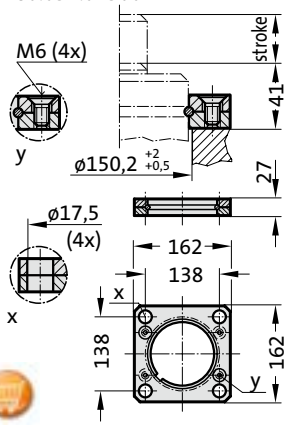

2480.007.07500

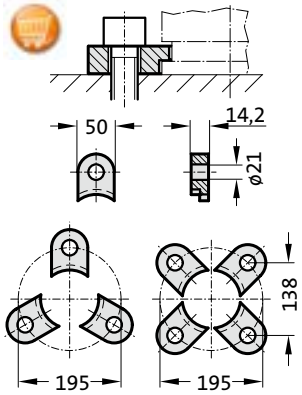

2480.008.07500 [3]

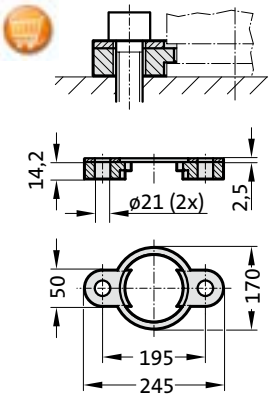

2480.064.07500 [4]

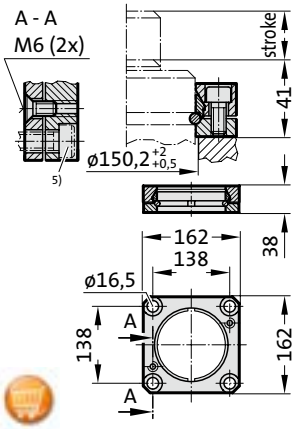

2480.044.07500 [2]

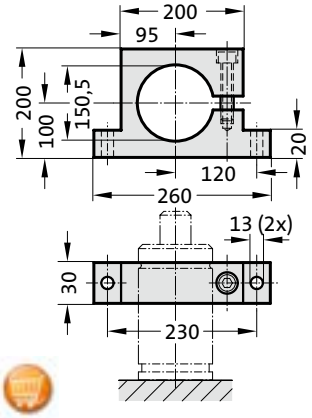

2480.044.03.07500 [2]

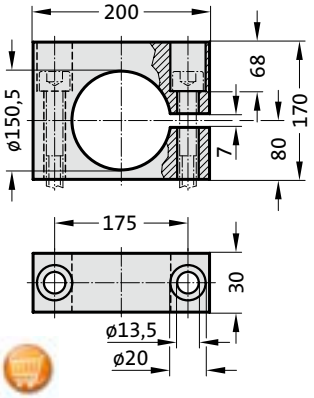

Note:

[2] Attention:
The spring force must be absorbed by the stop surface.

[3] Note:
Not for use with composite connection.

[4] Square collar flange, non-rotating, fixing for composite connection.

[5] Machine screws with hexa-gonal socket (compact head recommended).

Gas spring HEAVY DUTY

Note:

Initial spring force at 150 bar = 9500 daN

Order No for spare parts kit: 2488.13.09500

Pressure medium: Nitrogen N_2
Max. filling pressure: 150 bar
Min. filling pressure: 25 bar
Working temperature: 0°C to +80°C
Temperature related force increase: ± 0.3%/°C
Max. recommended extensions per minute: approx. 15 to 100 (at 20°C)
Max. piston speed: 1.6 m/s

2488.13.09500.

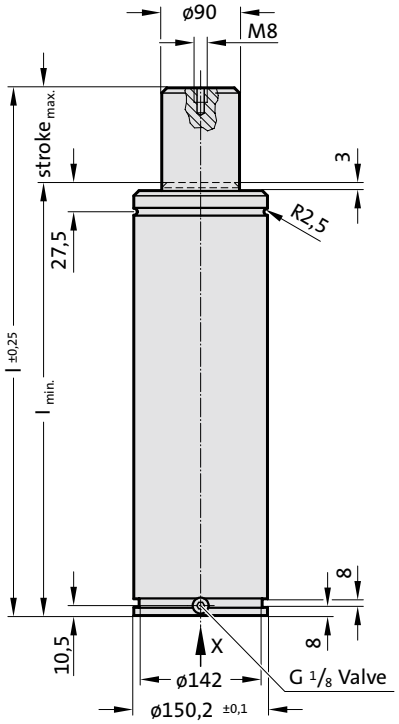

View X

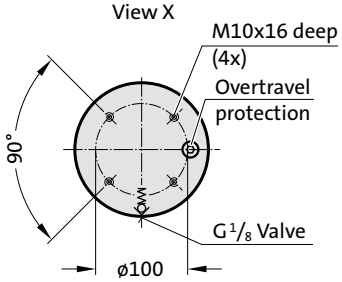



APPROVED PED 97/23/EC | VDI | ISO

S>max | V>max | P>max | Flex Guide™

2488.13.09500.
Gas spring HEAVY DUTY

Order No	Stroke max.	l min.	l
2488.13.09500.025	25	180	205
2488.13.09500.038	38	193	231
2488.13.09500.050	50	205	255
2488.13.09500.063	63	218	281
2488.13.09500.075	75	230	305
2488.13.09500.080	80	235	315
2488.13.09500.100	100	255	355
2488.13.09500.125	125	280	405
2488.13.09500.150	150	305	455
2488.13.09500.160	160	315	475
2488.13.09500.175	175	330	505
2488.13.09500.200	200	355	555
2488.13.09500.250	250	405	655
2488.13.09500.300	300	455	755

Initial spring force
versus charge pressure

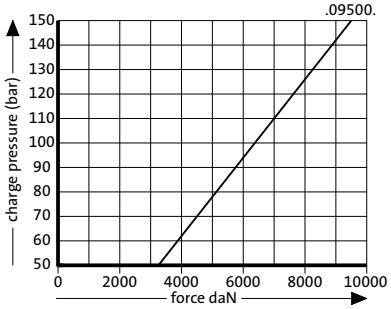

Spring force Diagram displacement versus stroke rise

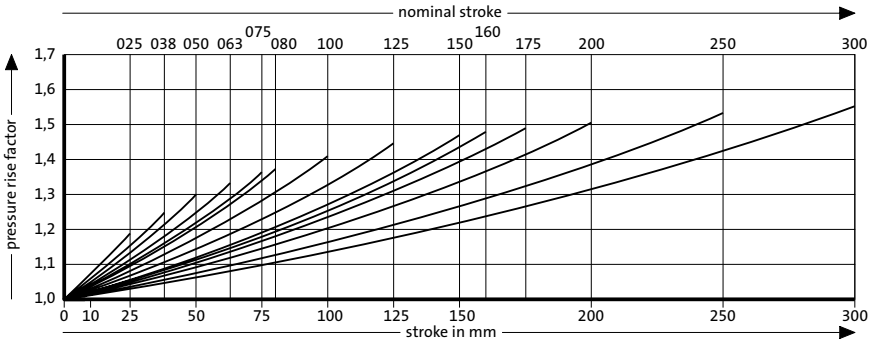

Pressure rise factor accounts for displacement but not external influences!

FIBRO

Gas spring HEAVY DUTY
Mounting variations

2480.011.10000.2

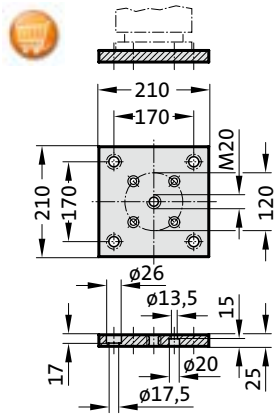

2480.011.10000

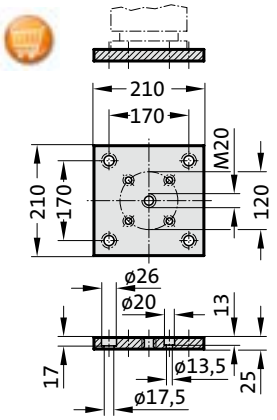

2480.022.10000

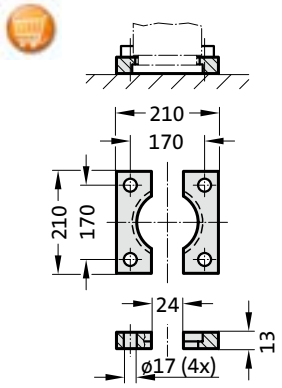

2480.057.10000

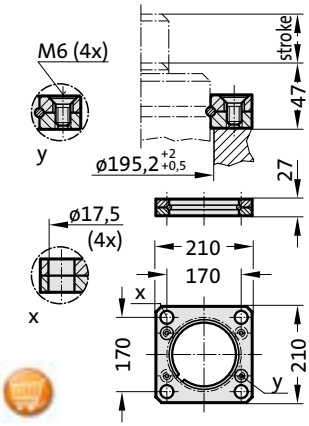

2480.007.10000

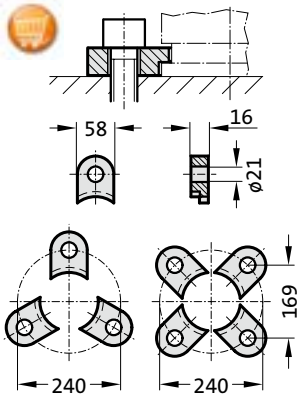

Gas spring HEAVY DUTY

Note:

Initial spring force at 150 bar = 20000 daN

Order No for spare parts kit: 2488.13.20000

Pressure medium: Nitrogen N_2
Max. filling pressure: 150 bar
Min. filling pressure: 25 bar
Working temperature: 0°C to +80°C
Temperature related force increase: ± 0.3%/°C
Max. recommended extensions per minute: approx. 15 to 100 (at 20°C)
Max. piston speed: 1.6 m/s

2488.13.20000.

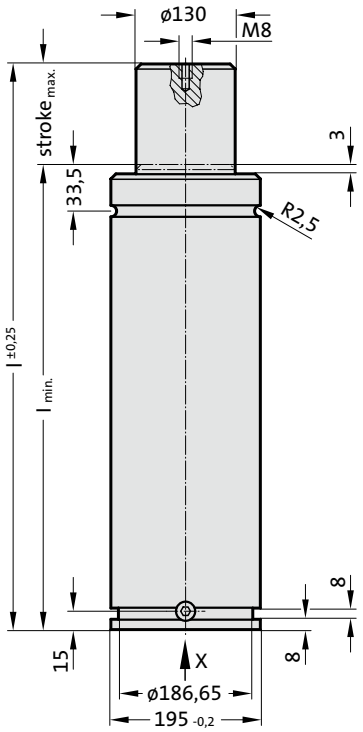

View X

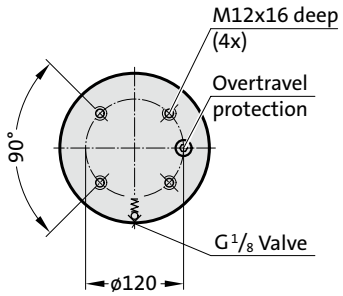



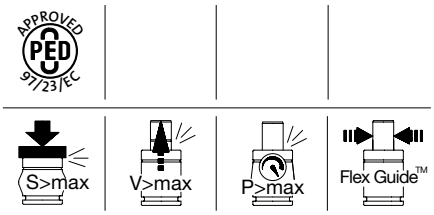

2488.13.20000.
Gas spring HEAVY DUTY

Order No	Stroke max.	l min.	l
2488.13.20000.025	25	185	210
2488.13.20000.038	38	198	236
2488.13.20000.050	50	210	260
2488.13.20000.063	63	223	286
2488.13.20000.075	75	235	310
2488.13.20000.080	80	240	320
2488.13.20000.100	100	260	360
2488.13.20000.125	125	285	410
2488.13.20000.150	150	310	460
2488.13.20000.160	160	320	480
2488.13.20000.175	175	335	510
2488.13.20000.200	200	360	560
2488.13.20000.250	250	410	660
2488.13.20000.300	300	460	760

Initial spring force
versus charge pressure

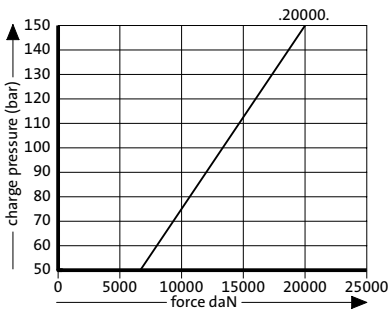

Spring force Diagram displacement versus stroke rise

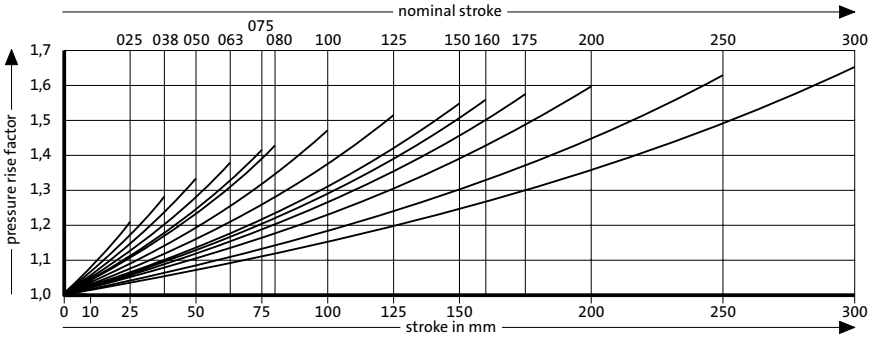

Pressure rise factor accounts for displacement but not external influences!



Gas springs with through bore passage

Gas spring with through bore passage
Mounting variations

2480.055.00250

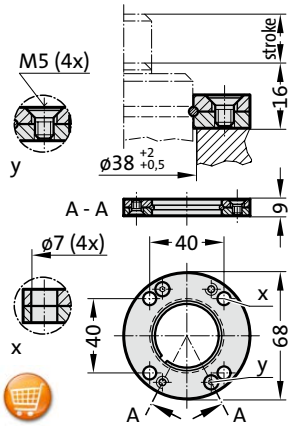

2480.057.00250

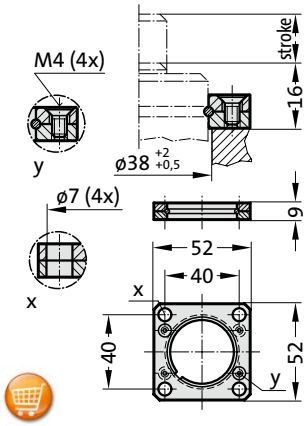

Mounting examples:

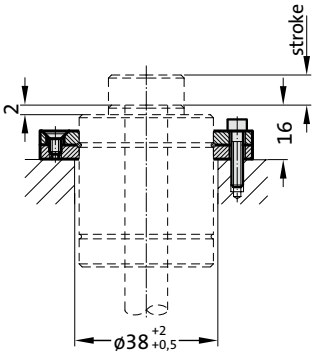

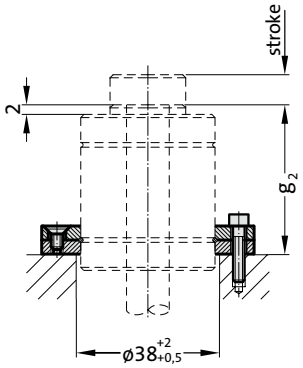

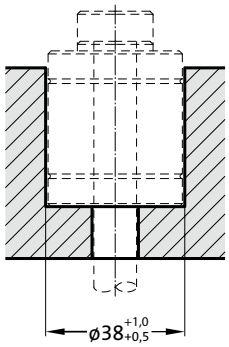

subject to alterations

Gas spring with through bore passage

Note:

Initial spring force at 150 bar = 270 daN

Order No for spare parts kit: 2496.12.00270

Pressure medium: Nitrogen N_2
Max. filling pressure: 150 bar
Min. filling pressure: 50 bar
Working temperature: 20°C to +80°C
Temperature related force increase: ± 0.3%/°C
Max. recommended extensions per minute: approx. 15 to 40 (at 20°C)
Max. piston speed: 0.5 m/s

2496.12.00270.

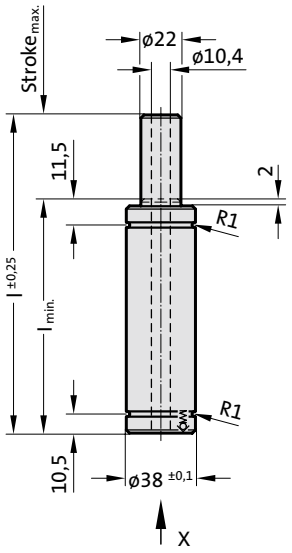

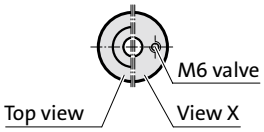



APPROVED PED 97/23/EC

V>max

2496.12.00270.

Gas spring with through bore passage

Order No	Stroke max.	l min.	l	g2*
2496.12.00270.016	16	92	108	86
2496.12.00270.025	25	101	126	95
2496.12.00270.050	50	126	176	120
2496.12.00270.080	80	156	236	150

*see mounting example

Initial spring force
versus charge pressure

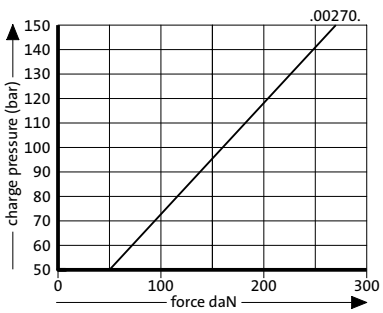

Spring force Diagram displacement versus stroke rise

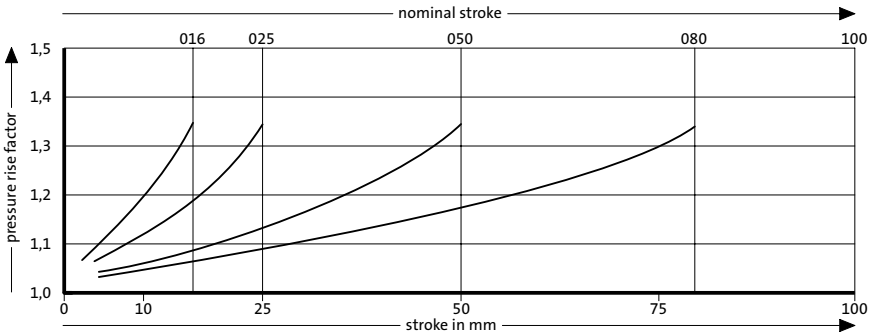

Pressure rise factor accounts for displacement but not external influences!

Gas spring with through bore passage
Mounting variations

2480.055.00750

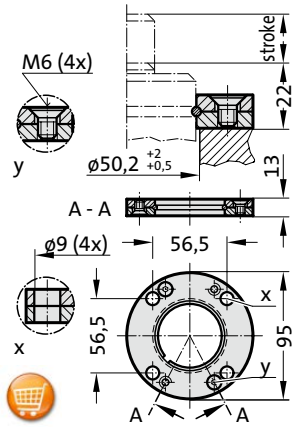

2480.057.00750

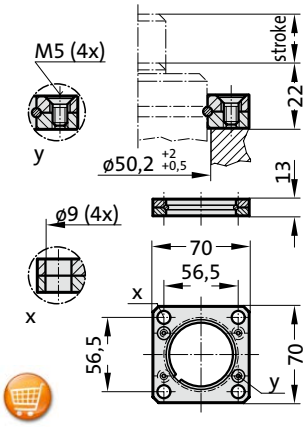

2480.064.00750 [4]

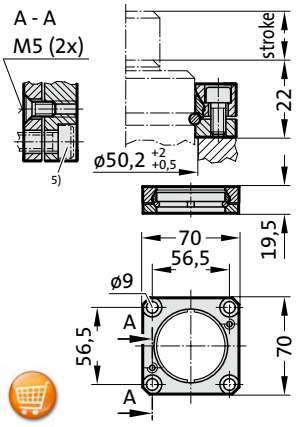

Note:

[4] Square collar flange, non-rotating, fixing for composite connection.

[5] Machine screws with hexagonal socket (compact head recommended)

Mounting examples:

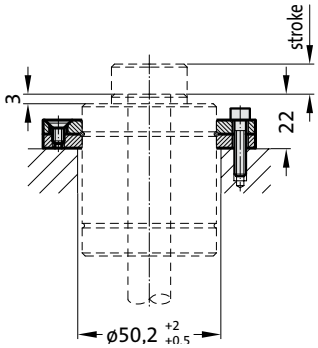

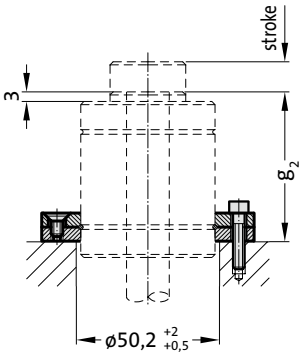

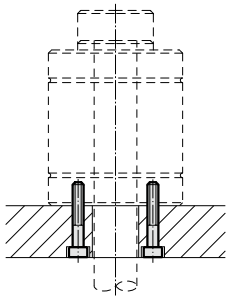

see Note!

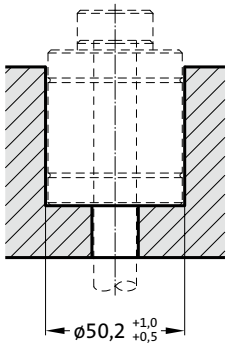

Gas spring with through bore passage

Note:

Initial spring force at 150 bar = 490 daN

When mounting to floor, contact over the entire floor of the cylinder tube must be ensured!

Order No for spare parts kit: 2496.12.00490

Pressure medium: Nitrogen N_2
Max. filling pressure: 150 bar
Min. filling pressure: 50 bar
Working temperature: 20°C to +80°C
Temperature related force increase: ± 0.3%/°C
Max. recommended extensions per minute: approx. 15 to 40 (at 20°C)
Max. piston speed: 0.5 m/s

2496.12.00490.

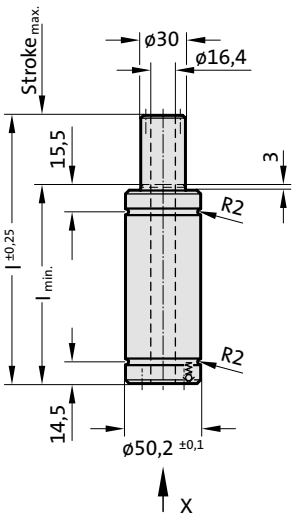

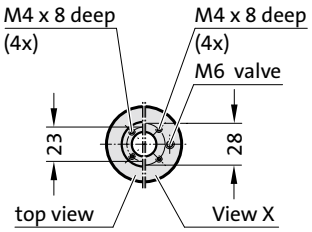



APPROVED PED 97/23/EC

V>max

2496.12.00490.

Gas spring with through bore passage

Order No	Stroke$_{max.}$	l$_{min.}$	l	g$_2$*
2496.12.00490.016	16	96	112	88
2496.12.00490.025	25	105	130	97
2496.12.00490.050	50	130	180	122
2496.12.00490.080	80	160	240	152

*see mounting example

Initial spring force
versus charge pressure

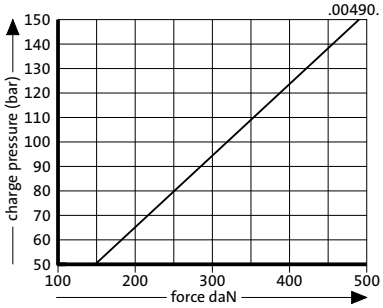

Spring force Diagram displacement versus stroke rise

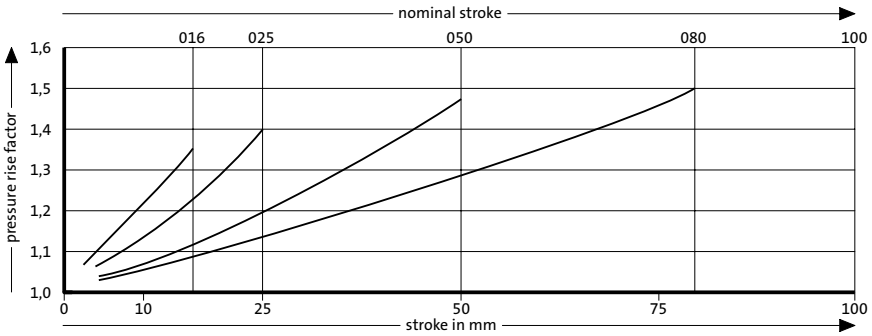

Pressure rise factor accounts for displacement but not external influences!

Gas spring with through bore passage
Mounting variations

2480.055.01500

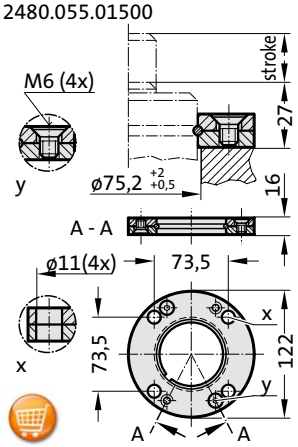

2480.057.01500

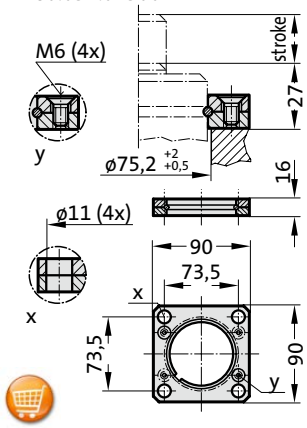

2480.064.01500 [4]

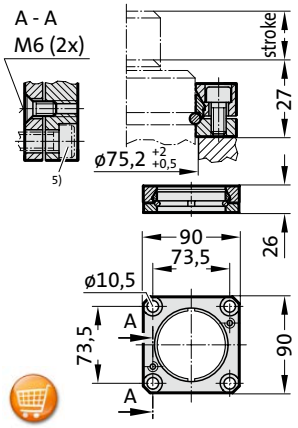

Note:

[4] Square collar flange, non-rotating, fixing for composite connection.

[5] Machine screws with hexagonal socket (compact head recommended).

Mounting examples:

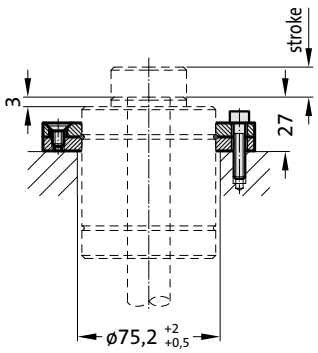

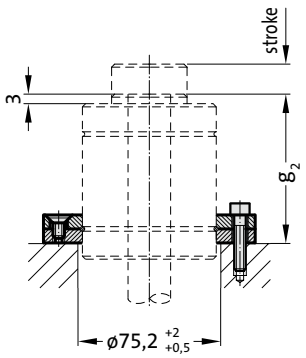

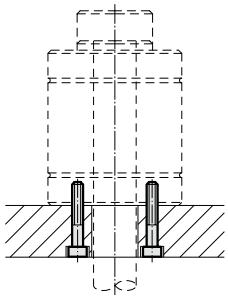

see Note!

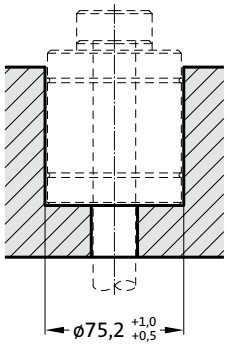

Gas spring with through bore passage

Note:

Initial spring force at 150 bar = 1060 daN

When mounting to floor, contact over the entire floor of the cylinder tube must be ensured!

Order No for spare parts kit: 2496.12.01060

Pressure medium: Nitrogen N_2
Max. filling pressure: 150 bar
Min. filling pressure: 50 bar
Working temperature: 20°C to +80°C
Temperature related force increase: ± 0.3%/°C
Max. recommended extensions per minute: approx. 15 to 40 (at 20°C)
Max. piston speed: 0.5 m/s

2496.12.01060.

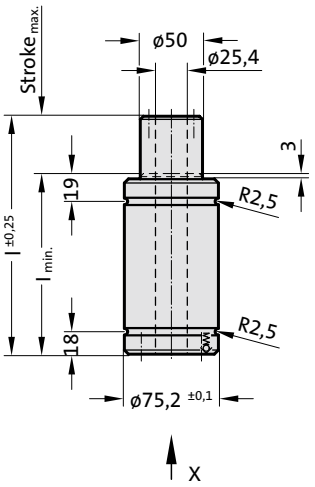



APPROVED PED 97/23/EC

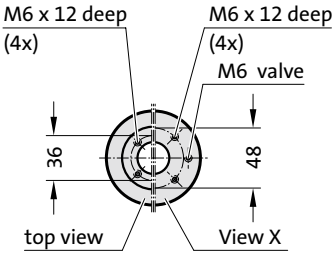

V>max

2496.12.01060.

Gas spring with through bore passage

Order No	Stroke max.	l min.	l	g2*
2496.12.01060.016	16	106	122	96
2496.12.01060.025	25	115	140	105
2496.12.01060.050	50	140	190	130
2496.12.01060.080	80	170	250	160
2496.12.01060.100	100	190	290	180

*see mounting example

Initial spring force
versus charge pressure

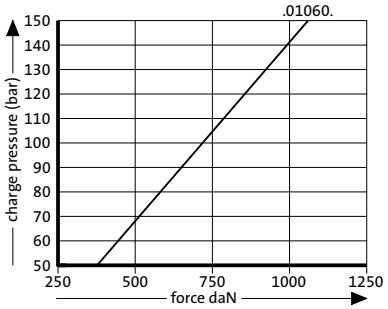

Spring force Diagram displacement versus stroke rise

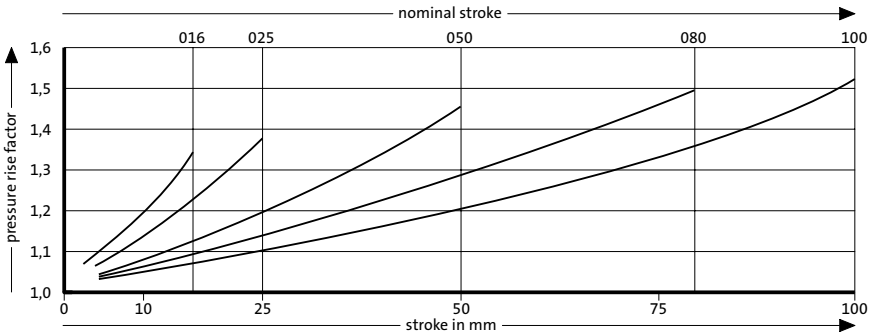

Pressure rise factor accounts for displacement but not external influences!



Gas springs with increased spring force POWER LINE

FIBRO

Gas Spring POWERLINE
Mounting variations

2480.051.03.00030

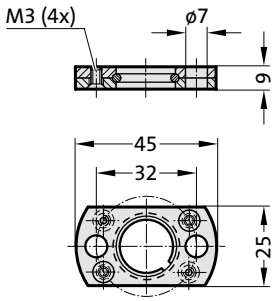

2480.051.03.00030

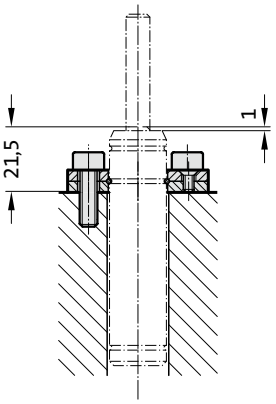

2480.051.00030

phasing out

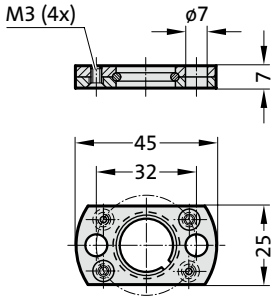

2480.051.00030

phasing out

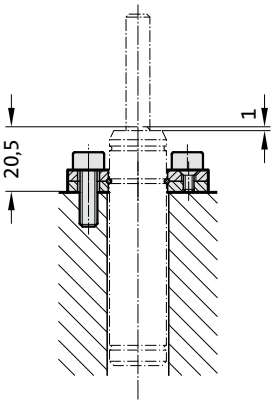

2480.052.00030

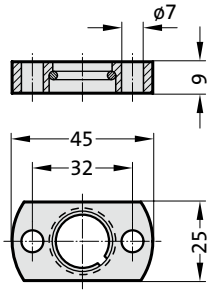

Mounting examples:

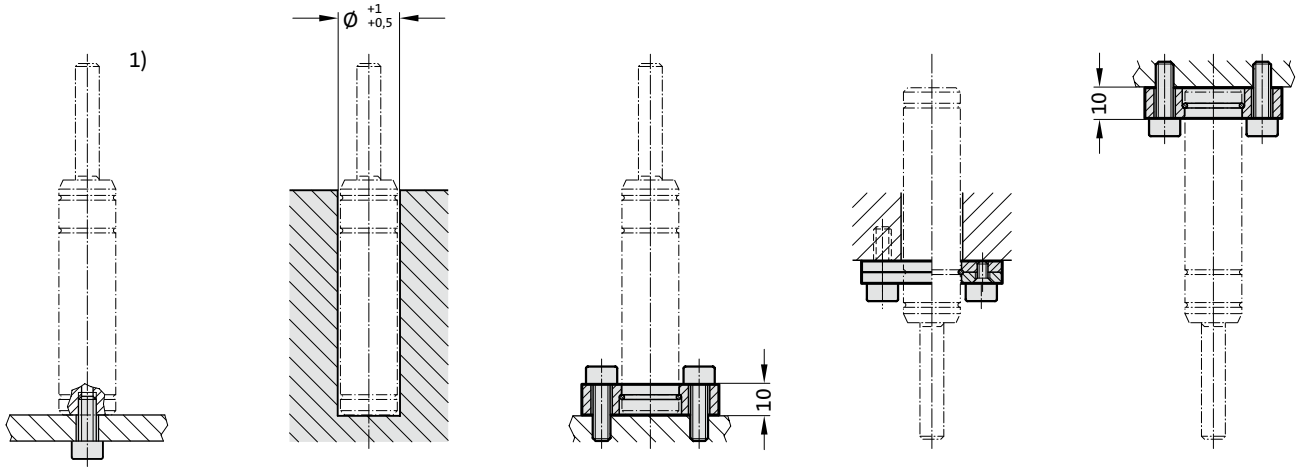

Gas spring POWERLINE

Note:

Initial spring force at 180 bar = 170 daN

Worn gas springs cannot be repaired, they have to be replaced completely.

1) Fixing at bottom thread only recommandedfor stroke length up to 50 mm.

Pressure medium: Nitrogen N_2
Max. filling pressure: 180 bar
Min. filling pressure: 25 bar
Working temperature: 0°C to +80°C
Temperature related force increase: ± 0.3%/°C
Max. recommended extensions per minute: approx. 400 to 100 (at 20°C)
Max. piston speed: 1.6 m/s

2487.12.00170.

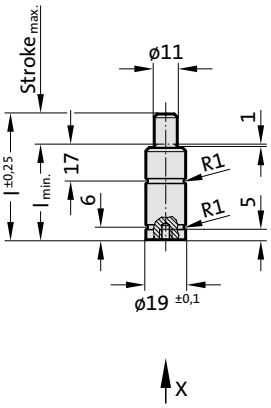

View X

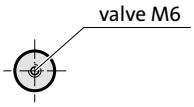



APPROVED PED 97/23/EC | VDI | ISO

S>max | V>max | P>max

2487.12.00170.
Gas spring POWERLINE

Order No	Stroke$_{max.}$	l$_{min.}$	l
2487.12.00170.007	7	37	44
2487.12.00170.010	10	40	50
2487.12.00170.015	15	45	60
2487.12.00170.019	19	49	68
2487.12.00170.025	25	55	80
2487.12.00170.038	38	68	106
2487.12.00170.050	50	80	130
2487.12.00170.063	63	93	156
2487.12.00170.075	75	110	185
2487.12.00170.080	80	115	195
2487.12.00170.100	100	135	235
2487.12.00170.125	125	160	285

Initial spring force
versus charge pressure

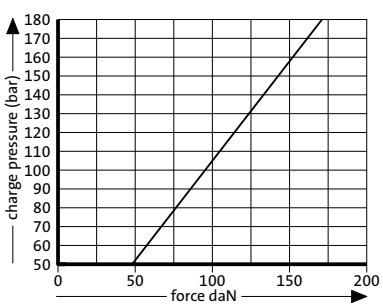

Spring force Diagram displacement versus stroke rise

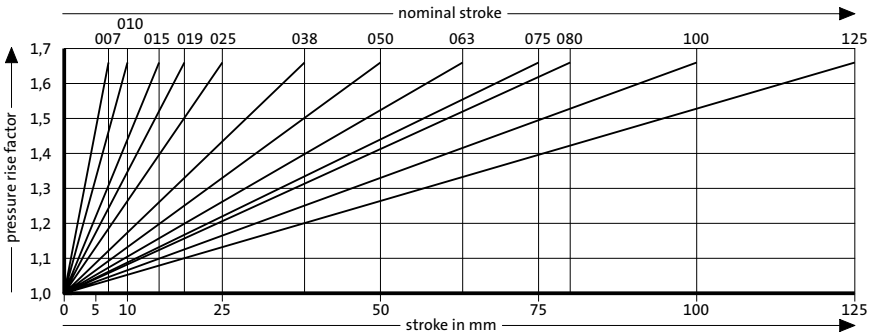

Pressure rise factor accounts for displacement but not external influences!

FIBRO

Gas spring POWERLINE
Mounting variations

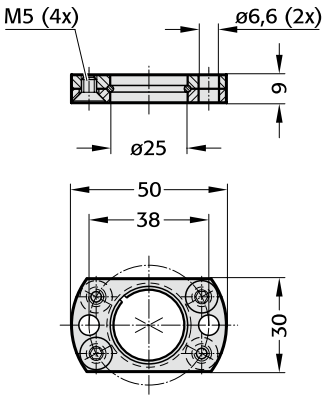

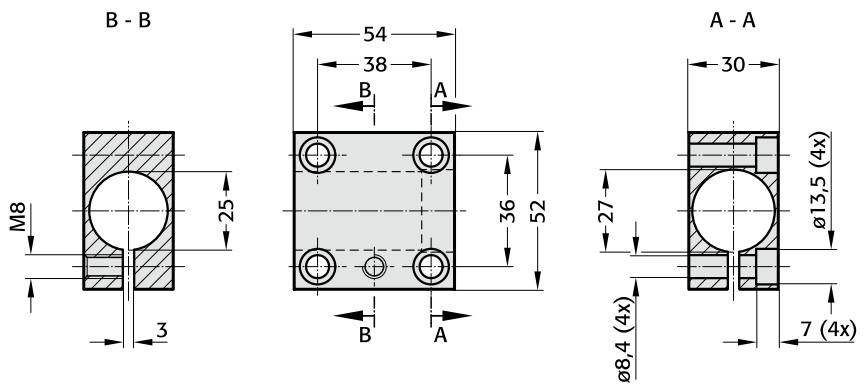

Mounting examples:

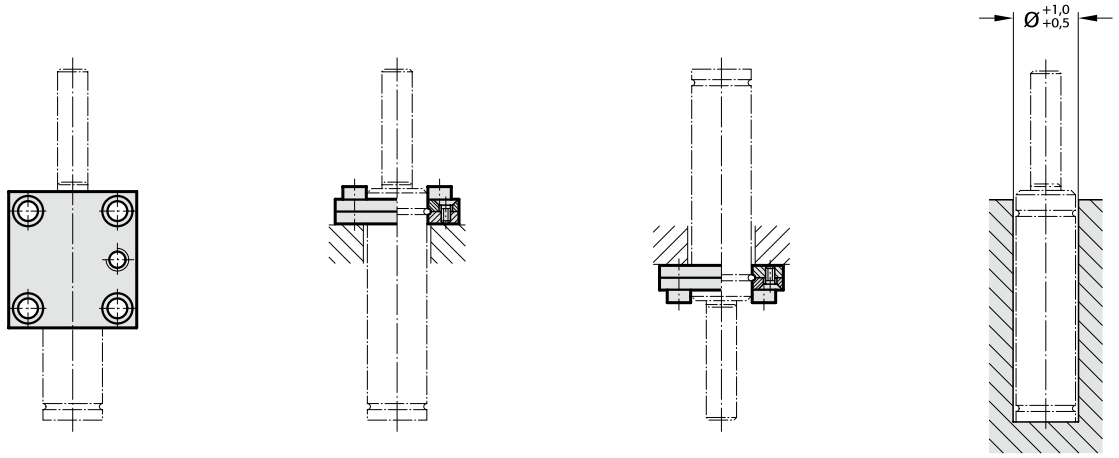

subject to alterations

Gas spring POWERLINE

Note:

Initial spring force at 180 bar = 320 daN

Worn gas springs cannot be repaired, they have to be replaced completely.

Pressure medium: Nitrogen N_2
Max. filling pressure: 180 bar
Min. filling pressure: 25 bar
Working temperature: 0°C to +80°C
Temperature related force increase: ± 0.3%/°C
Max. recommended extensions per minute: approx. 400 to 100 (at 20°C)
Max. piston speed: 1.6 m/s

2487.12.00320.

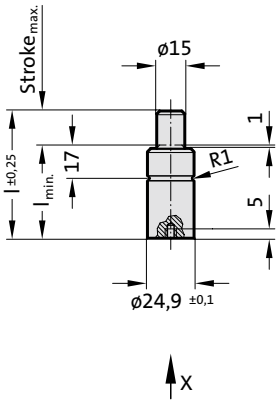

View X

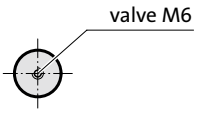



APPROVED PED 97/23/EC | ISO

S>max | V>max | P>max

2487.12.00320.
Gas spring POWERLINE

Order No	Stroke max.	l min.	l
2487.12.00320.007	7	37	44
2487.12.00320.010	10	40	50
2487.12.00320.015	15	45	60
2487.12.00320.019	19	49	68
2487.12.00320.025	25	55	80
2487.12.00320.038	38	68	106
2487.12.00320.050	50	80	130
2487.12.00320.063	63	93	156
2487.12.00320.075	75	110	185
2487.12.00320.080	80	115	195
2487.12.00320.100	100	135	235
2487.12.00320.125	125	160	285

Initial spring force
versus charge pressure

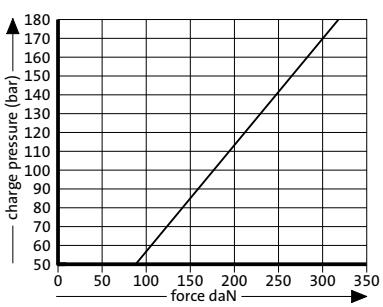

Spring force Diagram displacement versus stroke rise

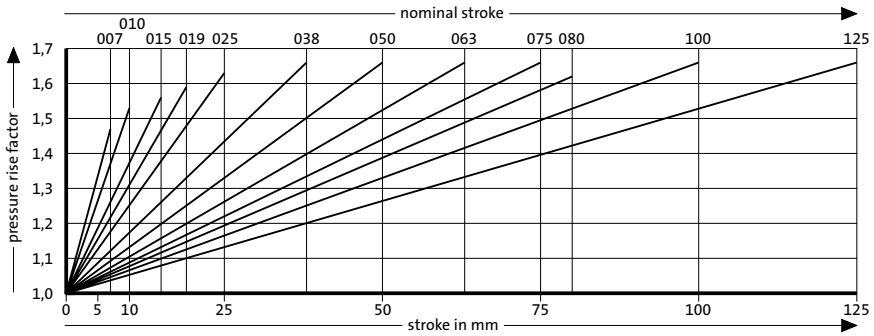

Pressure rise factor accounts for displacement but not external influences!

Gas spring POWERLINE
Mounting variations

2480.022.00150

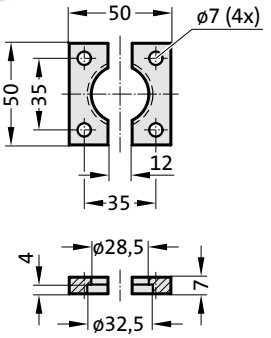

2480.055.00150

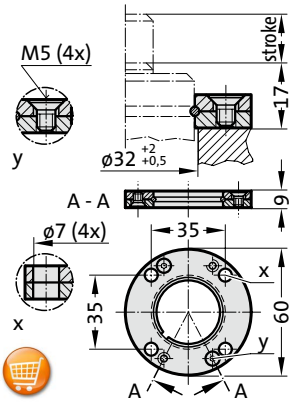

2480.057.00150

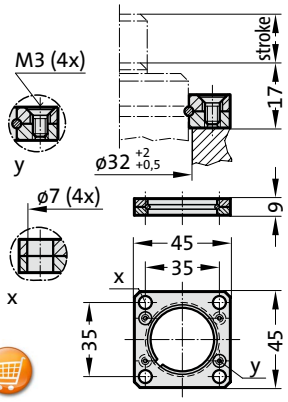

2480.044.03.00150 [2)]

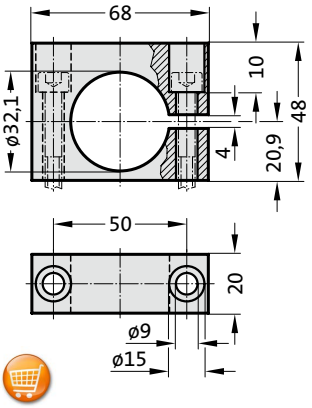

2480.044.00150 [2)]

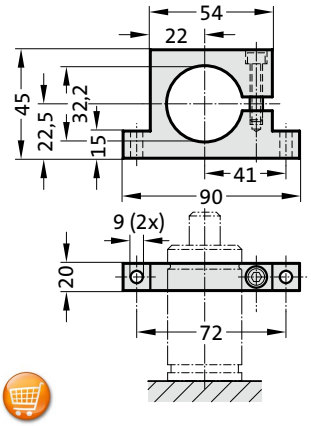

Note:

[2)] Attention:
The spring force must be absorbed by the stop surface.

Mounting examples:

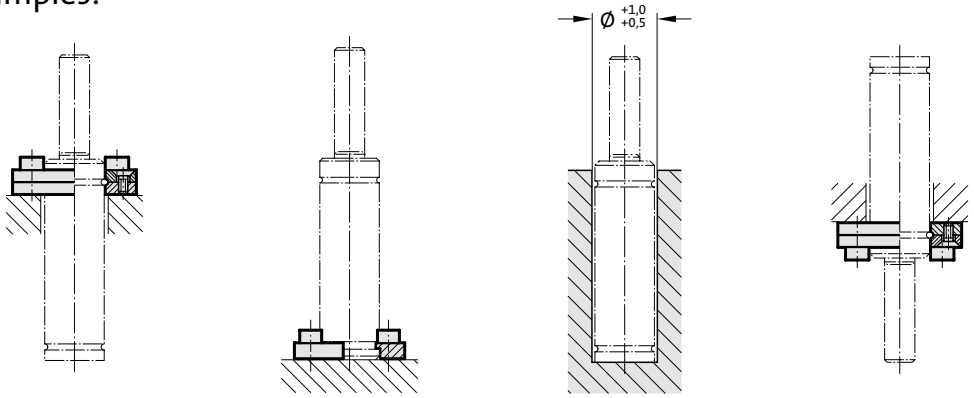

subject to alterations

Gas spring POWERLINE

Note:

Initial spring force at 180 bar = 350 daN

Order No for spare parts kit: 2487.12.00350

Pressure medium: Nitrogen N_2
Max. filling pressure: 180 bar
Min. filling pressure: 25 bar
Working temperature: 0°C to +80°C
Temperature related force increase: ± 0.3%/°C
Max. recommended extensions per minute: approx. 20 to 100 (at 20°C)
Max. piston speed: 1.6 m/s

2487.12.00350.

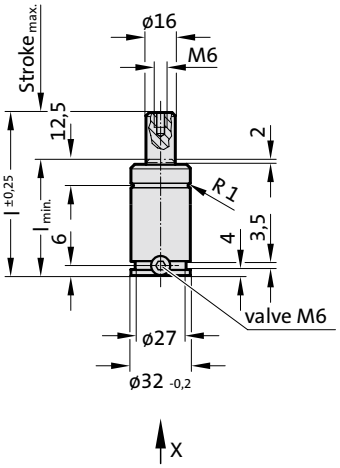

View X

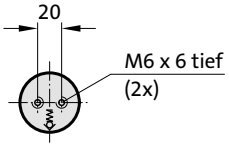



APPROVED PED 97/23/EC | VDI | ISO

S>max | V>max | P>max | Flex Guide™

2487.12.00350.
Gas spring POWERLINE

Order No	Stroke max.	l min.	l
2487.12.00350.010	10	40	50
2487.12.00350.013	13	43	56
2487.12.00350.016	16	46	62
2487.12.00350.019	19	49	68
2487.12.00350.025	25	55	80
2487.12.00350.032	32	62	94
2487.12.00350.038	38	68	106
2487.12.00350.050	50	80	130
2487.12.00350.063	63	93	156
2487.12.00350.075	75	105	180
2487.12.00350.080	80	110	190
2487.12.00350.100	100	130	230
2487.12.00350.125	125	155	280

Initial spring force
versus charge pressure

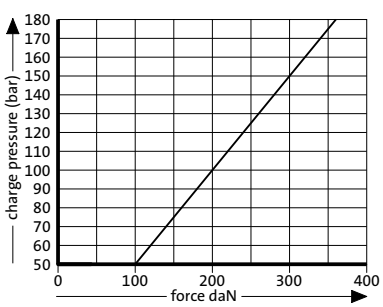

Spring force Diagram displacement versus stroke rise

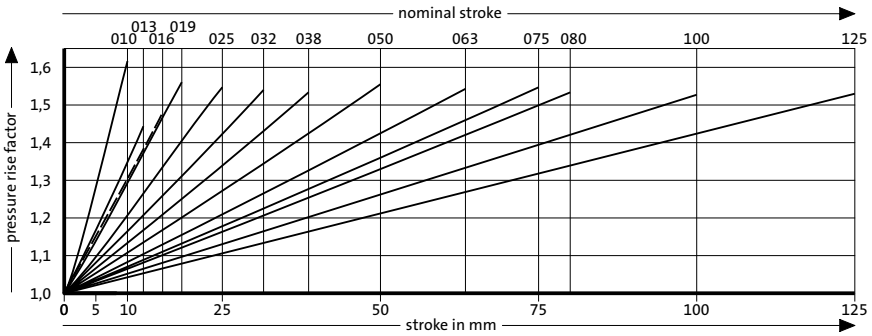

Pressure rise factor accounts for displacement but not external influences!

Gas spring POWERLINE
Mounting variations

2480.022.00250

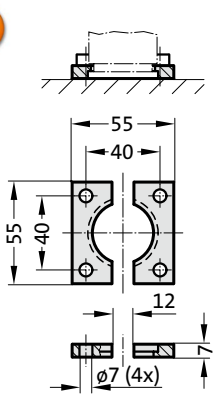

2480.055.00250

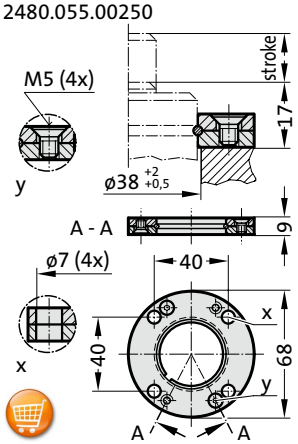

2480.057.00250

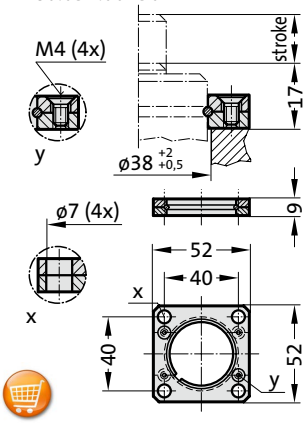

2480.007.00250

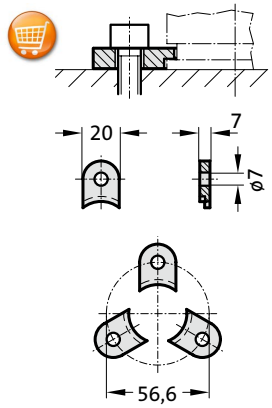

2480.008.00250 [3]

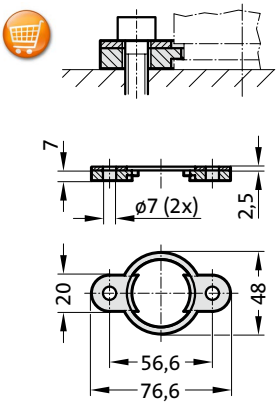

2480.044.03.00250 [2]

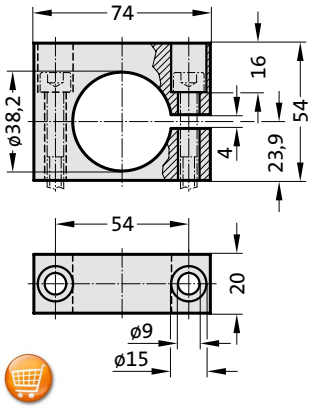

2480.044.00250 [2]

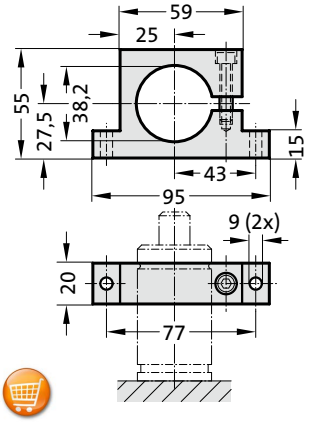

2480.010.00250.055 [3]
2480.010.00250.095* [3]

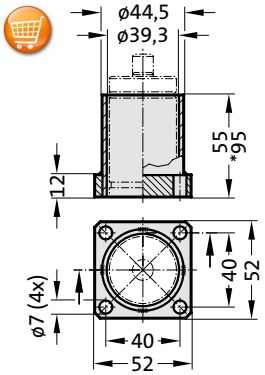

Note:

[2] Attention:
The spring force must be absorbed by the stop surface!

[3] Not for use with composite connection.

subject to alterations

Gas spring POWERLINE

Note:

Initial spring force at 150 bar = 470 daN

Order No for spare parts kit: 2487.12.00500

Pressure medium: Nitrogen N_2
Max. filling pressure: 150 bar
Min. filling pressure: 25 bar
Working temperature: 0°C to +80°C
Temperature related force increase: ± 0.3%/°C
Max. recommended extensions per minute: approx. 20 to 100 (at 20°C)
Max. piston speed: 1.6 m/s

2487.12.00500.

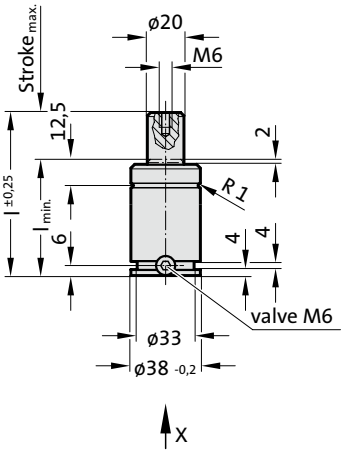



APPROVED PED 97/23/EC | VDI | ISO

S>max | V>max | P>max | Flex Guide™

View X

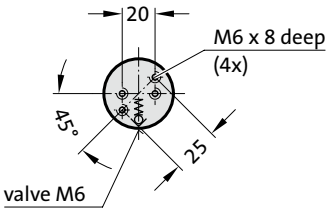

2487.12.00500.
Gas spring POWERLINE

Order No	Stroke max.	l min.	l
2487.12.00500.010	10	40	50
2487.12.00500.013	13	43	56
2487.12.00500.016	16	46	62
2487.12.00500.019	19	49	68
2487.12.00500.025	25	55	80
2487.12.00500.032	32	62	94
2487.12.00500.038	38	68	106
2487.12.00500.050	50	80	130
2487.12.00500.063	63	93	156
2487.12.00500.075	75	105	180
2487.12.00500.080	80	110	190
2487.12.00500.100	100	130	230
2487.12.00500.125	125	155	280

Initial spring force
versus charge pressure

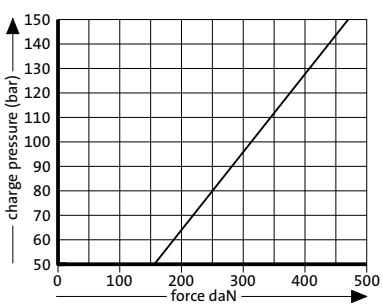

Spring force Diagram displacement versus stroke rise

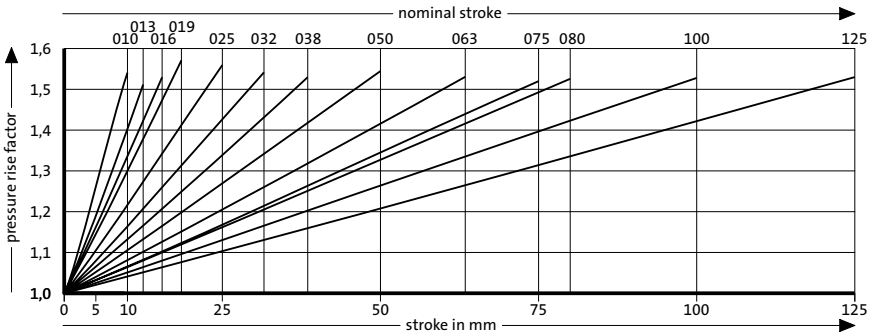

Pressure rise factor accounts for displacement but not external influences!

FIBRO

Gas spring POWERLINE
Mounting variations

2480.011.00500.2

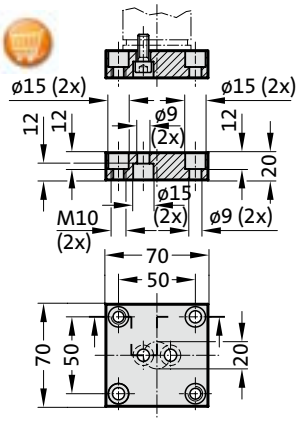

2480.011.00500

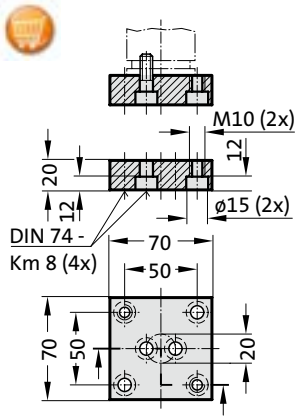

2480.011.00500.1

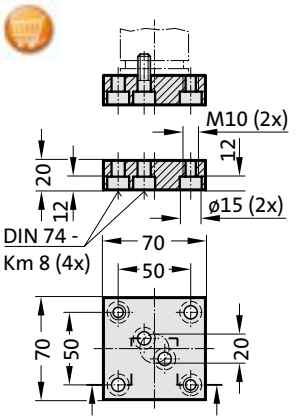

2480.022.00500

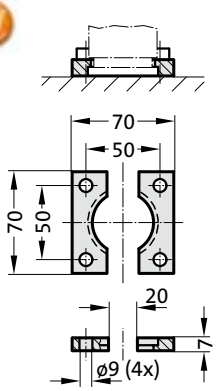

2480.055.00500

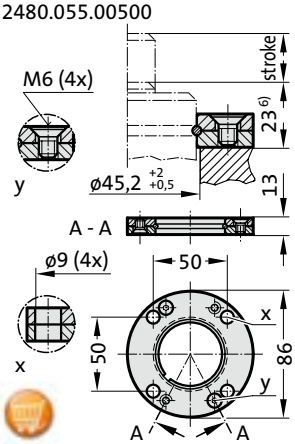

2480.057.00500

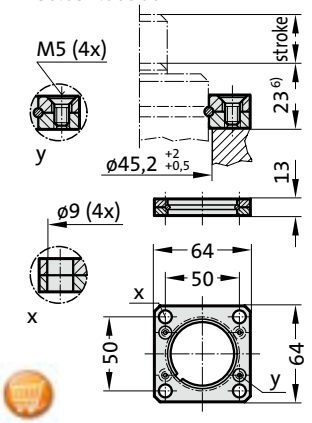

2480.007.00500

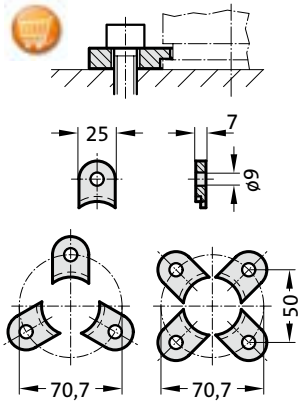

2480.008.00500 3)

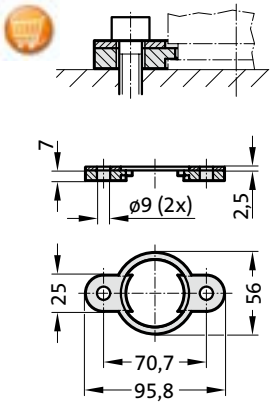

2480.044.03.00500 2)

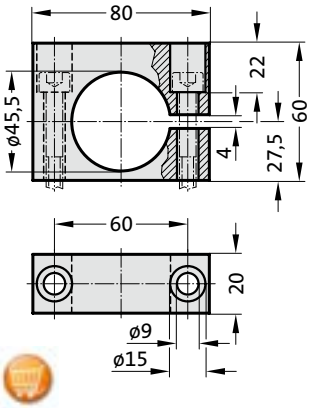

2480.044.00500 2)

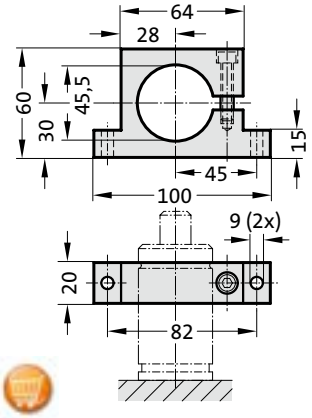

2480.010.00500.095 3)

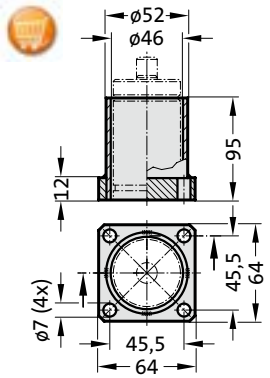

2480.064.00500 4)

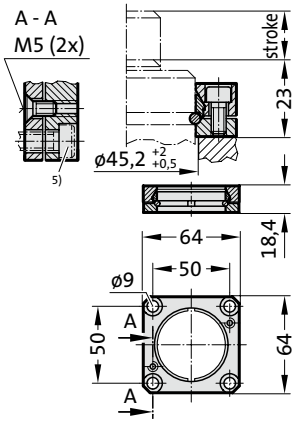

Note:

2) Attention:
The spring force must be absorbed by the stop surface!

3) Not for use with composite connection.

4) Square collar flange, non-rotating, fixing for composite connection.

5) Machine screws with hexagonal socket (compact head recommended)

6) Installation height increased from 22 mm to 24 mm, installation position from 3 mm to 5 mm according to VDI 3003.

Gas spring POWERLINE

Note:

Initial spring force at 150 bar = 750 daN

Order No for spare parts kit: 2487.12.00750

Pressure medium: Nitrogen N_2
Max. filling pressure: 150 bar
Min. filling pressure: 25 bar
Working temperature: 0°C to +80°C
Temperature related force increase: ± 0.3%/°C
Max. recommended extensions per minute: approx. 20 to 100 (at 20°C)
Max. piston speed: 1.6 m/s

2487.12.00750. .1

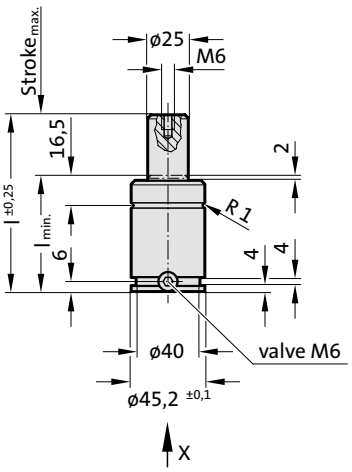

View X

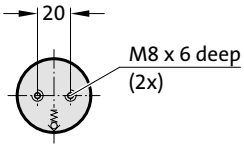



S>max V>max P>max Flex Guide™

2487.12.00750. .1

Gas spring POWERLINE

Order No	Stroke max.	l min.	l
2487.12.00750.010.1	10	42	52
2487.12.00750.013.1	13	45	58
2487.12.00750.016.1	16	48	64
2487.12.00750.019.1	19	51	70
2487.12.00750.025.1	25	57	82
2487.12.00750.032.1	32	64	96
2487.12.00750.038.1	38	70	108
2487.12.00750.050.1	50	82	132
2487.12.00750.063.1	63	95	158
2487.12.00750.075.1	75	107	182
2487.12.00750.080.1	80	112	192
2487.12.00750.100.1	100	132	232
2487.12.00750.125.1	125	157	282

Initial spring force
versus charge pressure

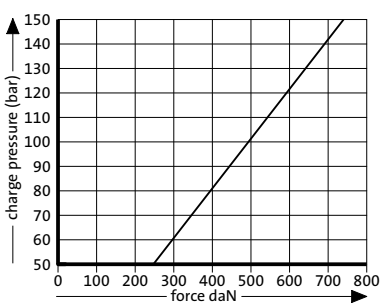

Spring force Diagram displacement versus stroke rise

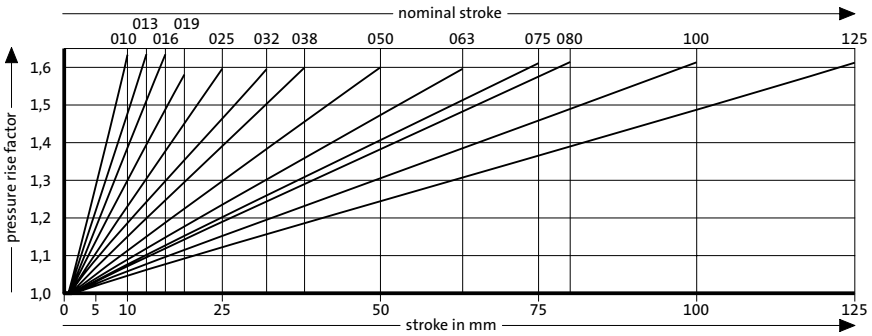

Pressure rise factor accounts for displacement but not external influences!

FIBRO

Gas spring POWERLINE
Mounting variations

2480.011.00750.3

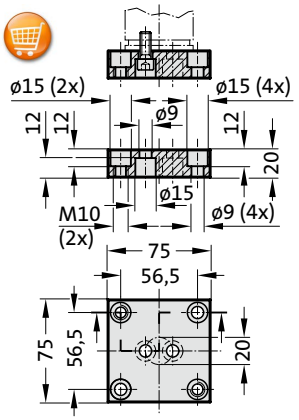

2480.011.00750

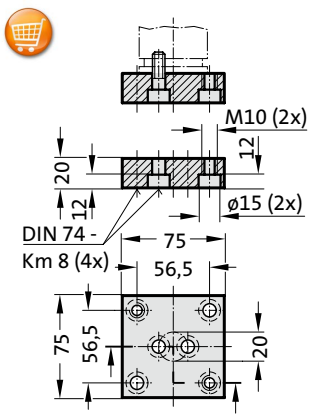

2480.011.00750.1

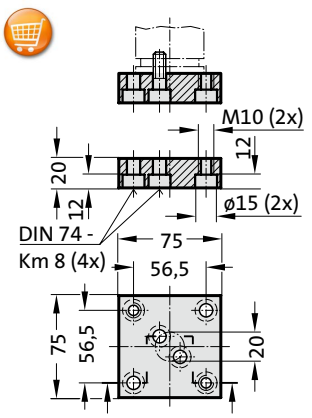

2480.022.00750

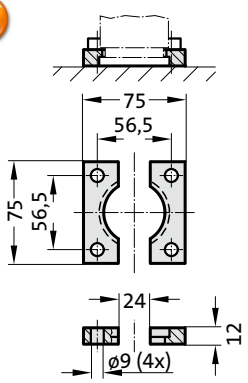

2480.055.00750

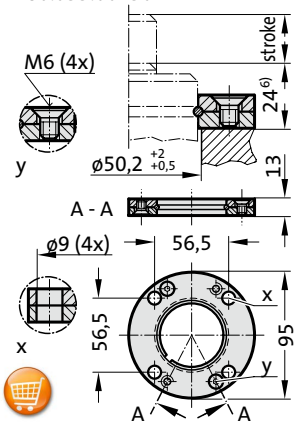

2480.057.00750

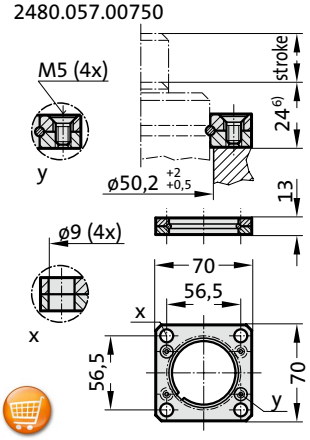

2480.007.00750

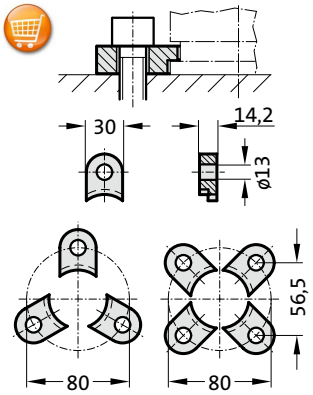

2480.008.00750 3)

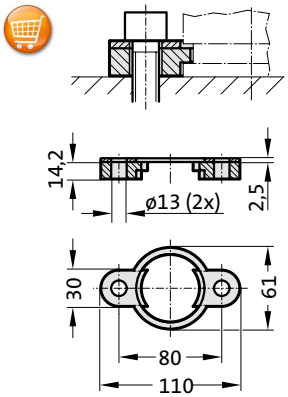

2480.064.00750 4)

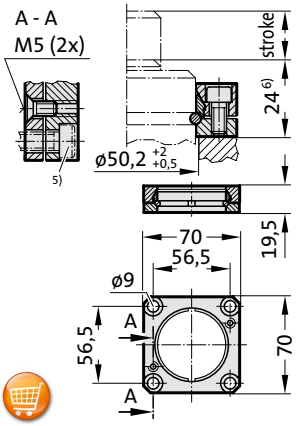

2480.044.00750 2)

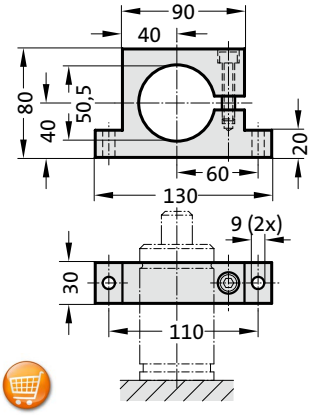

2480.010.00750.115 3)

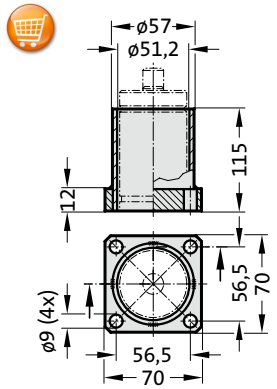

2480.045.00750 2)

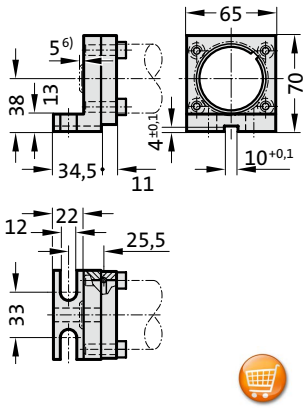

2480.047.00750 2)

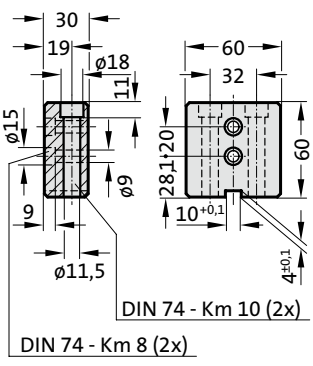

2480.044.03.00750 2)

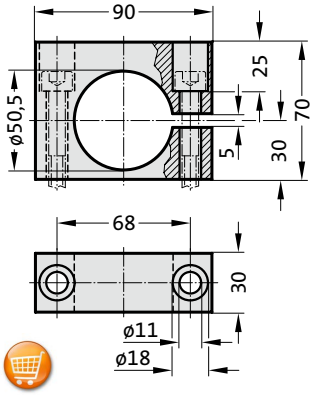

Note:

2) Attention:
The spring force must be absorbed by the stop surface!

3) Not for use with composite connection.

4) Square collar flange, non-rotating, fixing for composite connection.

5) Machine screws with hexagonal socket (compact head recommended)

6) Installation height increased from 22 mm to 24 mm, installation position from 3 mm to 5 mm according to VDI 3003.

Gas spring POWERLINE

Note:

Initial spring force at 150 bar = 920 daN

Order No for spare parts kit: 2487.12.01000

Pressure medium: Nitrogen N_2
Max. filling pressure: 150 bar
Min. filling pressure: 25 bar
Working temperature: 0°C to +80°C
Temperature related force increase: ± 0.3%/°C
Max. recommended extensions per minute: approx. 20 to 100 (at 20°C)
Max. piston speed: 1.6 m/s

2487.12.01000. .1

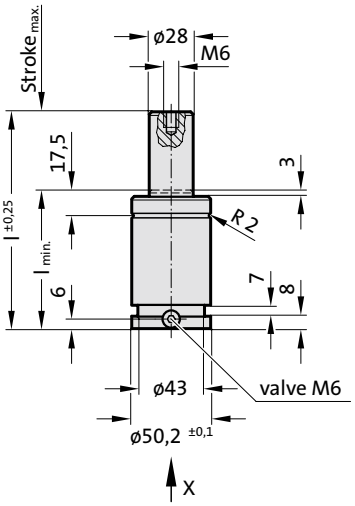

View X

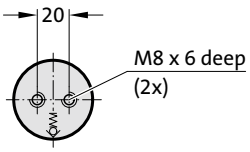



APPROVED PED 97/23/EC | VDI | ISO

S>max | V>max | P>max | Flex Guide™

2487.12.01000. .1

Gas spring POWERLINE

Order No	Stroke$_{max.}$	$l_{min.}$	l
2487.12.01000.013.1	13	51	64
2487.12.01000.016.1	16	54	70
2487.12.01000.019.1	19	57	76
2487.12.01000.025.1	25	63	88
2487.12.01000.032.1	32	70	102
2487.12.01000.038.1	38	76	114
2487.12.01000.050.1	50	88	138
2487.12.01000.063.1	63	101	164
2487.12.01000.075.1	75	113	188
2487.12.01000.080.1	80	118	198
2487.12.01000.100.1	100	138	238
2487.12.01000.125.1	125	163	288

Initial spring force
versus charge pressure

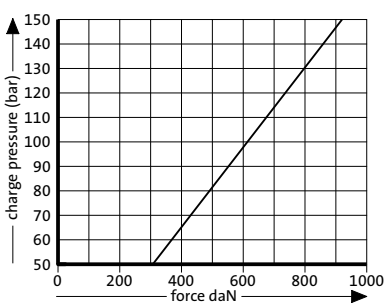

Spring force Diagram displacement versus stroke rise

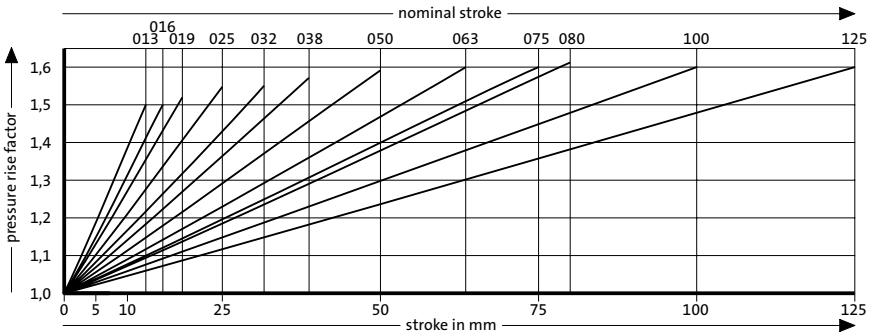

Pressure rise factor accounts for displacement but not external influences!

FIBRO

Gas spring POWERLINE
Mounting variations

2480.011.01000

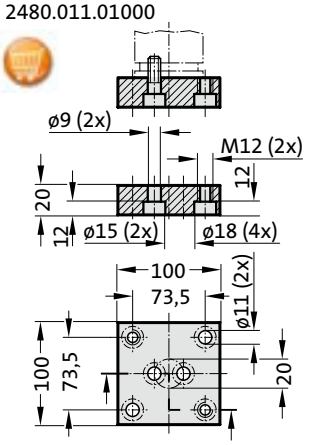

2480.011.01000.2

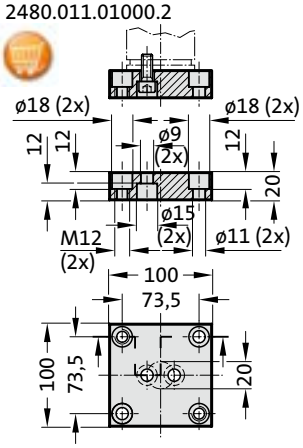

2480.022.01000

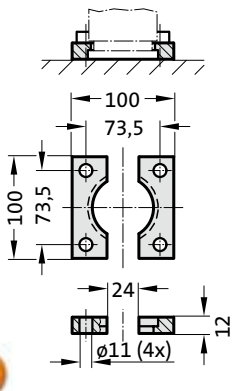

2480.057.01000

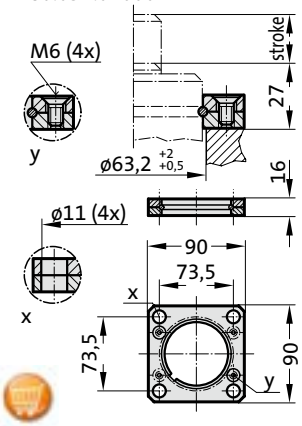

2480.057.03.01000

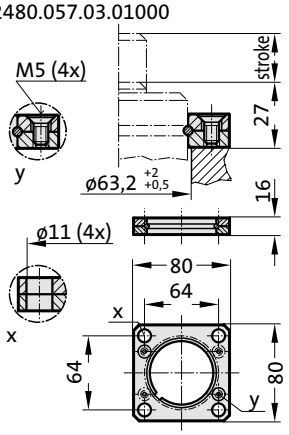

2480.064.01000 [4]

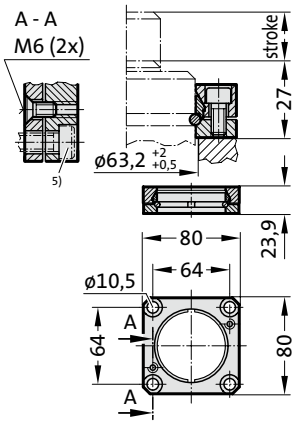

2480.044.03.01000 [2]

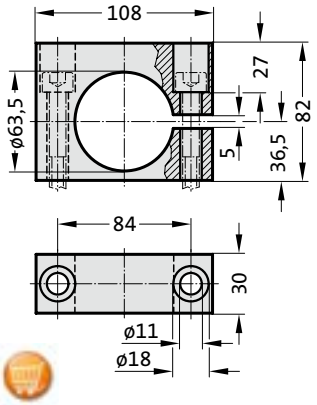

2480.007.01000

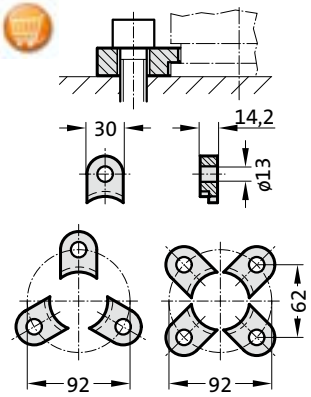

Note:

[2] Attention:
The spring force must be absorbed by the stop surface!

[4] Square collar flange, non-rotating, fixing for composite connection.

[5] Machine screws with hexagonal socket (compact head recommended)

Gas spring POWERLINE

Note:

Initial spring force at 150 bar = 1500 daN

Order No for spare parts kit: 2487.12.01500

Pressure medium: Nitrogen N_2
Max. filling pressure: 150 bar
Min. filling pressure: 25 bar
Working temperature: 0°C to +80°C
Temperature related force increase: ± 0.3%/°C
Max. recommended extensions per minute: approx. 50 to 100 (at 20°C)
Max. piston speed: 1.6 m/s

2487.12.01500.

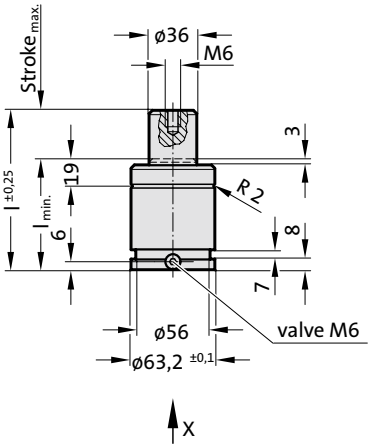

View X

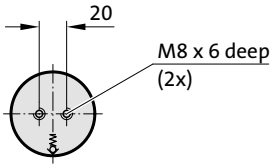



APPROVED PED 97/23/EC | VDI | ISO

S>max | V>max | P>max | Flex Guide™

2487.12.01500.
Gas spring POWERLINE

Order No	Stroke$_{max.}$	l$_{min.}$	l
2487.12.01500.013	13	57	70
2487.12.01500.016	16	60	76
2487.12.01500.019	19	63	82
2487.12.01500.025	25	69	94
2487.12.01500.032	32	76	108
2487.12.01500.038	38	82	120
2487.12.01500.050	50	94	144
2487.12.01500.063	63	107	170
2487.12.01500.075	75	119	194
2487.12.01500.080	80	124	204
2487.12.01500.100	100	144	244
2487.12.01500.125	125	169	294

Initial spring force
versus charge pressure

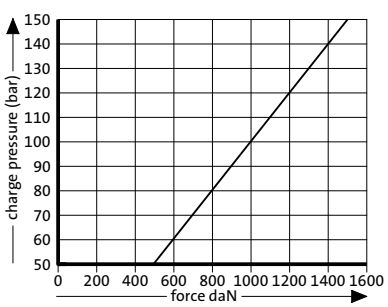

Spring force Diagram displacement versus stroke rise

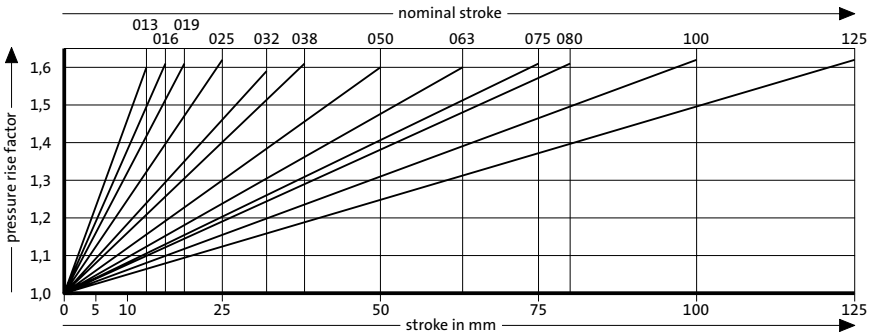

Pressure rise factor accounts for displacement but not external influences!

FIBRO

Gas spring POWERLINE
Mounting variations

2480.011.01500

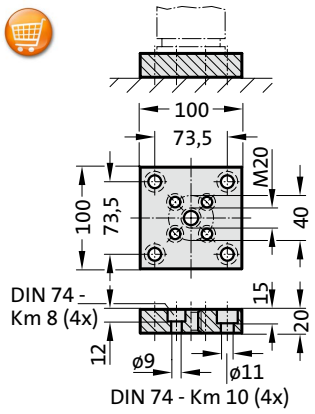

2480.011.01500.2

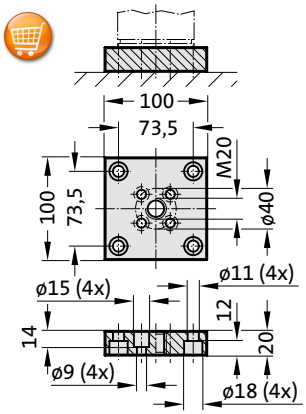

2480.022.01500

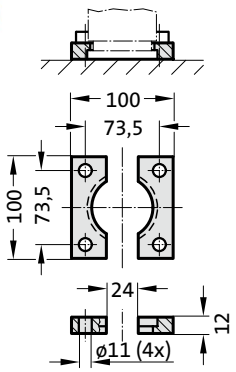

2480.055.01500

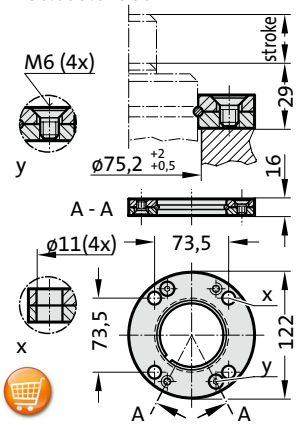

2480.057.01500

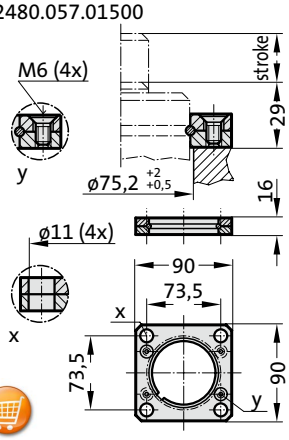

2480.007.01500

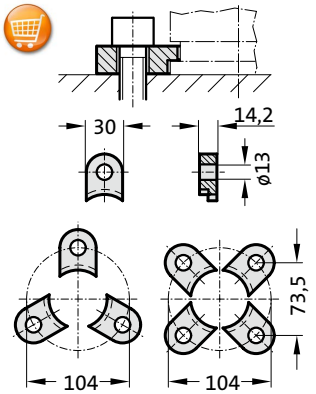

2480.008.01500 3)

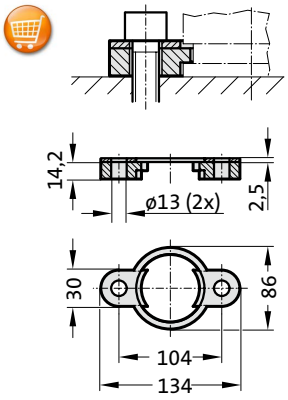

2480.064.01500 4)

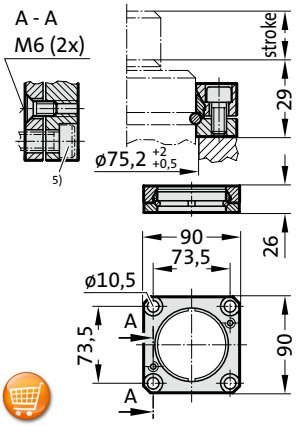

2480.044.01500 2)

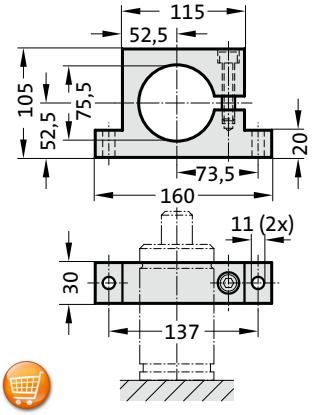

2480.010.01500.130 3)

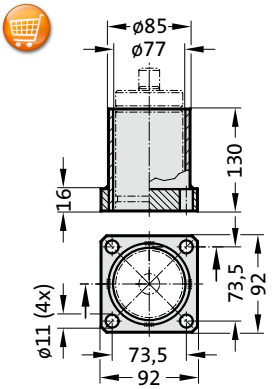

2480.045.01500 2)

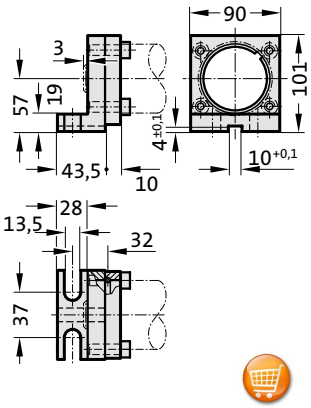

2480.047.01500 2)

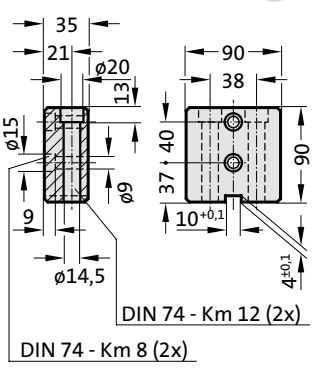

2480.044.03.01500 2)

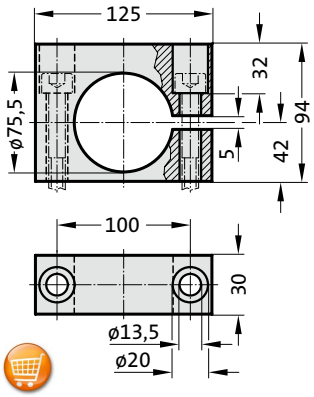

Note:

2) Attention:
The spring force must be absorbed by the stop surface!

3) Not for use with composite connection.

4) Square collar flange, non-rotating, fixing for composite connection.

5) Machine screws with hexagonal socket (compact head recommended)

Gas spring POWERLINE

Note:

Initial spring force at 150 bar = 2400 daN

Order No for spare parts kit: 2487.12.02400

Pressure medium: Nitrogen N_2
Max. filling pressure: 150 bar
Min. filling pressure: 25 bar
Working temperature: 0°C to +80°C
Temperature related force increase: ± 0.3%/°C
Max. recommended extensions per minute: approx. 20 to 100 (at 20°C)
Max. piston speed: 1.6 m/s

2487.12.02400.

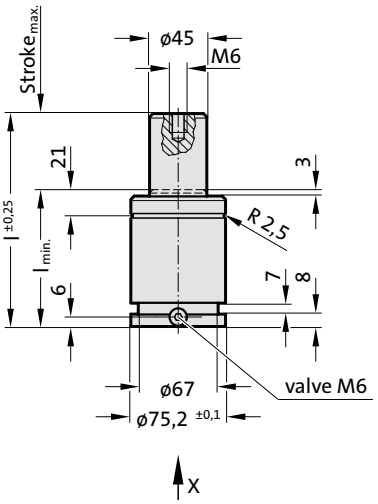

View X

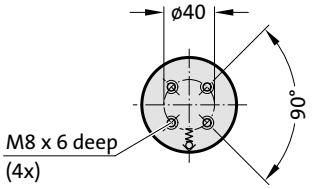



APPROVED PED 97/23/EC | VDI | ISO

S>max | V>max | P>max | Flex Guide™

2487.12.02400.
Gas spring POWERLINE

Order No	Stroke max.	l min.	l
2487.12.02400.016	16	61	77
2487.12.02400.019	19	64	83
2487.12.02400.025	25	70	95
2487.12.02400.032	32	77	109
2487.12.02400.038	38	83	121
2487.12.02400.050	50	95	145
2487.12.02400.063	63	108	171
2487.12.02400.075	75	120	195
2487.12.02400.080	80	125	205
2487.12.02400.100	100	145	245
2487.12.02400.125	125	170	295

Initial spring force
versus charge pressure

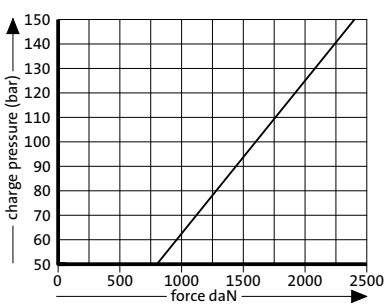

Spring force Diagram displacement versus stroke rise

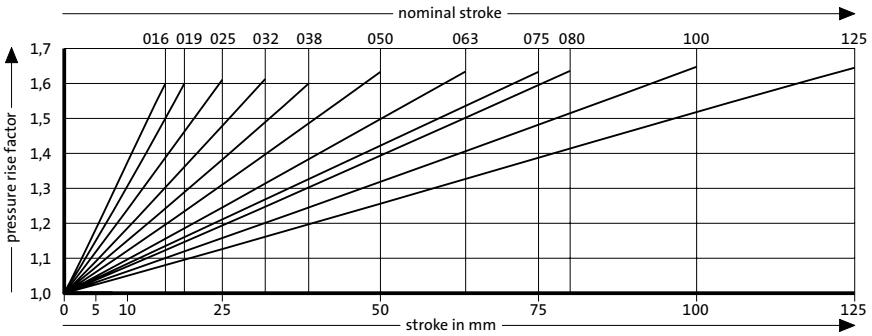

Pressure rise factor accounts for displacement but not external influences!

FIBRO

Gas spring POWERLINE
Mounting variations

2480.011.03000

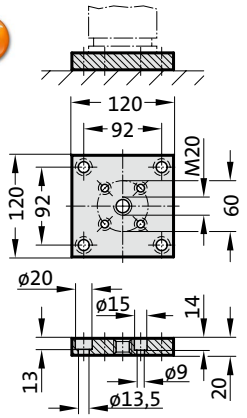

2480.011.03000.2

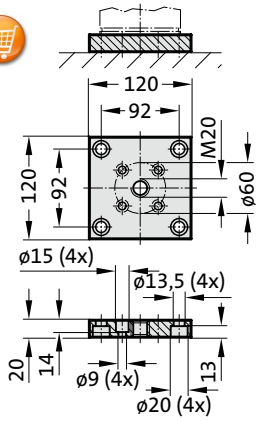

2480.022.03000

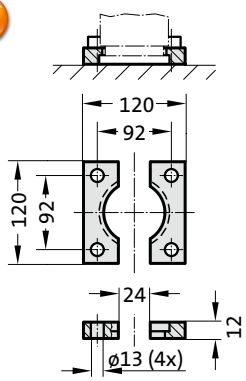

2480.055.03000

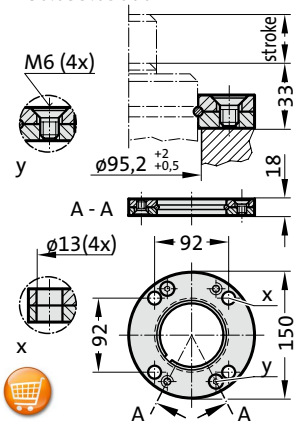

2480.057.03000

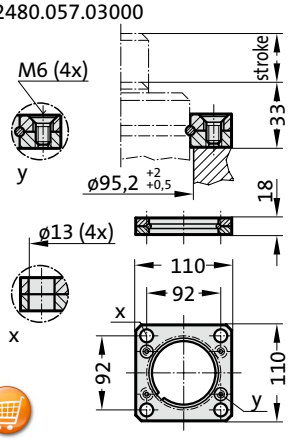

2480.007.03000

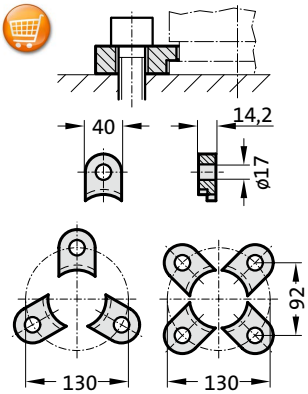

2480.008.03000 3)

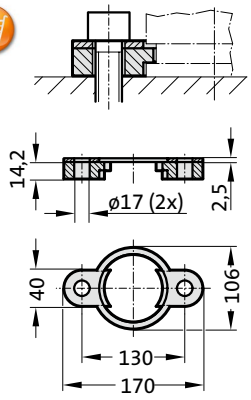

2480.064.03000 4)

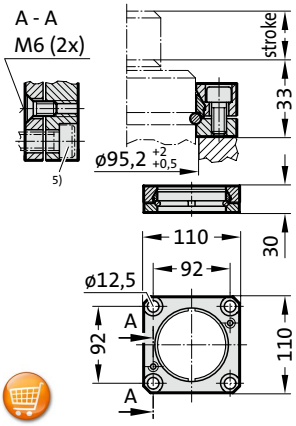

2480.044.03000 2)

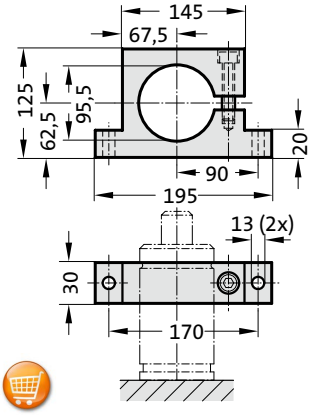

2480.010.03000.140 3)

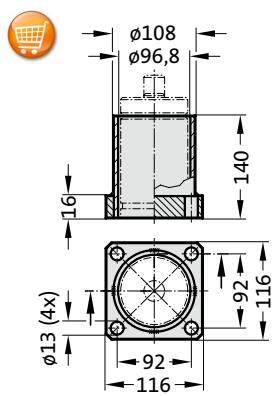

2480.045.03000 2)

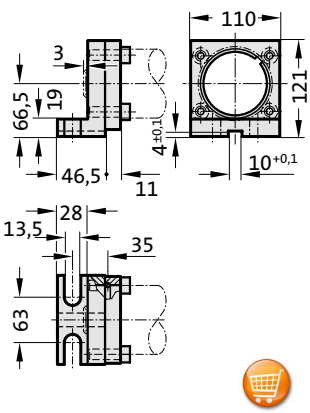

2480.047.03000 2)

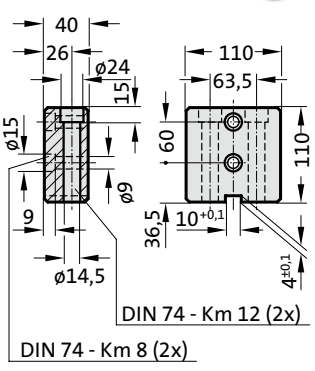

2480.044.03.03000 2)

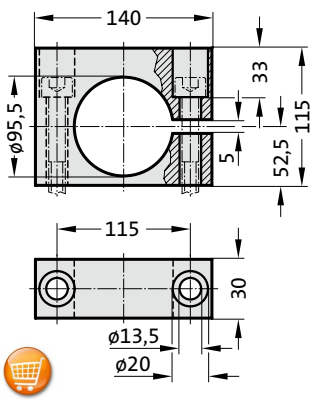

Note:

2) Attention:
The spring force must be absorbed by the stop surface!

3) Not for use with composite connection.

4) Square collar flange, non-rotating, fixing for composite connection.

5) Machine screws with hexagonal socket (compact head recommended)

Gas spring POWERLINE

Note:
Initial spring force at 150 bar = 4200 daN

Order No for spare parts kit: 2487.12.04200

Pressure medium: Nitrogen N_2
Max. filling pressure: 150 bar
Min. filling pressure: 25 bar
Working temperature: 0°C to +80°C
Temperature related force increase: ± 0.3%/°C
Max. recommended extensions per minute: approx. 20 to 100 (at 20°C)
Max. piston speed: 1.6 m/s

2487.12.04200.

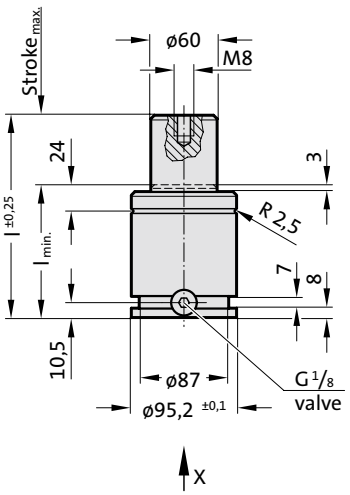



APPROVED PED 97/23/EC | VDI | ISO

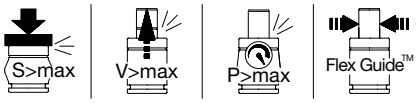

View X

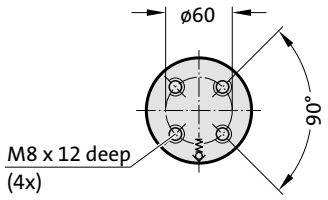

2487.12.04200.
Gas spring POWERLINE

Order No	Stroke$_{max.}$	l$_{min.}$	l
2487.12.04200.016	16	74	90
2487.12.04200.019	19	77	96
2487.12.04200.025	25	83	108
2487.12.04200.032	32	90	122
2487.12.04200.038	38	96	134
2487.12.04200.050	50	108	158
2487.12.04200.063	63	121	184
2487.12.04200.075	75	133	208
2487.12.04200.080	80	138	218
2487.12.04200.100	100	158	258
2487.12.04200.125	125	183	308

Initial spring force
versus charge pressure

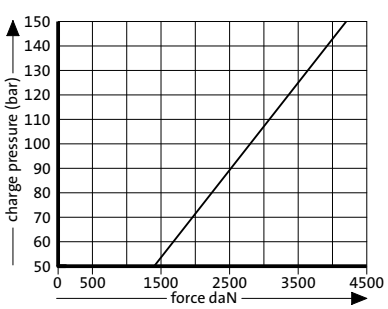

Spring force Diagram displacement versus stroke rise

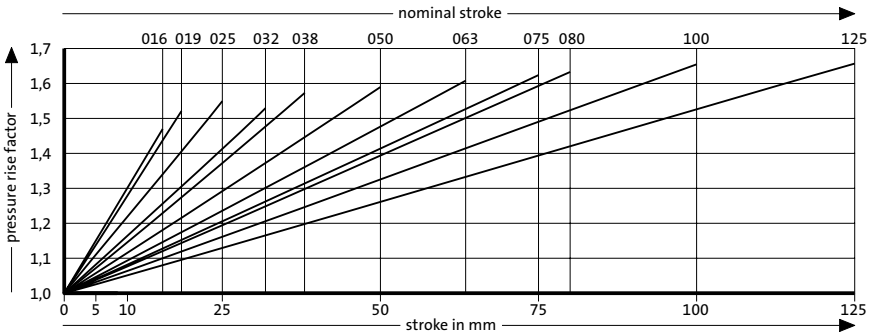

Pressure rise factor accounts for displacement but not external influences!

FIBRO

Gas spring POWERLINE
Mounting variations

2480.011.05000

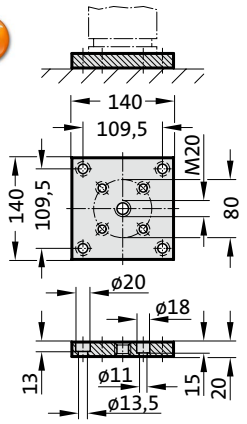

2480.011.05000.2

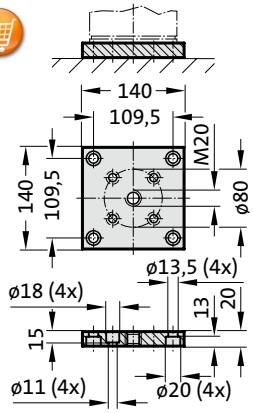

2480.022.05000

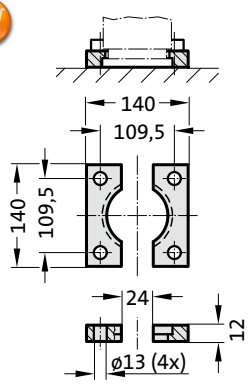

2480.055.05000

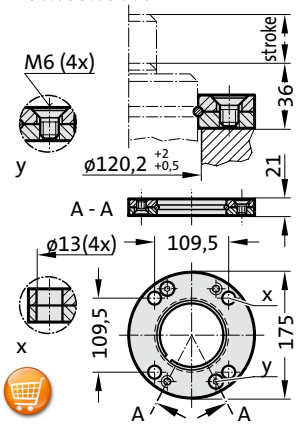

2480.057.05000

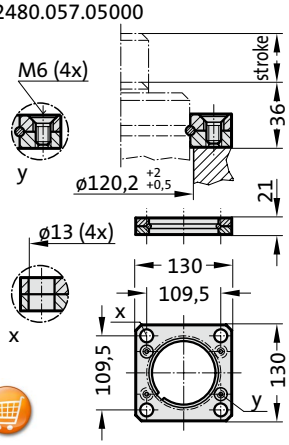

2480.007.05000

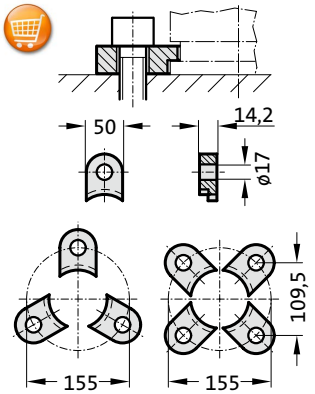

2480.008.05000 3)

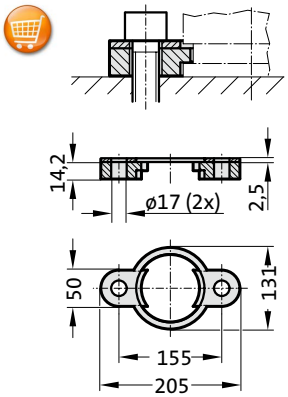

2480.064.05000 4)

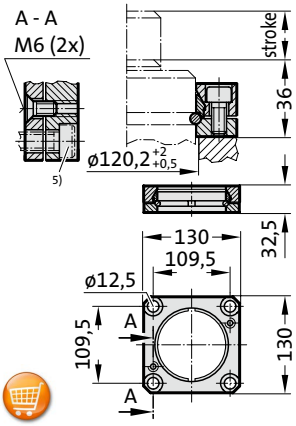

2480.044.05000 2)

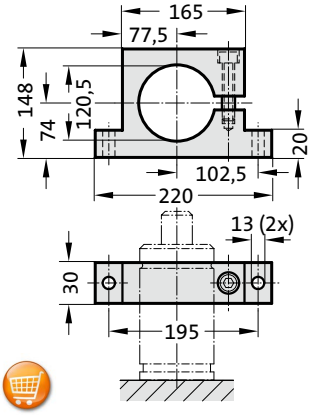

2480.010.05000.160 3)

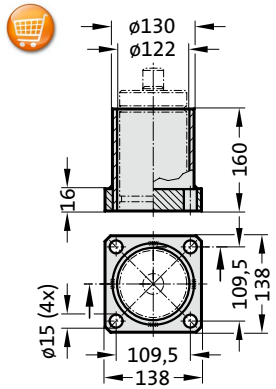

2480.045.05000 2)

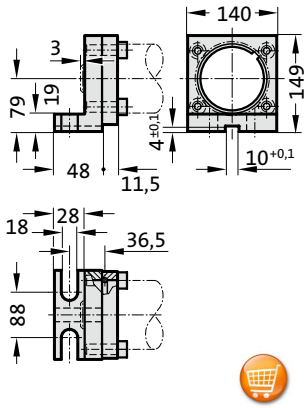

2480.047.05000 2)

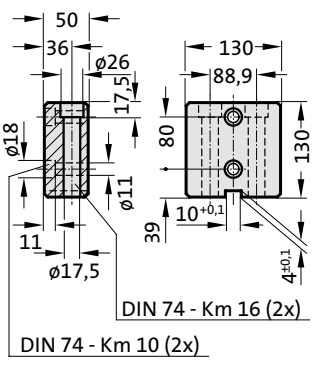

2480.044.03.05000 2)

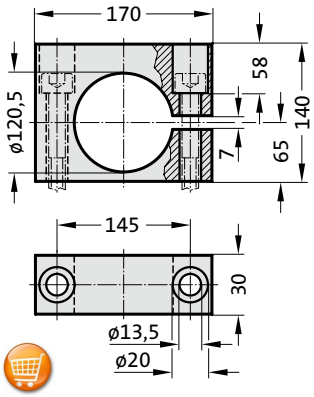

Note:

2) Attention:
The spring force must be absorbed by the stop surface!

3) Not for use with composite connection.

4) Square collar flange, non-rotating, fixing for composite connection.

5) Machine screws with hexagonal socket (compact head recommended)

Gas spring POWERLINE

Note:

Initial spring force at 150 bar = 6630 daN

Order No for spare parts kit: 2487.12.06600

Pressure medium: Nitrogen N_2
Max. filling pressure: 150 bar
Min. filling pressure: 25 bar
Working temperature: 0°C to +80°C
Temperature related force increase: ± 0.3%/°C
Max. recommended extensions per minute: approx. 20 to 100 (at 20°C)
Max. piston speed: 1.6 m/s

2487.12.06600.

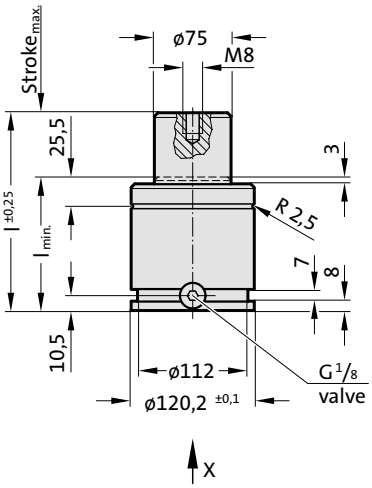



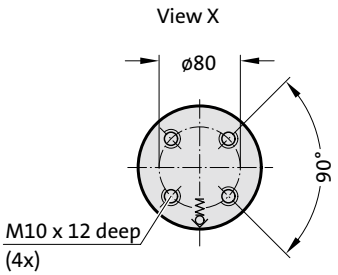

APPROVED PED 97/23/EC | VDI | ISO

S>max | V>max | P>max | Flex Guide™

2487.12.06600.
Gas spring POWERLINE

Order No	Stroke max.	l min.	l
2487.12.06600.016	16	84	100
2487.12.06600.019	19	87	106
2487.12.06600.025	25	93	118
2487.12.06600.032	32	100	132
2487.12.06600.038	38	106	144
2487.12.06600.050	50	118	168
2487.12.06600.063	63	131	194
2487.12.06600.075	75	143	218
2487.12.06600.080	80	148	228
2487.12.06600.100	100	168	268
2487.12.06600.125	125	193	318

Initial spring force
versus charge pressure

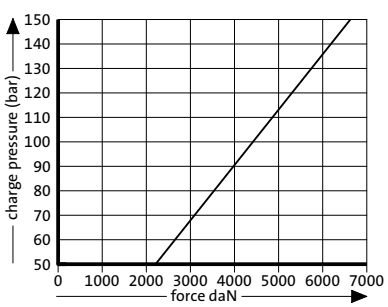

Spring force Diagram displacement versus stroke rise

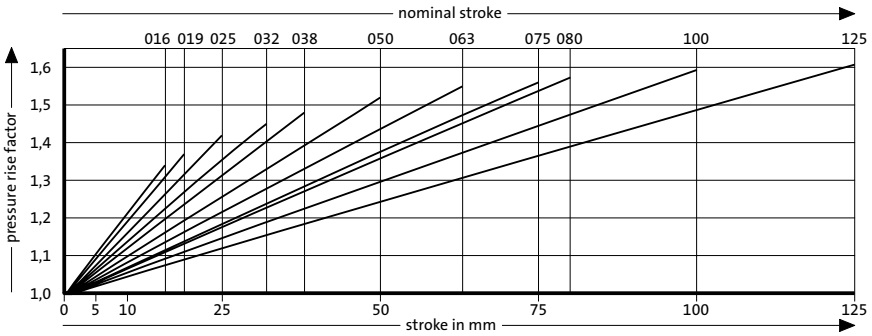

Pressure rise factor accounts for displacement but not external influences!

Gas spring POWERLINE
Mounting variations

2480.011.07500

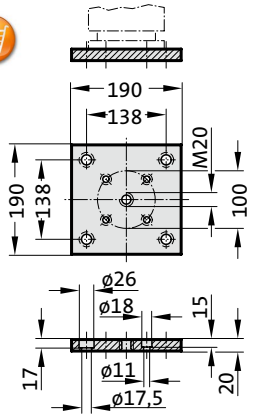

2480.011.07500.2

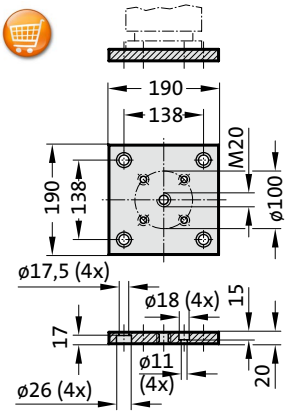

2480.022.07500

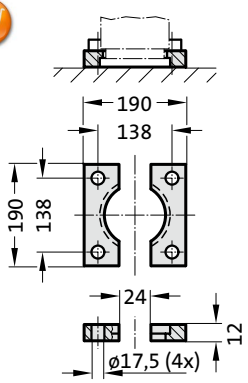

2480.055.07500

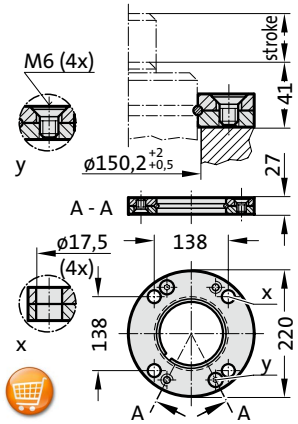

2480.057.07500

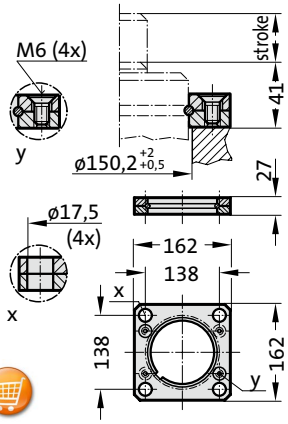

2480.007.07500

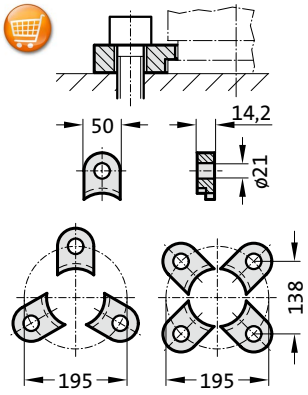

2480.008.07500 [3]

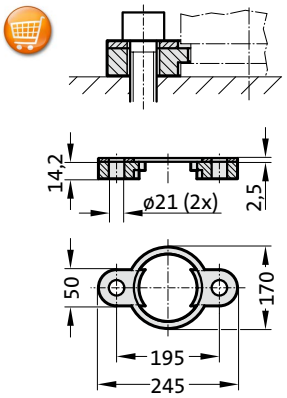

2480.064.07500 [4]

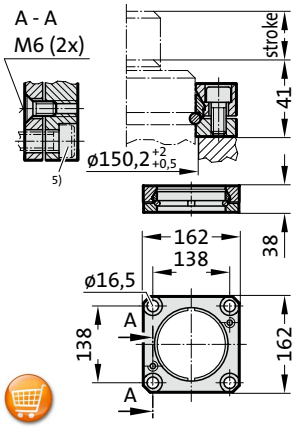

2480.044.07500 [2]

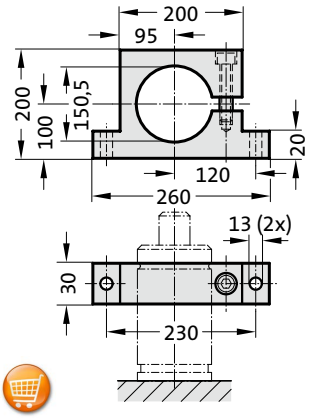

2480.044.03.07500 [2]

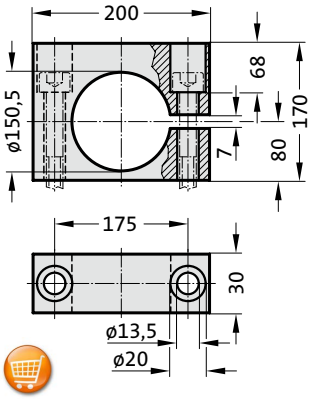

Note:

[2] Attention:
The spring force must be absorbed by the stop surface.

[3] Note:
Not for use with composite connection.

[4] Square collar flange, non-rotating, fixing for composite connection.

[5] Machine screws with hexa-gonal socket (compact head recommended).

Gas spring POWERLINE

Note:

Initial spring force at 150 bar = 9500 daN

Order No for spare parts kit: 2487.12.09500

Pressure medium: Nitrogen N_2
Max. filling pressure: 150 bar
Min. filling pressure: 25 bar
Working temperature: 0°C to +80°C
Temperature related force increase: ± 0.3%/°C
Max. recommended extensions per minute: approx. 20 to 100 (at 20°C)
Max. piston speed: 1.6 m/s

2487.12.09500.

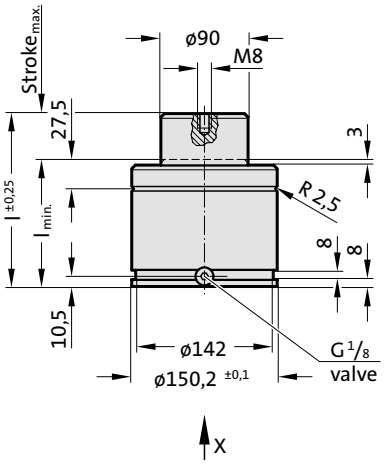



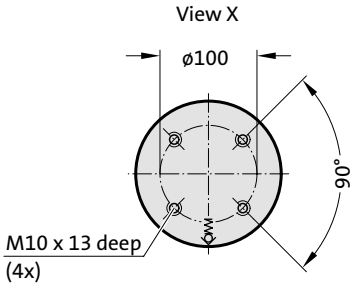

APPROVED PED 97/23/EC | VDI | ISO

S>max | V>max | P>max | Flex Guide™

2487.12.09500.
Gas spring POWERLINE

Order No	Stroke max.	l min.	l
2487.12.09500.019	19	97	116
2487.12.09500.025	25	103	128
2487.12.09500.032	32	110	142
2487.12.09500.038	38	116	154
2487.12.09500.050	50	128	178
2487.12.09500.063	63	141	204
2487.12.09500.075	75	153	228
2487.12.09500.080	80	158	238
2487.12.09500.100	100	178	278
2487.12.09500.125	125	203	328

Initial spring force
versus charge pressure

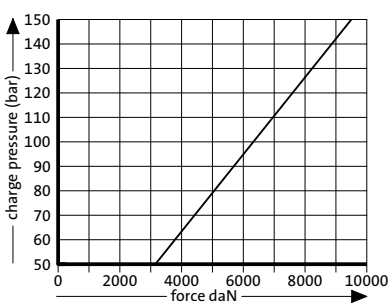

Spring force Diagram displacement versus stroke rise

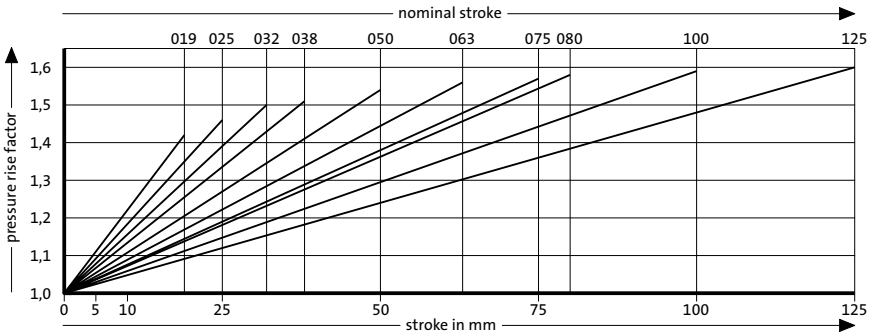

Pressure rise factor accounts for displacement but not external influences!

FIBRO

Gas spring POWERLINE
Mounting variations

2480.011.10000.2

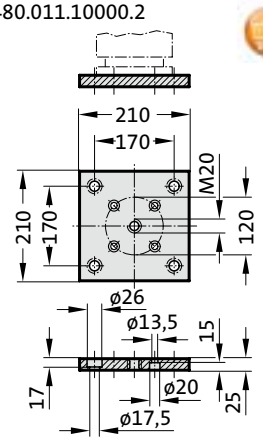

2480.011.10000

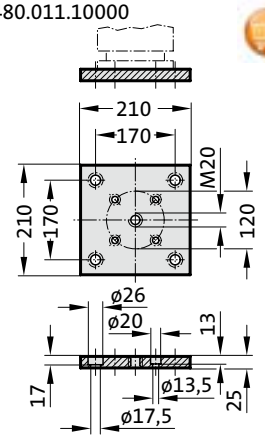

2480.022.10000

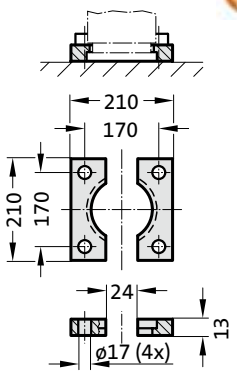

2480.057.10000

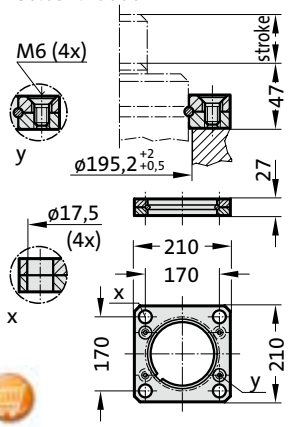

2480.007.10000

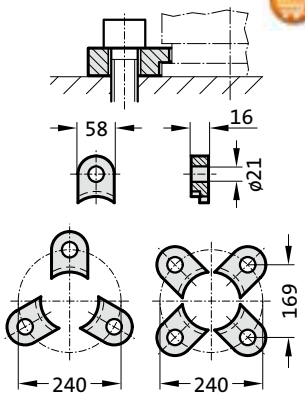

Gas spring POWERLINE

Note:

Initial spring force at 150 bar = 20000 daN

Order No for spare parts kit: 2487.12.20000

Pressure medium: Nitrogen N_2
Max. filling pressure: 150 bar
Min. filling pressure: 25 bar
Working temperature: 0°C to +80°C
Temperature related force increase: ± 0.3%/°C
Max. recommended extensions per minute: approx. 10 to 100 (at 20°C)
Max. piston speed: 1.6 m/s

2487.12.20000.

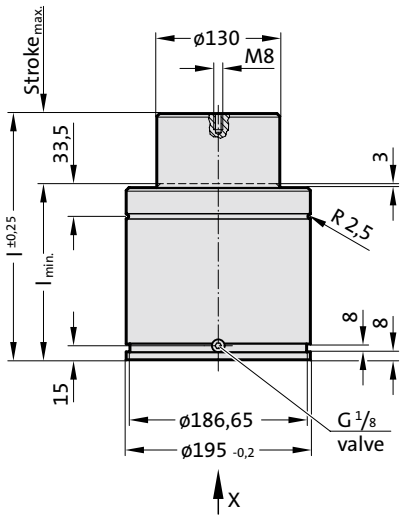



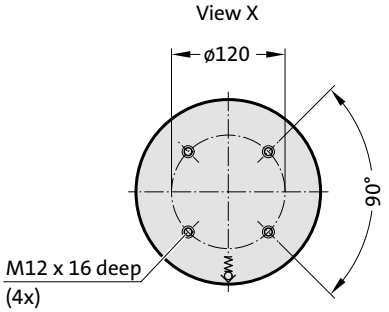

S>max V>max P>max Flex Guide™

2487.12.20000.
Gas spring POWERLINE

Order No	Stroke max.	l min.	l
2487.12.20000.019	19	129	148
2487.12.20000.025	25	135	160
2487.12.20000.032	32	142	174
2487.12.20000.038	38	148	186
2487.12.20000.050	50	160	210
2487.12.20000.063	63	173	236
2487.12.20000.075	75	185	260
2487.12.20000.080	80	190	270
2487.12.20000.100	100	210	310
2487.12.20000.125	125	235	360

Initial spring force
versus charge pressure

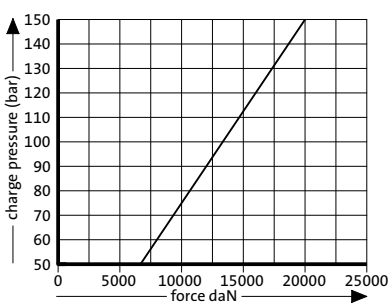

Spring force Diagram displacement versus stroke rise

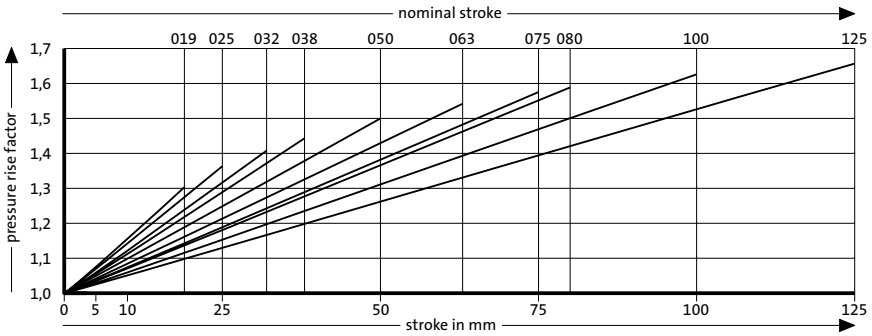

Pressure rise factor accounts for displacement but not external influences!



Compact Gas springs for small displacement and high forces

Compact gas spring
Mounting variations

2480.053.00150

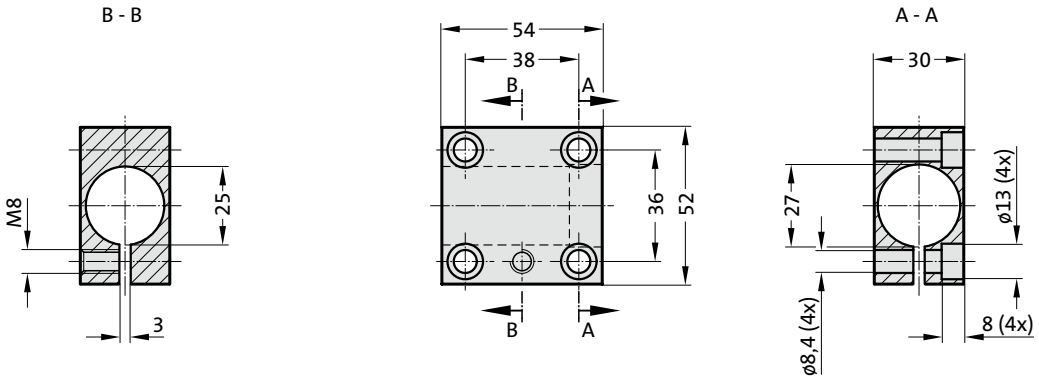

2480.051.00150

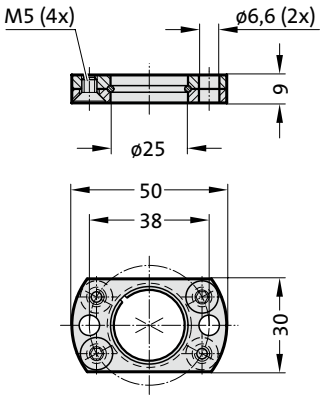

Mounting examples:

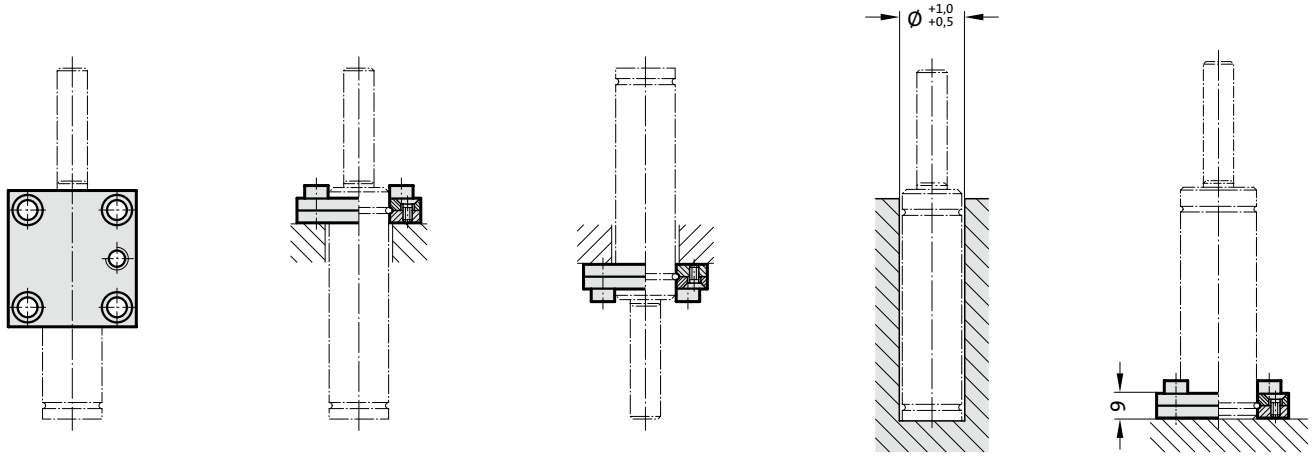

subject to alterations

Compact gas spring

Note:
Initial spring force at 150 bar = 420 daN

Worn gas springs cannot be repaired, they have to be replaced completely.

Pressure medium: Nitrogen N_2
Max. filling pressure: 150 bar
Min. filling pressure: 25 bar
Working temperature: 0°C to +80°C
Temperature related force increase: ± 0.3%/°C
Max. recommended extensions per minute: approx. 50 to 100 (at 20°C)
Max. piston speed: 0.8 m/s

2490.14.00420.

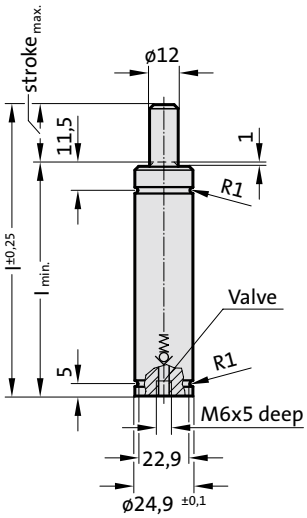



APPROVED PED 97/23/EC

V>max

Flex Guide™

2490.14.00420.
Compact gas spring

Order No	Stroke max.	l min.	l
2490.14.00420.006	6	50	56
2490.14.00420.010	10	60	70
2490.14.00420.016	16	75	91
2490.14.00420.025	25	95	120
2490.14.00420.032	32	108	140
2490.14.00420.040	40	125	165
2490.14.00420.050	50	145	195

Initial spring force versus charge pressure

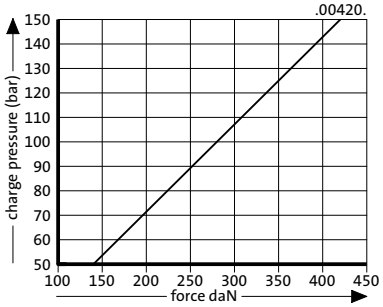

Spring force Diagram displacement versus stroke rise

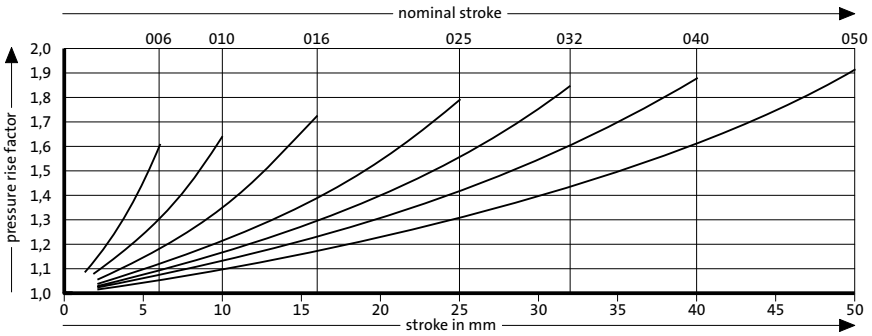

Pressure rise factor accounts for displacement but not external influences!

Compact gas spring
Mounting variations

2480.055.00150

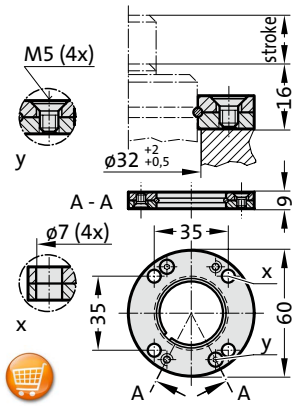

2480.057.00150

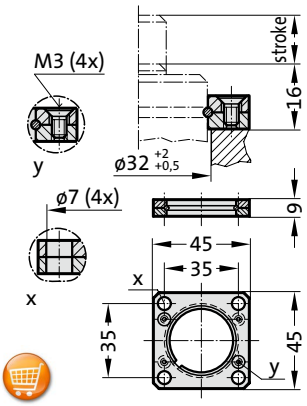

2480.044.03.00150 [2)]

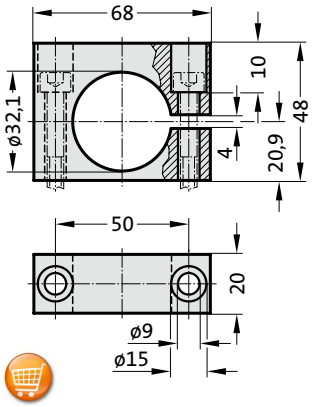

Note:

[2)] Attention:
The spring force must be absorbed by the stop surface!

Mounting examples:

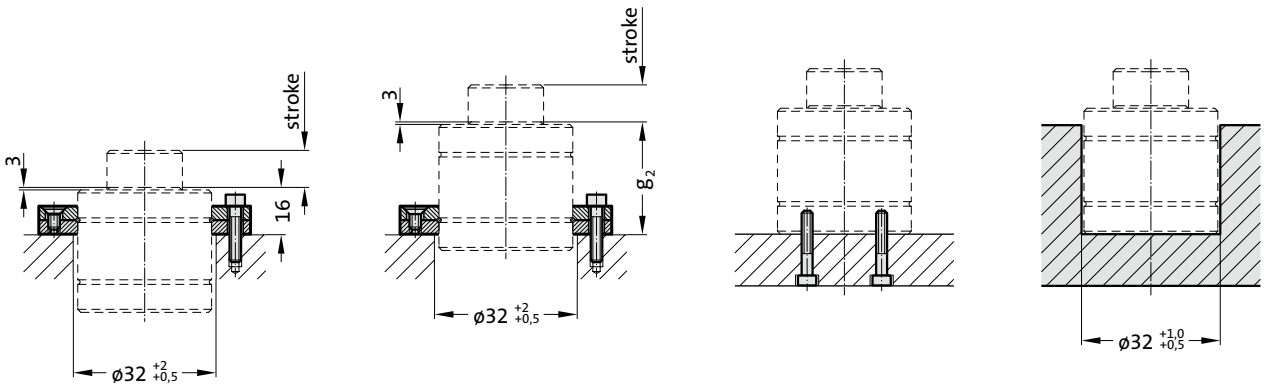

subject to alterations

Compact gas spring

Note:

Initial spring force at 150 bar = 750 daN

Worn gas springs cannot be repaired, they have to be replaced completely.

When mounting to floor, contact over the entire floor of the cylinder tube must be ensured!

Pressure medium: Nitrogen N_2
Max. filling pressure: 150 bar
Min. filling pressure: 25 bar
Working temperature: 0°C to +80°C
Temperature related force increase: ± 0.3%/°C
Max. recommended extensions per minute: approx. 50 to 100 (at 20°C)
Max. piston speed: 0.8 m/s

2490.14.00750.

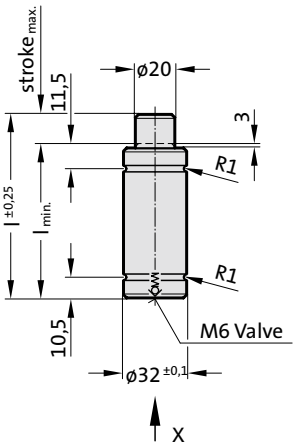

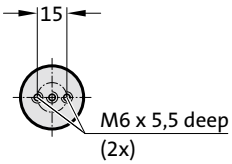

View X



APPROVED PED 97/23/EC

S>max V>max P>max Flex Guide™

2490.14.00750.
Compact gas spring

Order No	Stroke max.	l min.	l	g2*
2490.14.00750.006	6	57	63	51
2490.14.00750.010	10	65	75	59
2490.14.00750.016	16	77	93	71
2490.14.00750.025	25	95	120	89
2490.14.00750.032	32	108	140	102
2490.14.00750.040	40	125	165	119
2490.14.00750.050	50	145	195	139

*see mounting example

Initial spring force
versus charge pressure

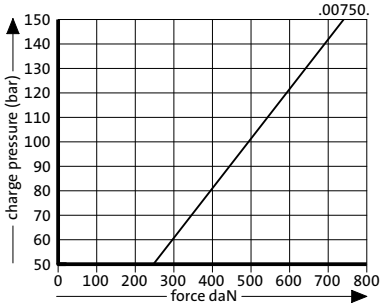

Spring force Diagram displacement versus stroke rise

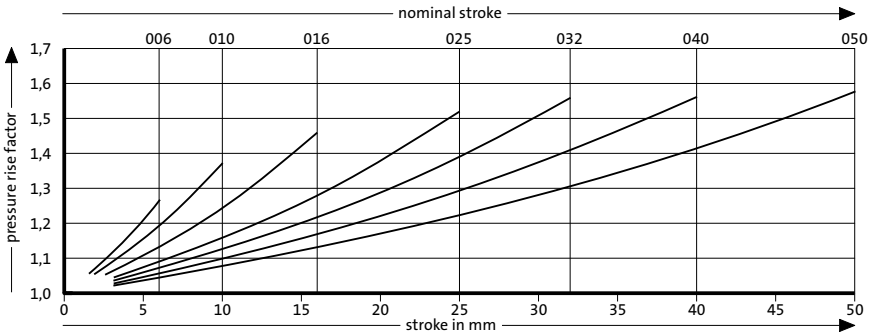

Pressure rise factor accounts for displacement but not external influences!

Compact gas spring
Mounting variations

2480.052.01000

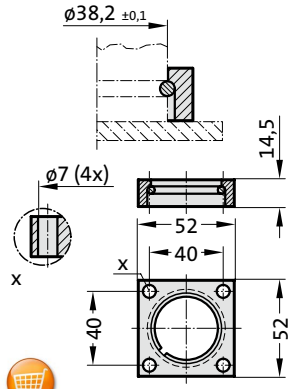

2480.022.00250

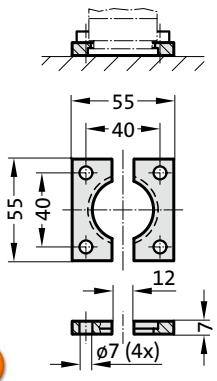

2480.055.00250

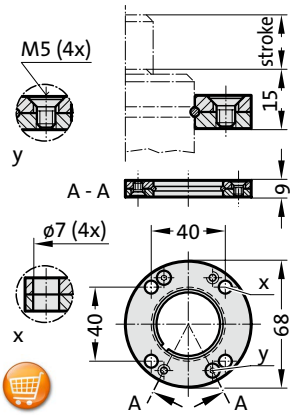

2480.057.00250

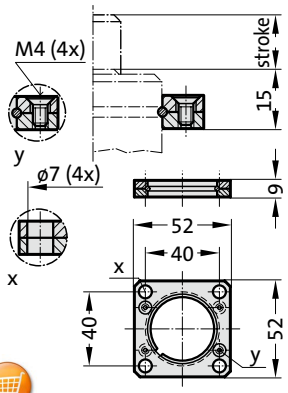

2480.044.03.00250 [2)]

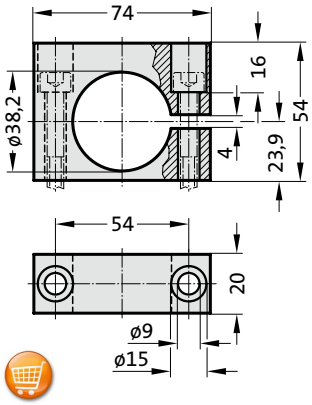

2480.044.00250 [2)]

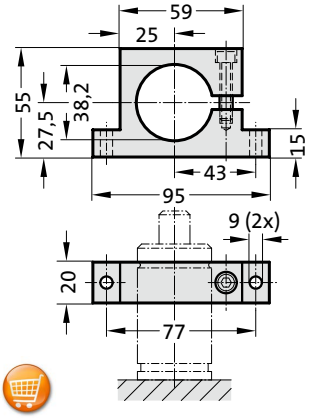

Note:

[2)] Attention:
The spring force must be absorbed by the stop surface!

Mounting Example:

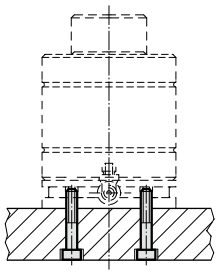

with Adapter Baseplate

Mounting examples:

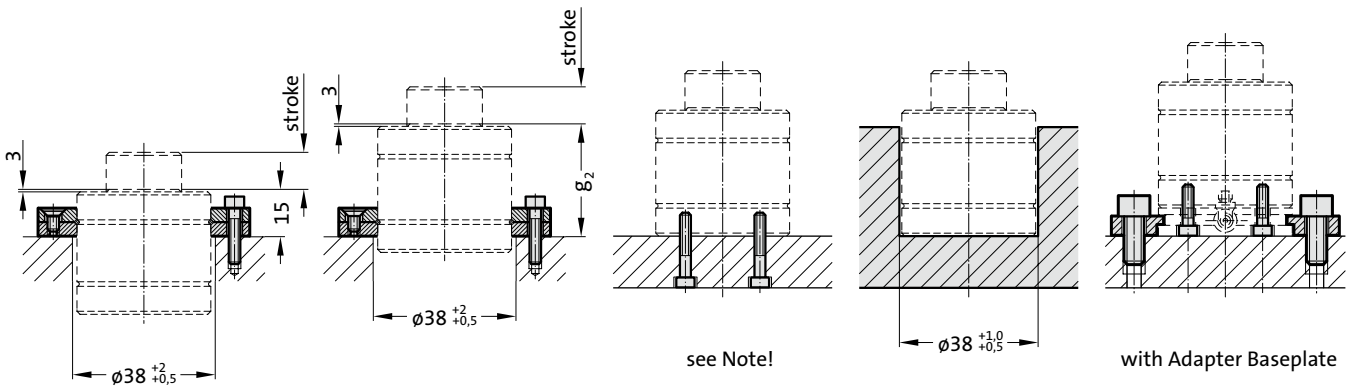

subject to alterations

Compact gas spring

Note:
Initial spring force at 150 bar = 1000 daN

Order No for spare parts kit: 2490.14.01000

When mounting to floor, contact over the entire floor of the cylinder tube must beensured!
Before fitting the adapter base plate remove the valve from the gas spring.
If vibration occurs, tighten the fixing screws accordingly.

Pressure medium: Nitrogen N_2
Max. filling pressure: 150 bar
Min. filling pressure: 25 bar
Working temperature: 0°C to +80°C
Temperature related force increase: ± 0.3%/°C
Max. recommended extensions per minute: approx. 100 (at 20°C)
Max. piston speed: 0.8 m/s

2490.14.01000.

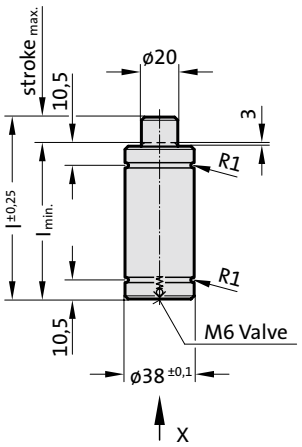



2480.00.20.01000
Adapter baseplate with connecting fitting, without valve (only for use with composite connections)

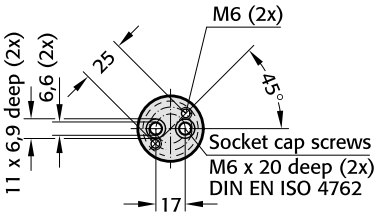

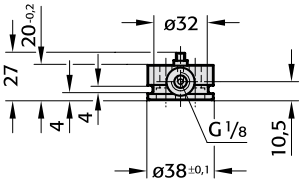

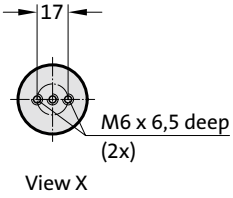

View X

APPROVED PED 97/23/EC

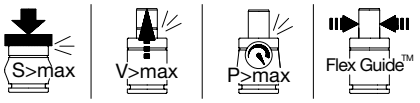

2490.14.01000.
Compact gas spring

Order No	Stroke$_{max.}$	l$_{min.}$	l	g$_2$*
2490.14.01000.006	6	55	61	49
2490.14.01000.010	10	68	78	62
2490.14.01000.016	16	84	100	78
2490.14.01000.025	25	110	135	104
2490.14.01000.032	32	135	167	129
2490.14.01000.040	40	155	195	149
2490.14.01000.050	50	180	230	174

*see mounting example

Initial spring force
versus charge pressure

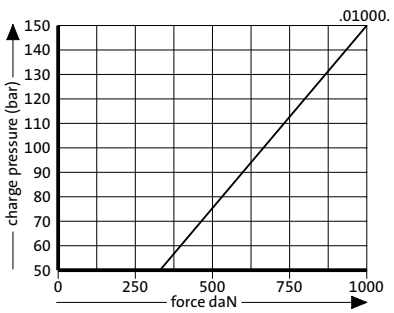

Spring force Diagram displacement versus stroke rise

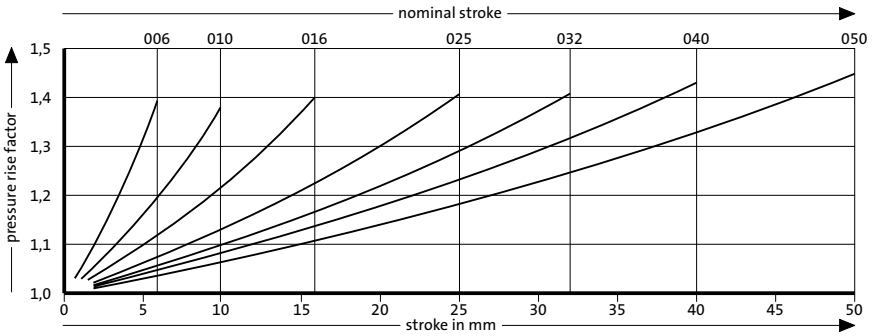

Pressure rise factor accounts for displacement but not external influences!

Compact gas spring
Mounting variations

2480.052.1.01800

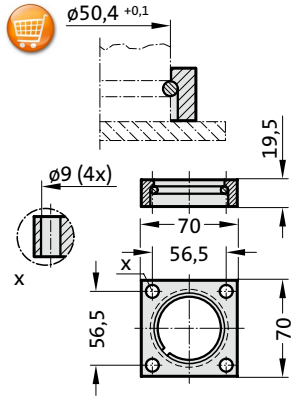

2480.022.00750

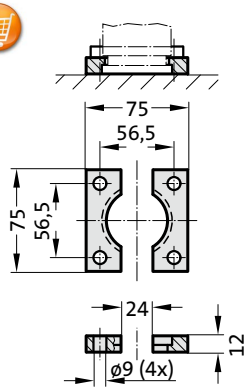

2480.058.00750

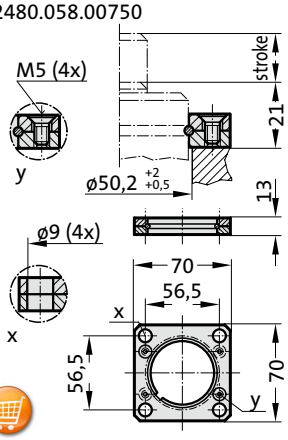

Note:

[2] Attention:
The spring force must be absorbed by the stop surface.

2480.044.00750 [2]

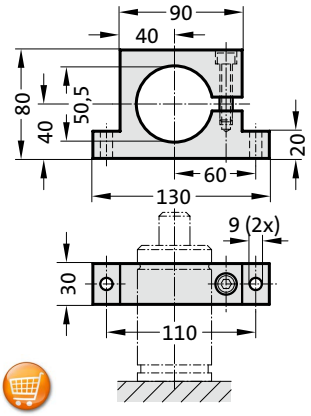

2480.044.03.00750 [2]

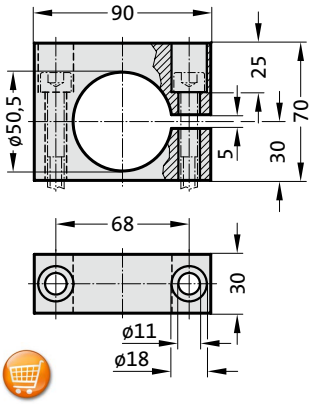

Mounting Example:

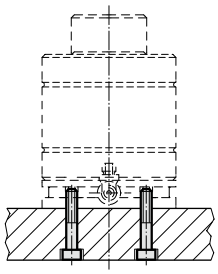

with Adapter Baseplate

Mounting examples:

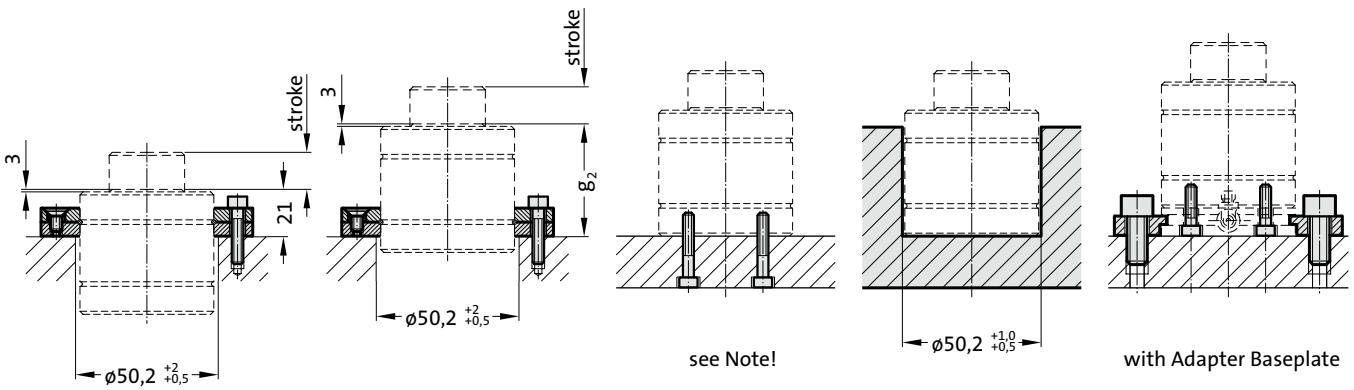

subject to alterations

Compact gas spring

Note:
Initial spring force at 150 bar = 1800 daN

Order No for spare parts kit: 2490.14.01800

When mounting to floor, contact over the entire floor of the cylinder tube must beensured!
Before fitting the adapter base plate remove the valve from the gas spring.
If vibration occurs, tighten the fixing screws accordingly.

Pressure medium: Nitrogen N_2
Max. filling pressure: 150 bar
Min. filling pressure: 25 bar
Working temperature: 0°C to +80°C
Temperature related force increase: ± 0.3%/°C
Max. recommended extensions per minute: approx. 50 to 100 (at 20°C)
Max. piston speed: 0.8 m/s

2490.14.01800.

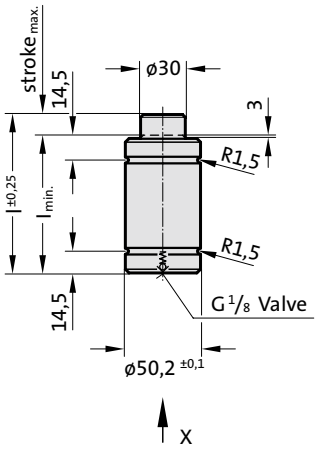



2480.00.20.01800
Adapter baseplate with connecting fitting, without valve (only for use with composite connections)

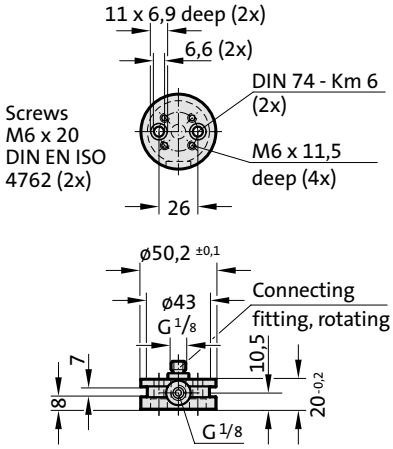

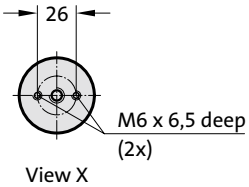

APPROVED PED 97/23/EC

S>max | V>max | P>max | Flex Guide™

2490.14.01800.
Compact gas spring

Order No	Stroke$_{max.}$	l$_{min.}$	l	g$_2$*
2490.14.01800.006	6	60	66	52
2490.14.01800.010	10	70	80	62
2490.14.01800.016	16	90	106	82
2490.14.01800.025	25	110	135	102
2490.14.01800.032	32	130	162	122
2490.14.01800.040	40	150	190	142
2490.14.01800.050	50	170	220	162
2490.14.01800.065	65	206	271	198

*see mounting example

Initial spring force versus charge pressure

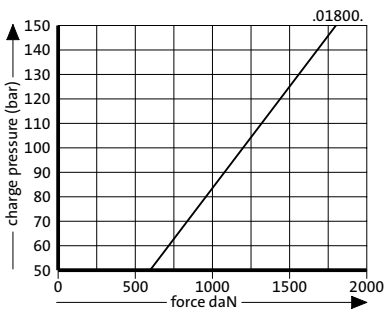

Spring force Diagram displacement versus stroke rise

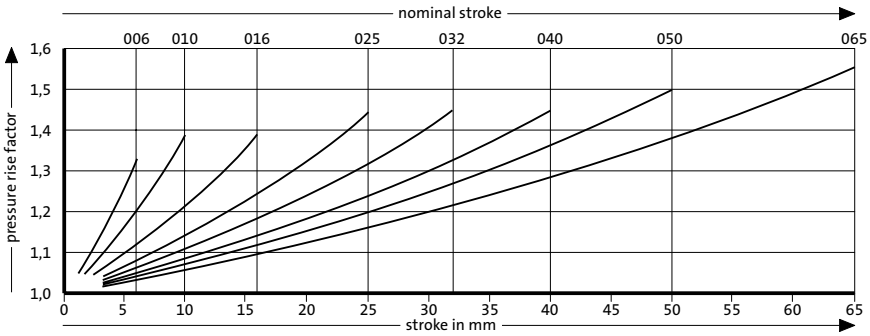

Pressure rise factor accounts for displacement but not external influences!

Compact gas spring
Mounting variations

2480.022.01000

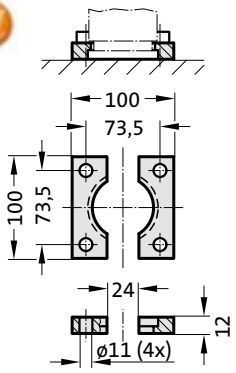

2480.057.03.01000

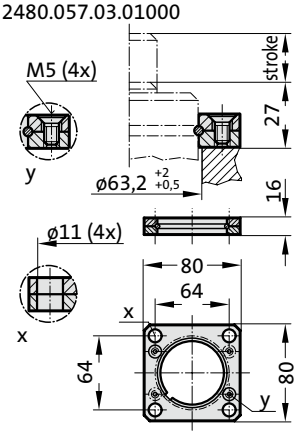

2480.057.01000

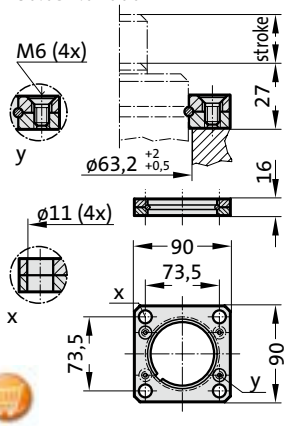

2480.064.01000 [4]

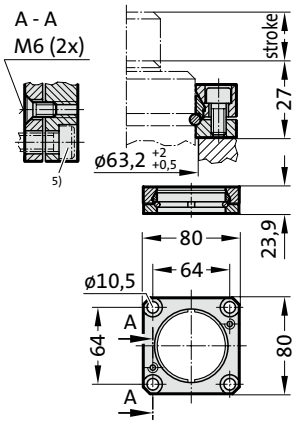

2480.044.03.01000 [2]

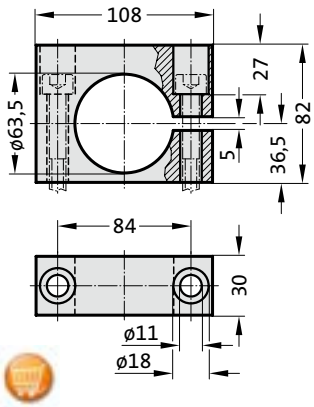

Note:

[2] Attention:
The spring force must be absorbed by the stop surface!

[4] Square collar flange, non-rotating, fixing for composite connection.

[5] Machine screws with hexagonal socket (compact head recommended)

Mounting Example:

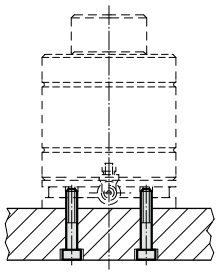

with Adapter Baseplate

Mounting examples:

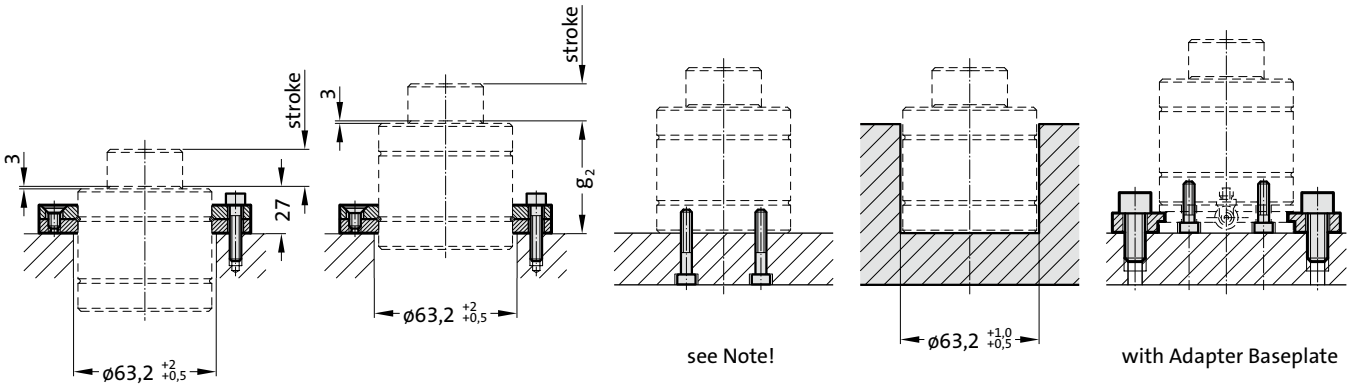

see Note!

with Adapter Baseplate

Compact gas spring

Note:
Initial spring force at 150 bar = 3000 daN

Order No for spare parts kit: 2490.14.03000

When mounting to floor, contact over the entire floor of the cylinder tube must beensured!
Before fitting the adapter base plate remove the valve from the gas spring.
If vibration occurs, tighten the fixing screws accordingly.

Pressure medium: Nitrogen N_2
Max. filling pressure: 150 bar
Min. filling pressure: 25 bar
Working temperature: 0°C to +80°C
Temperature related force increase: ± 0.3%/°C
Max. recommended extensions per minute: approx. 80 to 100 (at 20°C)
Max. piston speed: 0.8 m/s

2490.14.03000.

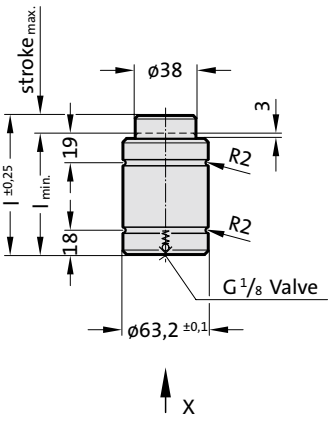



2480.00.20.03000
Adapter baseplate with connecting fitting, without valve (only for use with composite connections)

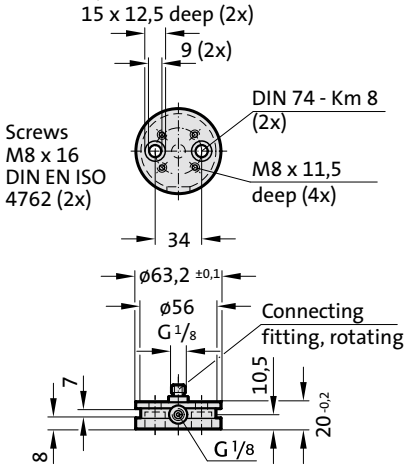

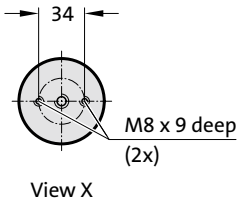

View X

APPROVED PED 97/23/EC

S>max | V>max | P>max | Flex Guide™

2490.14.03000.
Compact gas spring

Order No	Stroke$_{max.}$	l$_{min.}$	l	g$_2$*
2490.14.03000.010	10	75	85	65
2490.14.03000.016	16	87	103	77
2490.14.03000.025	25	105	130	95
2490.14.03000.032	32	118	150	108
2490.14.03000.040	40	135	175	125
2490.14.03000.050	50	155	205	145
2490.14.03000.065	65	191	256	181

*see mounting example

Initial spring force versus charge pressure

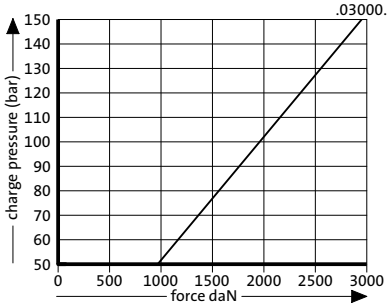

Spring force Diagram displacement versus stroke rise

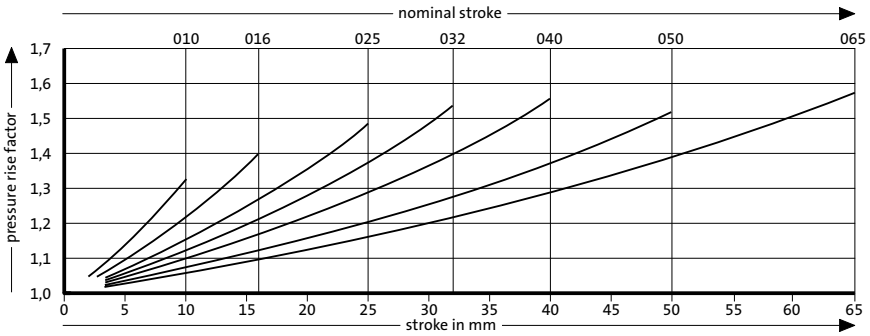

Pressure rise factor accounts for displacement but not external influences!

Compact gas spring
Mounting variations

2480.052.04700

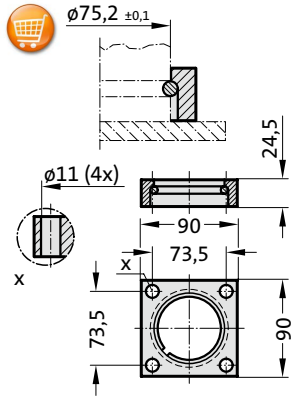

2480.022.01500

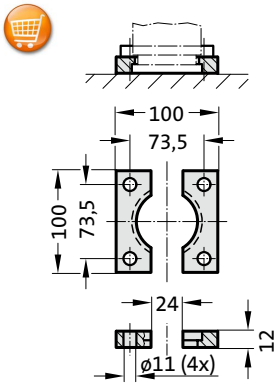

2480.058.01500

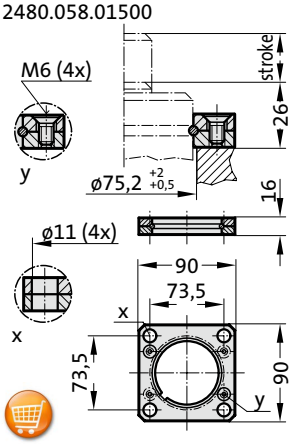

2480.044.03.01500 2)

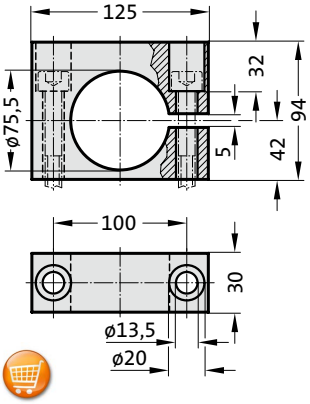

2480.044.01500 2)

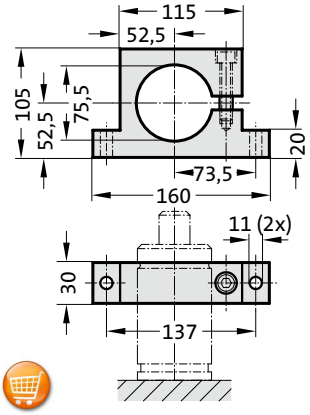

Note:

2) Attention:
The spring force must be absorbed by the stop surface!

Mounting Example:

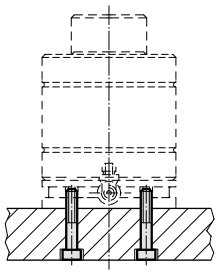

with Adapter Baseplate

Mounting examples:

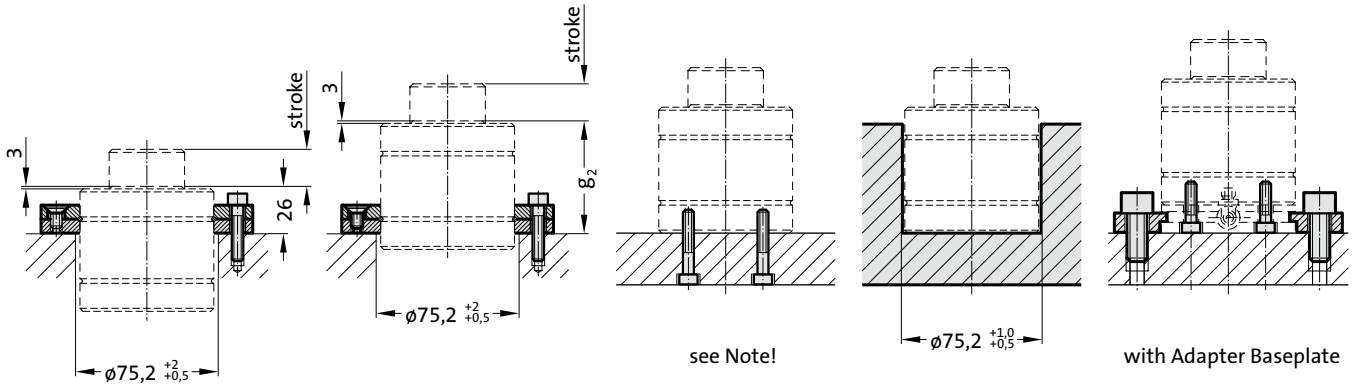

subject to alterations

Compact gas spring

Note:
Initial spring force at 150 bar = 4700 daN

Order No for spare parts kit: 2490.14.04700

When mounting to floor, contact over the entire floor of the cylinder tube must beensured!
Before fitting the adapter base plate remove the valve from the gas spring.
If vibration occurs, tighten the fixing screws accordingly.

Pressure medium: Nitrogen N_2
Max. filling pressure: 150 bar
Min. filling pressure: 25 bar
Working temperature: 0°C to +80°C
Temperature related force increase: ± 0.3%/°C
Max. recommended extensions per minute: approx. 80 to 100 (at 20°C)
Max. piston speed: 0.8 m/s

2490.14.04700.

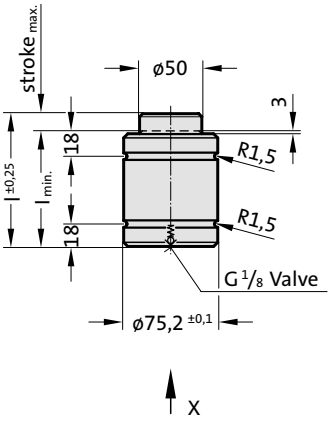



2480.00.20.04700
Adapter baseplate with connecting Fitting

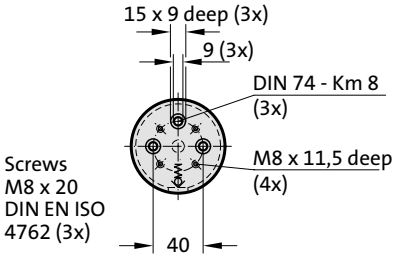

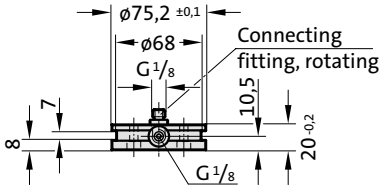

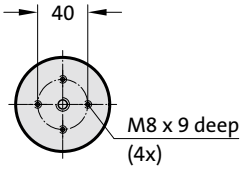

View X

APPROVED PED 97/23/EC

S>max V>max P>max Flex Guide™

2490.14.04700.
Compact gas spring

Order No	Stroke$_{max.}$	$l_{min.}$	l	g_2*
2490.14.04700.010	10	70	80	60
2490.14.04700.016	16	90	106	80
2490.14.04700.025	25	110	135	100
2490.14.04700.032	32	135	167	125
2490.14.04700.040	40	160	200	150
2490.14.04700.050	50	190	240	180
2490.14.04700.065	65	208	273	198

*see mounting example

Initial spring force
versus charge pressure

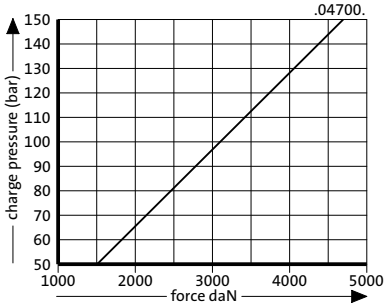

Spring force Diagram displacement versus stroke rise

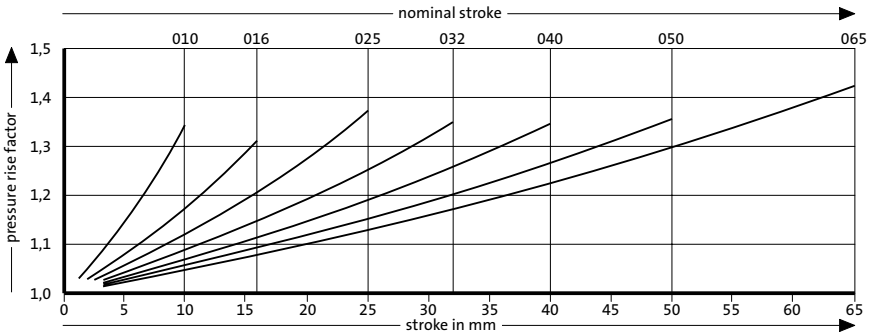

Pressure rise factor accounts for displacement but not external influences!

Compact gas spring
Mounting variations

2480.052.07500

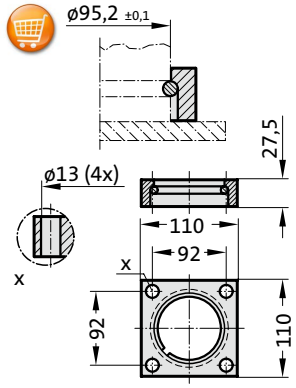

2480.022.03000

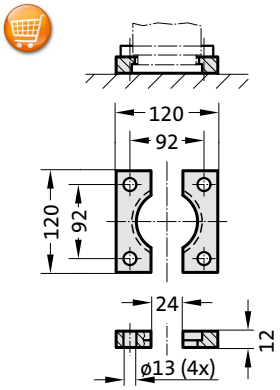

2480.058.03000

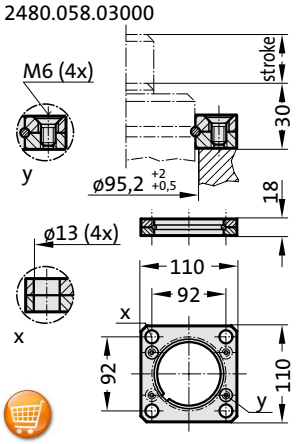

2480.044.03.03000 [2]

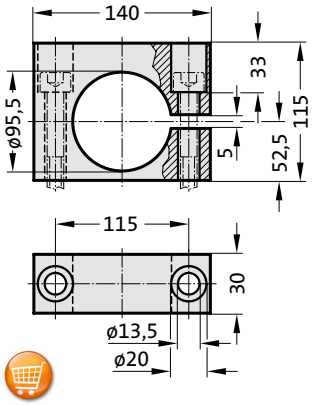

2480.044.03000 [2]

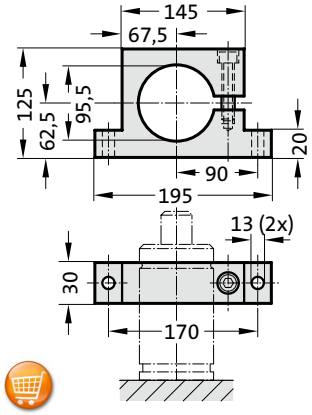

Note:

[2] Attention:
The spring force must be absorbed by the stop surface!

Mounting Example:

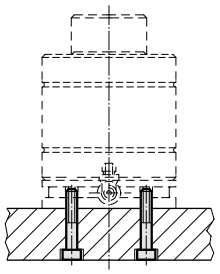

with Adapter Baseplate

Mounting examples:

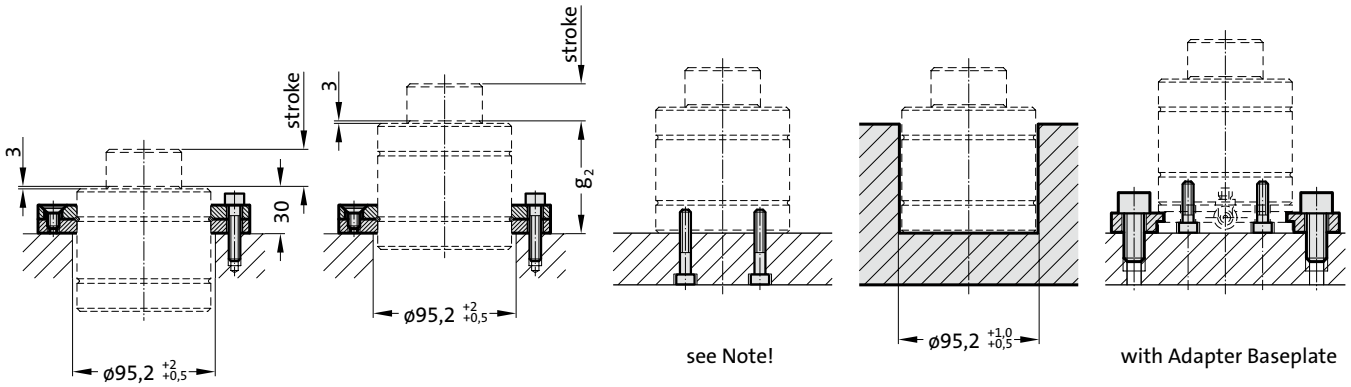

subject to alterations

Compact gas spring

Note:
Initial spring force at 150 bar = 7500 daN

Order No for spare parts kit: 2490.14.07500

When mounting to floor, contact over the entire floor of the cylinder tube must beensured!
Before fitting the adapter base plate remove the valve from the gas spring.
If vibration occurs, tighten the fixing screws accordingly.

Pressure medium: Nitrogen N_2
Max. filling pressure: 150 bar
Min. filling pressure: 25 bar
Working temperature: 0°C to +80°C
Temperature related force increase: ± 0.3%/°C
Max. recommended extensions per minute: approx. 80 to 100 (at 20°C)
Max. piston speed: 0.8 m/s

2490.14.07500.

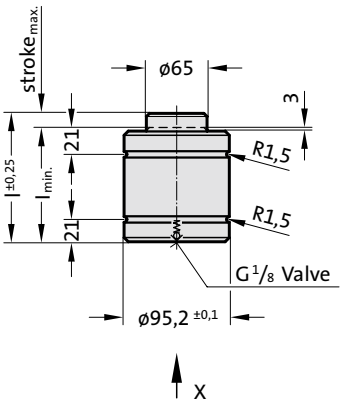



2480.00.20.07500
Adapter baseplate with connecting Fitting

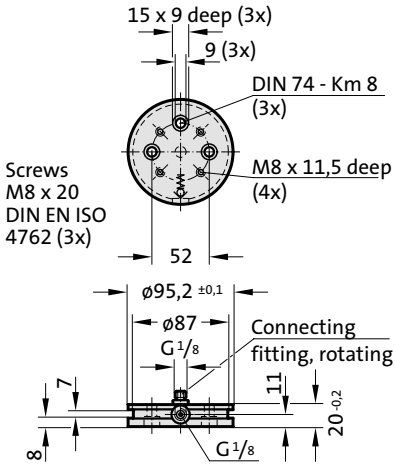

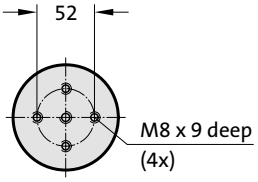

View X

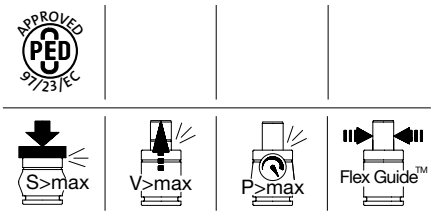

2490.14.07500.
Compact gas spring

Order No	Stroke max.	l min.	l	g2*
2490.14.07500.010	10	80	90	68
2490.14.07500.016	16	100	116	88
2490.14.07500.025	25	120	145	108
2490.14.07500.032	32	150	182	138
2490.14.07500.040	40	170	210	158
2490.14.07500.050	50	205	255	193
2490.14.07500.065	65	214	279	202

*see mounting example

Initial spring force
versus charge pressure

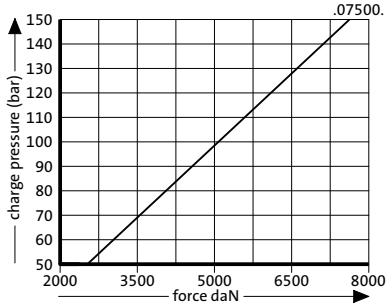

Spring force Diagram displacement versus stroke rise

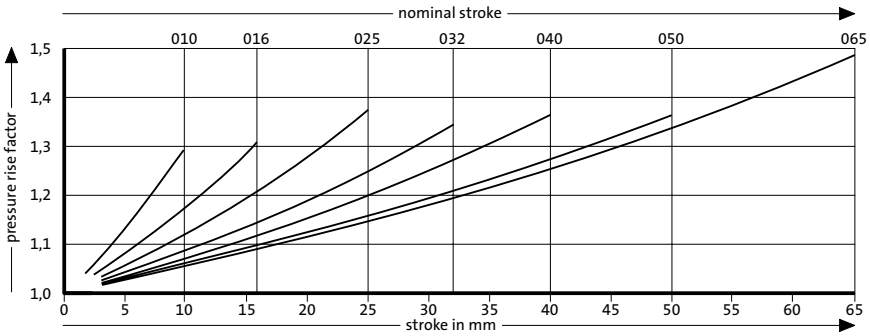

Pressure rise factor accounts for displacement but not external influences!

FIBRO

Compact gas spring
Mounting variations

2480.052.11800

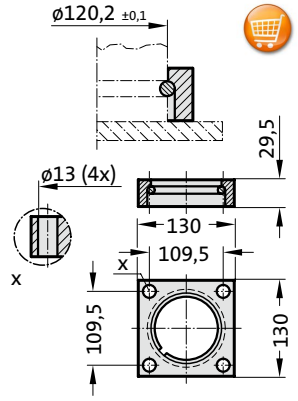

2480.022.05000

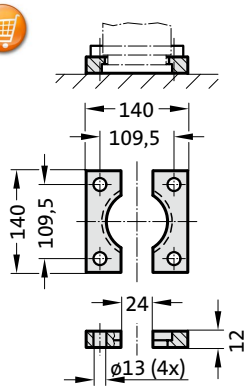

2480.055.05000

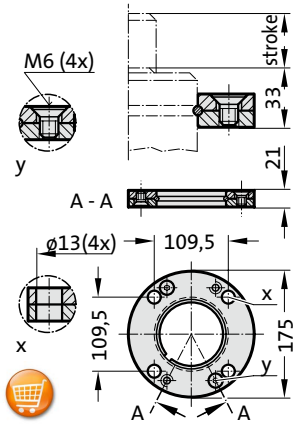

2480.057.05000

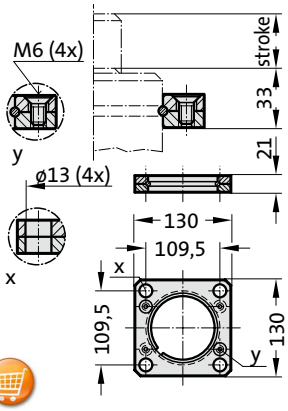

Note:

2) Attention:
The spring force must be absorbed by the stop surface!

4) Square collar flange, non-rotating, fixing for composite connection.

5) Machine screws with hexagonal socket (compact head recommended)

2480.064.05000 4)

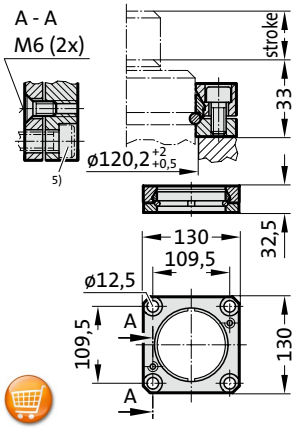

2480.044.05000 2)

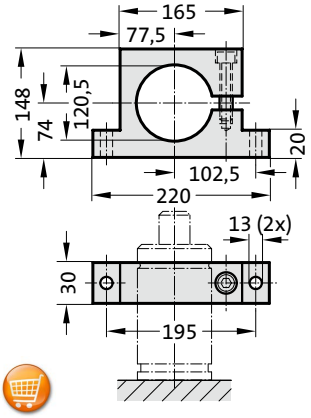

2480.044.03.05000 2)

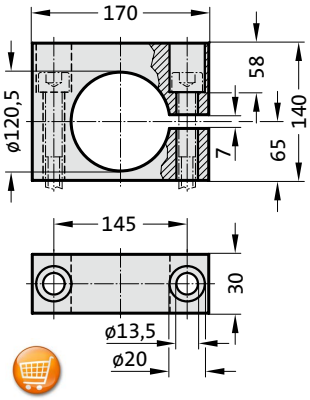

Mounting Example:

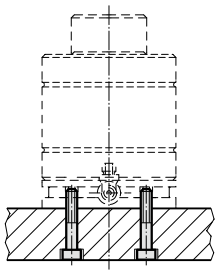

with Adapter Baseplate

Mounting examples:

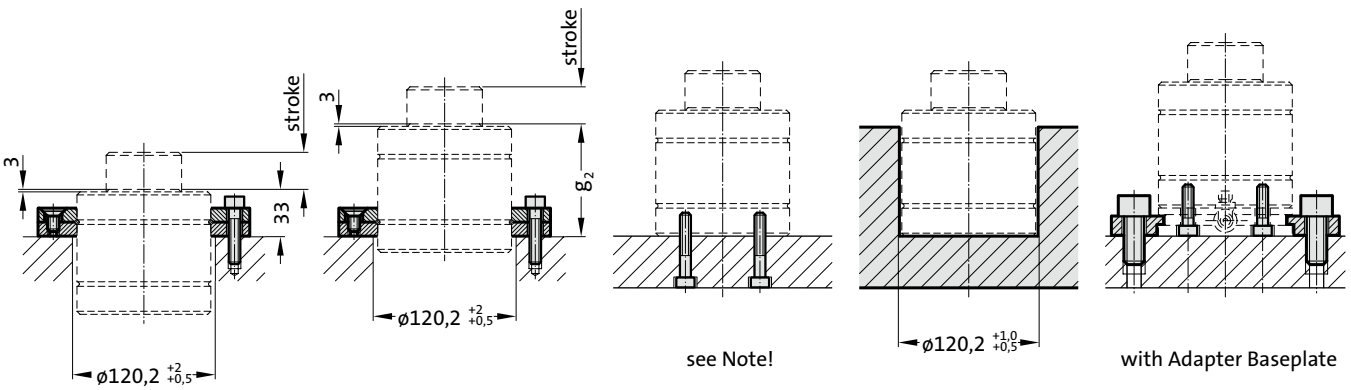

Compact gas spring

Note:

Initial spring force at 150 bar = 11800 daN

Order No for spare parts kit: 2490.14.11800

When mounting to floor, contact over the entire floor of the cylinder tube must beensured!
Before fitting the adapter base plate remove the valve from the gas spring.
If vibration occurs, tighten the fixing screws accordingly.

Pressure medium: Nitrogen N_2
Max. filling pressure: 150 bar
Min. filling pressure: 25 bar
Working temperature: 0°C to +80°C
Temperature related force increase: ± 0.3%/°C
Max. recommended extensions per minute: approx. 80 to 100 (at 20°C)
Max. piston speed: 0.8 m/s

2490.14.11800.

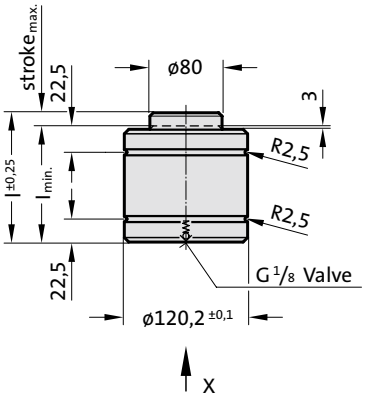



2480.00.20.11800

Adapter baseplate with connecting Fitting

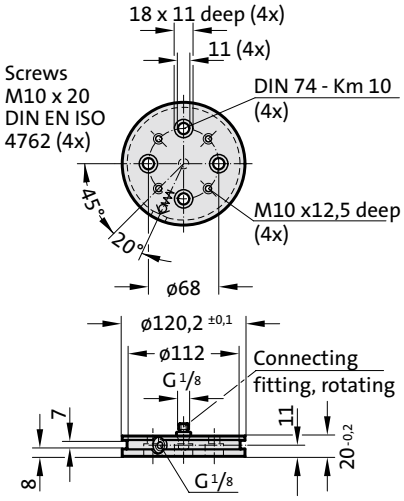

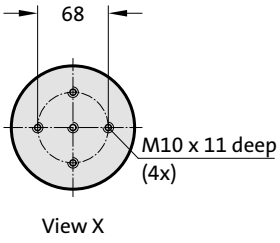

View X

APPROVED PED 97/23/EC

S>max | V>max | P>max | Flex Guide™

2490.14.11800.
Compact gas spring

Order No	Stroke max.	l min.	l	g2*
2490.14.11800.010	10	90	100	78
2490.14.11800.016	16	110	126	98
2490.14.11800.025	25	130	155	118
2490.14.11800.032	32	155	187	143
2490.14.11800.040	40	180	220	168
2490.14.11800.050	50	210	260	198
2490.14.11800.065	65	255	320	243

*see mounting example

Initial spring force
versus charge pressure

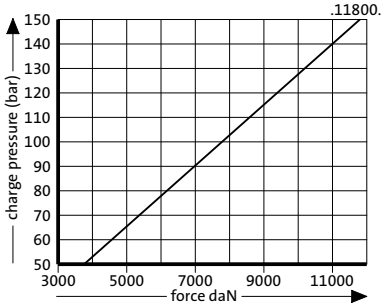

Spring force Diagram displacement versus stroke rise

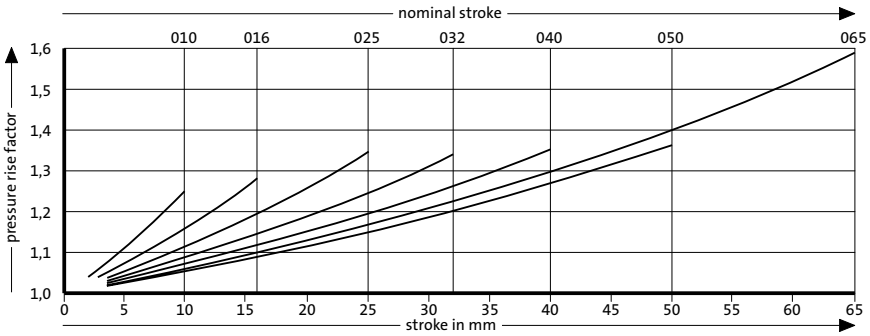

Pressure rise factor accounts for displacement but not external influences!

Compact gas spring
Mounting variations

2480.052.18300

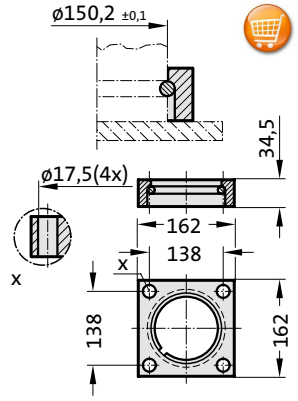

2480.022.07500

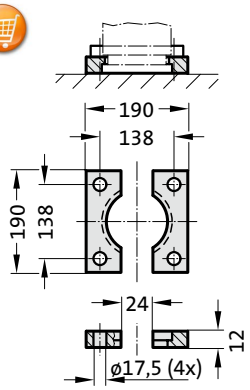

2480.055.07500

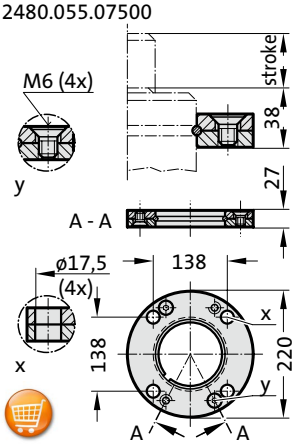

2480.057.07500

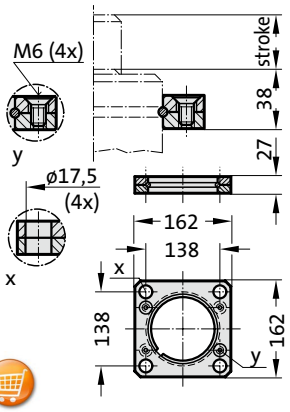

Note:

2) Attention:
The spring force must be absorbed by the stop surface!

4) Square collar flange, non-rotating, fixing for composite connection.

5) Machine screws with hexagonal socket (compact head recommended)

2480.064.07500 4)

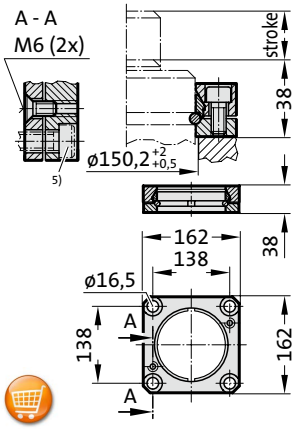

2480.044.07500 2)

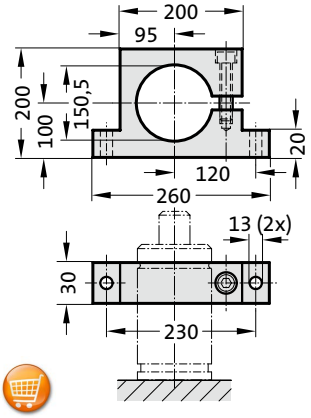

2480.044.03.07500 2)

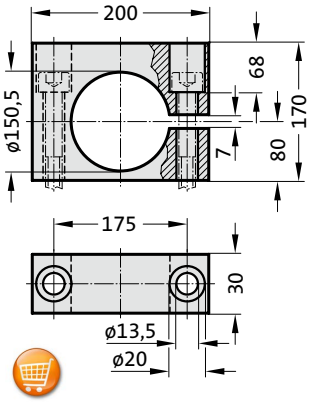

Mounting Example:

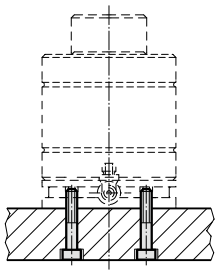

with Adapter Baseplate

Mounting examples:

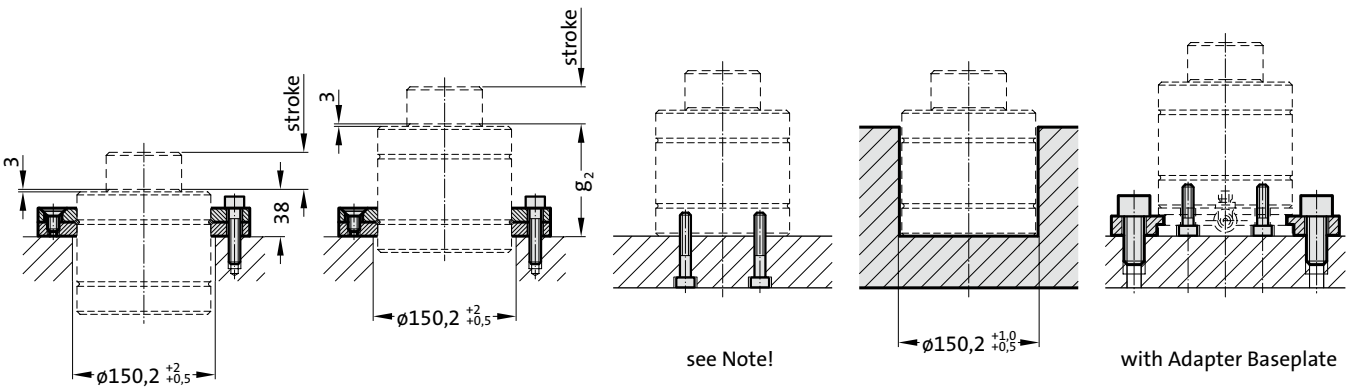

Compact gas spring

Note:

Initial spring force at 150 bar = 18300 daN

Order No for spare parts kit: 2490.14.18300

When mounting to floor, contact over the entire floor of the cylinder tube must beensured!
Before fitting the adapter base plate remove the valve from the gas spring.
If vibration occurs, tighten the fixing screws accordingly.

Pressure medium: Nitrogen N_2
Max. filling pressure: 150 bar
Min. filling pressure: 25 bar
Working temperature: 0°C to +80°C
Temperature related force increase: ± 0.3%/°C
Max. recommended extensions per minute: approx. 80 to 100 (at 20°C)
Max. piston speed: 0.8 m/s

2490.14.18300.

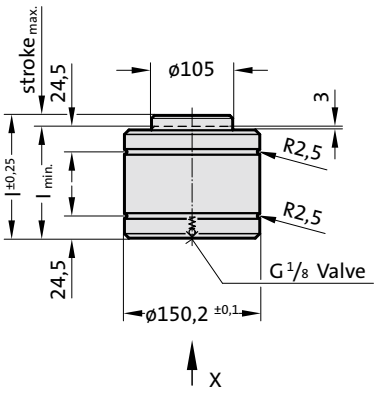



2480.00.20.18300

Adapter baseplate with connecting Fitting

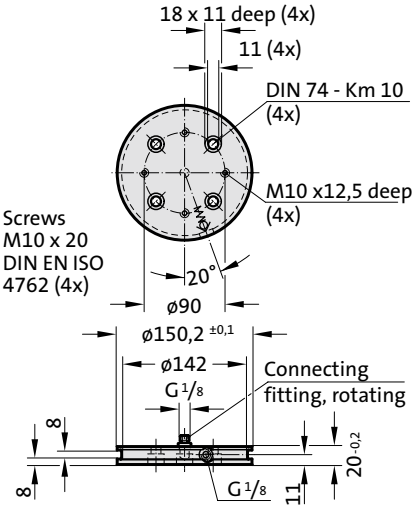

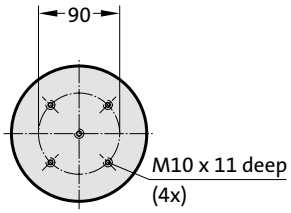

View X

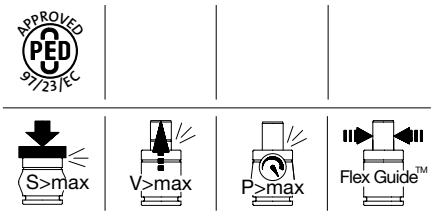

2490.14.18300.
Compact gas spring

Order No	Stroke$_{max.}$	$l_{min.}$	l	g_2*
2490.14.18300.010	10	100	110	89
2490.14.18300.016	16	120	136	109
2490.14.18300.025	25	140	165	129
2490.14.18300.032	32	165	197	154
2490.14.18300.040	40	195	235	184
2490.14.18300.050	50	220	270	209
2490.14.18300.065	65	258	323	247

*see mounting example

Initial spring force
versus charge pressure

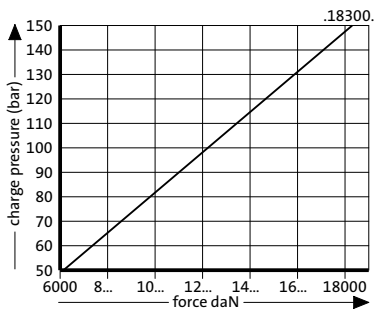

Spring force Diagram displacement versus stroke rise

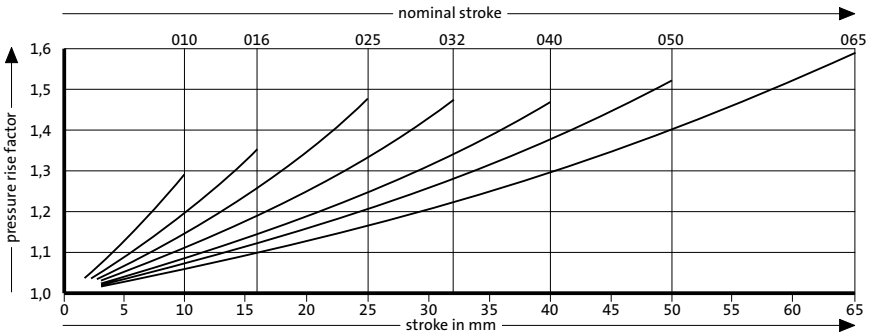

Pressure rise factor accounts for displacement but not external influences!



Gas springs low build height

Gas spring, with low build height

Normal construction Compact construction POWER LINE

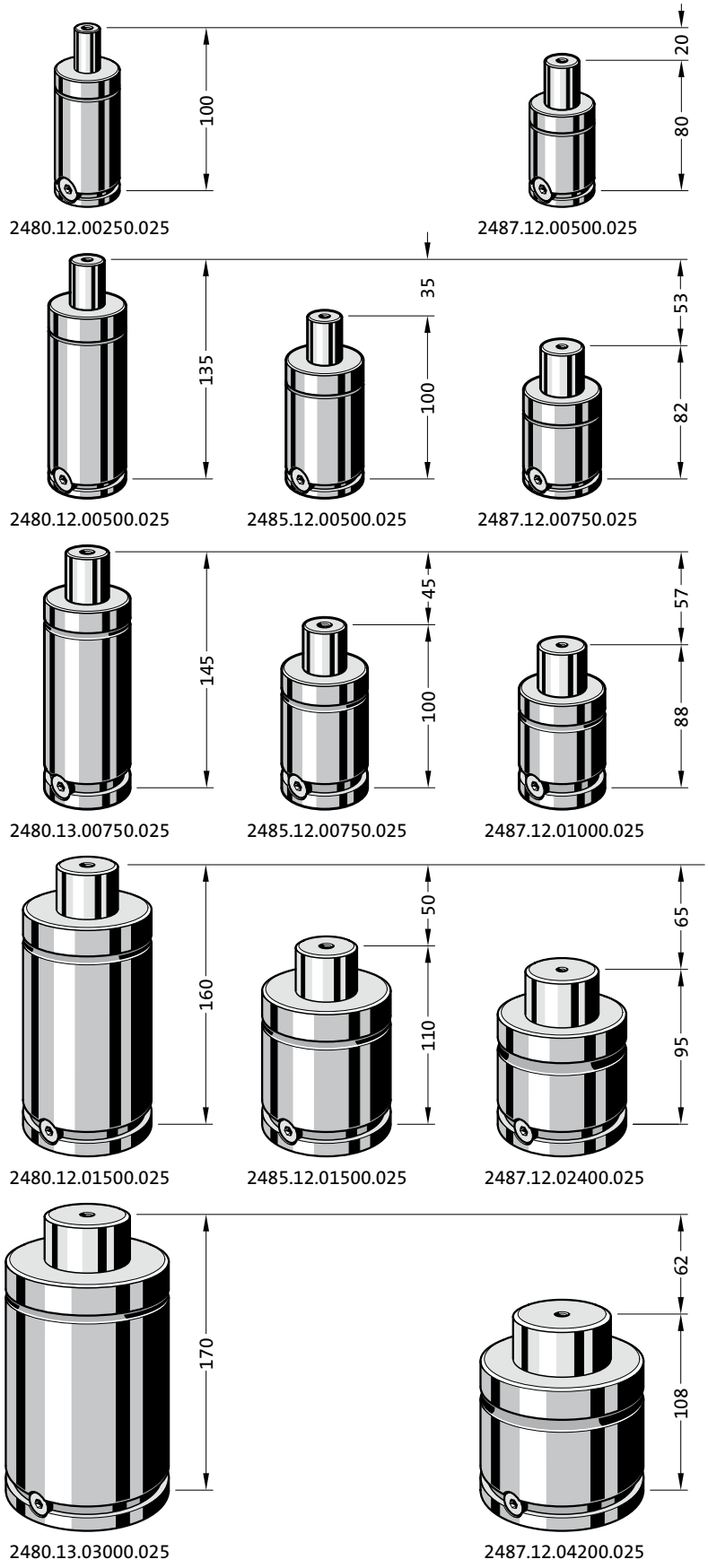

Construction heights with the same stroke and the same / increased spring force

FIBRO

Gas spring, with low build height
Mounting variations

2480.011.00500.2

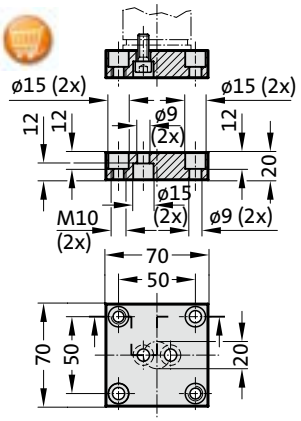

2480.011.00500

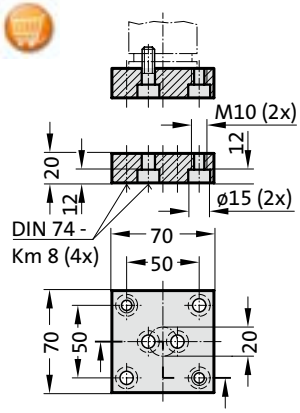

2480.011.00500.1

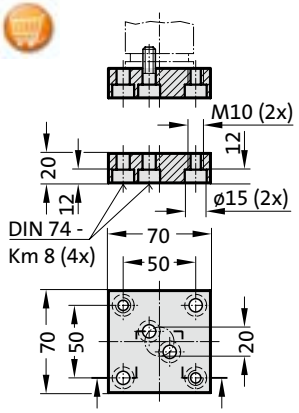

2480.022.00500

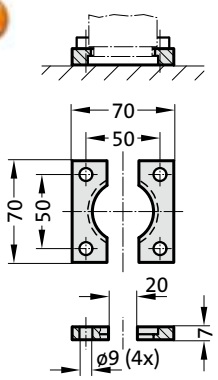

2480.055.00500

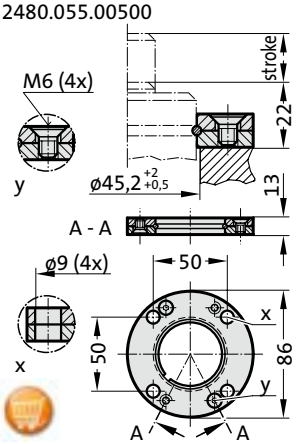

2480.057.00500

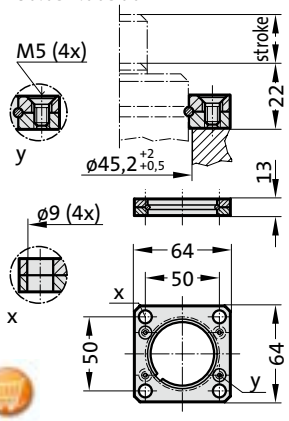

2480.007.00500

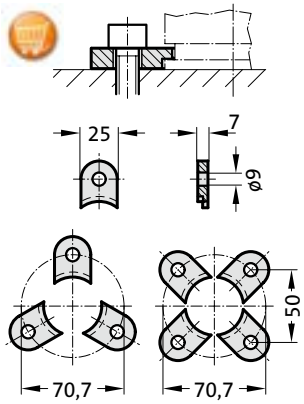

2480.008.00500 [3]

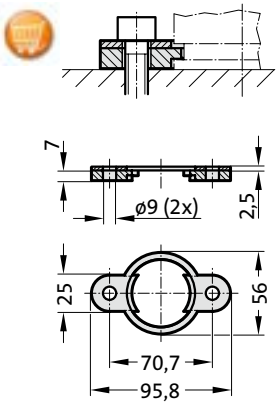

2480.044.03.00500 [2]

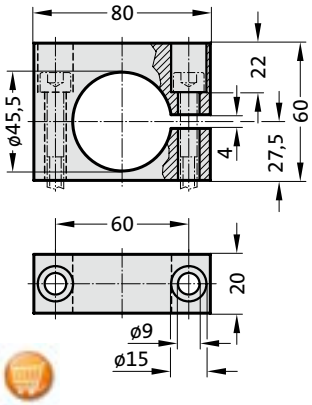

2480.044.00500 [2]

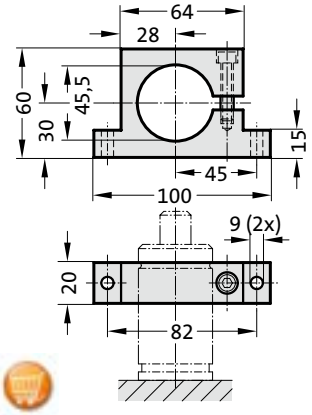

2480.010.00500.095 [3]

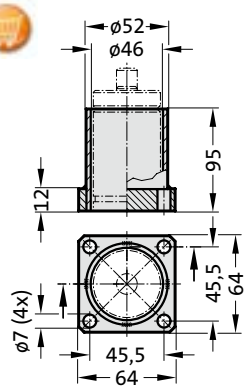

2480.064.00500 [4]

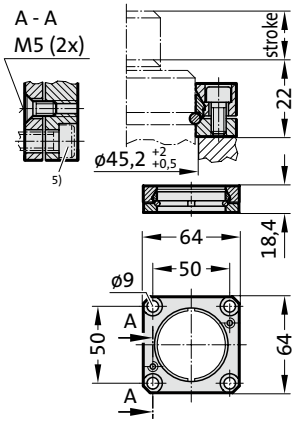

Note:

[2] Attention:
The spring force must be absorbed by the stop surface!

[3] Not for use with composite connection.

[4] Square collar flange, non-rotating, fixing for composite connection.

[5] Machine screws with hexagonal socket (compact head recommended)

Gas spring, with low build height

Note:
Initial spring force at 150 bar = 470 daN

Order No for spare parts kit: 2485.12.00500

Pressure medium: Nitrogen N_2
Max. filling pressure: 150 bar
Min. filling pressure: 50 bar
Working temperature: 0°C to +80°C
Temperature related force increase: ± 0.3%/°C
Max. recommended extensions per minute: approx. 40 to 80 (at 20°C)
Max. piston speed: 1.6 m/s

2485.12.00500.

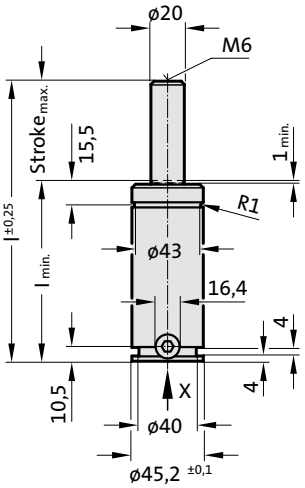

View X - Gas spring

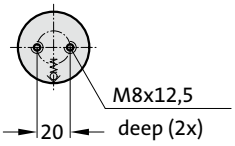



APPROVED PED 97/23/EC

V>max P>max Flex Guide™

2485.12.00500.
Gas spring, with low build height

Order No	Stroke max.	l min.	l
2485.12.00500.006	6	56	62
2485.12.00500.013	12.7	62.7	75.4
2485.12.00500.019	19	69.1	88.1
2485.12.00500.025	25	75	100
2485.12.00500.038	38.1	88.1	126.2
2485.12.00500.050	50	100	150
2485.12.00500.063	63.5	113.5	177
2485.12.00500.080	80	130	210
2485.12.00500.100	100	150	250
2485.12.00500.125	125	175	300

Initial spring force
versus charge pressure

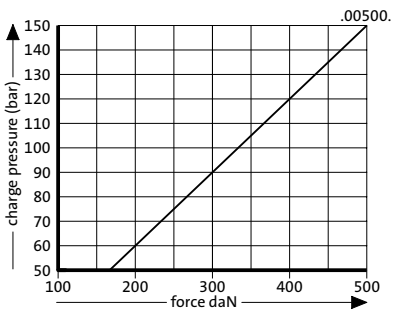

Spring force Diagram displacement versus stroke rise

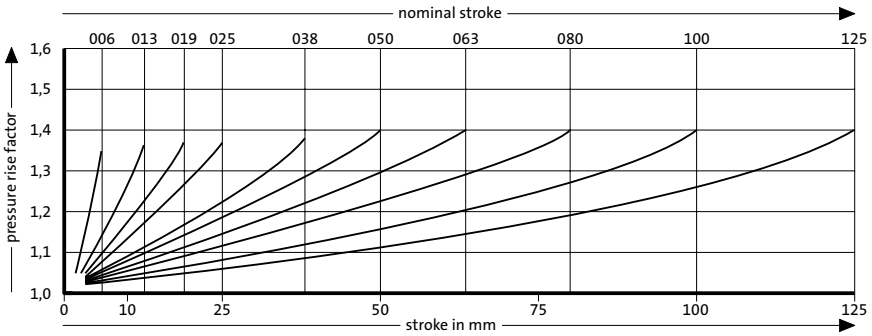

Pressure rise factor accounts for displacement but not external influences!

FIBRO

Gas spring, with low build height
Mounting variations

2480.011.00750.3

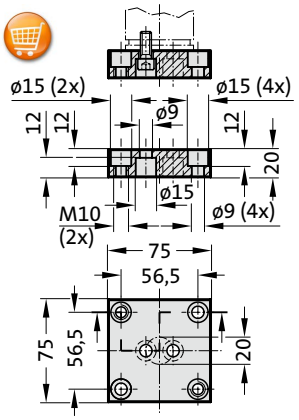

2480.011.00750

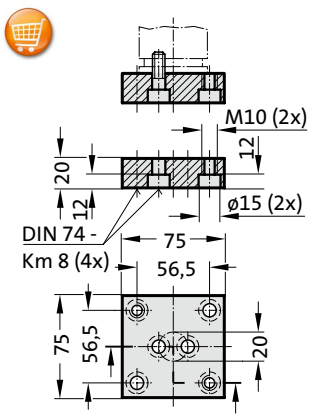

2480.011.00750.1

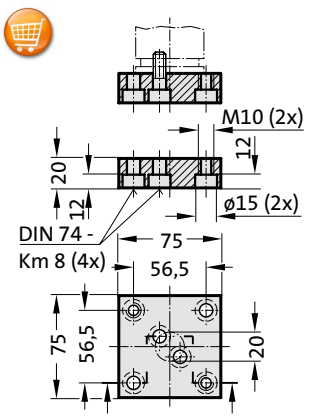

2480.022.00750

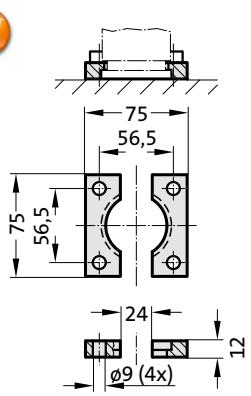

2480.055.00750

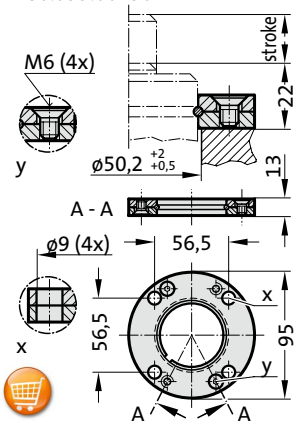

2480.057.00750

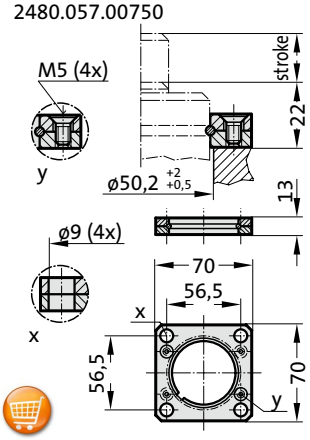

2480.007.00750

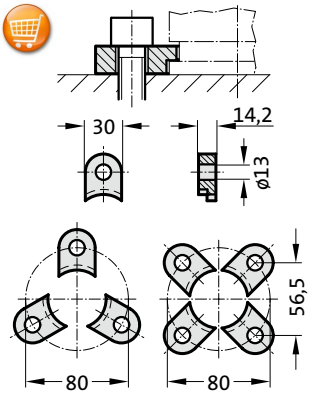

2480.008.00750 3)

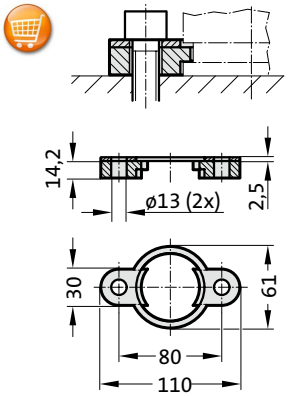

2480.064.00750 4)

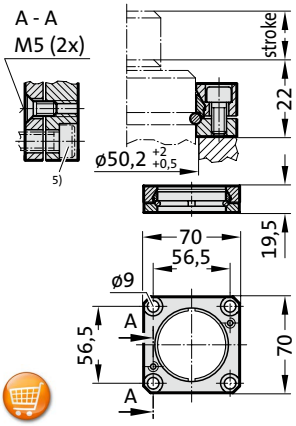

2480.044.00750 2)

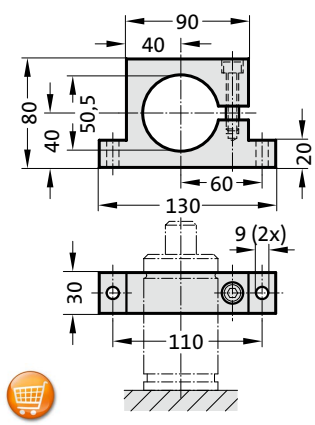

2480.010.00750.115 3)

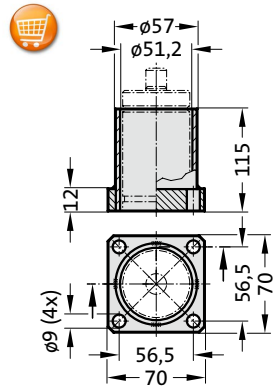

2480.045.00750 2)

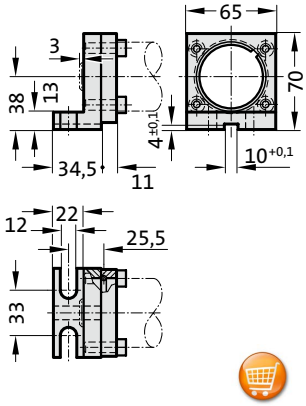

2480.047.00750 2)

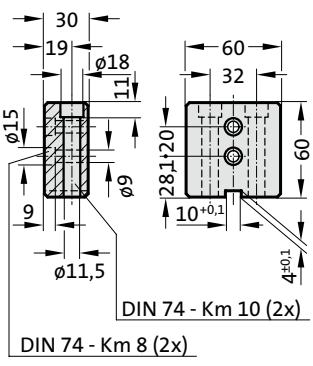

2480.044.03.00750 2)

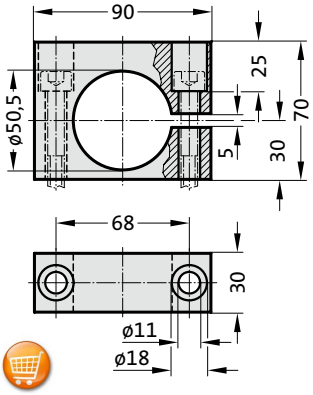

Note:

2) Attention:
The spring force must be absorbed by the stop surface!

3) Not for use with composite connection.

4) Square collar flange, non-rotating, fixing for composite connection.

5) Machine screws with hexagonal socket (compact head recommended)

subject to alterations

Gas spring, with low build height

Note:

Initial spring force at 150 bar = 750 daN

Order No for spare parts kit: 2485.12.00750

Pressure medium: Nitrogen N_2
Max. filling pressure: 150 bar
Min. filling pressure: 25 bar
Working temperature: 0°C to +80°C
Temperature related force increase: ± 0.3%/°C
Max. recommended extensions per minute: approx. 15 to 40 (at 20°C)
Max. piston speed: 1.6 m/s

2485.12.00750.

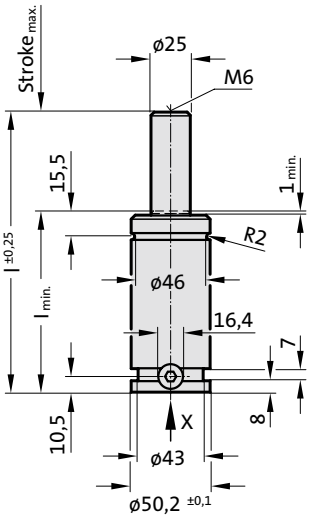

View X - Gas spring

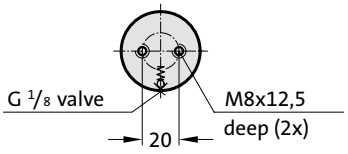



APPROVED PED 97/23/EC

V>max P>max Flex Guide™

2485.12.00750.

Gas spring, with low build height

Order No	Stroke max.	l min.	l
2485.12.00750.006	6	56	62
2485.12.00750.013	12.7	62.7	75.4
2485.12.00750.019	19	69.1	88.1
2485.12.00750.025	25	75	100
2485.12.00750.038	38.1	88.1	126.2
2485.12.00750.050	50	100	150
2485.12.00750.063	63.5	113.5	177
2485.12.00750.080	80	130	210
2485.12.00750.100	100	150	250
2485.12.00750.125	125	175	300

Initial spring force
versus charge pressure

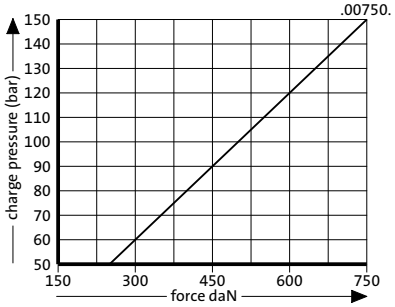

Spring force Diagram displacement versus stroke rise

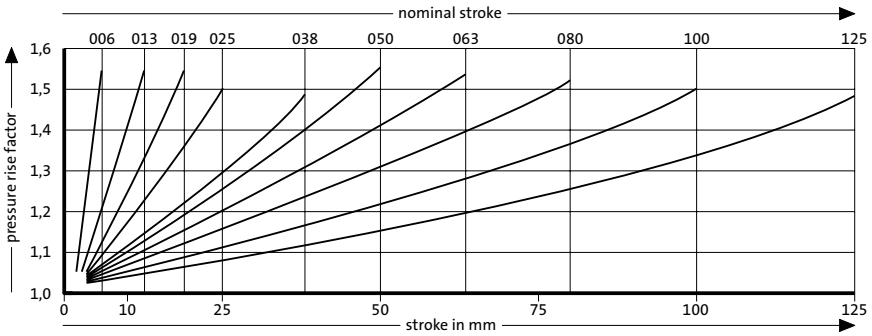

Pressure rise factor accounts for displacement but not external influences!

Gas spring, with low build height
Mounting variations

2480.011.01500

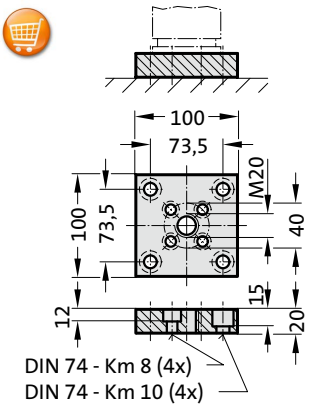

2480.011.01500.2

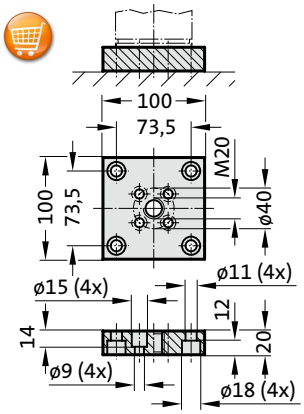

2480.022.01500

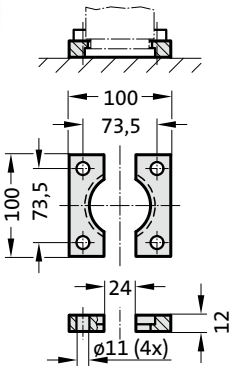

2480.058.01500

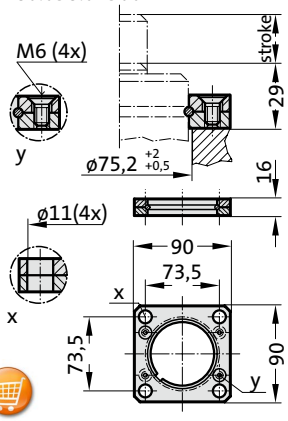

2480.007.01500

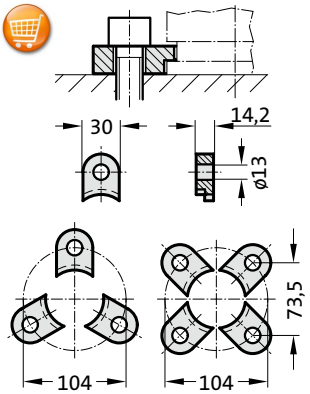

2480.044.01500 [2)]

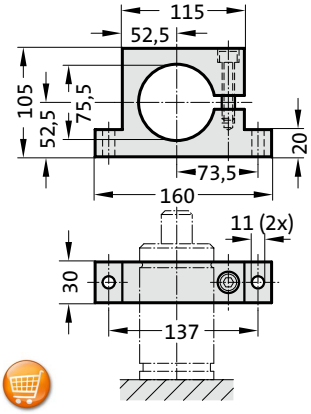

2480.044.03.01500 [2)]

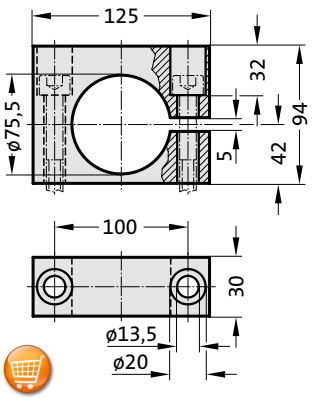

Note:

[2)] Attention:
The spring force must be absorbed by the stop surface.

subject to alterations

Gas spring, with low build height

Note:
Initial spring force at 150 bar = 1500 daN

Order No for spare parts kit: 2485.12.01500

Pressure medium: Nitrogen N_2
Max. filling pressure: 150 bar
Min. filling pressure: 25 bar
Working temperature: 0°C to +80°C
Temperature related force increase: ± 0.3%/°C
Max. recommended extensions per minute: approx. 15 to 40 (at 20°C)
Max. piston speed: 1.6 m/s

2485.12.01500.

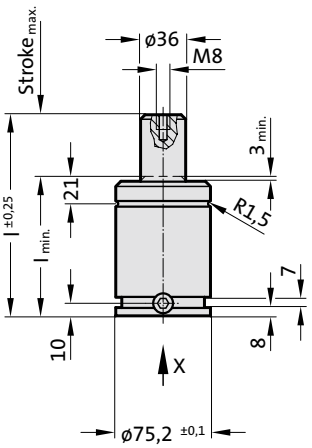

View X - Gas spring

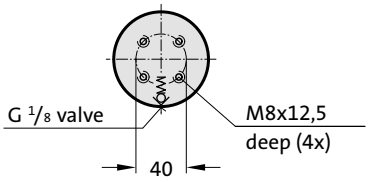



APPROVED PED 97/23/EC

S>max | V>max | P>max | Flex Guide™

2485.12.01500.

Gas spring, with low build height

Order No	Stroke max.	l min.	l
2485.12.01500.025	25	85	110
2485.12.01500.038	38.1	98.1	136.2
2485.12.01500.050	50	110	160
2485.12.01500.063	63.5	123.5	187
2485.12.01500.080	80	140	220
2485.12.01500.100	100	160	260

Initial spring force
versus charge pressure

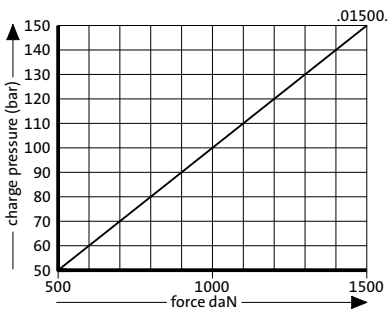

Spring force Diagram displacement versus stroke rise

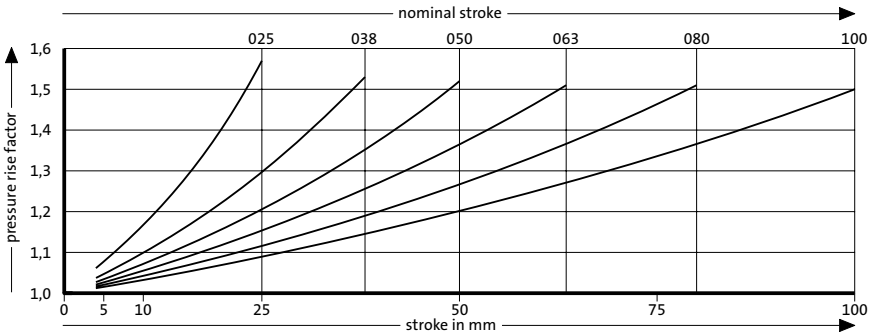

Pressure rise factor accounts for displacement but not external influences!



»Speed Control™«, Gas springs, SPC, cushioned

SPC gas spring, cushioned

Description

FIBRO SPC gas springs »Speed Control™« have been engineered to reduce or eliminate blank holder bounce; commonly associated with increased return stroke speeds form link drive presses.

SPC gas springs have inbuilt return stroke speed dampening, which decelerates the last 30 mm of piston rod stroke to 0.4 m/s, helping to bring the blank holder to a smooth stop.

Benefits of the »Speed Control™« SPC gas springs, cushioned:

- Eliminates blank holder bounce
- Increases productivity by more increasing part transfer efficiency.
- Easily retrofitted to existing dies
- Stroke lengths 125 to 300 mm.
- Linkable using hose system.

SPC gas spring, cushioned

Performance

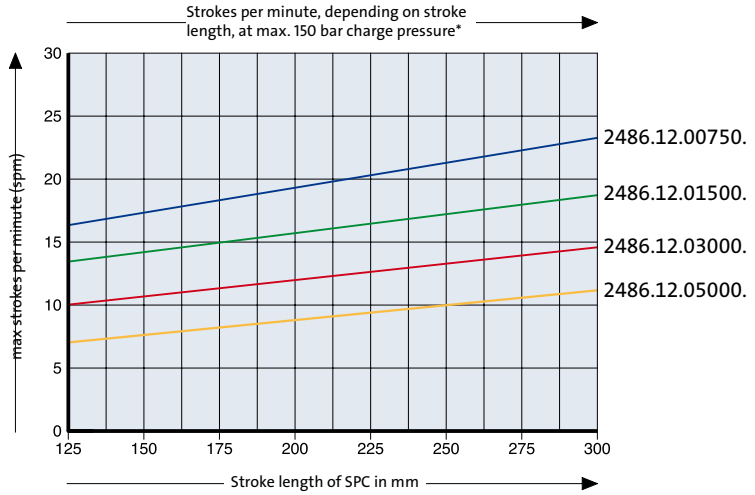

The diagram shows the max. possible number of strokes per minutes [min-1] of SPC gas springs with a max. filling pressure (150 bar) and max. used stroke lengths before there is a risk of excessive heating.

Note !

The number of strokes per minutes can be doubled by halving the initial filling pressure.

Caution !

SPC gas springs are subject to a higher heating than standard gas springs.

For this reason, please ensure adequate ventilation of the SPC gas springs in the tool.

*At ambient room temperature with free air flow

Function example

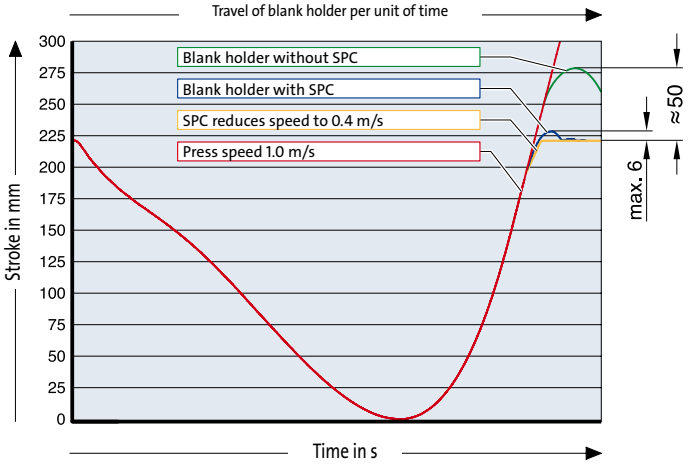

››Speed Control™‹‹SPC gas springs gave a 90% reduction of blank holder bounce.

Installation

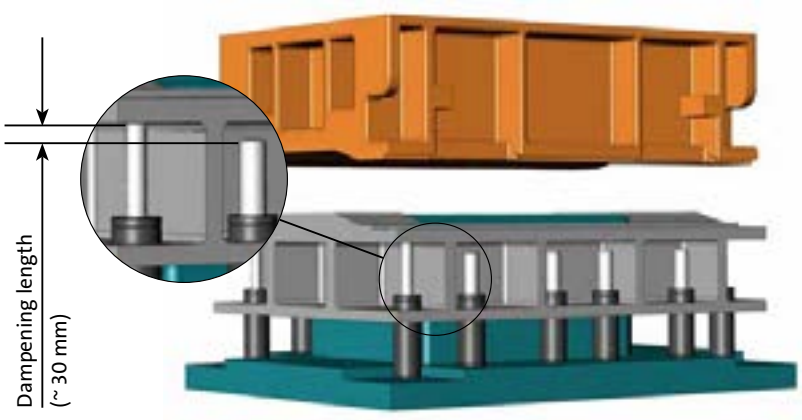

It is important that approx. 25 to 30 mm before the sheet metal retainer has reached its home position, only SPC gas springs are applied. Therefore, for the retrofitting of existing tools with SPC gas springs we recommend the following two options:

Option 1 – replace all gas springs with SPC gas springs

Option 2 – corner solution (see below)

Please note: Springs must be installed with a recess of 25 mm to balance the total length difference
(2 x stroke length = 50 mm). Alternatively, the contact surface of the sheet metal retainer can be recessed in order to achieve the same effect.

FIBRO

Gas spring SPEED CONTROL, cushioned
Mounting variations

2480.011.01500

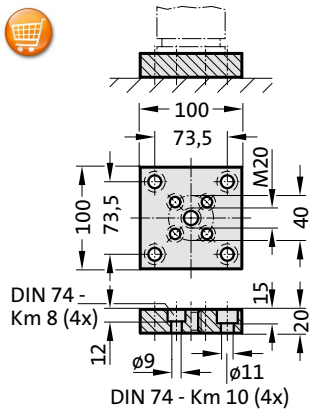

2480.011.01500.2

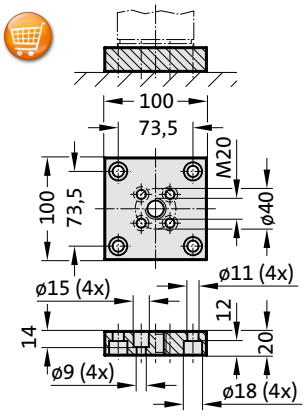

2480.022.01500

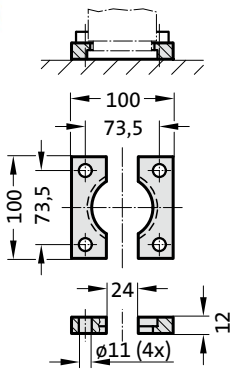

2480.055.01500

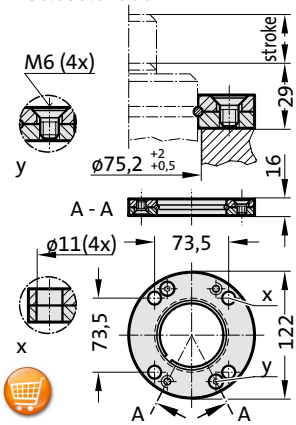

2480.057.01500

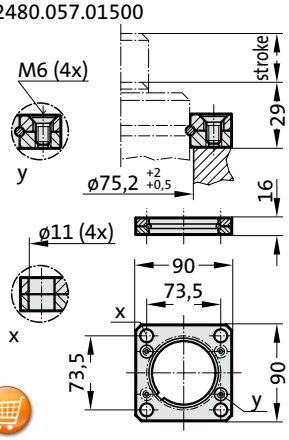

2480.007.01500

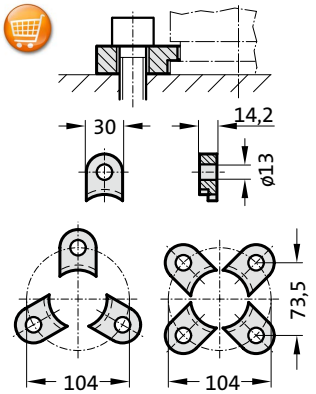

2480.008.01500 3)

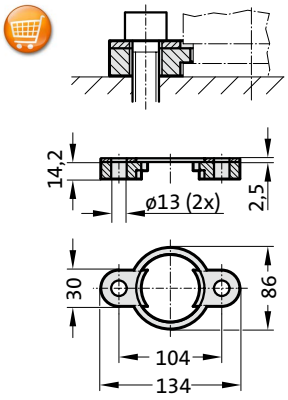

2480.064.01500 4)

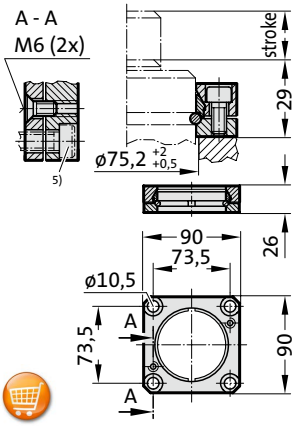

2480.044.01500 2)

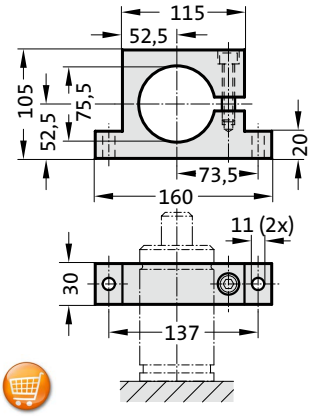

2480.045.01500 2)

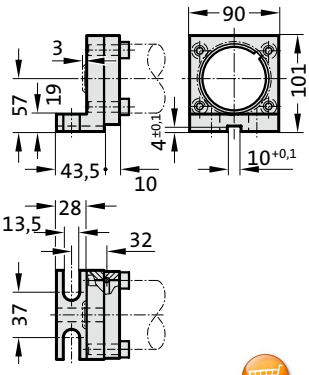

2480.047.01500 2)

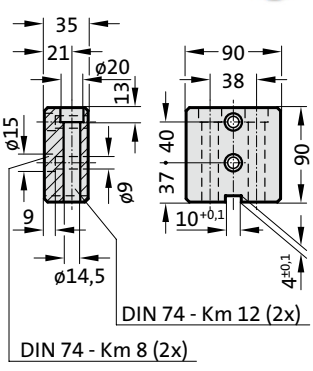

2480.044.03.01500 2)

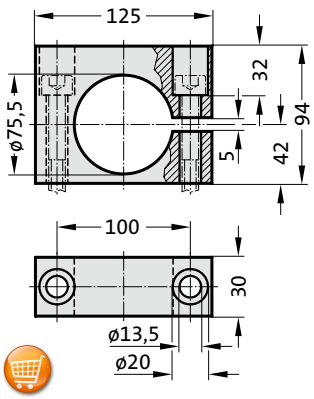

Note:

2) Attention:
The spring force must be absorbed by the stop surface.

3) Note:
Not for use with composite connection.

4) Square collar flange, non-rotating, fixing for composite connection.

5) Machine screws with hexa-gonal socket (compact head recommended).

Gas spring SPEED CONTROL, cushioned

Note:

Initial spring force at 150 bar = 750 daN

Order No for spare parts kit: 2486.12.00750

Pressure medium: Nitrogen N_2
Max. filling pressure: 150 bar
Min. filling pressure: 25 bar
Working temperature: 0°C to +80°C
Temperature related force increase: ± 0.3%/°C
Max. recommended extensions per minute: approx. 16 to 24 (at 20°C)
Dampening length: ~ 30 mm
Piston rod speed, decelerated: 0.4 m/s

2486.12.00750.

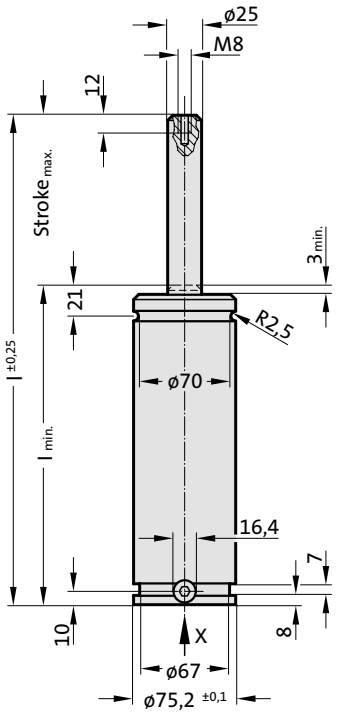

View X - Gas spring

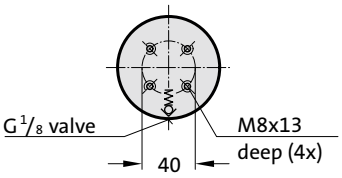



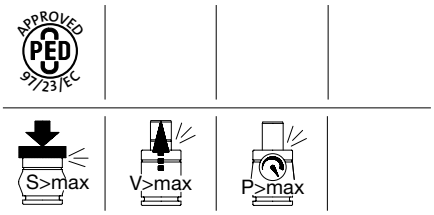

2486.12.00750.

Gas spring SPEED CONTROL, cushioned

Order No	Stroke max.	l min.	l
2486.12.00750.125	125	235	360
2486.12.00750.160	160	270	430
2486.12.00750.200	200	310	510
2486.12.00750.250	250	360	610
2486.12.00750.300	300	410	710

Initial spring force
versus charge pressure

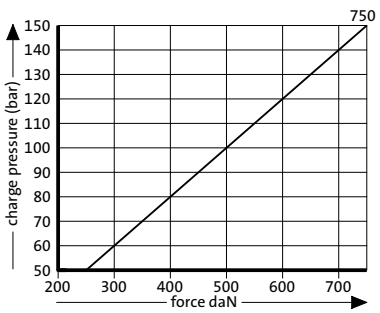

Spring force Diagram displacement versus stroke rise

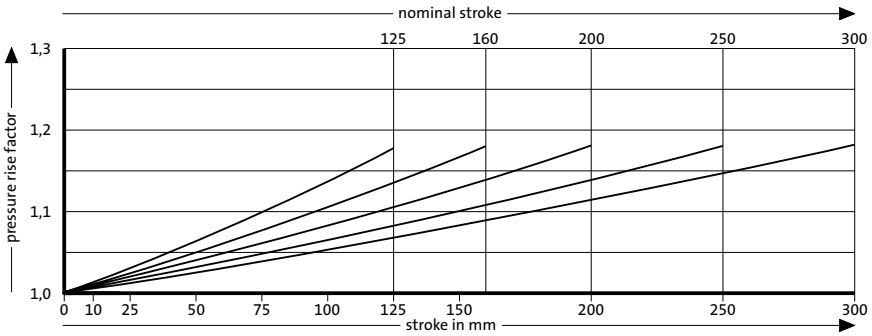

Pressure rise factor accounts for displacement but not external influences!

FIBRO

Gas spring SPEED CONTROL, cushioned
Mounting variations

2480.011.03000

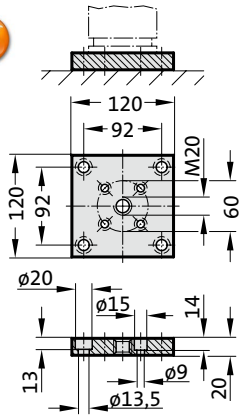

2480.011.03000.2

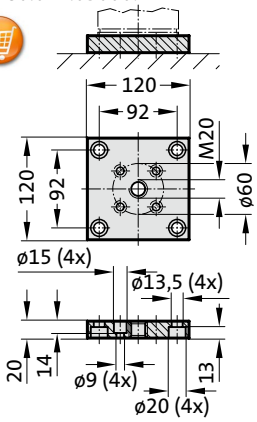

2480.022.03000

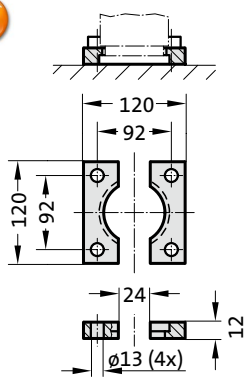

2480.055.03000

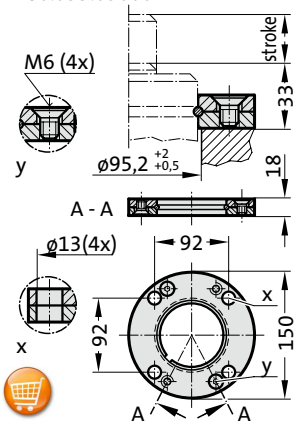

2480.057.03000

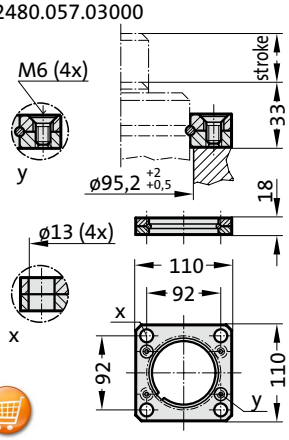

2480.007.03000

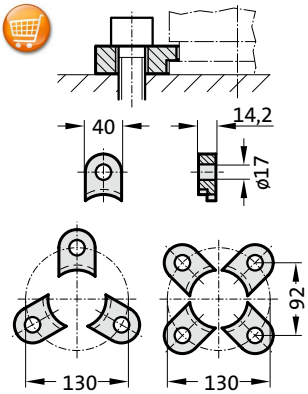

2480.008.03000 [3]

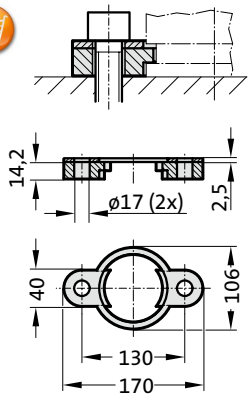

2480.064.03000 [4]

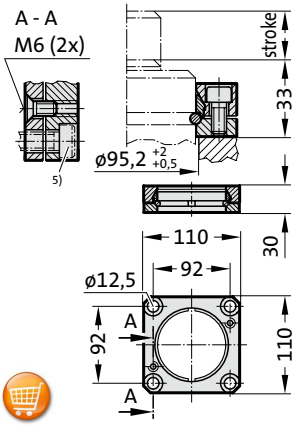

2480.044.03000 [2]

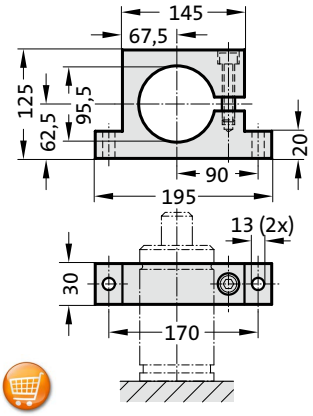

2480.045.03000 [2]

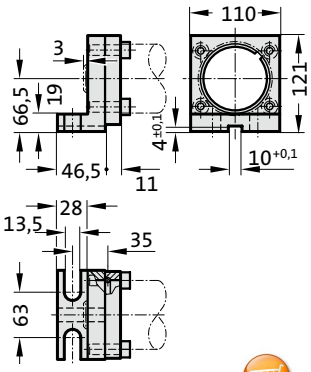

2480.047.03000 [2]

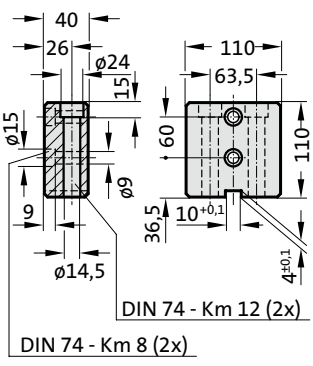

2480.044.03.03000 [2]

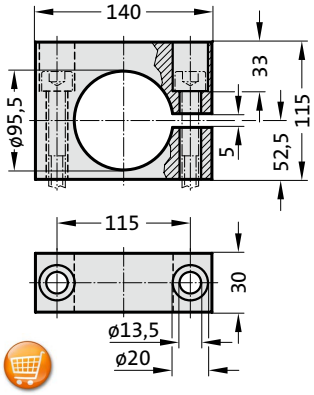

Note:

[2] Attention:
The spring force must be absorbed by the stop surface.

[3] Note:
Not for use with composite connection.

[4] Square collar flange, non-rotating, fixing for composite connection.

[5] Machine screws with hexa-gonal socket (compact head recommended).

Gas spring SPEED CONTROL, cushioned

Note:

Initial spring force at 150 bar = 1500 daN

Order No for spare parts kit: 2486.12.01500

Pressure medium: Nitrogen N_2
Max. filling pressure: 150 bar
Min. filling pressure: 25 bar
Working temperature: 0°C to +80°C
Temperature related force increase: ± 0.3%/°C
Max. recommended extensions per minute: approx. 14 to 19 (at 20°C)
Dampening length: ~ 30 mm
Piston rod speed, decelerated: 0.4 m/s

2486.12.01500.

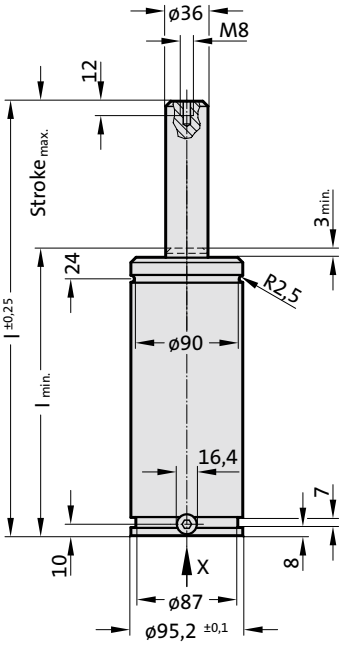

View X - Gas spring

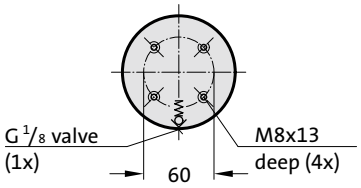



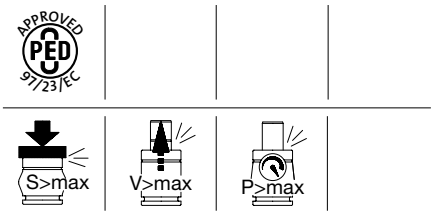

2486.12.01500.

Gas spring SPEED CONTROL, cushioned

Order No	Stroke max.	l min.	l
2486.12.01500.125	125	245	370
2486.12.01500.160	160	280	440
2486.12.01500.200	200	320	520
2486.12.01500.250	250	370	620
2486.12.01500.300	300	420	720

Initial spring force
versus charge pressure

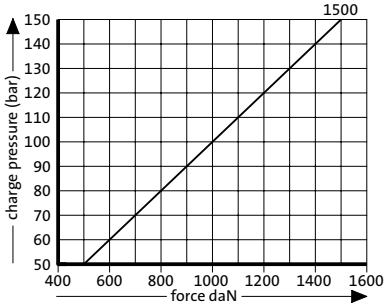

Spring force Diagram displacement versus stroke rise

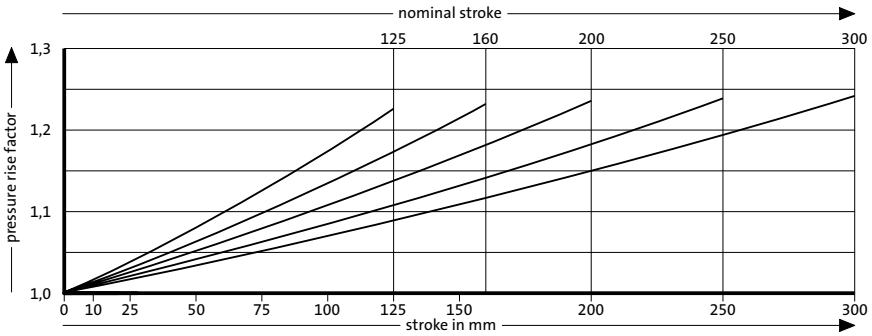

Pressure rise factor accounts for displacement but not external influences!

FIBRO

Gas spring SPEED CONTROL, cushioned
Mounting variations

2480.011.05000

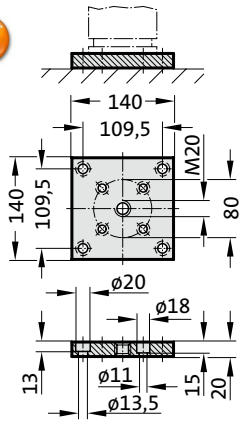

2480.011.05000.2

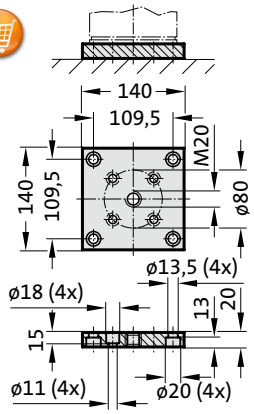

2480.022.05000

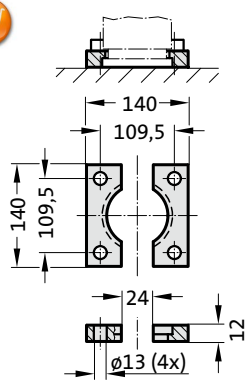

2480.055.05000

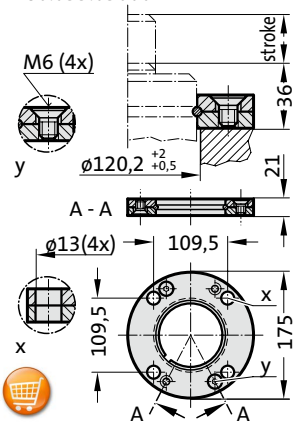

2480.057.05000

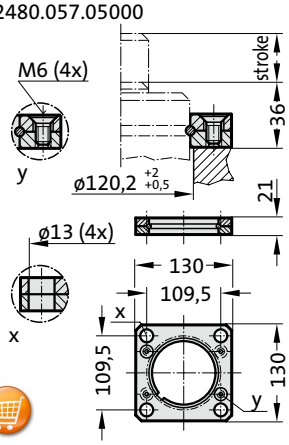

2480.007.05000

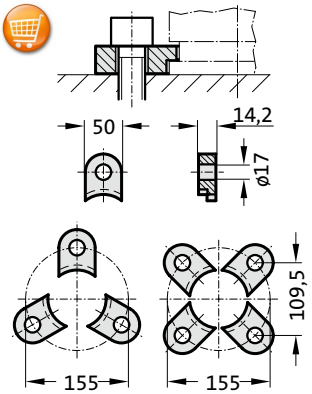

2480.008.05000 3)

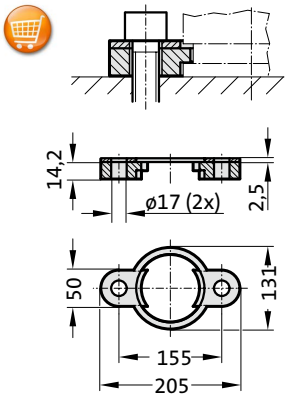

2480.064.05000 4)

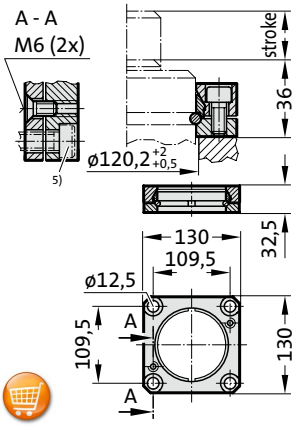

2480.044.05000 2)

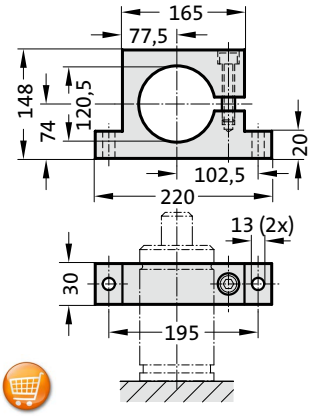

2480.045.05000 2)

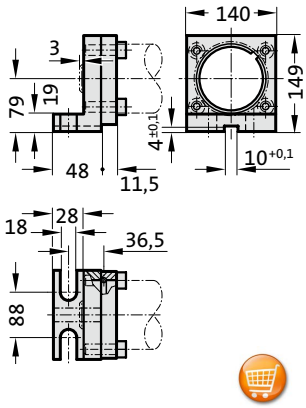

2480.047.05000 2)

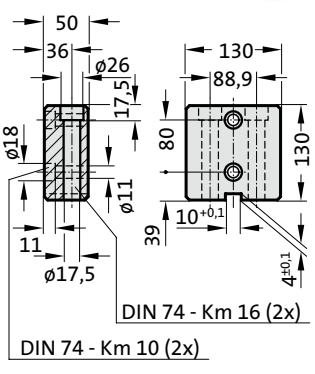

2480.044.03.05000 2)

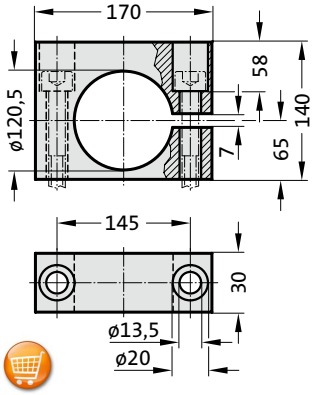

Note:

2) Attention:
The spring force must be absorbed by the stop surface.

3) Note:
Not for use with composite connection.

4) Square collar flange, non-rotating, fixing for composite connection.

5) Machine screws with hexa-gonal socket (compact head recommended).

Gas spring SPEED CONTROL, cushioned

Note:
Initial spring force at 150 bar = 3000 daN

Order No for spare parts kit: 2486.12.03000

Pressure medium: Nitrogen N_2
Max. filling pressure: 150 bar
Min. filling pressure: 25 bar
Working temperature: 0°C to +80°C
Temperature related force increase: ± 0.3%/°C
Max. recommended extensions per minute: approx. 10 to 13 (at 20°C)
Dampening length: ~ 30 mm
Piston rod speed, decelerated: 0.4 m/s

2486.12.03000.

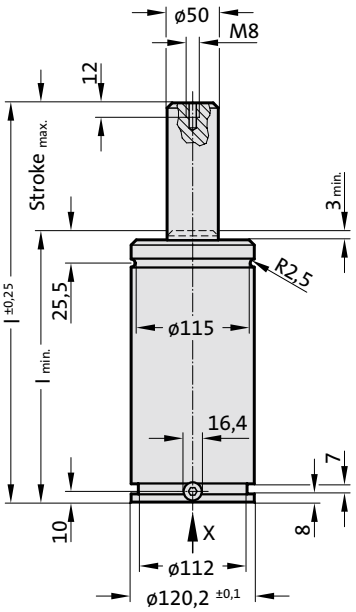

View X - Gas spring

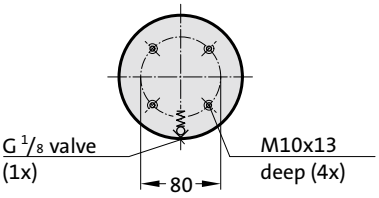



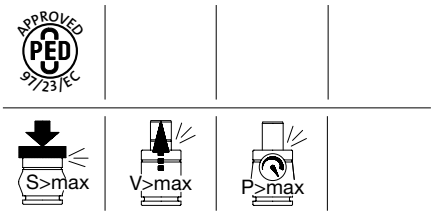

2486.12.03000.

Gas spring SPEED CONTROL, cushioned

Order No	Stroke$_{max.}$	l$_{min.}$	l
2486.12.03000.125	125	265	390
2486.12.03000.160	160	300	460
2486.12.03000.200	200	340	540
2486.12.03000.250	250	390	640
2486.12.03000.300	300	440	740

Initial spring force
versus charge pressure

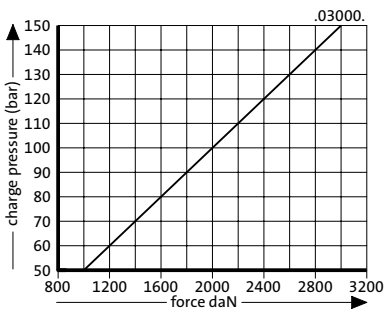

Spring force Diagram displacement versus stroke rise

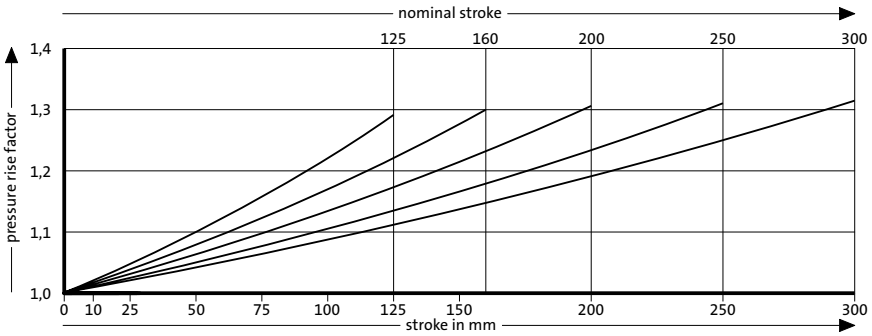

Pressure rise factor accounts for displacement but not external influences!

Gas spring SPEED CONTROL, cushioned
Mounting variations

2480.011.07500

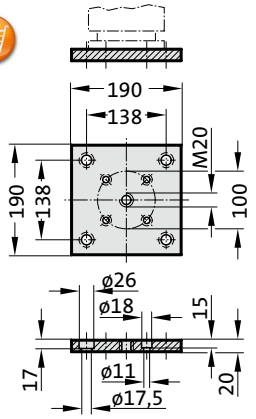

2480.011.07500.2

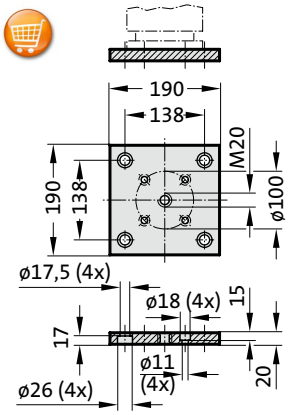

2480.022.07500

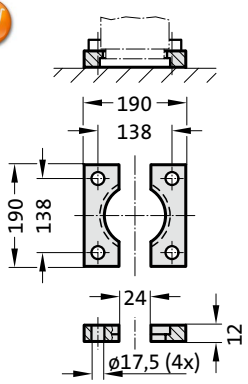

2480.055.07500

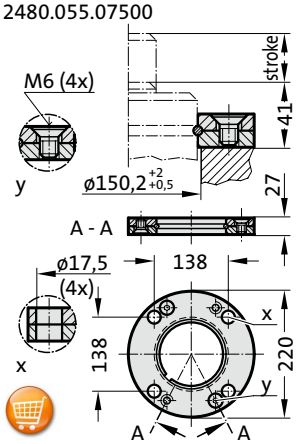

2480.057.07500

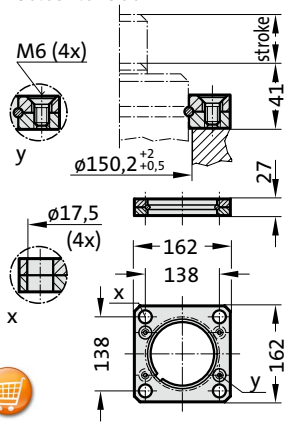

2480.007.07500

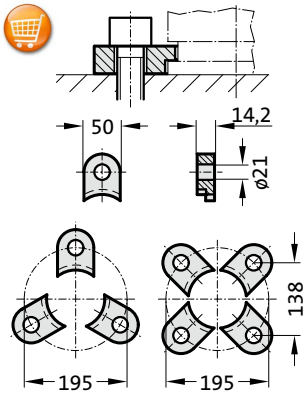

2480.008.07500 [3]

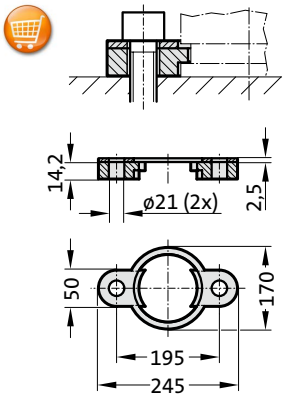

2480.064.07500 [4]

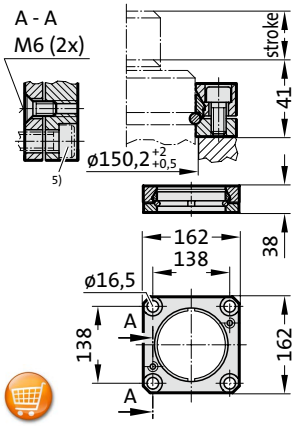

2480.044.07500 [2]

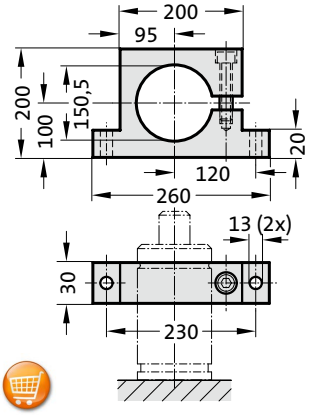

2480.044.03.07500 [2]

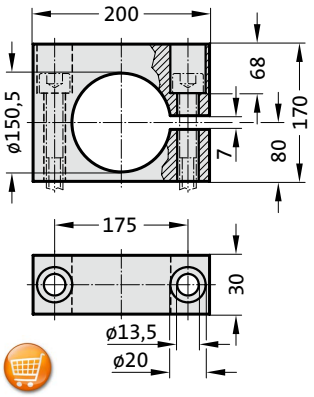

Note:

[2] Attention:
The spring force must be absorbed by the stop surface.

[3] Note:
Not for use with composite connection.

[4] Square collar flange, non-rotating, fixing for composite connection.

[5] Machine screws with hexa-gonal socket (compact head recommended).

Gas spring SPEED CONTROL, cushioned

Note:
Initial spring force at 150 bar = 5000 daN

Order No for spare parts kit: 2486.12.05000

Pressure medium: Nitrogen N_2
Max. filling pressure: 150 bar
Min. filling pressure: 25 bar
Working temperature: 0°C to +80°C
Temperature related force increase: ± 0.3%/°C
Max. recommended extensions per minute: approx. 6 to 11 (at 20°C)
Dampening length: ~ 30 mm
Piston rod speed, decelerated: 0.4 m/s

2486.12.05000.

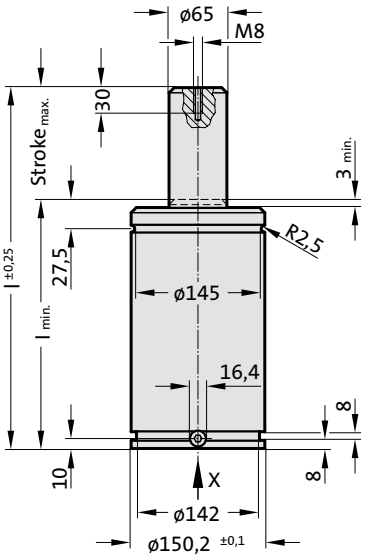

View X - Gas spring

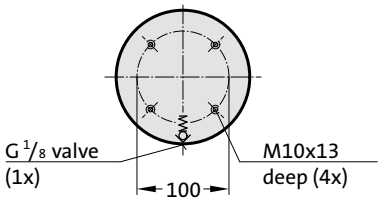



APPROVED PED 97/23/EC

S>max V>max P>max

2486.12.05000.

Gas spring SPEED CONTROL, cushioned

Order No	Stroke max.	l min.	l
2486.12.05000.125	125	280	405
2486.12.05000.160	160	315	475
2486.12.05000.200	200	355	555
2486.12.05000.250	250	405	655
2486.12.05000.300	300	455	755

Initial spring force
versus charge pressure

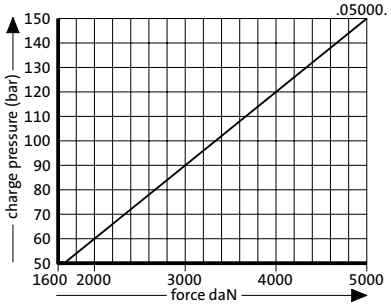

Spring force Diagram displacement versus stroke rise

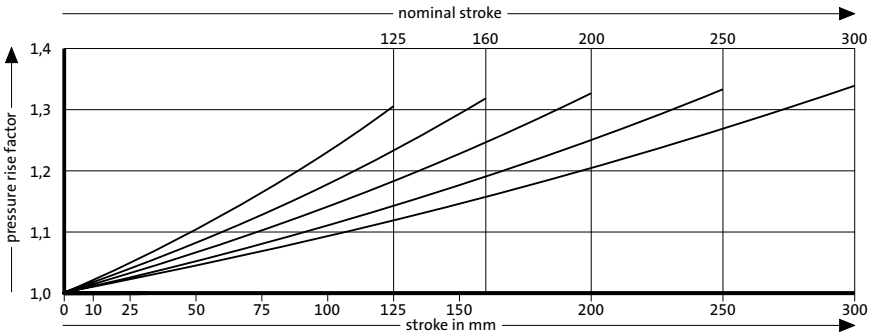

Pressure rise factor accounts for displacement but not external influences!



Gas spring, DS for Die Separation

Gas spring, DS
for Die Separation

Description:

In line of reducing the set-up time while installing the tool in the press there are used autonomous acted gas springs for tool spacing.

While using conventional gas springs they are activated with every press stroke about the whole stroke length.

The new FIBRO gas spring, DS (Die Separation) have been developed especially for tool spacing.

Because of the slow return stroke speed, the gas spring DS does not need the total stroke length.

The FIBRO gas spring, DS minimises unwanted friction in the tool, press and in the gas spring itself.

A further benefit is that they use up to 80% less energy than "conventional" standard gas springs.

Properties:

- Initial spring forces of 3000 daN to 7500 daN
- Stroke lengths of 125 mm to 300 mm
- Standardised dimensions in accordance with ISO, VDI, CNOMO
- Very slow return stroke speed compared to standard gas springs: 0,2 m/min.
- Standard safety features (FIBRO Safer Choice)
  - Safety piston rod
  - Overpressure protection
- High flexibility during fixing from the top mounting notch and lower fixing groove, together with the tapped bores in the spring base

Application example:

When using „conventional“ standard gas springs (such as 2480.13.05000.250) for creating spacing between the top and bottom parts of the tool, additional initial forces of 20 t are exercised when each stroke is performed. This force may rise to up to 30 t at the end of the stroke (see diagram 1). When you use the „new“ gas springs, DS (for example, 2486.22.05000.250), the force in every stroke is reduced to less than 10% in the same application (diagram 2).

The return stroke speed in the gas springs, DS is very slow. The complete return stroke takes 1-2 minutes.

However, this slow speed does not have any negative impact on the end position (gas springs fully extended) of the return stroke at the end of production. The piston rod is actuated oscillating up to 10% of the entire stroke, depending on the production rate.

Diagram 1

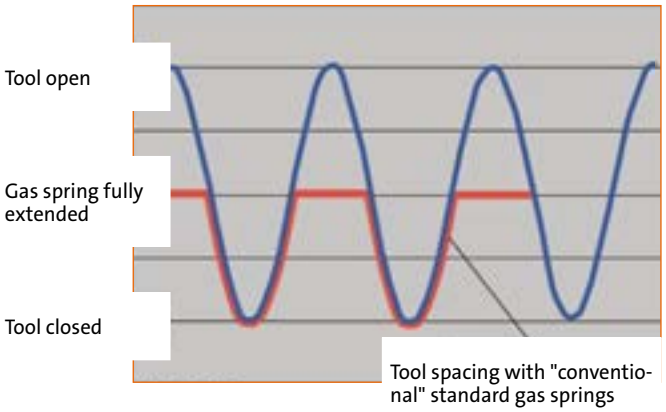

Tool spacing with "conventional" standard gas springs

Diagram 2

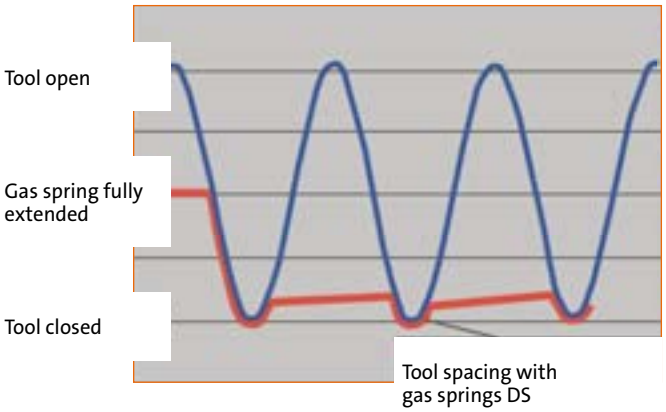

Tool spacing with gas springs DS



Gas spring DS
Mounting variations

2480.011.03000

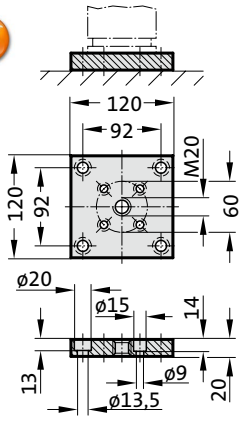

2480.011.03000.2

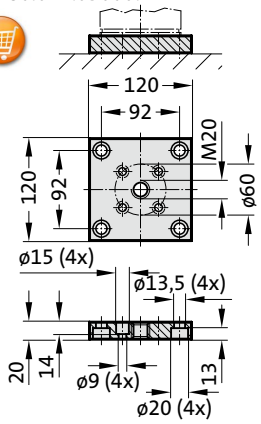

2480.022.03000

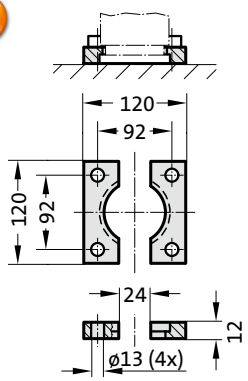

2480.055.03000

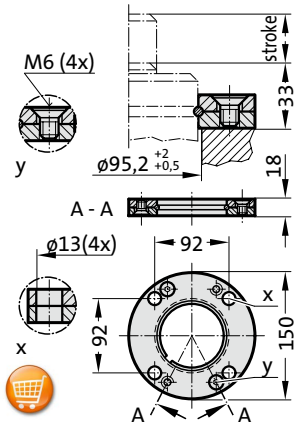

2480.057.03000

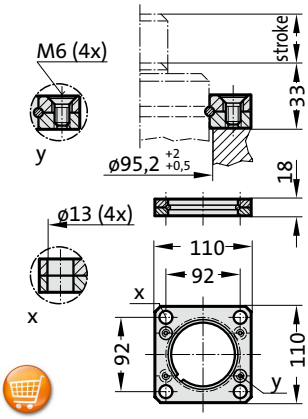

2480.007.03000

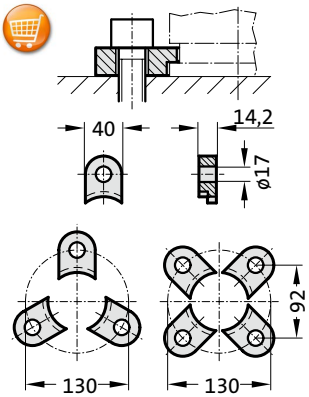

2480.008.03000 [3]

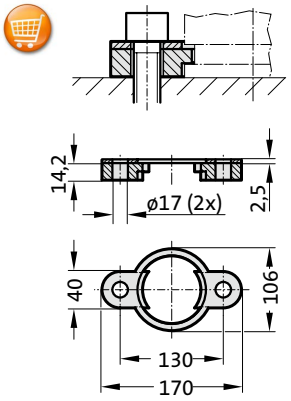

2480.064.03000 [4]

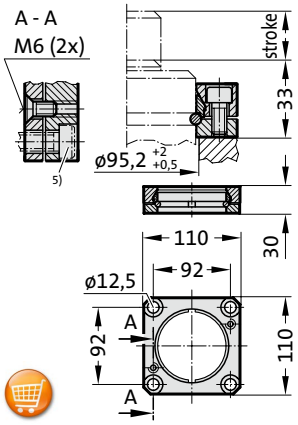

Note:

[3] Note:
Not for use with composite connection.

[4] Square collar flange, non-rotating, fixing for composite connection.

[5] Machine screws with hexa-gonal socket (compact head recommended).

Gas spring DS

Note:
Initial spring force at 150 bar = 3000 daN

Pressure medium: Nitrogen - N_2
Max. filling pressure: 150 bar
Min. filling pressure: 25 bar
Working temperature: 0°C bis +80°C
Temperature related force increase: ± 0.3%/°C
Max. recommended extensions per minute:
approx. 20 to 50 (at 20°C)
Max. piston speed: 1.6 m/s
Max. return stroke speed: 0.2 m/min

2486.22.03000.

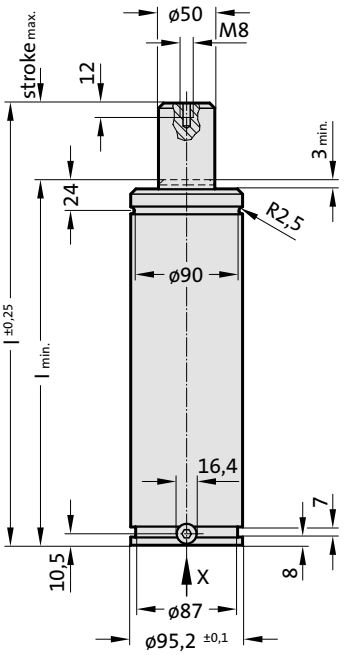

View X - Gas spring

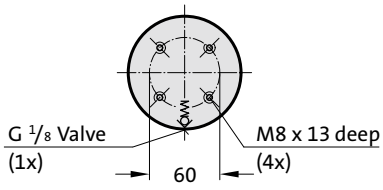



APPROVED PED 97/23/EC

V>max P>max Flex Guide™

2486.22.03000.
Gas spring DS

Order No	Stroke max.	l min.	l
2486.22.03000.080	80	200	280
2486.22.03000.100	100	220	320
2486.22.03000.125	125	245	370
2486.22.03000.160	160	280	440
2486.22.03000.200	200	320	520
2486.22.03000.250	250	370	620
2486.22.03000.300	300	420	720

Initial spring force
versus charge pressure

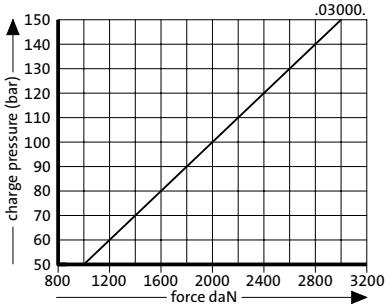

Spring force Diagram displacement versus stroke rise

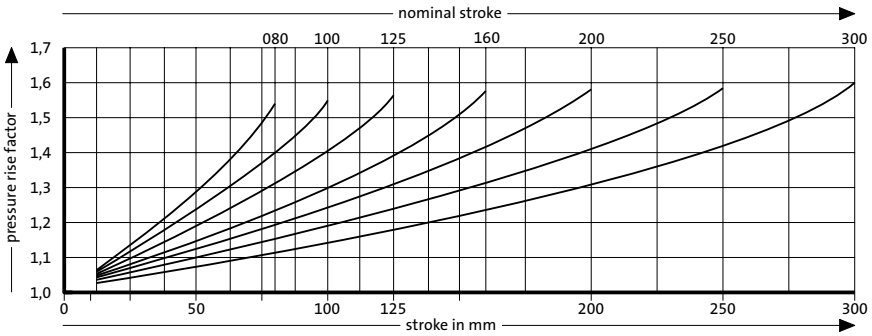

Pressure rise factor accounts for displacement but not external influences!

Gas spring DS
Mounting variations

2480.011.05000

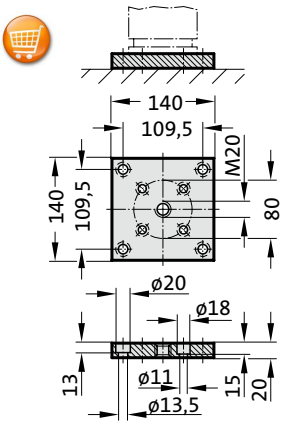

2480.011.05000.2

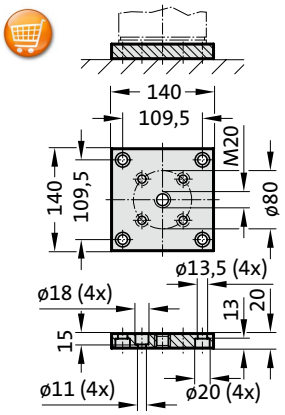

2480.022.05000

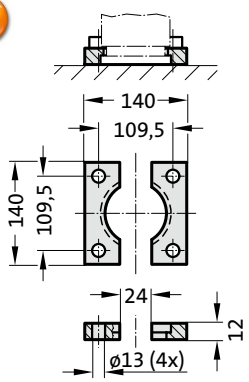

2480.055.05000

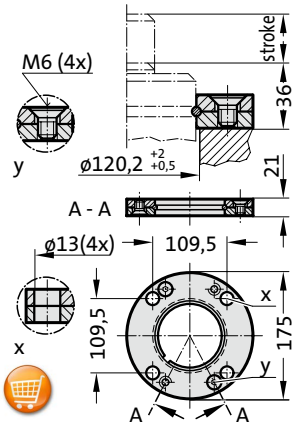

2480.057.05000

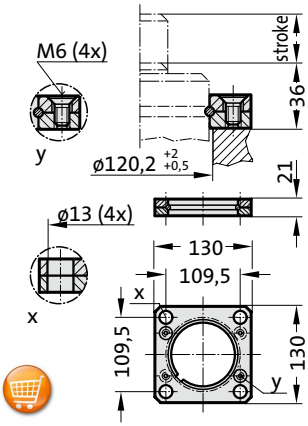

2480.007.05000

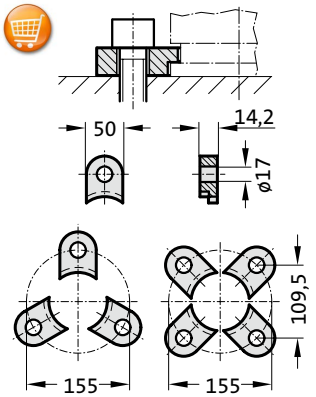

2480.008.05000 [3]

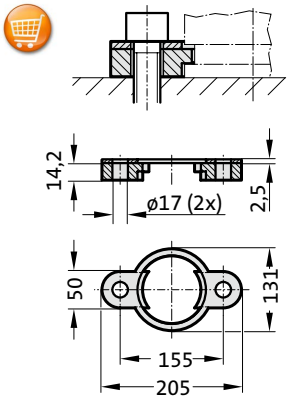

2480.064.05000 [4]

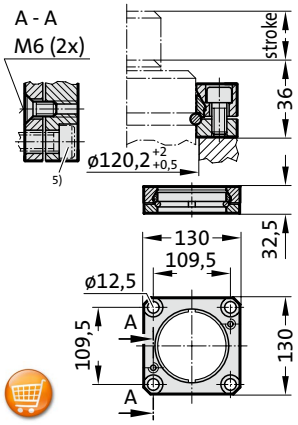

Note:

[3] Note:
Not for use with composite connection.

[4] Square collar flange, non-rotating, fixing for composite connection.

[5] Machine screws with hexa-gonal socket (compact head recommended).

Gas spring DS

Note:
Initial spring force at 150 bar = 5000 daN

Pressure medium: Nitrogen - N_2
Max. filling pressure: 150 bar
Min. filling pressure: 25 bar
Working temperature: 0°C bis +80°C
Temperature related force increase: ± 0.3%/°C
Max. recommended extensions per minute:
approx. 20 to 50 (at 20°C)
Max. piston speed: 1.6 m/s
Max. return stroke speed: 0.2 m/min

2486.22.05000.

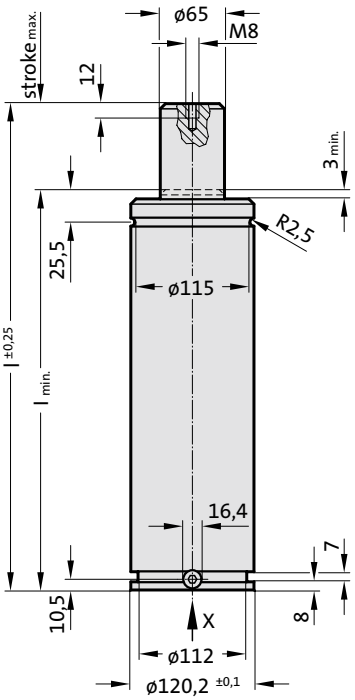

View X - Gas spring

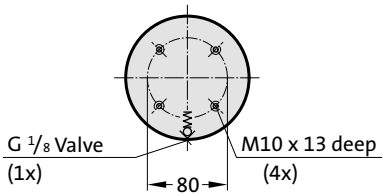



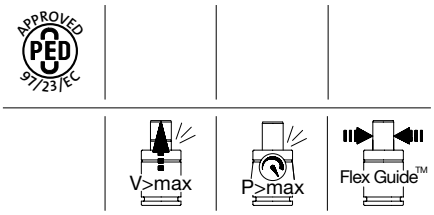

2486.22.05000.
Gas spring DS

Order No	Stroke max.	l min.	l
2486.22.05000.080	80	220	300
2486.22.05000.100	100	240	340
2486.22.05000.125	125	265	390
2486.22.05000.160	160	300	460
2486.22.05000.200	200	340	540
2486.22.05000.250	250	390	640
2486.22.05000.300	300	440	740

Initial spring force
versus charge pressure

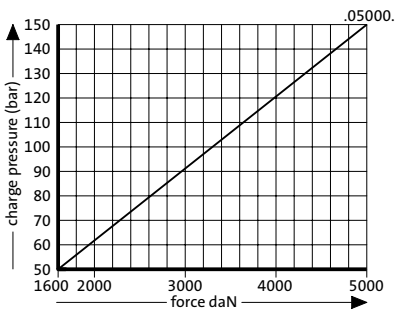

Spring force Diagram displacement versus stroke rise

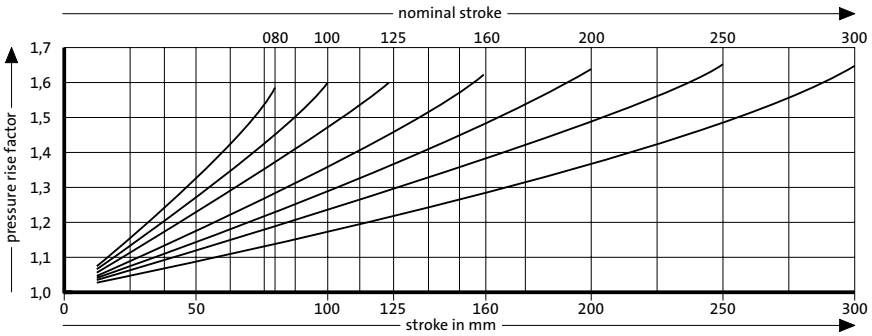

Pressure rise factor accounts for displacement but not external influences!

FIBRO

Gas spring DS
Mounting variations

2480.011.07500

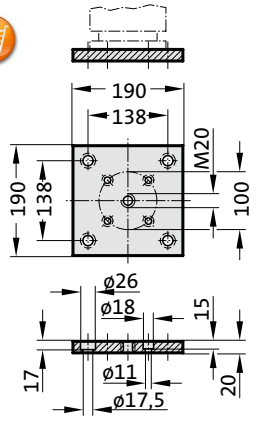

2480.011.07500.2

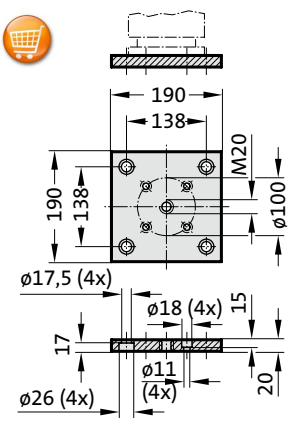

2480.022.07500

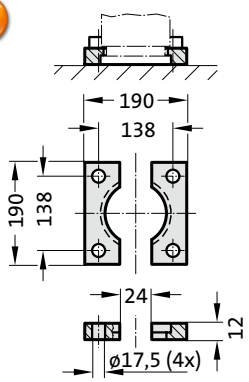

2480.055.07500

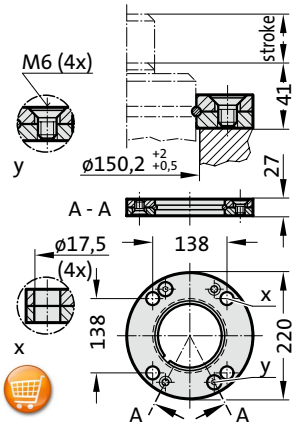

2480.057.07500

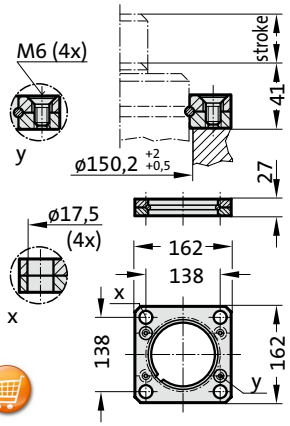

2480.007.07500

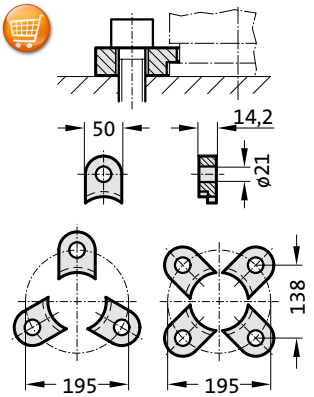

2480.008.07500 [3]

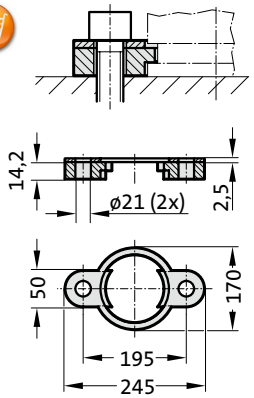

2480.064.07500 [4]

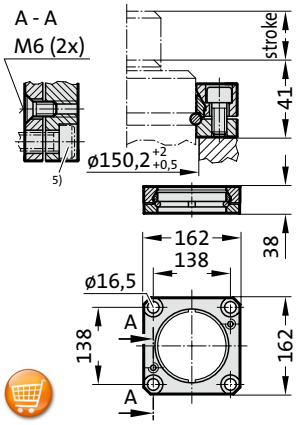

Note:

[3] Note:
Not for use with composite connection.

[4] Square collar flange, non-rotating, fixing for composite connection.

[5] Machine screws with hexa-gonal socket (compact head recommended).

Gas spring DS

Note:
Initial spring force at 150 bar = 7500 daN

Pressure medium: Nitrogen - N_2
Max. filling pressure: 150 bar
Min. filling pressure: 25 bar
Working temperature: 0°C bis +80°C
Temperature related force increase: ± 0.3%/°C
Max. recommended extensions per minute: approx. 20 to 50 (at 20°C)
Max. piston speed: 1.6 m/s
Max. return stroke speed: 0.2 m/min

2486.22.07500.

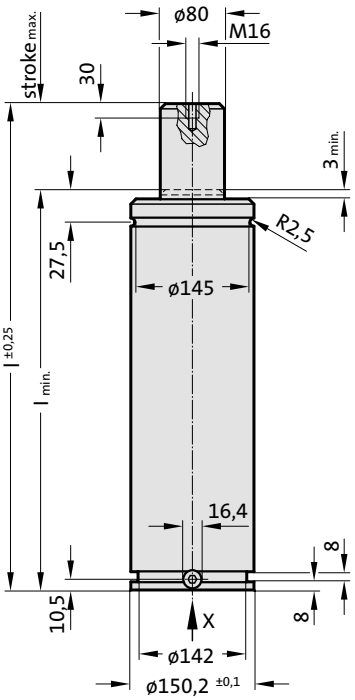

View X - Gas spring

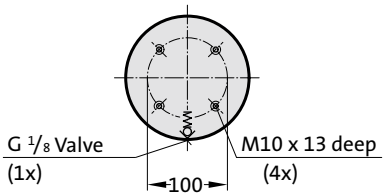



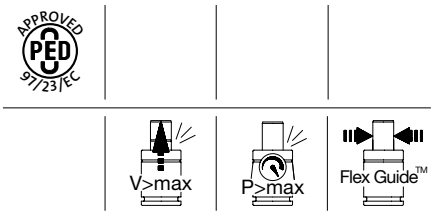

2486.22.07500.
Gas spring DS

Order No	Stroke max.	l min.	l
2486.22.07500.080	80	235	315
2486.22.07500.100	100	255	355
2486.22.07500.125	125	280	405
2486.22.07500.160	160	315	475
2486.22.07500.200	200	355	555
2486.22.07500.250	250	405	655
2486.22.07500.300	300	455	755

Initial spring force
versus charge pressure

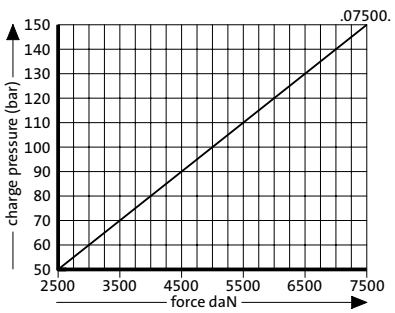

Spring force Diagram displacement versus stroke rise

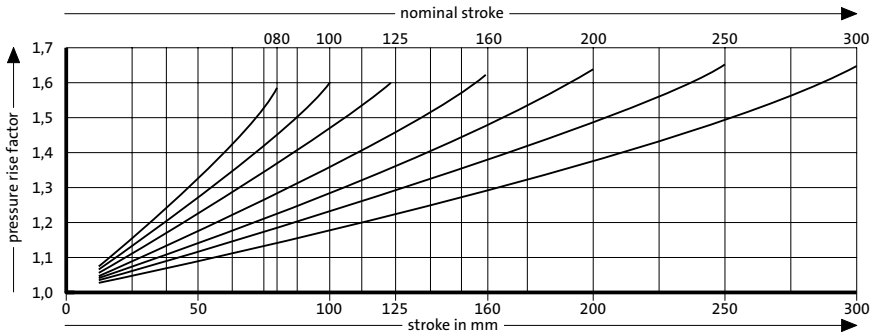

Pressure rise factor accounts for displacement but not external influences!



Gas springs with fastening to Ford Standard WDX

Please request your catalogue



Gas springs with thread

FIBRO

Gas spring with external thread
Mounting variations

2480.005.00200.

Slotted nut

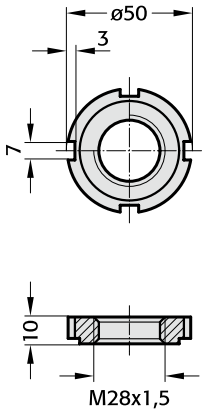

Mounting examples:

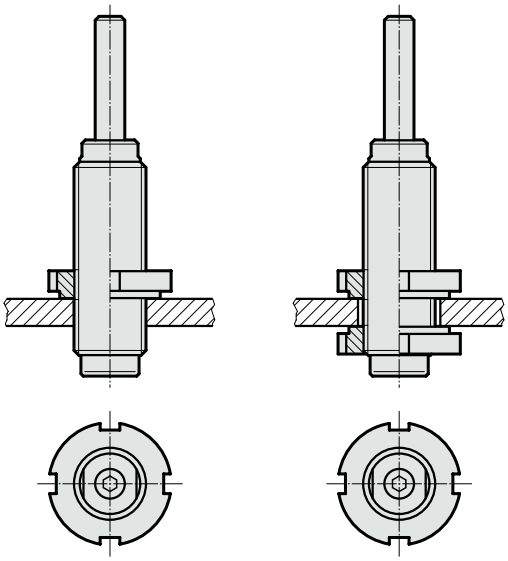

subject to alterations

Gas spring with external thread

Description:

The gas springs are colour-coded according to the spring force rating ranges 50–100–150–200 daN.

All springs, regardless of their spring force ratings, are of the same design. The differing force ratings result exclusively from the differing charge pressures.
Do take into consideration the colour-coded pressure rating during repair work and recharging.

Note:

Order No for spare parts kit: 2480.21.00150

Pressure medium: Nitrogen N_2
Max. filling pressure: 180 bar
Min. filling pressure: 25 bar
Working temperature: 0°C to +80°C
Temperature related force increase: ± 0.3%/°C
Max. recommended extensions per minute: approx. 80 to 100 (at 20°C)
Max. piston speed: 1.6 m/s

Spring forces as per spring diagram.

Upon customers request, also available unfilled, Order No 2482.32.00000...., Colour: black

2480.32.

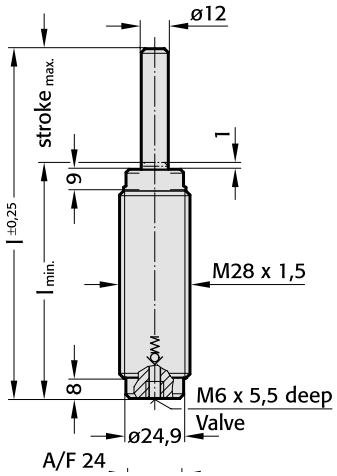



APPROVED PED 97/23/EC

S>max V>max P>max

2480.32. Gas spring with external thread

Order No*	Stroke$_{max.}$	l	l$_{min.}$
2480.32.□□□□□.010	10	62	52
2480.32.□□□□□.013	12.7	67.4	54.7
2480.32.□□□□□.016	16	74	58
2480.32.□□□□□.025	25	92	67
2480.32.□□□□□.038	38.1	118.2	80.1
2480.32.□□□□□.050	50	142	92
2480.32.□□□□□.063	63.5	169	105.5
2480.32.□□□□□.080	80	202	122
2480.32.□□□□□.100	100	242	142
2480.32.□□□□□.125	125	292	167

*complete with initial spring force

Spring force marking:
Initial spring force [daN] - Pressure [bar] - Colour:
.00050. - 45 - green
.00100. - 90 - blue
.00150. - 135 - red
.00200. - 180 - yellow

Initial spring force versus charge pressure

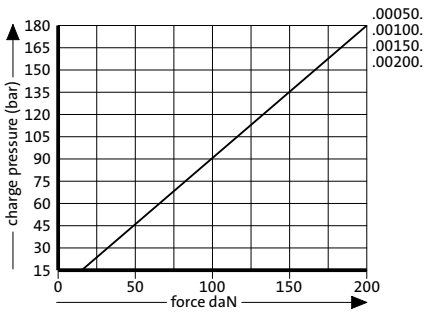

Spring force Diagram displacement versus stroke rise

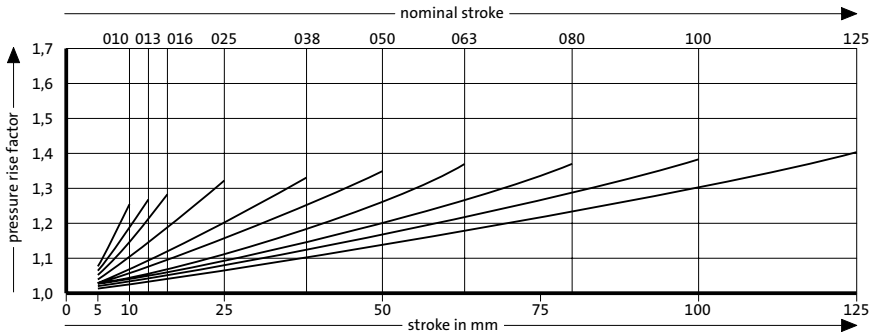

Pressure rise factor accounts for displacement but not external influences!

Gas spring with external thread
Mounting variations

2480.005.00250.

Slotted nut

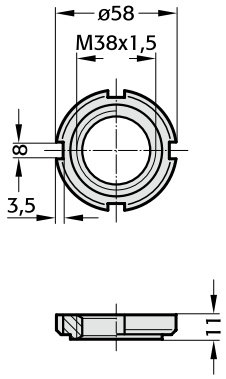

2480.006.00250.

Clamped flange

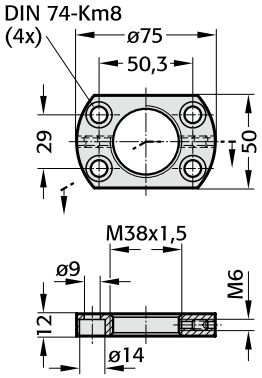

2480.00.51.01

Box spanner for assembling/disassembling of gas springs



Mounting examples:

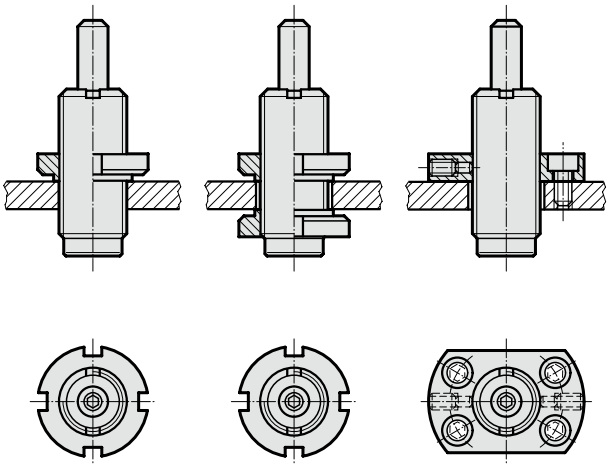

subject to alterations

Gas spring with external thread

Note:

Initial spring force at 150 bar = 250 daN

Order No for spare parts kit: 2480.12.00250

Pressure medium: Nitrogen N_2
Max. filling pressure: 150 bar
Min. filling pressure: 50 bar
Working temperature: 0°C to +80°C
Temperature related force increase: ± 0.3%/°C
Max. recommended extensions per minute: approx. 80 to 100 (at 20°C)
Max. piston speed: 1.6 m/s

Fixing:

Installation with ring nut(s) 2480.005.00250 can be done with one or two ring nuts. If the hole in the bolster plate is not threaded, two ring nuts are needed. Holes threaded M 38 × 1,5 require one only ring nut for mounting of the gas springs.
Mounting with a threaded flange plate has the advantage of a degree of adjustability as far as the flange screws permit, moreover it is often found easier to make do with a clearance hole in the tool plate. Locking is by way of two lock screws with thrust plugs, provided in the threaded flange.
Diameter of through-hole in tool plate = 38 mm – plus four tapped holes M 8.

2480.32.00250.

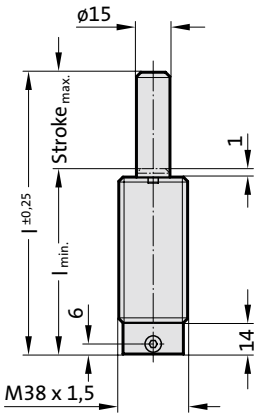

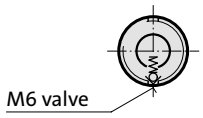



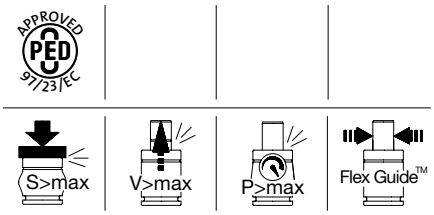

2480.32.00250.

Gas spring with external thread

Order No	Stroke$_{max.}$	l$_{min.}$	l
2480.32.00250.013	12.7	62.7	75.4
2480.32.00250.025	25	75	100
2480.32.00250.038	38.1	88.1	126.2
2480.32.00250.050	50	100	150
2480.32.00250.063	63.5	113.5	177
2480.32.00250.080	80	130	210
2480.32.00250.100	100	150	250

Initial spring force
versus charge pressure

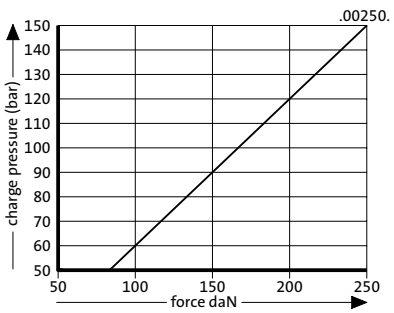

Spring force Diagram displacement versus stroke rise

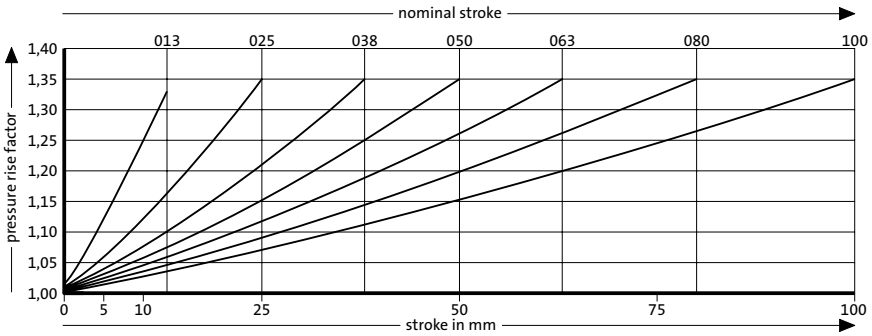

Pressure rise factor accounts for displacement but not external influences!

Gas spring with male fixing thread, small mounting height
Mounting variations

2480.00.51.01

Box spanner for assembling/disassembling of gas springs



Mounting examples:

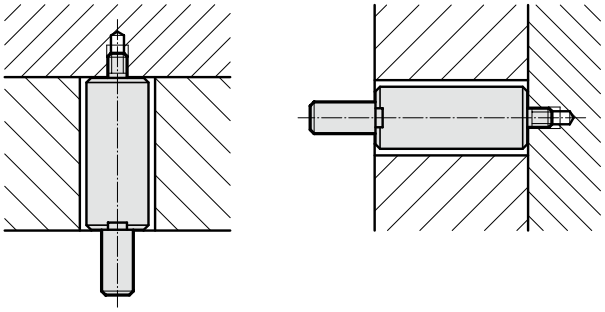

Gas spring with male fixing thread, small mounting height

Note:

Initial spring force at 150 bar = 250 daN

Order No for spare parts kit: 2480.12.00250

Pressure medium: Nitrogen N_2
Max. filling pressure: 150 bar
Min. filling pressure: 50 bar
Working temperature: 0°C to +80°C
Temperature related force increase: ± 0.3%/°C
Max. recommended extensions per minute: approx. 80 to 100 (at 20°C)
Max. piston speed: 1.6 m/s

2480.82.00250.

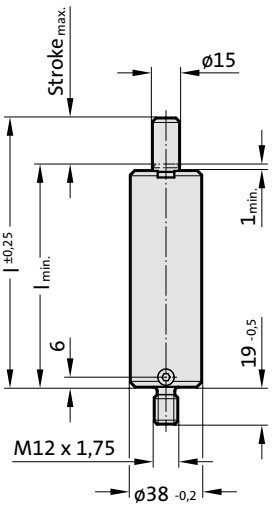

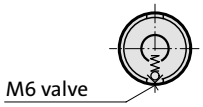



APPROVED PED 97/23/EC

S>max | V>max | P>max | Flex Guide™

2480.82.00250.

Gas spring with male fixing thread, small mounting height

Order No	Stroke max.	l min.	l
2480.82.00250.013	12.7	62.7	75.4
2480.82.00250.025	25	75	100
2480.82.00250.038	38.1	88.1	126.2
2480.82.00250.050	50	100	150
2480.82.00250.063	63.5	113.5	177
2480.82.00250.080	80	130	210
2480.82.00250.100	100	150	250

Initial spring force
versus charge pressure

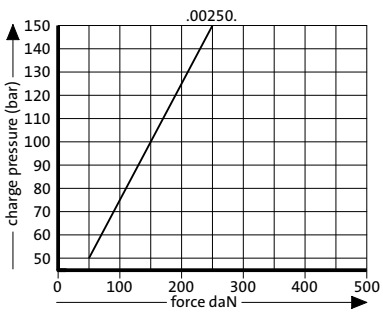

Spring force Diagram displacement versus stroke rise

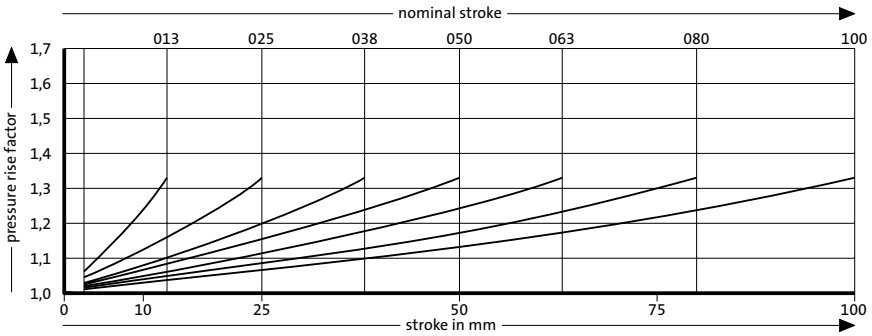

Pressure rise factor accounts for displacement but not external influences!

Gas spring with male fixing thread, POWERLINE
Mounting variations

2480.00.51.05

Box spanner for assembling/disassembling of gas springs



Mounting examples:

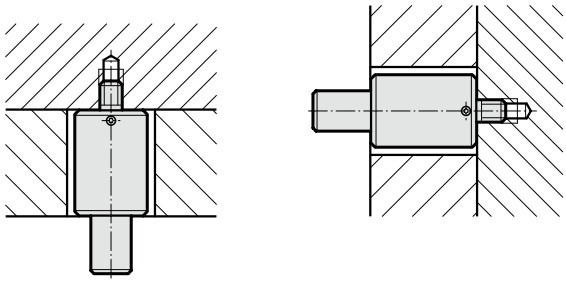

Gas spring with male fixing thread, POWERLINE

Note:

Initial spring force at 150 bar = 920 daN

Order No for spare parts kit: 2487.12.01000

Pressure medium: Nitrogen N_2
Max. filling pressure: 150 bar
Min. filling pressure: 25 bar
Working temperature: 0°C to +80°C
Temperature related force increase: ± 0.3%/°C
Max. recommended extensions per minute: approx. 50 to 100 (at 20°C)
Max. piston speed: 1.6 m/s

2487.82.01000.

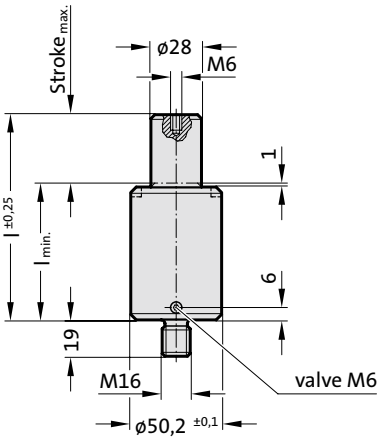

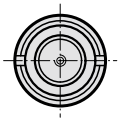



APPROVED PED 97/23/EC

S>max | V>max | P>max | Flex Guide™

2487.82.01000.

Gas spring with male fixing thread, POWERLINE

Order No	Stroke max.	l min.	l
2487.82.01000.013	13	51	64
2487.82.01000.016	16	54	70
2487.82.01000.019	19	57	76
2487.82.01000.025	25	63	88
2487.82.01000.032	32	70	102
2487.82.01000.038	38	76	114
2487.82.01000.050	50	88	138
2487.82.01000.063	63	101	164
2487.82.01000.075	75	113	188
2487.82.01000.080	80	118	198
2487.82.01000.100	100	138	238
2487.82.01000.125	125	163	288

Initial spring force versus charge pressure

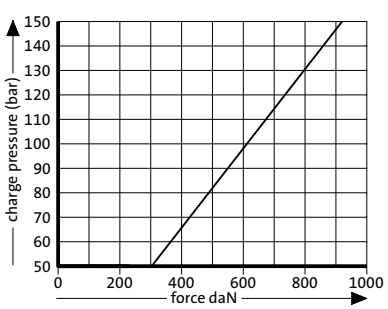

Spring force Diagram displacement versus stroke rise

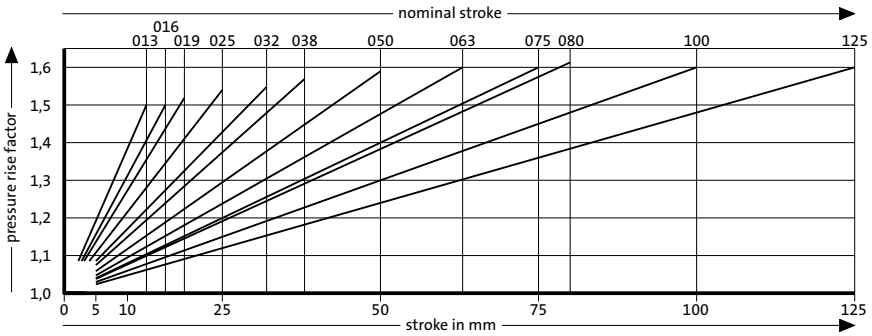

Pressure rise factor accounts for displacement but not external influences!

Gas spring with hexagonal flange



2480.33.

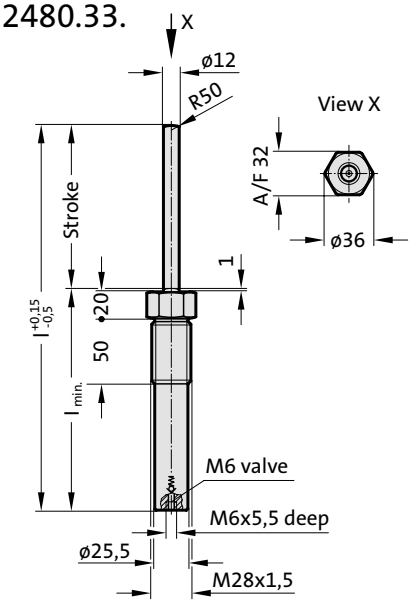

Description:

The gas springs are colour-coded according to the spring force rating ranges 15–50–100–150–200 daN.

All springs, regardless of their spring force ratings, are of the same design. The differing force ratings result exclusively from the differing charge pressures.
Do take into consideration the colour-coded pressure rating during repair work and recharging.

Note:

Other stroke lengths avail on request! See gas spring 2480.32.

Order No for spare parts kit: 2480.21.00150

Pressure medium: Nitrogen N_2
Max. filling pressure: 180 bar
Min. filling pressure: 13 bar
Working temperature: 0°C to +80°C
Temperature related force increase: ± 0.3%/°C
Max. recommended extensions per minute: approx. 80 to 100 (at 20°C)
Max. piston speed: 1.6 m/s

APPROVED PED 97/23/EC



2480.33. Gas spring with hexagonal flange

Order No	Stroke$_{max.}$	$l_{min.}$	l	Spring force [daN] initial	Colour
2480.33.00015.125	125	167	292	15	schwarz
2480.33.00050.125	125	167	292	50	grün
2480.33.00100.125	125	167	292	100	blau
2480.33.00150.125	125	167	292	150	rot
2480.33.00200.125	125	167	292	200	gelb

Initial spring force
versus charge pressure

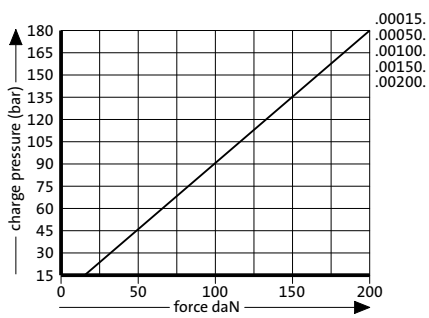

Spring force Diagram displacement versus stroke rise

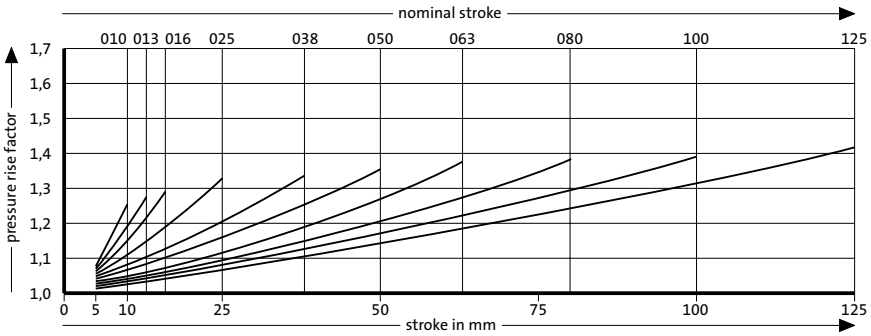

Pressure rise factor accounts for displacement but not external influences!

subject to alterations



Gas springs for working temperatures up to 120 ° C

see chapter L:
Gas springs Mould Line



LCF gas springs, damped

LCF gas springs, damped

Description

The LCF series represents a whole new generation of nitrogen-filled gas springs developed to meet the needs of the machine tool and press-making industries.

Negative factors such as

- high impact stresses
- excessive noise
- extreme bounce off the pad

are all minimised by LCF springs.

Characteristics such as

- dimensions
- fixing methods
- filling with gas and purging
- working in interconnected systems

are identical to those for standard ISO or type 2480.13 gas springs.

The springs from the LCF series reduce impact stresses by 50% compared to conventional gas springs.

The force builds up gradually and acceleration is uniform, reducing wear on both tool and press. As a result, less maintenance is required.

LCF springs are at least 20% quieter than standard gas springs.

The reduced noise level is due to the lower impact force, making these springs a cost-effective alternative to soundproofing panels. They are thus more economical and environmentally-friendly.

The LCF springs reduce the extreme bounce off the pad during the return stroke, thus lessening vibration on the workpiece and allowing the workpiece to be transported more effectively.

Since the spring travel is damped, the pad motion is more uniform, so in many cases the press stroke rate and thus productivity can be increased.

* LCF Force Manager ist ein Warenzeichen der Associated Spring

LCF gas springs, damped

2484.13. Force diagram for gas springs

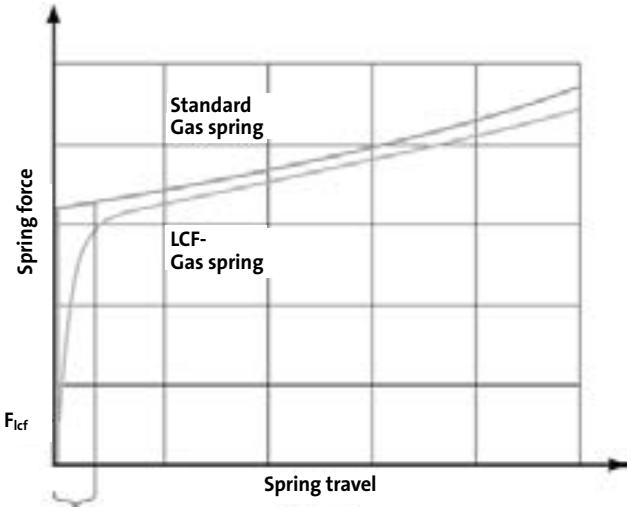

Damped spring travel S_1

With the springs from the LCF series, the force builds up gradually and acceleration is uniform.

Measured dynamic piston force, Measured values for the 5000th series

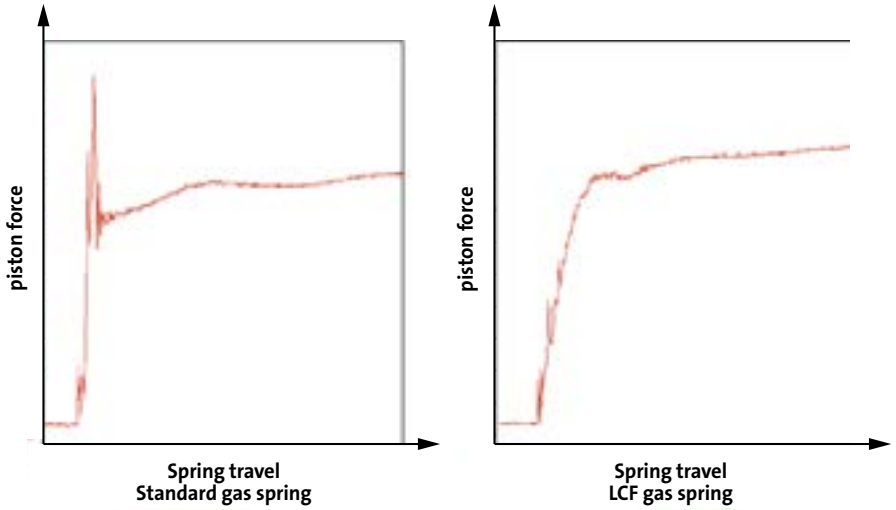

Comparative press load diagram

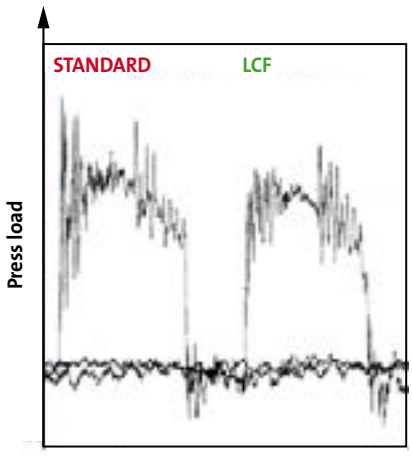

Noise reduction

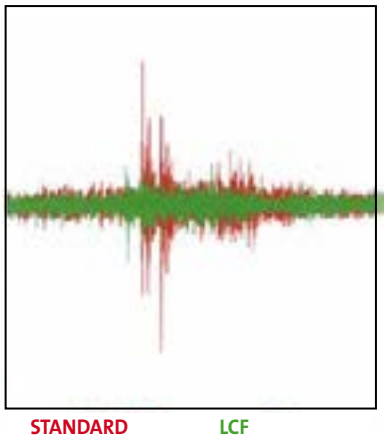

The springs from the LCF series are quieter due to the reduced impact force.

LCF gas springs, damped

2484.13. Force diagram for gas springs

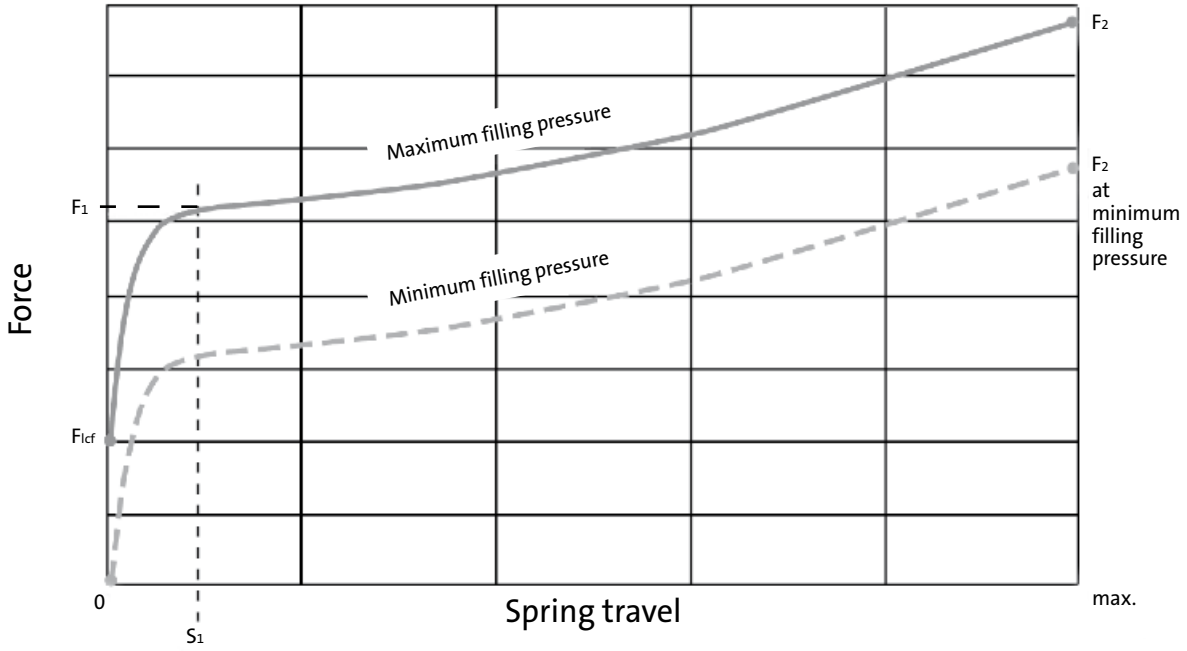

Note: Maximum pressure for LCF gas springs: 150 bar. Observe minimum filling pressure.

Guidelines for the use of LCF gas springs

1. After the damped spring travel (S_1) the LCF gas spring achieves the same initial spring force (F_1) and pressure build up as the standard gas spring (to ISO).
2. The spring force (F_{lcf}) should exceed the weight (e.g. the pad) by at least 15% so that it is held in the correct position (this does not apply in the case of minimum filling pressure).

Spring Size	F_{lcf} bei 150 bar in daN	Damped spring travel S_1	Minimum filling pressure in bar
2484.13.00750.	470	3,1	70
2484.12.01500.	700	4,6	105
2484.13.03000.	1600	3,8	69
2484.13.05000.	2500	7,7	76
2484.13.07500.	3000	10,4	90

LCF gas spring, damped
Mounting variations

2480.011.00750.3

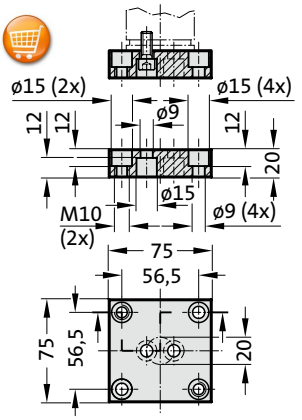

2480.011.00750

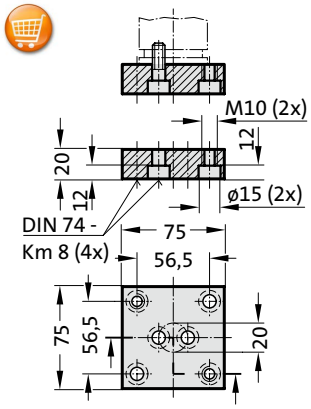

2480.011.00750.1

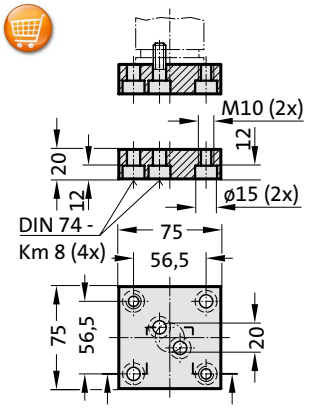

2480.022.00750

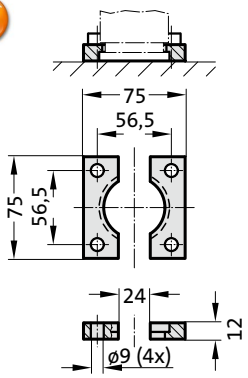

2480.055.00750

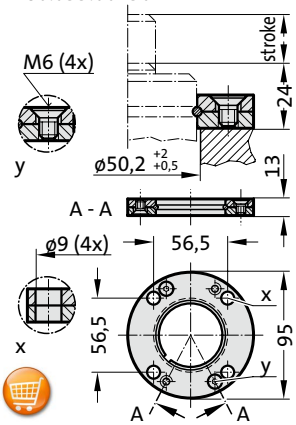

2480.057.00750

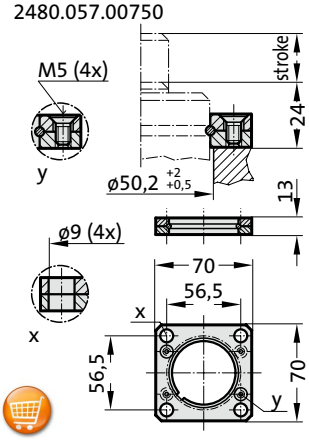

2480.007.00750

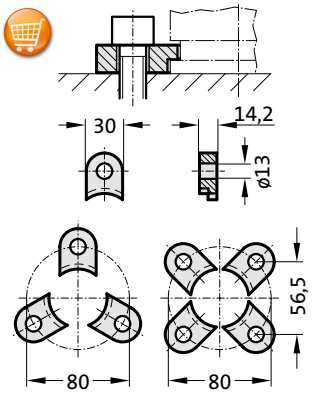

2480.008.00750 3)

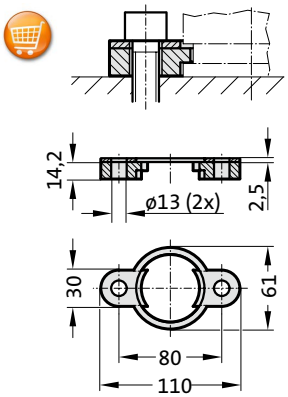

2480.064.00750 4)

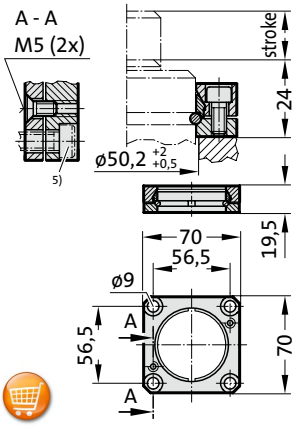

2480.044.00750 2)

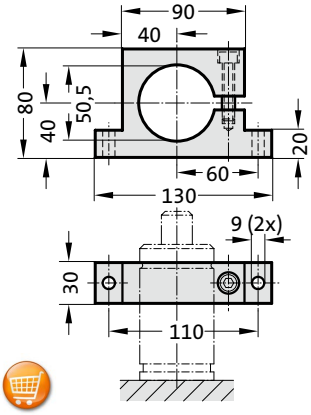

2480.010.00750.115 3)
2480.010.00750.190* 3)

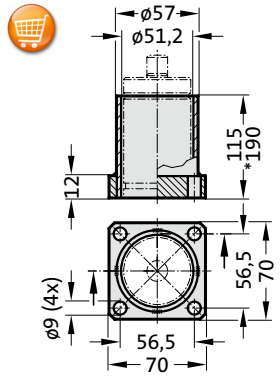

2480.045.00750 2)

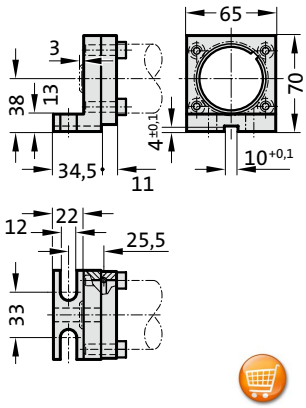

2480.047.00750 2)

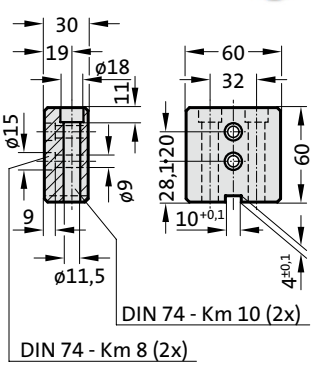

2480.044.03.00750 2)

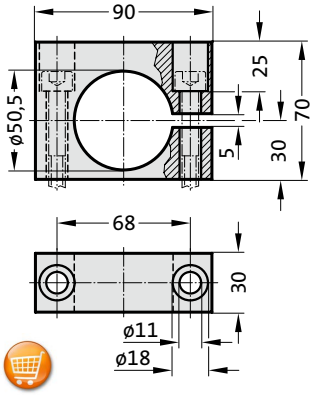

Note:

2) Attention:
The spring force must be absorbed by the stop surface!

3) Not for use with composite connection.

4) Square collar flange, non-rotating, fixing for composite connection.

5) Machine screws with hexagonal socket (compact head recommended)

Gas spring LCF, damped

Note:

Initial spring force F_{lcf} at 150 bar = 470 daN
Full spring force after 3.1 mm damped spring travel

Order No for spare parts kit: 2484.13.00750

Pressure medium: Nitrogen N_2
Max. filling pressure: 150 bar
Min. filling pressure: 70 bar
Working temperature: 0°C to +80°C
Temperature related force increase: ± 0.3%/°C
Max. recommended extensions per minute: approx. 15 to 40 (at 20°C)
Max. piston speed: 1.6 m/s

2484.13.00750.

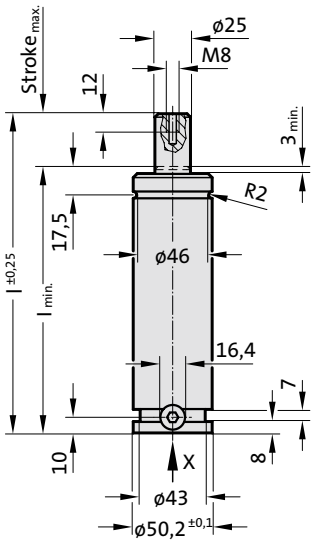

View X - Gas spring

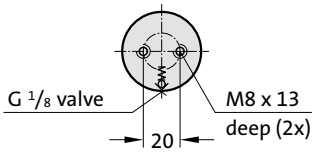



APPROVED PED 97/23/EC

S>max V>max P>max

2484.13.00750.
Gas spring LCF, damped

Order No	Stroke max.	l min.	l
2484.13.00750.013	12.7	107.7	120.4
2484.13.00750.025	25	120	145
2484.13.00750.038	38.1	133.1	171.2
2484.13.00750.050	50	145	195
2484.13.00750.063	63.5	158.5	222
2484.13.00750.080	80	175	255
2484.13.00750.100	100	195	295
2484.13.00750.125	125	220	345
2484.13.00750.160	160	255	415
2484.13.00750.200	200	295	495
2484.13.00750.250	250	345	595
2484.13.00750.300	300	395	695

Initial spring force
versus charge pressure

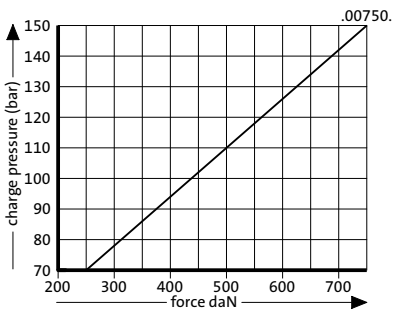

Spring force Diagram displacement versus stroke rise

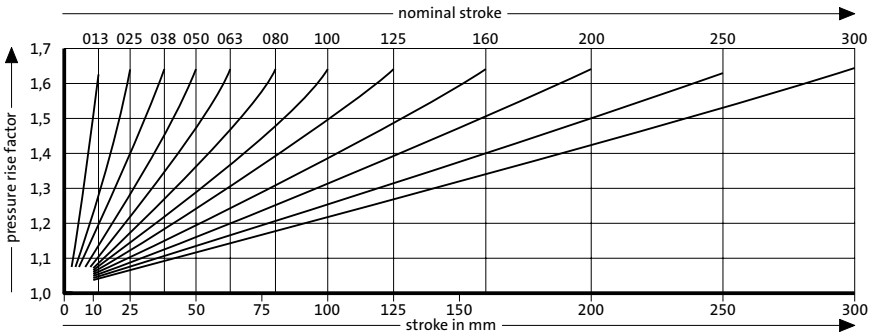

Pressure rise factor accounts for displacement but not external influences!

FIBRO

LCF gas spring, damped
Mounting variations

2480.011.01500

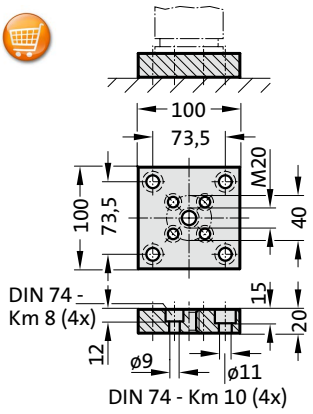

2480.011.01500.2

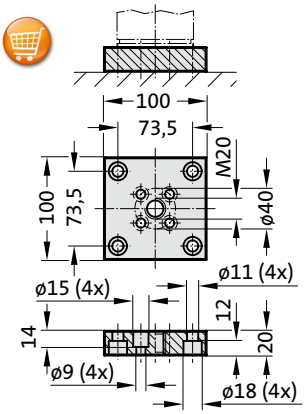

2480.022.01500

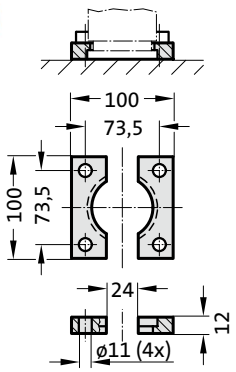

2480.055.01500

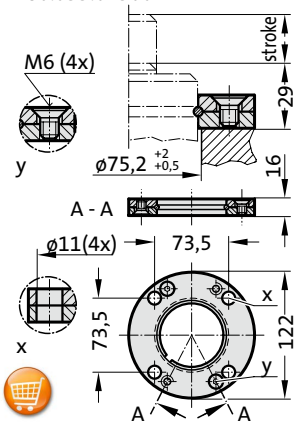

2480.057.01500

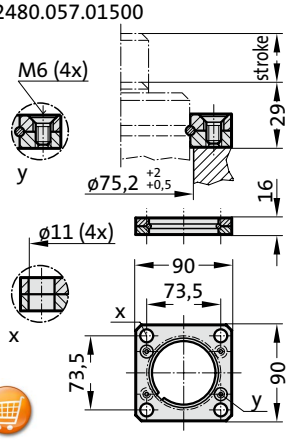

2480.007.01500

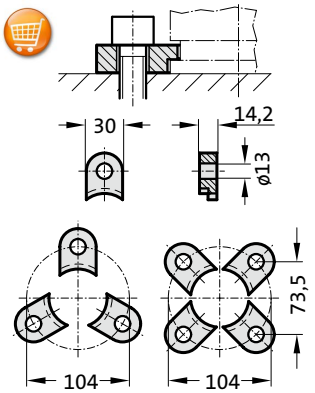

2480.008.01500 3)

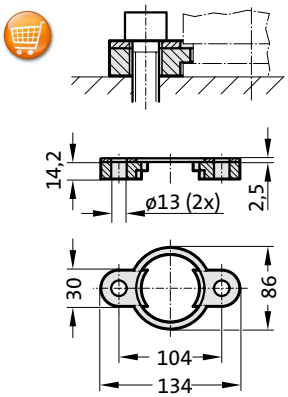

2480.064.01500 4)

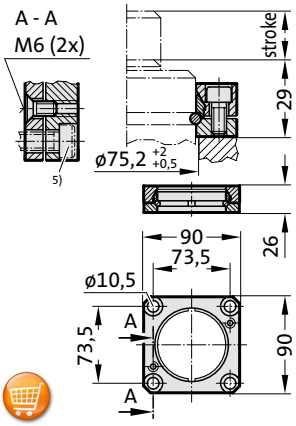

2480.044.01500 2)

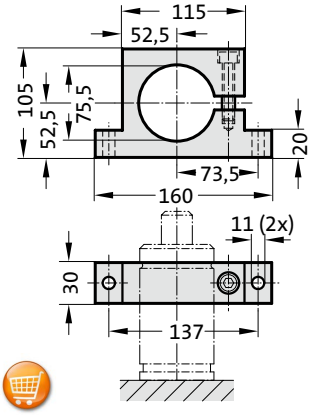

2480.010.01500.130 3)
2480.010.01500.205* 3)

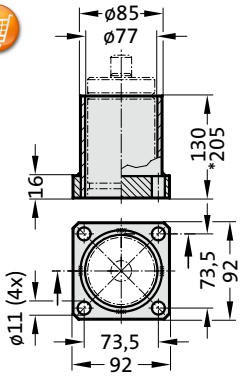

2480.045.01500 2)

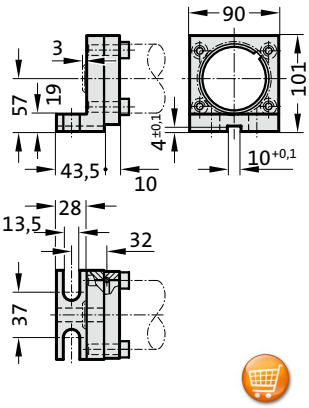

2480.047.01500 2)

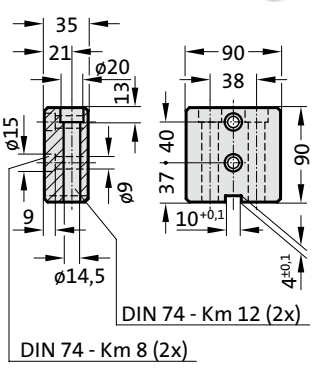

2480.044.03.01500 2)

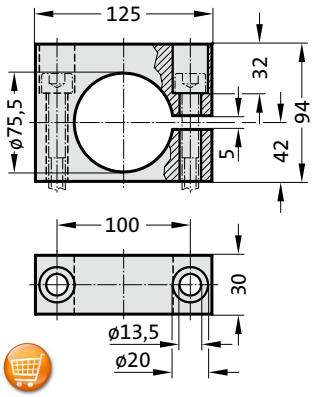

Note:

2) Attention:
The spring force must be absorbed by the stop surface!

3) Not for use with composite connection.

4) Square collar flange, non-rotating, fixing for composite connection.

5) Machine screws with hexagonal socket (compact head recommended)

Gas spring LCF, damped

Note:

Initial spring force F_{lcf} at 150 bar = 700 daN
Full spring force after 4.6 mm damped spring travel

Order No for spare parts kit: 2484.12.01500

Pressure medium: Nitrogen N_2
Max. filling pressure: 150 bar
Min. filling pressure: 105 bar
Working temperature: 0°C to +80°C
Temperature related force increase: ± 0.3%/°C
Max. recommended extensions per minute: approx. 15 to 40 (at 20°C)
Max. piston speed: 1.6 m/s

2484.12.01500.

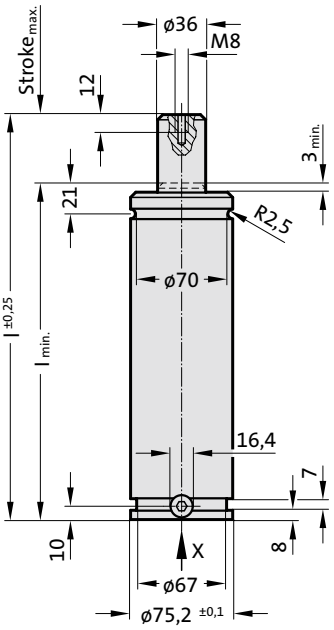

View X - Gas spring

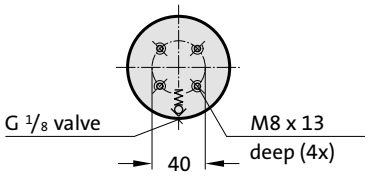



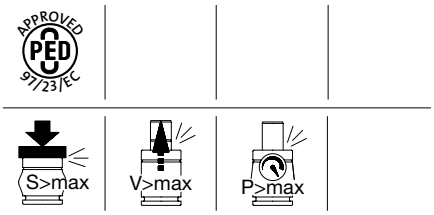

2484.12.01500.
Gas spring LCF, damped

Order No	Stroke max.	l min.	l
2484.12.01500.025	25	135	160
2484.12.01500.038	38.1	148.1	186.2
2484.12.01500.050	50	160	210
2484.12.01500.063	63.5	173.5	237
2484.12.01500.080	80	190	270
2484.12.01500.100	100	210	310
2484.12.01500.125	125	235	360
2484.12.01500.160	160	270	430
2484.12.01500.200	200	310	510
2484.12.01500.250	250	360	610
2484.12.01500.300	300	410	710

Initial spring force
versus charge pressure

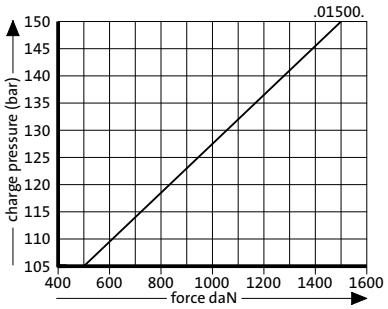

Spring force Diagram displacement versus stroke rise

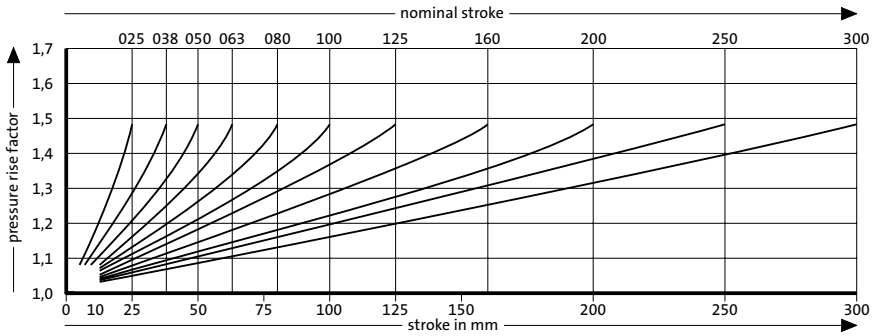

Pressure rise factor accounts for displacement but not external influences!

FIBRO

LCF gas spring, damped
Mounting variations

2480.011.03000

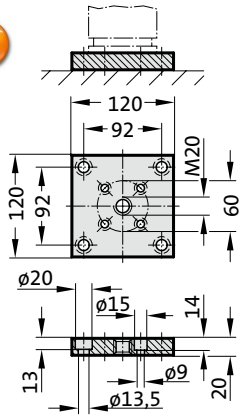

2480.011.03000.2

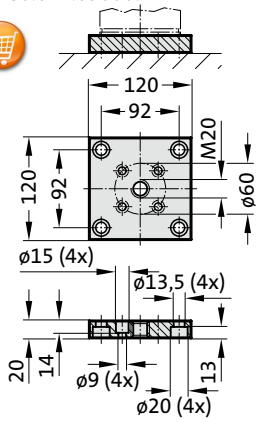

2480.022.03000

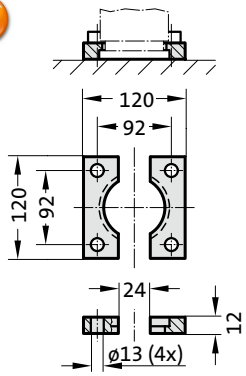

2480.055.03000

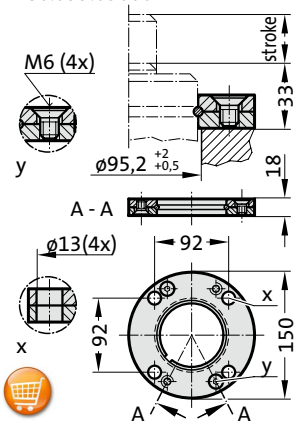

2480.057.03000

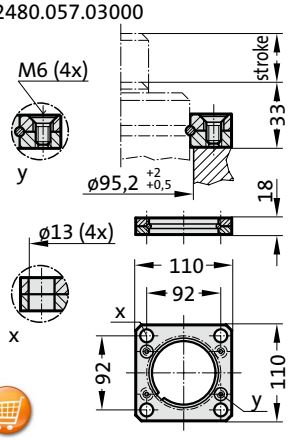

2480.007.03000

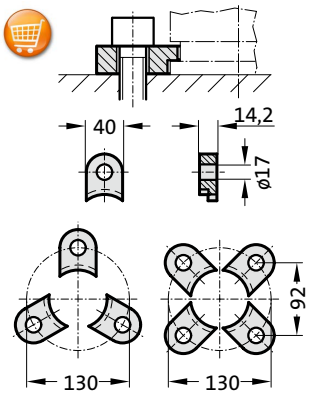

2480.008.03000 3)

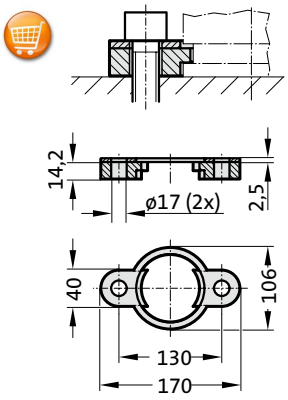

2480.064.03000 4)

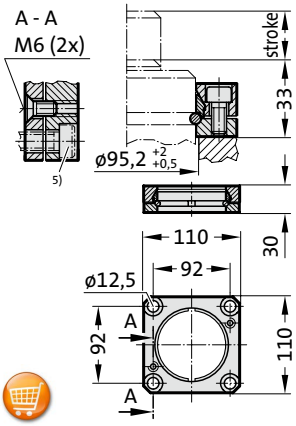

2480.044.03000 2)

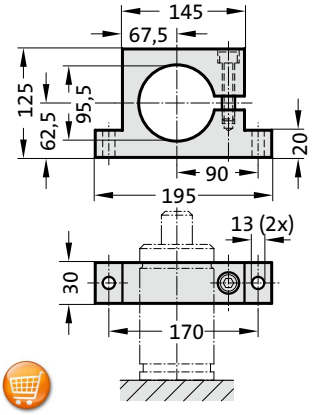

2480.010.03000.140 3)
2480.010.03000.215* 3)

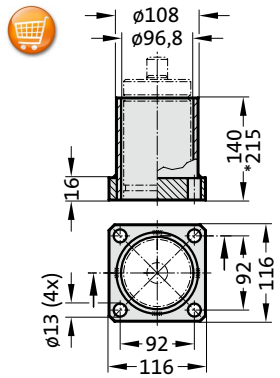

2480.045.03000 2)

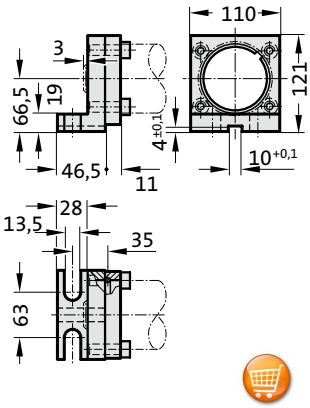

2480.047.03000 2)

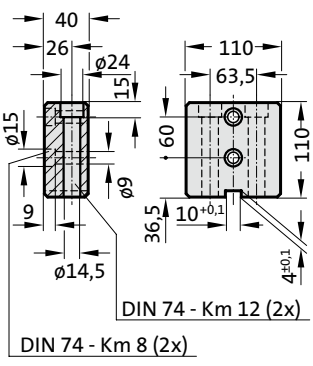

2480.044.03.03000 2)

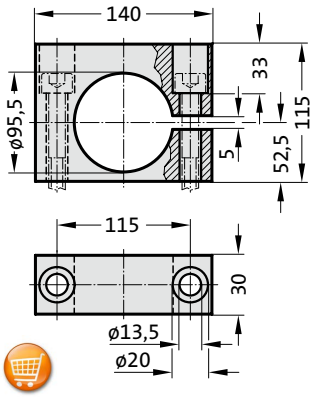

Note:

2) Attention:
The spring force must be absorbed by the stop surface!

3) Not for use with composite connection.

4) Square collar flange, non-rotating, fixing for composite connection.

5) Machine screws with hexagonal socket (compact head recommended)

Gas spring LCF, damped

Note:

Initial spring force F_{lcf} at 150 bar =1600 daN
Full spring force after 3.8 mm damped spring travel

Order No for spare parts kit: 2484.13.03000

Pressure medium: Nitrogen N_2
Max. filling pressure: 150 bar
Min. filling pressure: 68 bar
Working temperature: 0°C to +80°C
Temperature related force increase: ± 0.3%/°C
Max. recommended extensions per minute: approx. 15 to 40 (at 20°C)
Max. piston speed: 1.6 m/s

2484.13.03000.

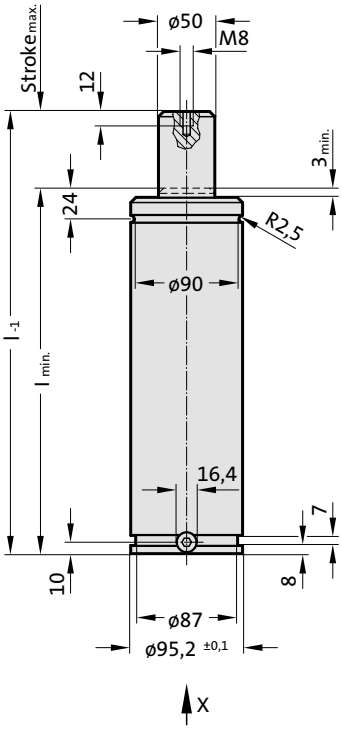

View X - Gas spring

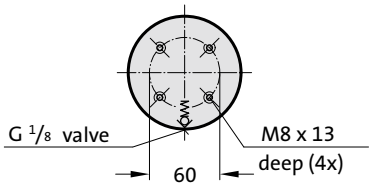



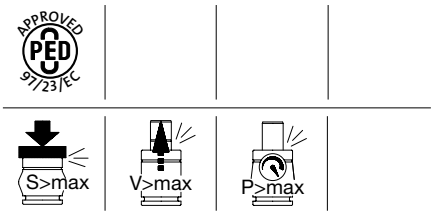

2484.13.03000.
Gas spring LCF, damped

Order No	Stroke$_{max.}$	l$_{min.}$	l
2484.13.03000.025	25	145	170
2484.13.03000.038	38.1	158.1	196.2
2484.13.03000.050	50	170	220
2484.13.03000.063	63.5	183.5	247
2484.13.03000.080	80	200	280
2484.13.03000.100	100	220	320
2484.13.03000.125	125	245	370
2484.13.03000.160	160	280	440
2484.13.03000.200	200	320	520
2484.13.03000.250	250	370	620
2484.13.03000.300	300	420	720

Initial spring force
versus charge pressure

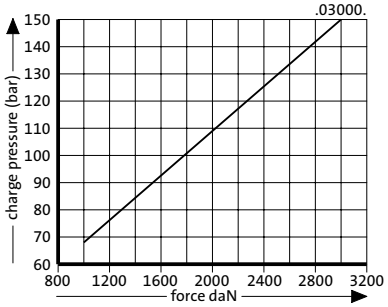

Spring force Diagram displacement versus stroke rise

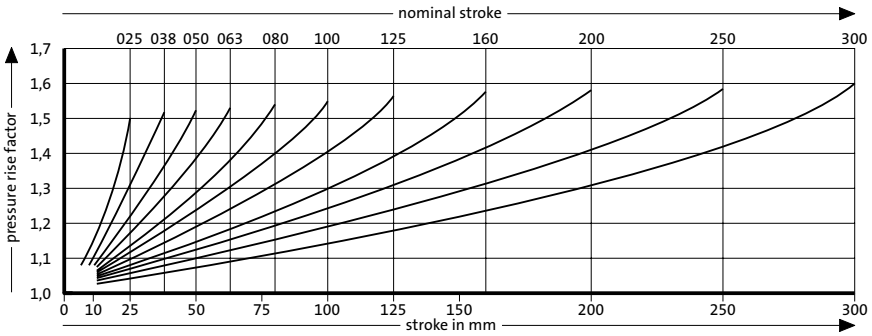

Pressure rise factor accounts for displacement but not external influences!

FIBRO

LCF gas spring, damped
Mounting variations

2480.011.05000

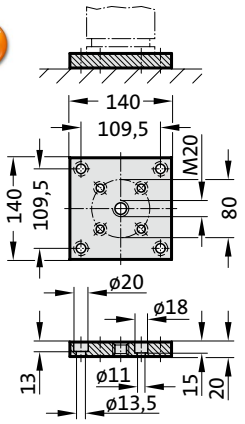

2480.011.05000.2

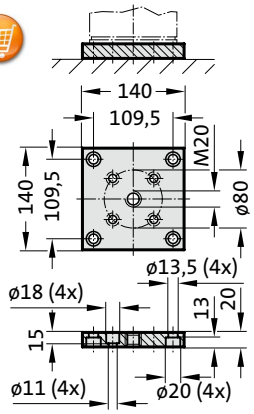

2480.022.05000

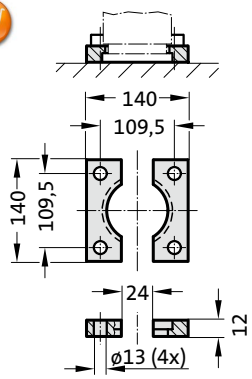

2480.055.05000

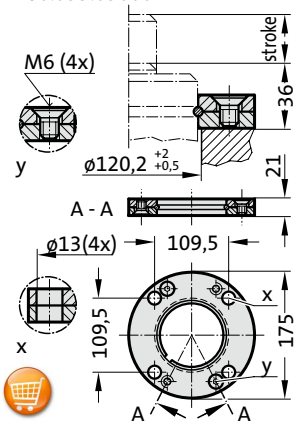

2480.057.05000

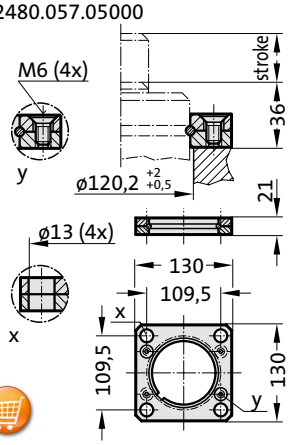

2480.007.05000

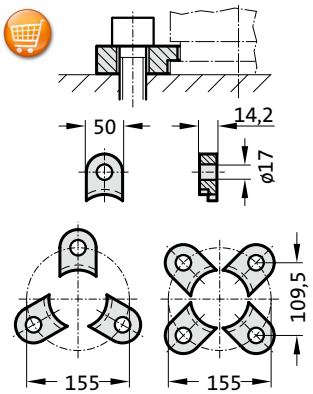

2480.008.05000 3)

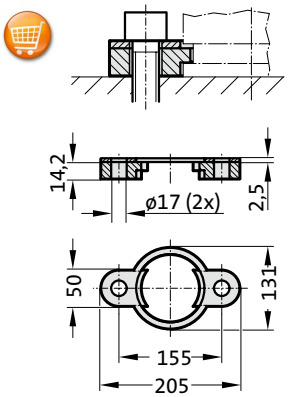

2480.064.05000 4)

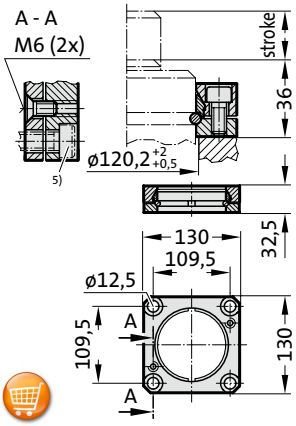

2480.044.05000 2)

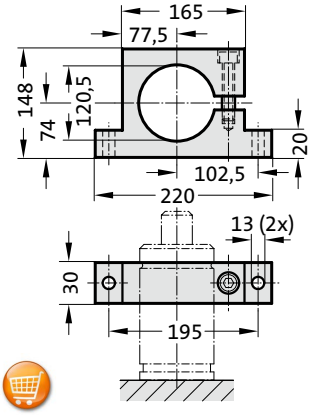

2480.010.05000.160 3)

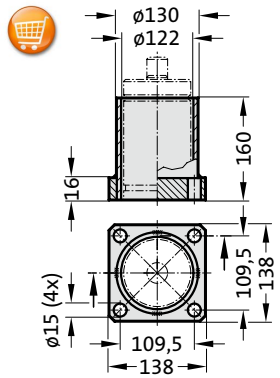

2480.045.05000 2)

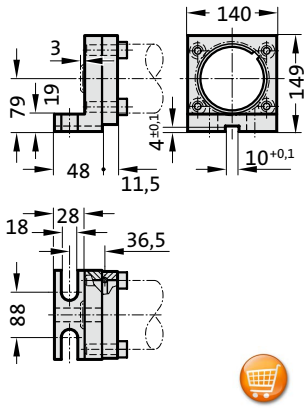

2480.047.05000 2)

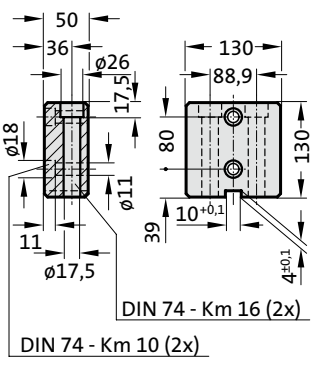

2480.044.03.05000 2)

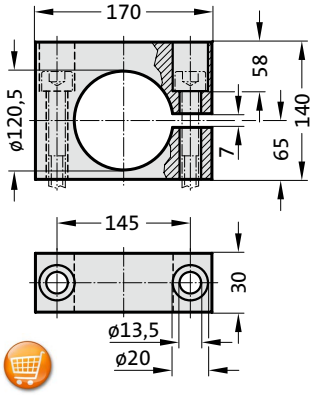

Note:

2) Attention:
The spring force must be absorbed by the stop surface!

3) Not for use with composite connection.

4) Square collar flange, non-rotating, fixing for composite connection.

5) Machine screws with hexagonal socket (compact head recommended)

Gas spring LCF, damped

Note:

Initial spring force F_{lcf} at 150 bar =2500 daN
Full spring force after 7.7 mm damped spring travel

Order No for spare parts kit: 2484.13.05000

Pressure medium: Nitrogen N_2
Max. filling pressure: 150 bar
Min. filling pressure: 75 bar
Working temperature: 0°C to +80°C
Temperature related force increase: ± 0.3%/°C
Max. recommended extensions per minute: approx. 15 to 40 (at 20°C)
Max. piston speed: 1.6 m/s

2484.13.05000.

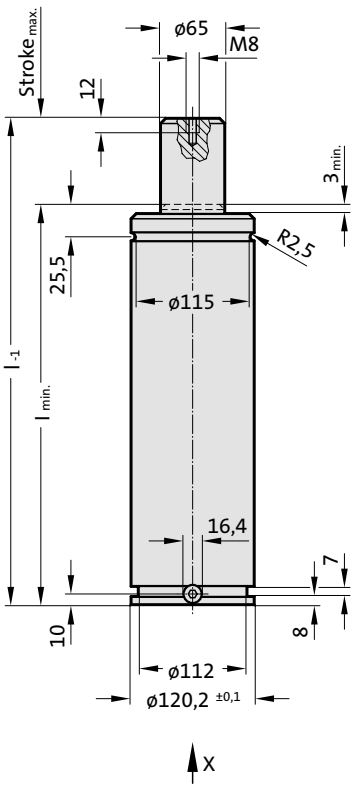

View X - Gas spring

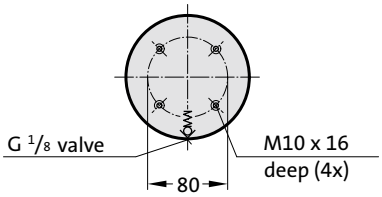



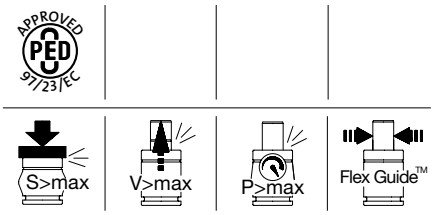

2484.13.05000.
Gas spring LCF, damped

Order No	Stroke max.	l min.	l
2484.13.05000.025	25	165	190
2484.13.05000.038	38.1	178.1	216.2
2484.13.05000.050	50	190	240
2484.13.05000.063	63.5	203.5	267
2484.13.05000.080	80	220	300
2484.13.05000.100	100	240	340
2484.13.05000.125	125	265	390
2484.13.05000.160	160	300	460
2484.13.05000.200	200	340	540
2484.13.05000.250	250	390	640
2484.13.05000.300	300	440	740

Initial spring force
versus charge pressure

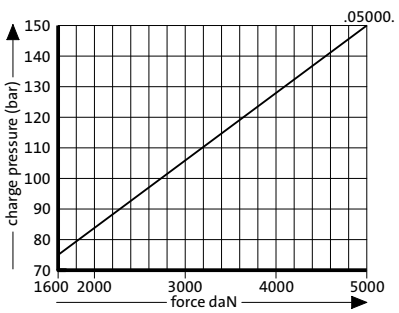

Spring force Diagram displacement versus stroke rise

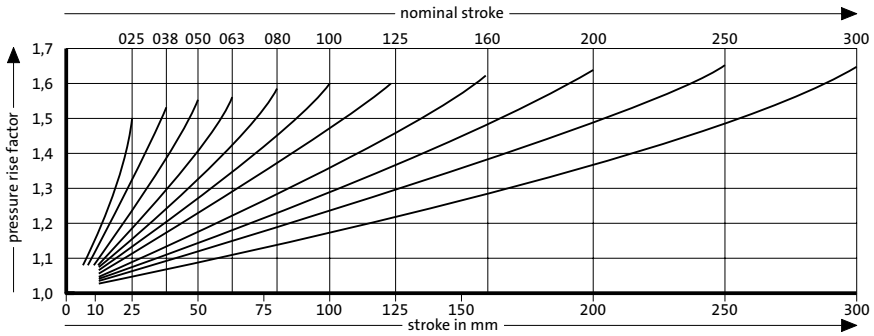

Pressure rise factor accounts for displacement but not external influences!

FIBRO

LCF gas spring, damped
Mounting variations

2480.011.07500

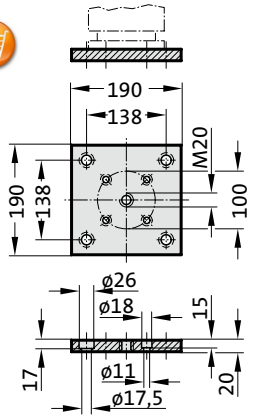

2480.011.07500.2

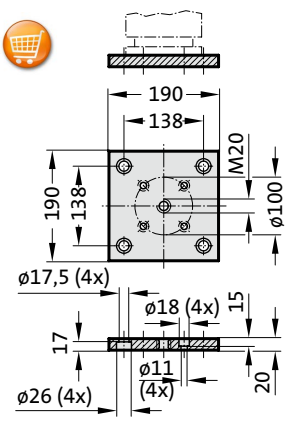

2480.022.07500

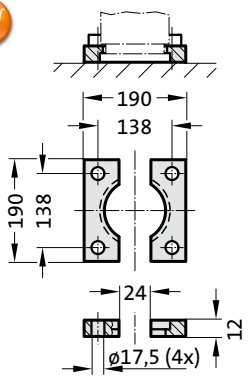

2480.055.07500

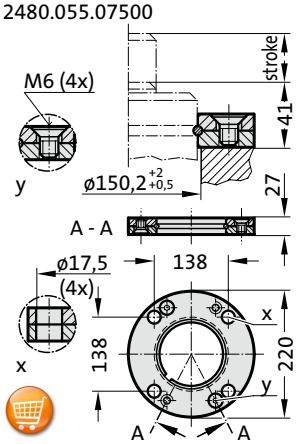

2480.057.07500

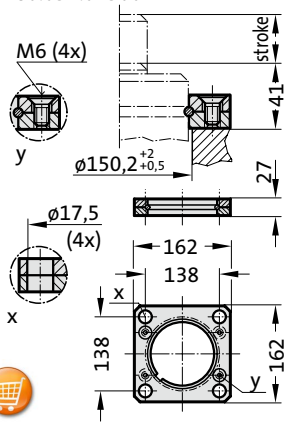

2480.007.07500

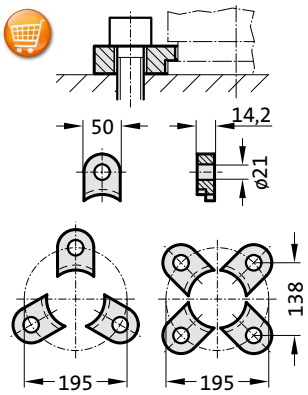

2480.008.07500 [3]

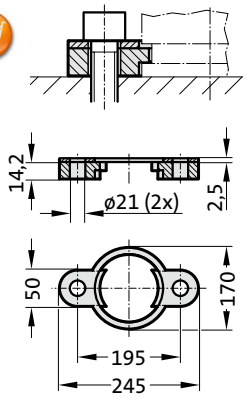

2480.064.07500 [4]

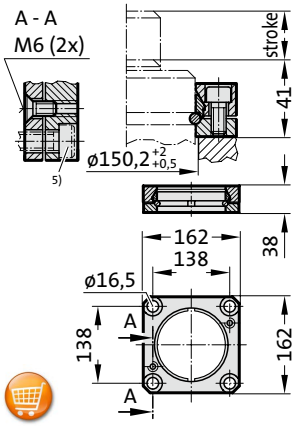

2480.044.07500 [2]

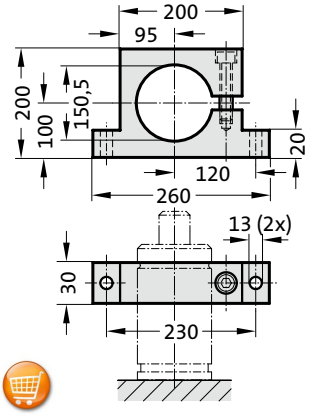

2480.044.03.07500 [2]

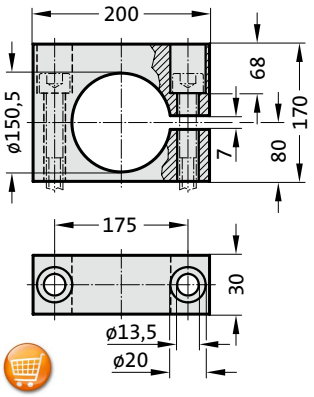

Note:

[2] Attention:
The spring force must be absorbed by the stop surface.

[3] Note:
Not for use with composite connection.

[4] Square collar flange, non-rotating, fixing for composite connection.

[5] Machine screws with hexa-gonal socket (compact head recommended).

Gas spring LCF, damped

Note:

Initial spring force F_{lcf} at 150 bar =3000 daN
Full spring force after 10.4 mm damped spring travel

Order No for spare parts kit: 2484.13.07500

Pressure medium: Nitrogen N_2
Max. filling pressure: 150 bar
Min. filling pressure: 89 bar
Working temperature: 0°C to +80°C
Temperature related force increase: ± 0.3%/°C
Max. recommended extensions per minute: approx. 15 to 40 (at 20°C)
Max. piston speed: 1.6 m/s

2484.13.07500.

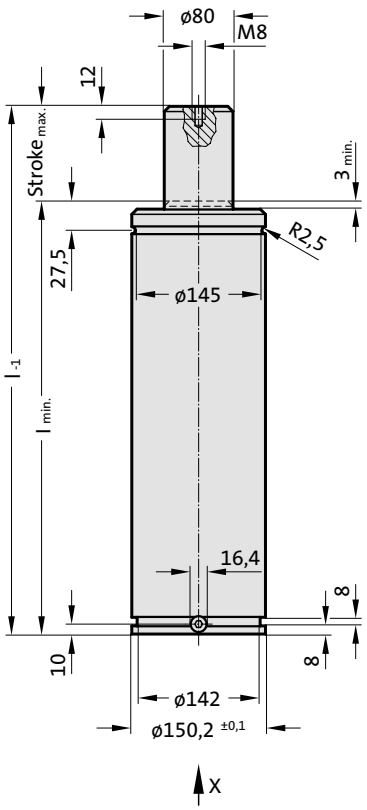

View X - Gas spring

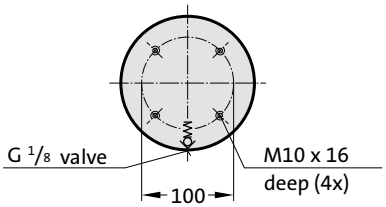



APPROVED PED 97/23/EC

S>max V>max P>max Flex Guide™

2484.13.07500.
Gas spring LCF, damped

Order No	Stroke max.	l min.	l
2484.13.07500.025	25	180	205
2484.13.07500.038	38.1	193.1	231.2
2484.13.07500.050	50	205	255
2484.13.07500.063	63.5	218.5	282
2484.13.07500.080	80	235	315
2484.13.07500.100	100	255	355
2484.13.07500.125	125	280	405
2484.13.07500.160	160	315	475
2484.13.07500.200	200	355	555
2484.13.07500.250	250	405	655
2484.13.07500.300	300	455	755

Initial spring force
versus charge pressure

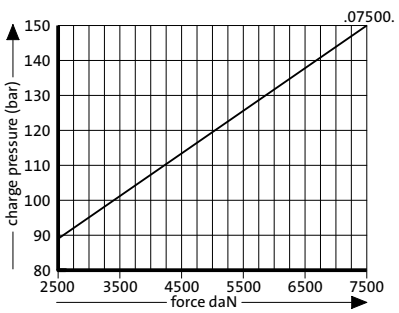

Spring force Diagram displacement versus stroke rise

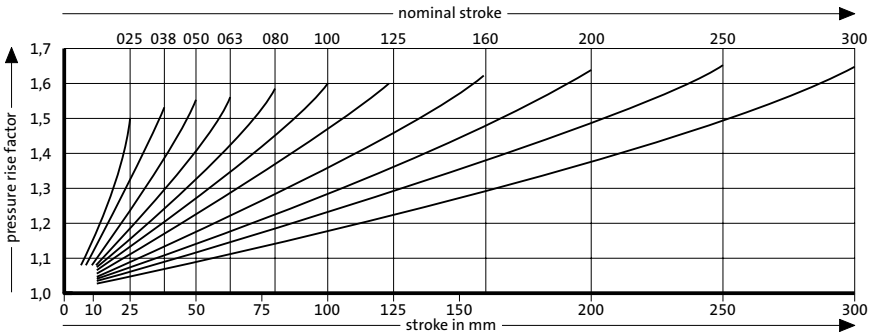

Pressure rise factor accounts for displacement but not external influences!



Controllable Gas springs

PATENTED

Please request your catalogue



Air springs to VW Standard

Please request your catalogue



Manifold-systems

Please request your catalogue

PDF
DOWNLOAD



Composite plates

Please request your catalogue

11.2014



Gas spring Accessories

Pressure reservoir
for reduced pressure rise

2480.00.70.

Base plate for
for 2480.00.70.075. ...

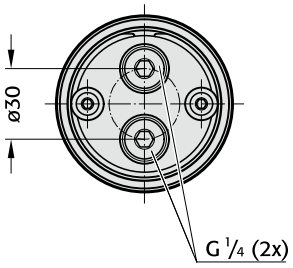

Base plate for
for 2480.00.70.095. ...
for 2480.00.70.120. ...

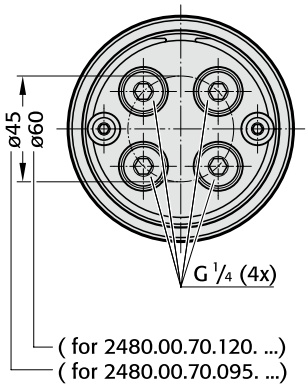

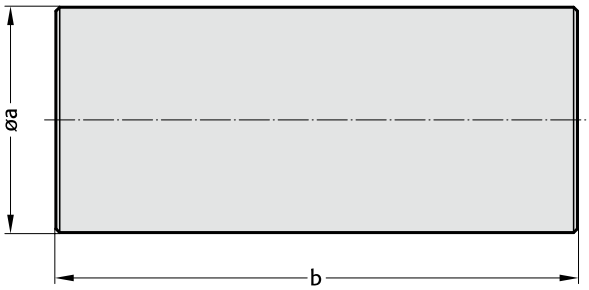

Description:

The pressure reservoir and its base plates are manufactured from the same high grade steel als FIBRO gas springs. The advantage of including a pressure reservoir in the system is that in operation the gas pressure rises to a lesser extent. Apart from the purely tecnical pressure factors, a reduced pressure rise is beneficial to the service life of the system.

Function:

The pressure reservoir has two or four mounting holes with G¼“ at both sides, which are designed for connection to the control fitting or gas spring.

Note:

If a pressure reservoir is to be installed, we recommend the 24°-cone-system, which ensures that the gas flow is not inhibited. Mounting clamps should be ordered separately. At least 2 are required for each pressure reservoir, see following pages.

2480.00.70. Pressure reservoir

Order No.	Volume in l [litres]	∅a	b
2480.00.70.075.0170	0,25	75	170
2480.00.70.075.0250	0,50	75	250
2480.00.70.075.0410	1,0	75	410
2480.00.70.095.0300	1,0	95	300
2480.00.70.095.0500	2,0	95	500
2480.00.70.095.0700	3,0	95	700
2480.00.70.095.0900	4,0	95	900
2480.00.70.120.0360	2,0	120	360
2480.00.70.120.0615	4,0	120	615
2480.00.70.120.1125	8,0	120	1125

Ordering Code (example):

Pressure reservoir	= 2480.00.70.
∅a = 75 mm	= 075.
b = 170 mm	= 0170
Order No.	= 2480.00.70.075.0170

Gas spring size/daN	Piston rod area/dm²
.00500	0,031
.00750	0,049
.01500	0,102
.03000	0,196
.05000	0,332
.07500	0,503
.10000	0,709

Calculating the isothermic increase in pressure*

(*by approximation)

$$\text{Pressure increase} = \frac{V_a+(n\times V_g{}^{1)})}{V_a+(n\times(V_g{}^{1)}-\text{Stroke}\times A))}$$

V_a	[l]	Volume of pressure reservoir, see table
$V_g{}^{1)}$	[l]	Gas volume of gas springs, appropriate spring types
		[1)] Note: When designing gas volume of spring types, please contact us at FIBRO.
Stroke	[dm]	Travel of gas springs, appropriate spring types
A	[dm²]	For area of piston rods of the gas spring, see table
n		Number of gas springs

Calculation example:

10 gas springs, type 248.13.05000.050 with a travel of 50 mm (0,5 dm) are connected to a system with an 8 litres pressure reservoir.

$$\text{Pressure increase} = \frac{8\text{ l} + (10\times 0{,}51\text{ l})}{8\text{ l} + (10\times(0{,}51\text{ l} - 0{,}5\text{ dm}\times 0{,}332\text{ dm}^2))} = 1{,}145$$

subject to alterations

Pressure reservoir
for reduced pressure rise

2480.00.70. Installation example: 24°-cone-system

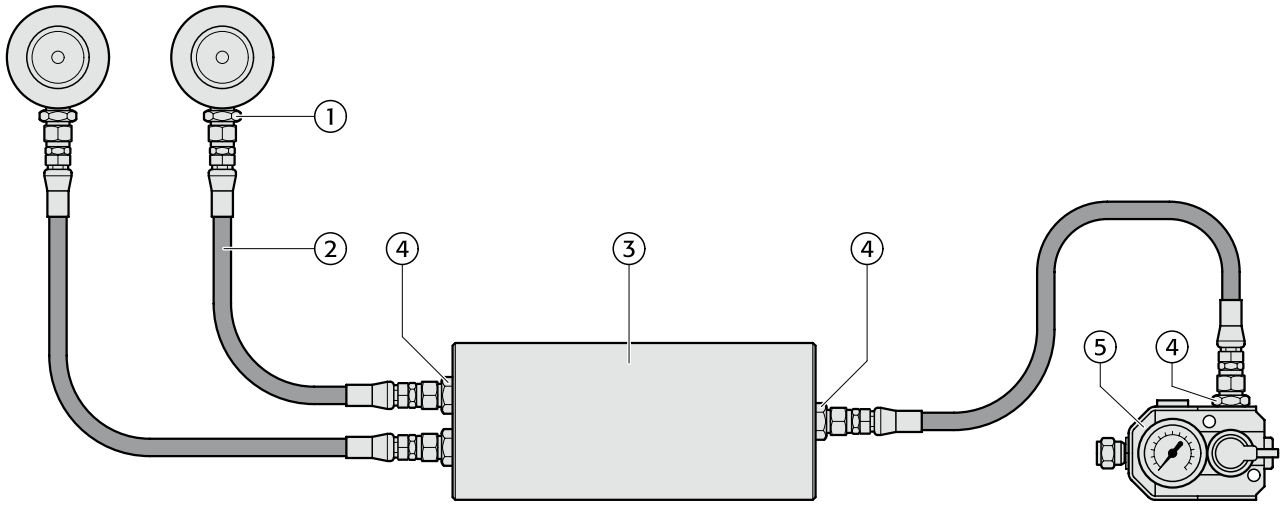

Item	Quantity	Description	Order No.
1	2	Connection thread G1/8	2480.00.26.03
2	3	24°-cone-hose	2480.00.25.01.☐ ☐ ☐ ☐
3	1	Pressure reservoir	2480.00.70. ☐ ☐ ☐.☐ ☐ ☐ ☐
4	4	Connection thread G1/4	2480.00.26.04
5	1	Monitoring unit	2480.00.31.01

Mounting clamp
for pressure reservoir

2480.00.70.

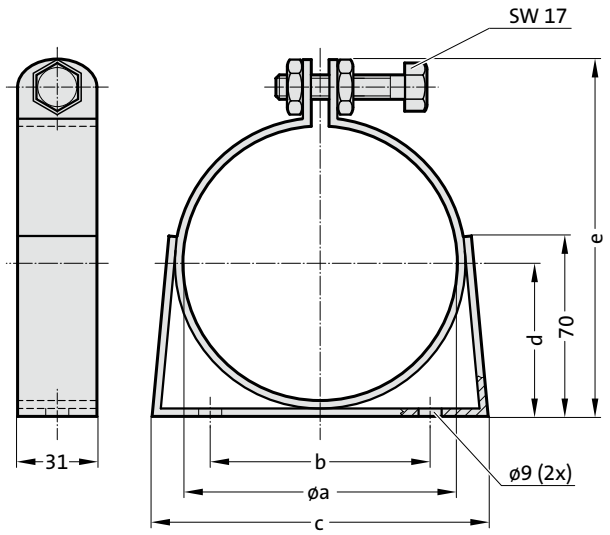

Description:

The mounting clamp is a rubber coated galvanised sheet steel ring and is used for mounting the FIBRO pressure reservoir.

Important:

At least 2 fixing clamps are required per pressure reservoir. If the pressure tank is to be mounted vertically,
it should be seated on a robust base.

Ordering Code (example):

Mounting clamp (1)	
for pressure reservoir	= 2480.00.70.
Øa = 75 mm	= 075
Order No.	= 2480.00.70.075

2480.00.70. Mounting clamp

Order No.	∅a	b	c	d	e
2480.00.70.075	75	80	105	41,5	102
2480.00.70.095	95	100	145	51,5	122
2480.00.70.120	120	100	145	64	147

Installation Example:

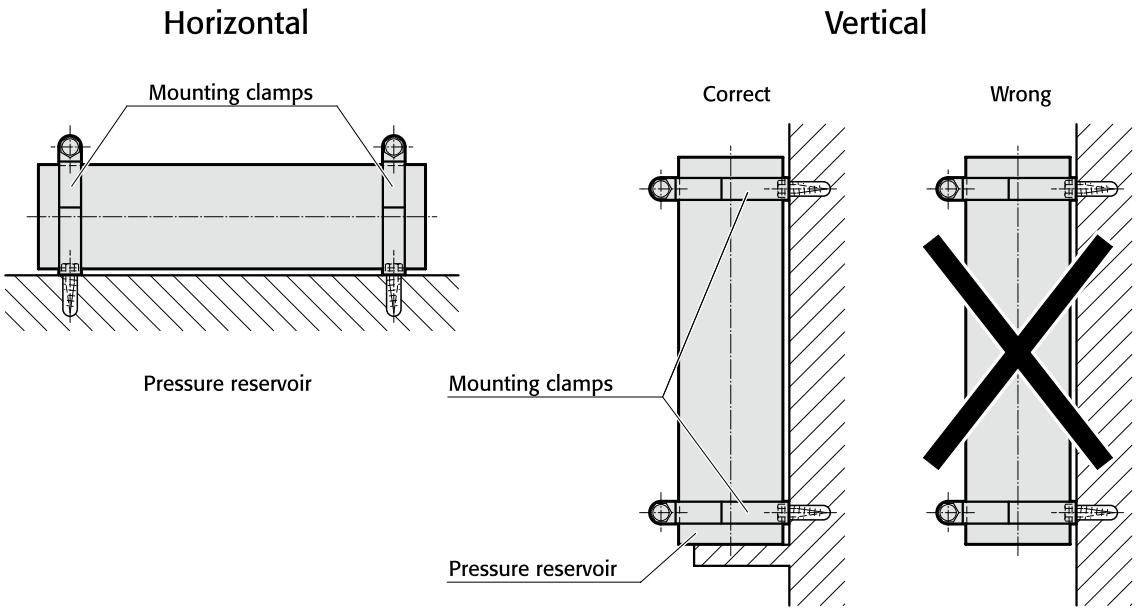

subject to alterations

Pressure plate, shock absorbing

2480.015.

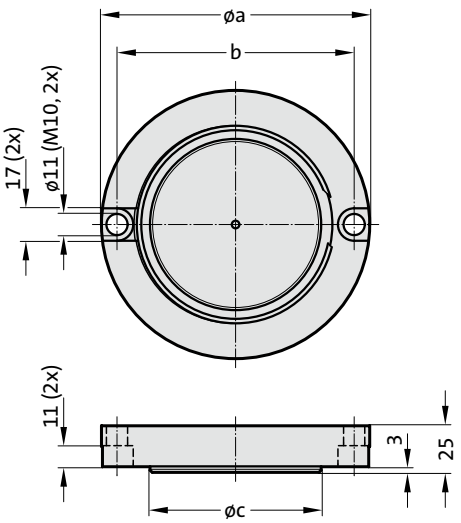



Installation example

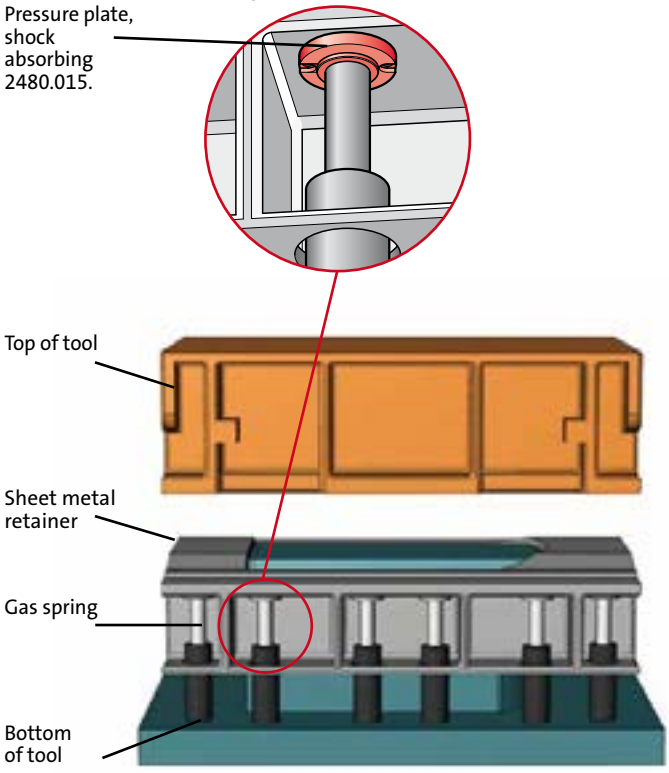

2480.015. Pressure plate

Order No.	Gas spring strength	a	b	c
2480.015.01500	750 – 1500	108	91	58
2480.015.05000	> 1500 – 6600	143	126	92
2480.015.10000	> 6600 – 10600	167	150	112

Description:

The shock absorbing pressure plate is designed to minimise the main problems in the metal forming industry.

A specially designed shock absorbing unit is designed to reduce:
– extreme impact loads
– consequent high costs for press maintenance
– high noise levels
– risk of production of lower quality parts.

Guidelines for using shock absorbing pressure plates with gas springs:

1. After the maximum shock absorbing travel of 3 mm the gas spring will reach the same initial spring force as it would without the shock absorbing pressure plate.
2. The shock absorbing pressure plate is mounted between the tool and the piston rod of the gas spring.

Material:

Steel, nitride
Polyurethane

Note:

Working temperature:	0 °C to 80 °C
Recommended max. strokes/min:	20
Max. press speed:	1.6 m/s
Max. shock absorbing travel:	3 mm

Function

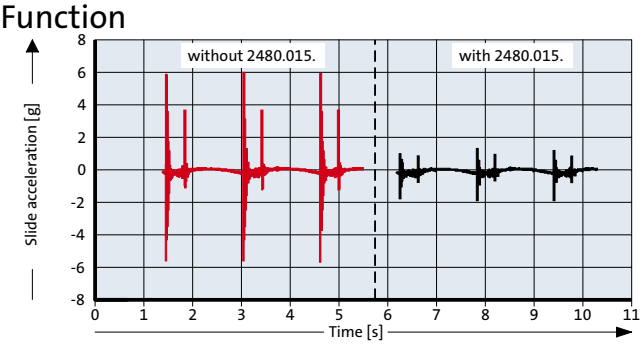

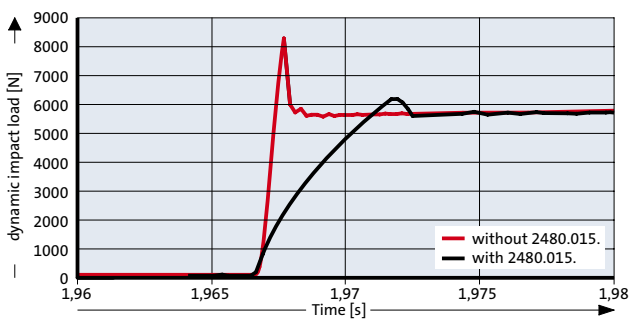

FIBRO

Thrust Pad
Thrust plate

2480.004.

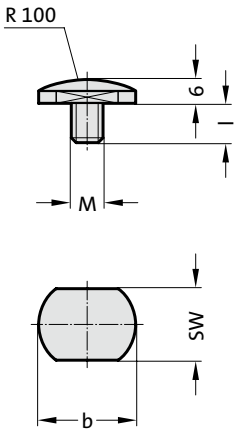

2480.004. Thrust Pad

Order No	Socket cap screw DIN EN ISO 4762	A/F	b	l
2480.004.06	M6	17	20	6
2480.004.08	M8	19	22.5	11

Description:
Trust pad for gas springs with M6 and M8 thread in the piston rod, not for 2480.13.00500.□□□

Material:
No 1.7131, case-hardened

2480.009.

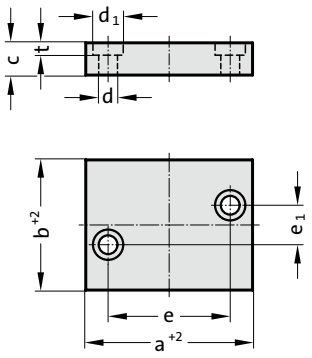

2480.009. Thrust plate

Order No*	max. piston rod diameter	a	b	c	d	d_1	e	e_1	t
2480.009.00250	15	50	25	12	7	11	32	8	7
2480.009.00500	20	55	30	12	7	11	40	14	7
2480.009.00500.1	20	55	32	16	9	15	37	-	10
2480.009.00750	25	70	35	15	9	15	48	14	9
2480.009.00750.1	36	65	50	16	9	15	47	-	10
2480.009.01500	36	75	50	15	9	15	56	30	9
2480.009.03000	50	85	60	15	9	15	66	40	9
2480.009.03000.1	50	80	60	16	9	15	62	-	10
2480.009.05000	65	100	80	20	11	18	72	56	11
2480.009.05000.1	65	80	80	16	9	15	62	-	10
2480.009.07500	80	110	100	20	11	18	85	75	11
2480.009.07500.1	80	100	100	16	9	15	82	-	10

*Execution .1 to Volvo standard

Material:
No 1.2842, hardened

2480.018.

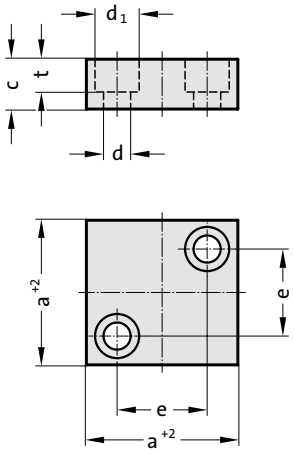

2480.018. Thrust plate

Order No	max. piston rod diameter	a	c	d	d_1	e	t
2480.018.01500	65	90	12	9	15	64	9

Material:
No 1.2842, hardened

Thrust plate
Thrust plate to Renault standard

2480.019. Thrust plate

Order No*	max. piston rod diameter	a	c	d	d_1	e	t
2480.019.00100	15	40	15	9	15	21	10
2480.019.00100.2	15	40	15	7	11	24	7
2480.019.00750	25	56	20	11	18	32	13
2480.019.03000	50	71	20	11	18	48	13
2480.019.03000.2	50	70	15	9	15	50	9
2480.019.03000.1	80	90	20	11	18	67	13
2480.019.07500.2	80	90	15	9	15	70	9
2480.019.07500	95	140	20	11	18	110	13

*Execution .2 to VDI 3003

Material:
No 1.2842, hardened

2480.019.

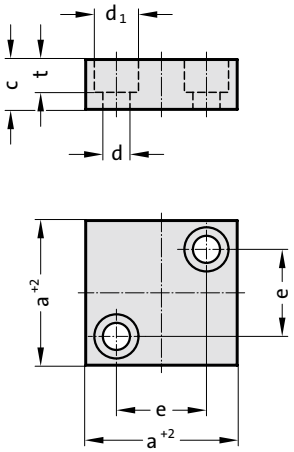

2480.019.45. Thrust plate to Renault standard

Order No	Shape	max. piston rod diameter	a	e	d
2480.019.45.00750	A	50	70	50	11
2480.019.45.01500	A	80	90	70	11
2480.019.45.03000	B	95	105	85	11
2480.019.45.05000	B	95	125	105	11
2480.019.45.07500	B	95	150	125	13
2480.019.45.10000	B	95	190	165	13

Material:
No 1.2842, hardened

2480.019.45.

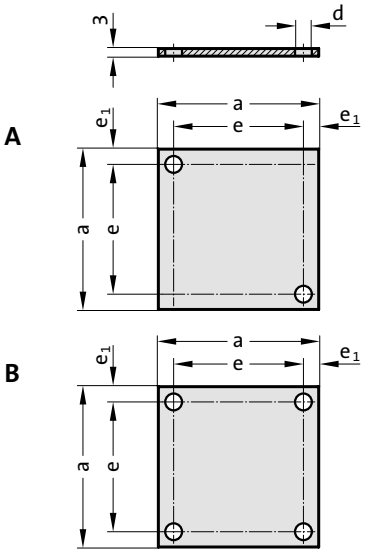

Description:

The hardened thrust pad 2480.004. reduces side forces in cases of skew thrust vaces or lateral displacement component.

In conjunction with the thrust pads, the hardened thrust plates 2480.009., 2480.018. and 2480.019. further helps to protect the gas spring from lateral forces, through reduction of friction – even when used without the thrust pad.

Note:

Especially with gas springs of large stroking capacity we recommend the use of the pad plate combination!

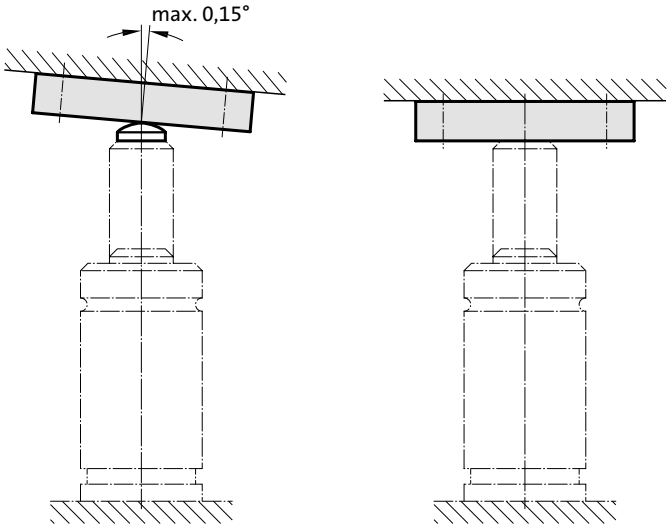

Concertina shrouds



Description:

The concertina shroud protects the piston rod of the gas spring against negative influences, such as e.g.:

- drawing in dirt
- damage to the surface of the piston rod
- adhesion of dirt particles
- drawing in of oil and/or emulsion

The concertina shroud is internally (cylinder tube side) fastened and is free of any obstructing contours, such as externally mounted tube clamps. This enables fastening and installation of the gas spring inside the tool without any restrictions.
The concertina shroud for gas springs prolongs the lifetime of the gas springs under rough operating conditions.

Technical data

Material	Concertina shroud:	CSM-Rubber 65 ±3 Shore A
	Disc:	Steel burnished
	Ring:	stainless Steel
Temperature range:		0-90 °C
Chemical resistance	Acids:	very good
	Alkaline solutions:	very good
	Solvents:	sufficient
Weather resistance	Sun light (UV):	good
	Ozone:	very good
	Water:	sufficient
Oil resistance	Mineral:	good
	Synthetic:	sufficient

Delivery:

Concertina shroud incl. rotatable disk and countersunk screw.

Custom dimensions/materials available on request.

Mounting examples: Concertina shroud

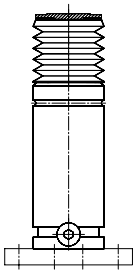

screw mounted at the bottom with 2480.011.

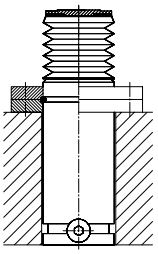

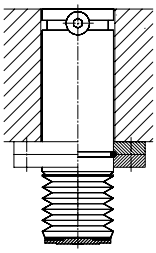

fixed with 2480.055./057./064.

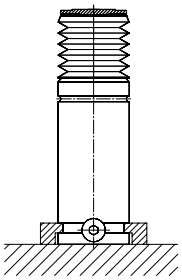

fixed with 2480.007./008.

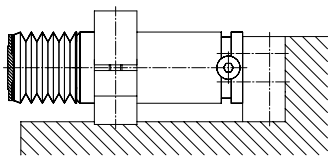

fixed with 2480.044./045./047.

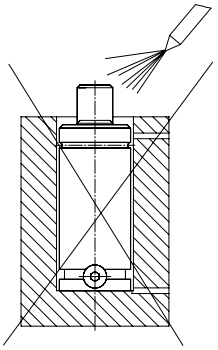

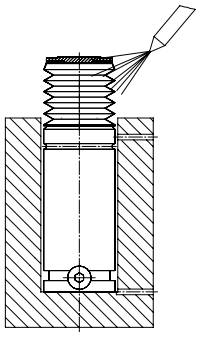

installed loose in the bore



More mounting examples for gas springs see page „Mounting directions for gas springs“

Concertina shroud

2480.080.

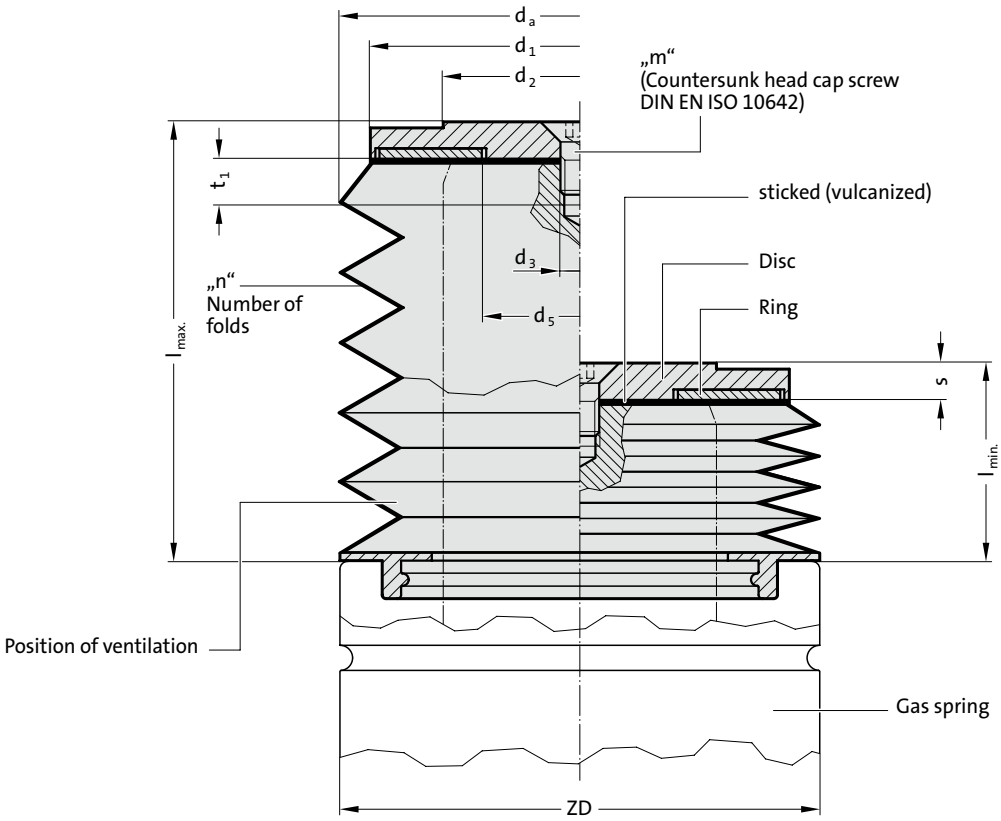

2480.080. Concertina shroud

Type of Gas spring	2487.12.00350.	24 87.12.00500.	2480.12.00500.	2487.12.00750..1	2480.13.00750.	2487.12.01000..1 2488.12.01000.	2487.12.01500. 2488.13.01500.	2480.12.01500.	2487.12.02400. 2488.13.02400.	2480.13.03000.	2487.12.04200. 2488.13.04200.	2480.13.05000.	2487.12.06600. 2488.13.06600.	2480.13.07500.	2487.12.09500. 2488.13.09500.
ZD	32	38	45	45	50	50	63	75	75	95	95	120	120	150	150
d_a	45	50	50	55	55	65	65	75	75	95	95	120	120	150	150
d_1	32	38	45	45	50	50	63	75	75	95	95	120	120	150	150
d_2 / KD	16	20	20	25	25	28	36	36	45	50	60	65	75	80	90
s	6	6	6	6	6	6	6	6	6	6	6	6	6	9	6
d_3	6.6	6.6	6.6	6.6	9	6.6	6.6	9	6.6	9	9	9	9	17	9
d_5	10	14	14	17	17	20	28	28	37	42	51	57	66	71	81
t_1	5	5	10	5	10	5	5	10	5	10	5.5	10	5.5	20	5.5
m	M6×8	M6×8	M6×12	M6×8	M8×12	M6×10	M6×10	M8×12	M6×10	M8×12	M8×12	M8×12	M8×12	M16×25	M8×12
Stroke	125 (Stroke ≤ 125)														
$l_{min.}$	28	28	28	28	28	28	28	28	28	28	28	23	23	24	21
$l_{max.}$	133	133	133	133	134	134	134	134	134	134	134	134	134	137	134
n	10	10	10	10	10	10	10	10	10	8	8	6	6	5	5
Stroke	300 (Stroke > 125), not for 2487.12.*														
$l_{min.}$	–	–	–	–	52	--*/52	--*/52	52	-- */52	54	--*/54	41	--*/41	37	--*/34
$l_{max.}$	–	–	–	–	309	309	309	309	309	309	309	309	309	402	309
n	–	–	–	–	22	--*/22	--*/22	22	--*/22	19	--*/19	14	--*/14	11	--*/11

Ordering Code (example)

Concertina shroud	= 2480.080.	Concertina shroud	= 2480.080.
ZD = 120 mm	= 120.	ZD = 120 mm	= 120.
d_2/KD = 65 mm	= 065.	d_2/KD = 65 mm	= 065.
Stroke = 125 (Stroke ≤ 125 mm)	= 125	Stroke = 300 (Stroke > 125 mm)	= 300
Order No.	= 2480.080.120.065.125	Order No.	= 2480.080.120.065.300

FIBRO

Gas spring connection systems
Introduction

Connecting gas springs in one more systems enables the user to monitor gas spring pressure from outside the tool, to adjust it if necessary, to fill it and to drain it. The connector system has many advantages including ease of maintenance, reliability and improvement in the quality of gas spring use in the tool.

FIBRO offers four different systems for hose connections for gas springs: Minimess system, Compression fitting system, JIC system (24° flare) and Micro connector system. The hoses, screwed connectors and other components are selected to meet the most stringent standards and undergo a series of tests including service life, static seel and robustness after repeated assembly and disassembly.

Minimess system 2480.00.23./.24.

+ Small external hose diameter Ø 5 mm
+ Small bending radius R_{min} = 20
+ High pressure resistance
+ Vibration-proof measurement couplings
+ Connector with valve
+ No tools needed for connecting hose to adapter, and disconnecting
± Swaged non-detachable hose fitting
– Not for use with a pressure reservoir

Technical data:

Hose:	polyamide 11, black, dimpled
Hose fitting:	free cutting steel, galvanised
Measurement couplings:	free cutting steel, galvanised
Adapter:	steel, gunmetal finish
Max. pressure:	630 bar
Temperature range:	0–100 °C

Recommended application:

Most used system for all gas springs with G1/8 gas connection.
Not suitable for use with a pressure reservoir because of the small internal diameter which reduces the flow.

Compression fitting system 2480.00.10.

+ Assemble on-site system
+ Reusable hose fitting
+ High pressure resistance
± Suitable for connecting to a pressure reservoir under certain conditions
– Larger bending radius R_{min} = 40
– Not suitable for gas springs with M6 connection thread
– Extra time required for preparing hose and fitting it

Technical data:

Hose:	polyurethane/polyamide, black, dimpled
Hose fittting:	steel, galvanised
Adapter:	steel, galvanised
Max. pressure:	380 bar
Temperatur range:	0–100 °C

Recommended application:

For all gas springs with G1/8 gas connection.
Mainly used for self-assembly in small numbers.

24°-cone-system 2480.00.25./.26.

+ Suitable for connecting to a pressure reservoir
+ Wide range of connection adapters
+ Vibration-proof (O-ring seal)
+ High pressure resistance
± Swaged non-detachable hose fitting
– Larger bending radius R_{min} = 40
–Not suitable for gas springs with M6 connection thread

Technical data:

Hose:	polyurethane/polyamide, black, dimpled
Hose fitting:	steel, galvanised
Adapter:	steel, galvanised
Max. pressure:	315 bar
Temperatur range:	0–100 °C

Recommended application:

For all gas springs with G1/8 gas connection.
Mainly used for connection to pressure reservoir.

Connector system, 24° conus micro 2480.00.27./.28.

+ small external hose diameter ø5 mm
+ hose: small bending radius R_{min} = 20 mm
+ pipe: Min. bending radius = 12 mm (3x da)
+ high pressure resistance
+ small connection adapter
+ vibration-safe due to O-ring seal
+ tightly pressed, non-detachable hose fitting
- not suitable for use with a pressure reservoir
- limited suitability for gas springs with thread connection G1/8

Technical data:

Hose:	Polyamide 11, black, dimpled
Hose adapter:	free cutting steel, galvanised
Adapter:	steel, galvanised
Max. perm. pressure:	475 bar
Temperature range:	0 to +80 °C
Pipe:	steel
Pipe external diameter (da):	ø4 mm
Pipe internal diameter (di):	ø2 mm
max. dynamic pressure:	430 bar
Temperature range:	0 to +100 °C

Note: Pipe system, 24° conus micro for higher temps on request.

Recommended application:

For all gas springs with M6 gas connection.
Not suitable for use with a pressure reservoir due to small internal diameter (reduced flow volume).

subject to alterations

Instruction for hose assembly
Mounting arrangement
for gas springs in the Minimess system

FIBRO

Never exceed the maximum pressures and temperatures for the hoses.

Ensure that all hoses and adaptors are perfectly clean prior to assembly.

To be suitable for use with compressed gas the hose sheath must be perforated. We recommend the use of the 24°-cone-hose system for pressure reservoir to ensure an unrestricted gas flow.

Follow the instructions below to ensure functionality and maximum service life for the hose connection:

1 Select a hose length to provide a certain amount of play.

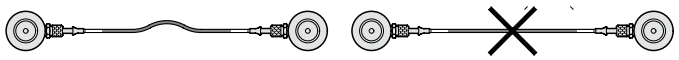

2 The longitudinal marking on the hose must not be twisted during assembly.

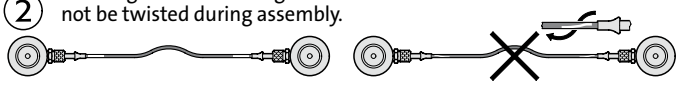

3 Use only hose fittings which prevent kinks forming in the hose.

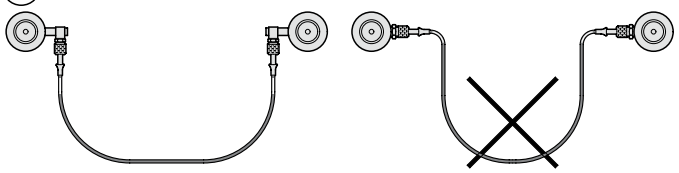

4 Any bends in the hose must always have the recommended minimum radius, as detailed in the catalogue.

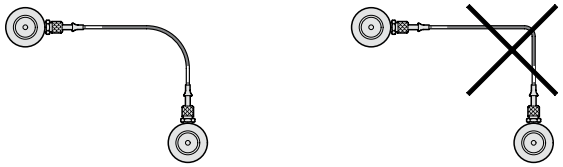

5 The hose must be connected correctly to avoid mechanical damage.



Refer to DIN 20066 for further details on installing hose connections.

Warning:

Any modifications whatsoever to the product are prohibited.

For further information refer to the FIBRO Gas Spring Catalogue, visit www.fibro.com or contact your FIBRO agent.

2480. Example 1:

Direct connection for group

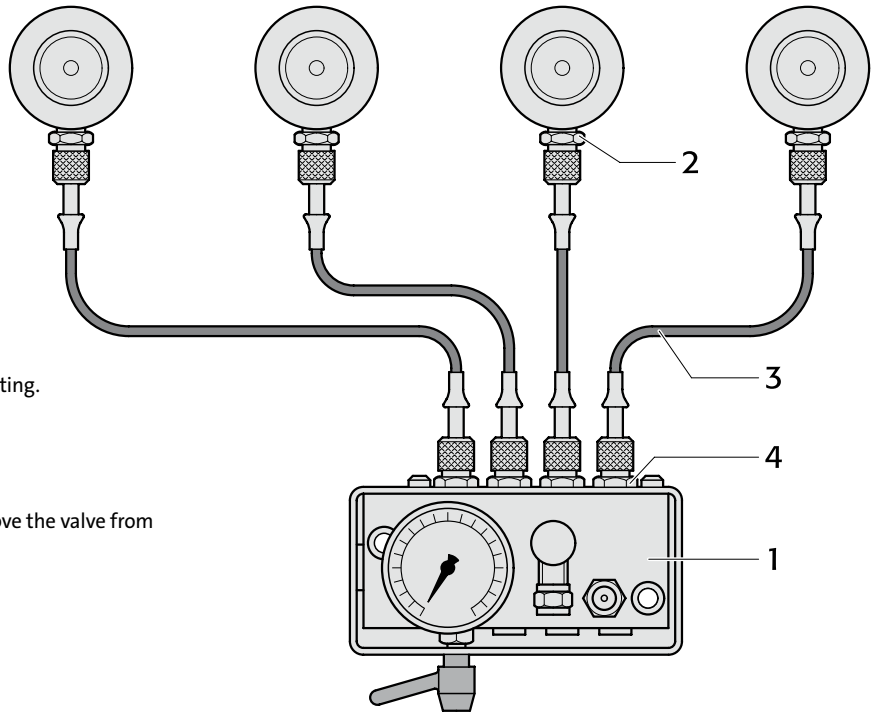

Function:

Each spring has a direct connection with the control fitting.
They are not interconnected and form a pressure zone

See control fitting 2480.00.30

Note:

When installing gas springs in the system always remove the valve from the gas spring.

Item	Designation	Number	Order No.	Comment
1	Control fitting	1	2480.00.30.01	Optionally with diaphragm pressure switch 2480.00.30.02
2	Gauging coupling	4	2480.00.24.01	
3	Measuring hose	4	2480.00.23.□□.□□□	Type of connection and length as required
4	Gauging coupling	4	2480.00.24.02	

FIBRO

Mounting arrangement for gas springs in the Minimess system

2480. Example 2:

Group series connection

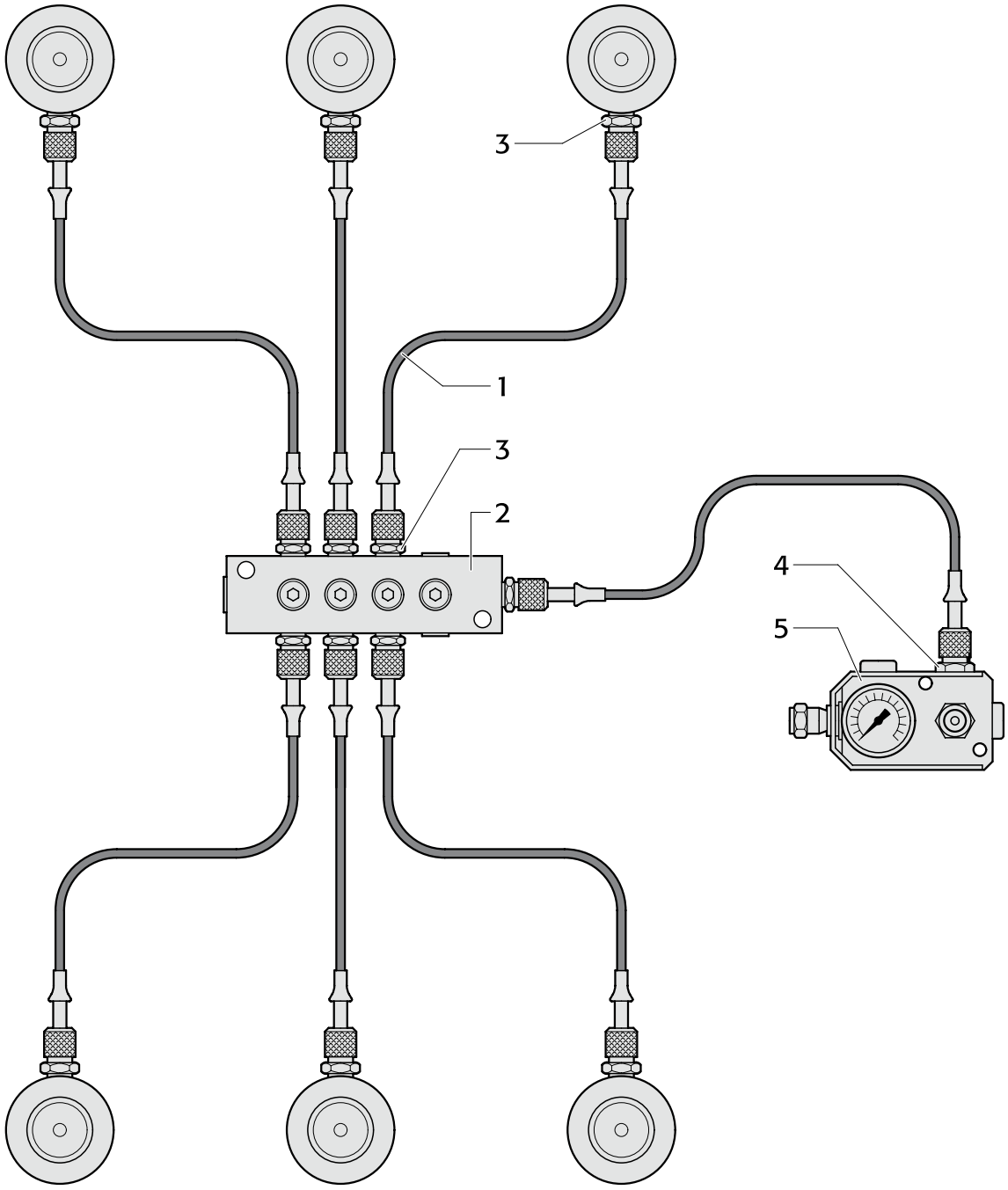

Function:

The springs are interconnected and there is just one test line to the control fitting.

Note:

When installing gas springs in the system always remove the valve from the gas spring.

Position	Designation	Number	Order No.	Comment
1	Measuring hose	7	2480.00.23.□□.□□□	Type of connection and length as required
2	Distributor	1	2480.00.24.33	
3	Gauging coupling	13	2480.00.24.01	
4	Gauging coupling	1	2480.00.24.02	
5	Control fitting	1	2480.00.31.01	

Mounting arrangement for gas springs in the Minimess system

2480. Example 3:

Multiple connections with independent functioning

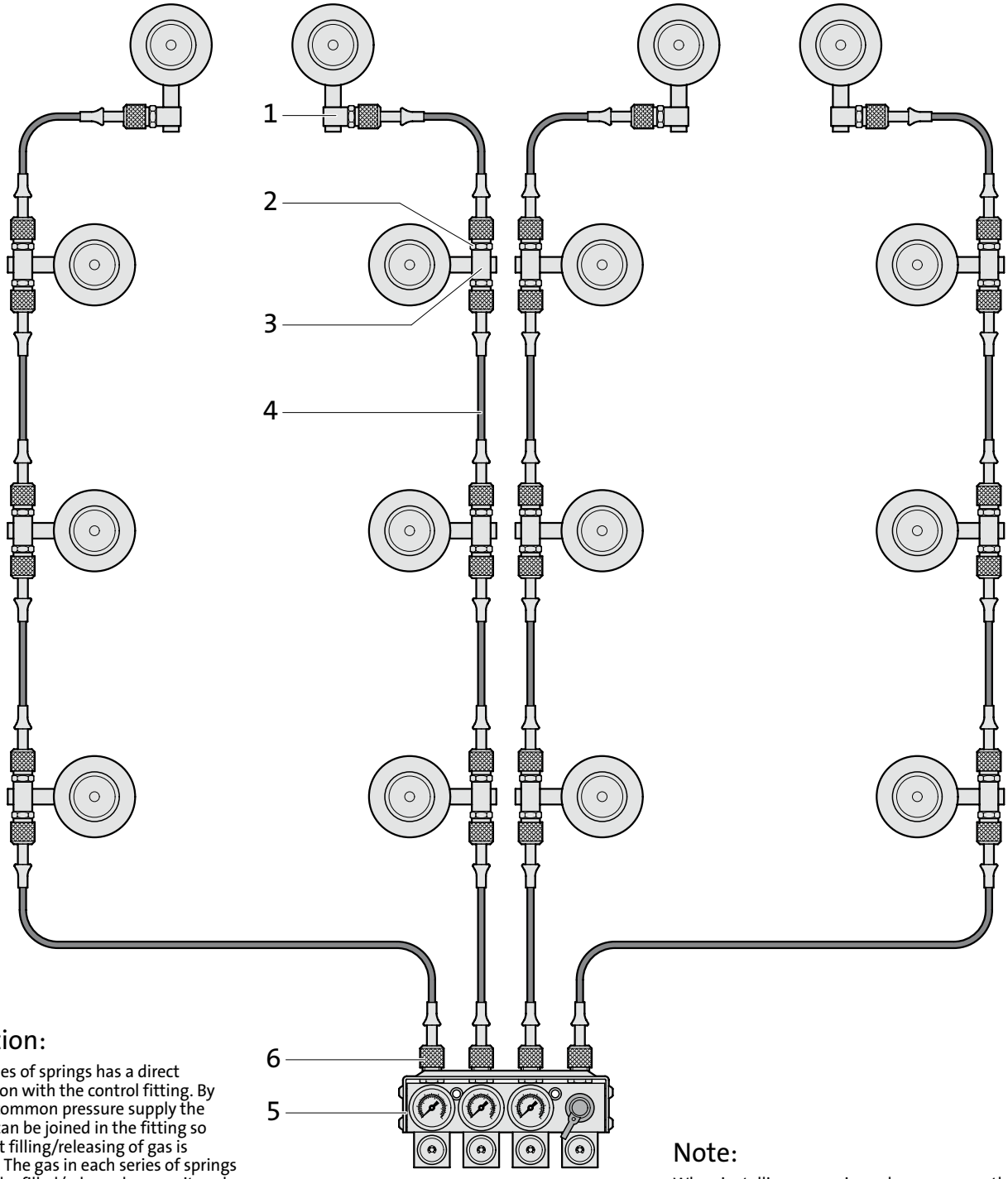

Function:

Each series of springs has a direct connection with the control fitting. By using a common pressure supply the springs can be joined in the fitting so that joint filling/releasing of gas is possible. The gas in each series of springs can also be filled/released or monitored individually .

See Multi control fitting 2480.00.39.05.04

Note:

When installing gas springs always remove the valve from the gas spring.

Item	Designation	Number	Order No.	Comment
1	Simple adaptor, short	4	2480.00.24.17	Choice of "long" or "very long" depending on the specific mounting arrangements.
2	Gauging coupling	28	2480.00.24.01	
3	Multi adapter	12	2480.00.24.11	Choice of "long" or "very long" depending on the specific mounting arrangements.
4	Measuring hose	16	2480.00.23.□□.□□□	Type of connection and length as required
5	Multi control fitting	1	2480.00.39.05.04	
6	Gauging coupling	4	2480.00.24.02	

Mounting arrangement for gas springs in the Minimess system

2480. Example 4.1:

Group series connection

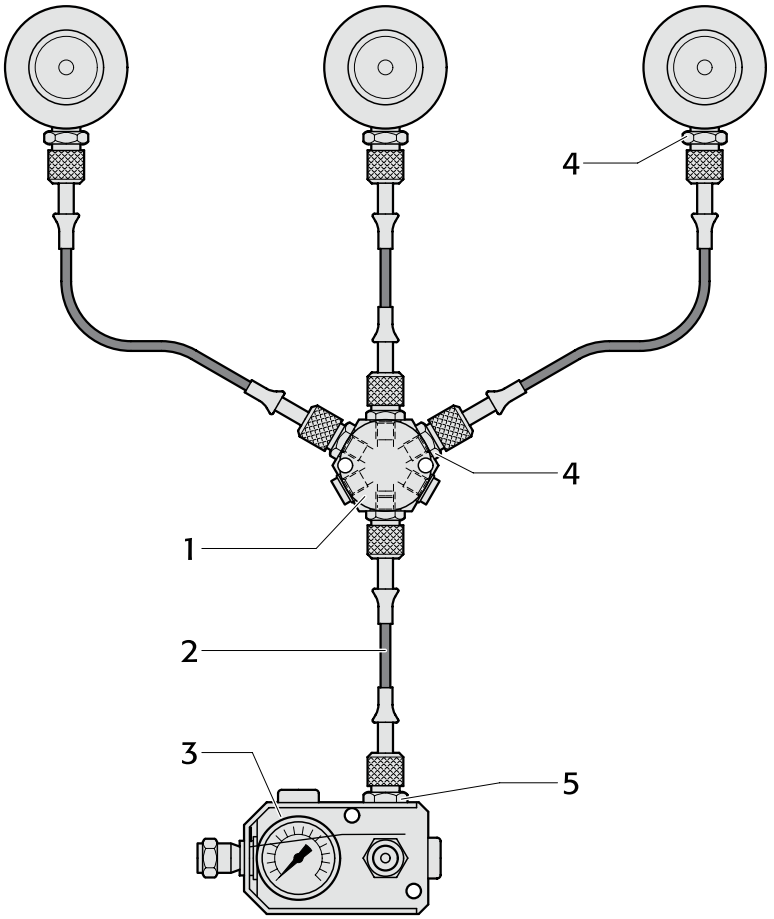

Function:

The springs are interconnected and there is just one test line to the control fitting.

Note:

When installing gas springs always remove the valve from the gas spring.

Item	Designation	Number	Order No.	Comment
1	Coupling	1	2480.00.24.31	
2	Measuring hose	4	2480.00.23.□□.□□□	Type of connection and length as required
3	Control fitting	1	2480.00.31.01	
4	Gauging coupling	7	2480.00.24.01	
5	Gauging coupling	1	2480.00.24.02	

2480. Example 4.2:

Group series connection

Function:

The springs are interconnected and there is just one test line to the control fitting.

Note:

When installing gas springs always remove the valve from the gas spring.

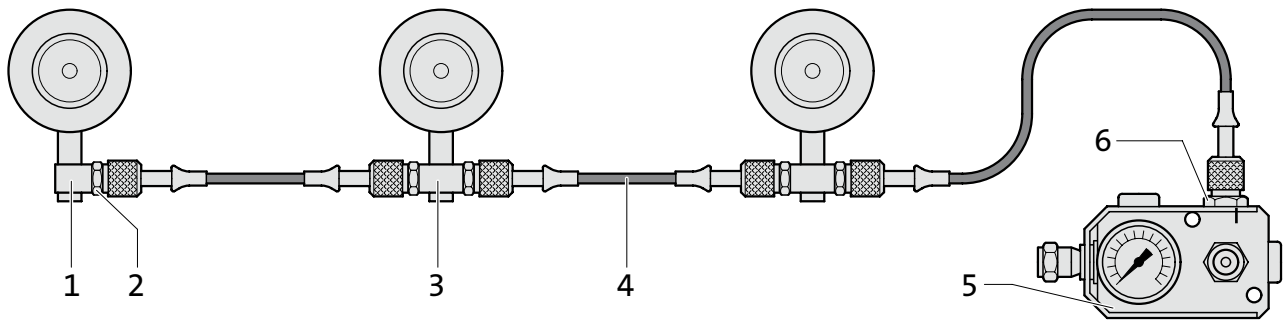

Item	Designation	Number	Order No	Comment
1	Simple adaptor, short	1	2480.00.24.17	Choice of "long" or "very long" depending on the specific mounting arrangements.
2	Gauging coupling	5	2480.00.24.01	
3	Multi adapter	2	2480.00.24.11	Choice of "long" or "very long" depending on the specific mounting arrangements.
4	Measuring hose	3	2480.00.23.□□.□□□	Type of connection and length as required
5	Control fitting	1	2480.00.31.01	
6	Gauging coupling	1	2480.00.24.02	

Mounting arrangement for gas springs in the Minimess system

2480. Example 5:

Independent test connection

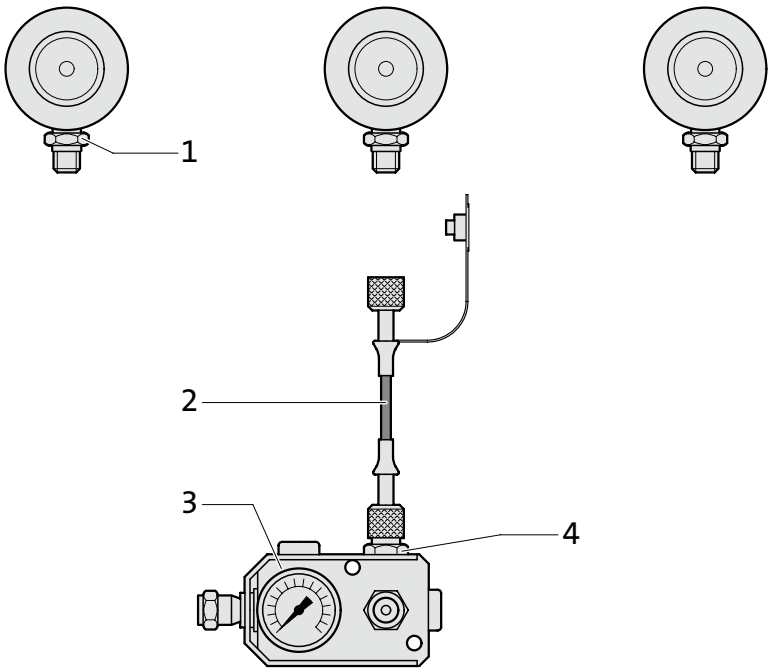

Function:

The springs work independently and have a gauging coupling (2480.00.24.01) with valve.

If required the springs can be tested and pressure adjusted individually. A control fitting (2480.00.31.01) is used for the purpose.

Item	Designation	Number	Order No	Comment
1	Gauging coupling	3	2480.00.24.01	
2	Measuring hose	1	2480.00.23.□□.□□□	Type of connection and length as required
3	Control fitting	1	2480.00.31.01	
4	Gauging coupling	1	2480.00.24.02	

Gas spring accessories
Minimess – Compound threaded joints

2480.00.23.01.

Gauging hose -
both ends straight

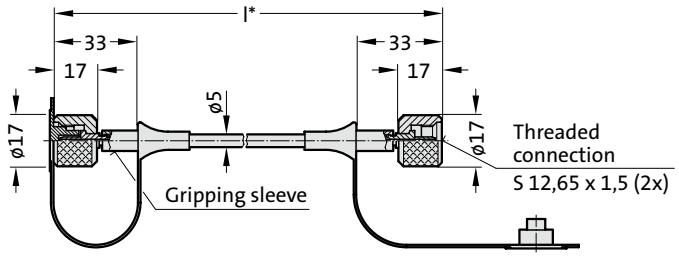

2480.00.23.01.----.1

Antikink spiral, at one end

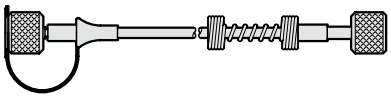

2480.00.23.01.----.2

Antikink spiral, at both ends

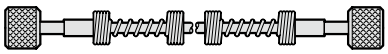

2480.00.23.01.

Order No	l*
2480.00.23.01.0200	200
2480.00.23.01.0300	300
2480.00.23.01.0400	400
2480.00.23.01.0500	500
2480.00.23.01.0630	630
2480.00.23.01.0800	800
2480.00.23.01.1000	1000
2480.00.23.01.1200	1200
2480.00.23.01.1500	1500
2480.00.23.01.2000	2000
2480.00.23.01.2500	2500
2480.00.23.01.3000	3000

* other lengths available in 5 mm steps,
shortest factory lengths:

without antikink protection:	90 mm
antikink protection at one end:	150 mm
antikink protection at both ends:	300 mm

2480.00.23.02.

Gauging hose -
one end straight
90°-angle

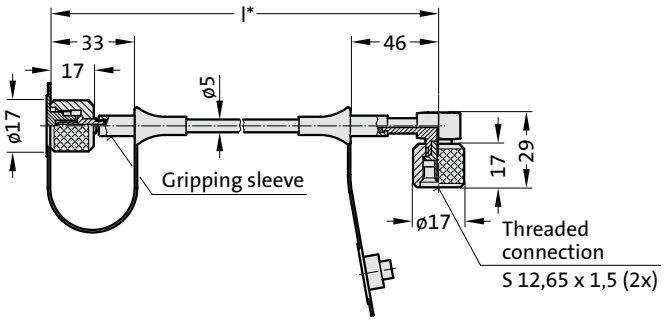

2480.00.23.02.----.1

Antikink spiral, at one end, straight

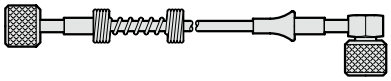

2480.00.23.02.----.2

Antikink spiral, at both ends

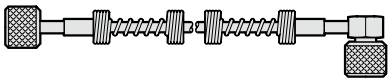

2480.00.23.02.----.3

Antikink spiral, at one end, 90°

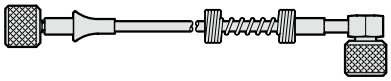

2480.00.23.02.

Order No	l*
2480.00.23.02.0200	200
2480.00.23.02.0300	300
2480.00.23.02.0400	400
2480.00.23.02.0500	500
2480.00.23.02.0630	630
2480.00.23.02.0800	800
2480.00.23.02.1000	1000
2480.00.23.02.1200	1200
2480.00.23.02.1500	1500
2480.00.23.02.2000	2000
2480.00.23.02.2500	2500
2480.00.23.02.3000	3000

* other lengths available in 5 mm steps,
shortest factory lengths:

without antikink protection:	90 mm
antikink protection at one end:	150 mm
antikink protection at both ends:	300 mm

2480.00.23.03.

Gauging hose -
both ends
90°-angle

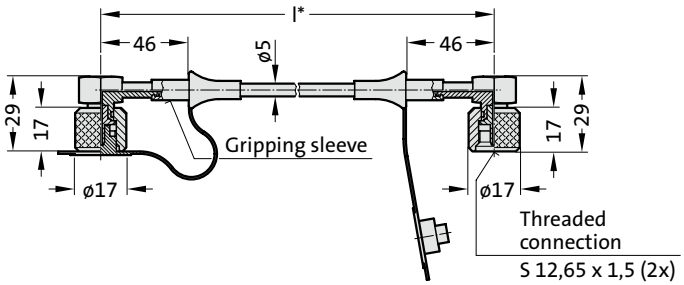

2480.00.23.03.----.3

Antikink spiral, at one end

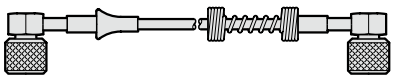

2480.00.23.03.----.2

Antikink spiral, at both ends

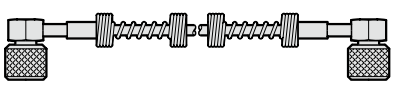

2480.00.23.03.

Order No	l*
2480.00.23.03.0200	200
2480.00.23.03.0300	300
2480.00.23.03.0400	400
2480.00.23.03.0500	500
2480.00.23.03.0630	630
2480.00.23.03.0800	800
2480.00.23.03.1000	1000
2480.00.23.03.1200	1200
2480.00.23.03.1500	1500
2480.00.23.03.2000	2000
2480.00.23.03.2500	2500
2480.00.23.03.3000	3000

* other lengths available in 5 mm steps,
shortest factory lengths:

without antikink protection:	105 mm
antikink protection at one end:	150 mm
antikink protection at both ends:	300 mm

subject to alterations

Gas spring accessories
Minimess – Compound threaded joints

Gauging coupling
2480.00.24.01 with valve
2480.00.24.03 without valve
for connection to gas spring

Gauging coupling
2480.00.24.02 with valve
2480.00.24.04 without valve
for connection to control fitting

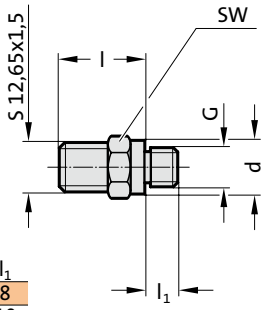

Order No	G	d	SW*	l	l_1
2480.00.24.01	G 1/8	14	14	22	8
2480.00.24.02	G 1/4	19	19	21	10
2480.00.24.03	G 1/8	14	14	22	8
2480.00.24.04	G 1/4	19	19	21	10

*SW = A/F - width across flats

Note:

The gauging coupling with valve is used in standard permanent connections. The valveless gauging coupling is used in systems where changes to the filling pressure are necessary on a regular basis (e.g. die cushions).

2480.00.24.16 long

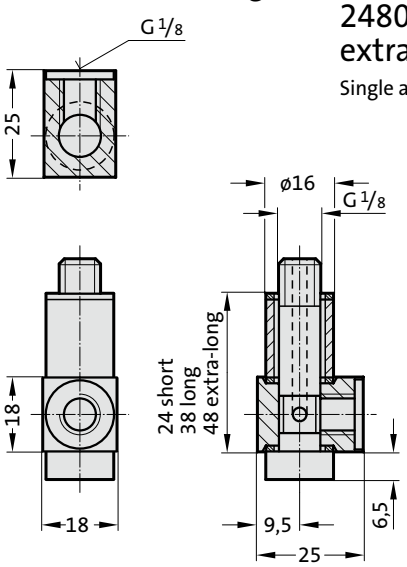

2480.00.24.17 short
2480.00.24.18 extra-long

Single adapter

2480.00.24.13 long

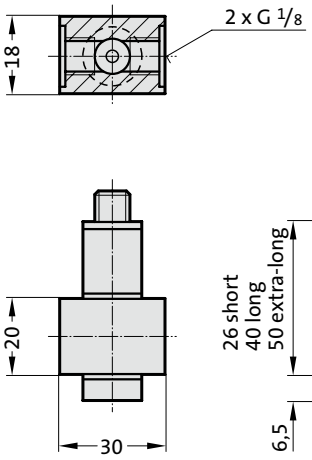

2480.00.24.14 short
2480.00.24.15 extra-long

Dual adapter

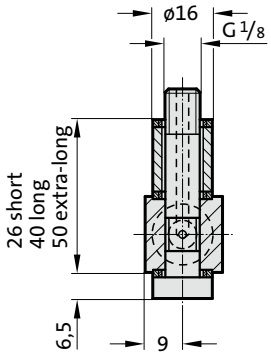

2480.00.24.10 long

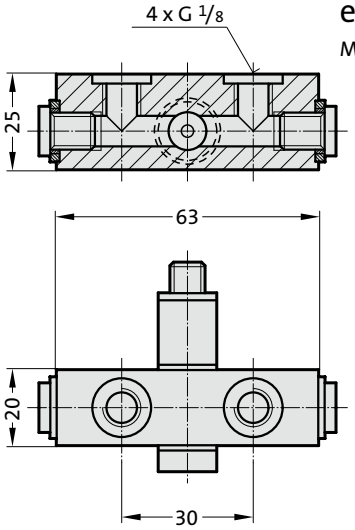

2480.00.24.11 short
2480.00.24.12 extra-long

Multiple adapter

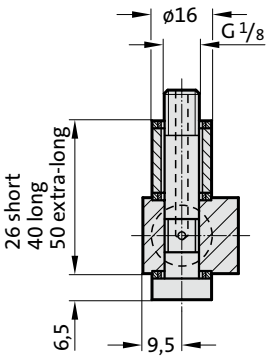

2480.00.23.12.01

Hose clamp for gauging hose DN2 (Ø5 mm)

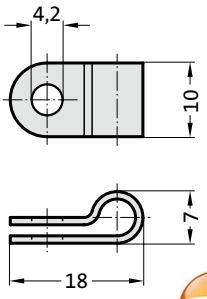

Material: Polyamide

Note:
Supplied without screws

2192.50.04.012

self-tapping screw
A M4x12 DIN 7516

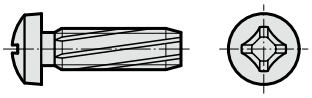

Note: self-tapping

Diameter of hole for self-tapping screw = 3,6 mm

2480.00.23.13.

Anti-scuff spiral
for subsequent installation over hoses and tubing



Order No	l in mm
2480.00.23.13.0001	1000
2480.00.23.13.0002	2000
2480.00.23.13.0005	5000
2480.00.23.13.0010	10000

Material:
Polyamide

Description:

The anti-scuff spiral is used to protect against abrasion, is resistant to air, water, oil, hydraulic fluids petrol and other liquids.

Inner-Ø	7 mm
For hose/tubing outer-Ø	max. 5-11 mm
Temperature range	-30 °C to +100 °C

Gas spring accessories
Minimess - Compound threaded joints

2480.00.24.53 horizontal, long
2480.00.24.54 horizontal, short

Double adapter

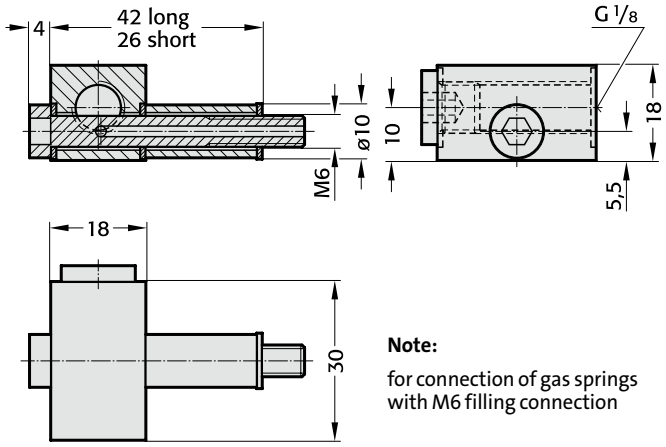

Note:

for connection of gas springs with M6 filling connection

2480.00.24.56 vertical, long
2480.00.24.57 vertical, short

Double adapter

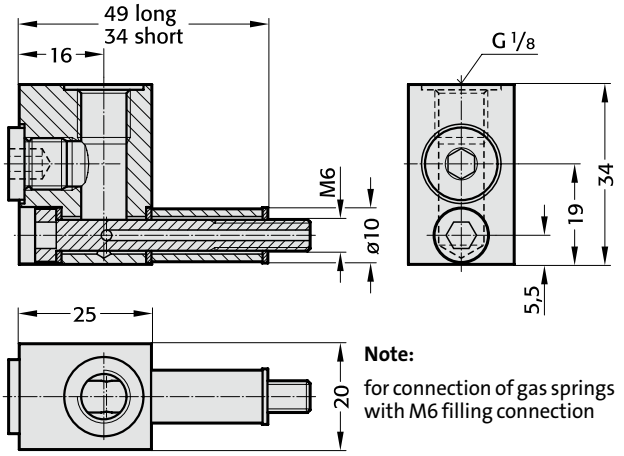

Note:

for connection of gas springs with M6 filling connection

2480.00.24.43

Connection adaptor M6 - G 1/8

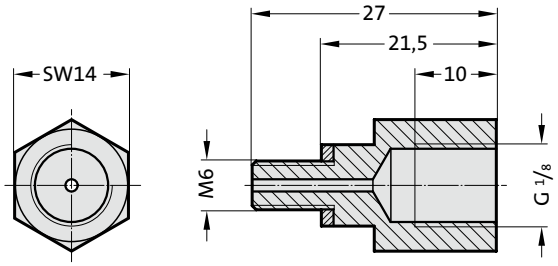

Mounting example:

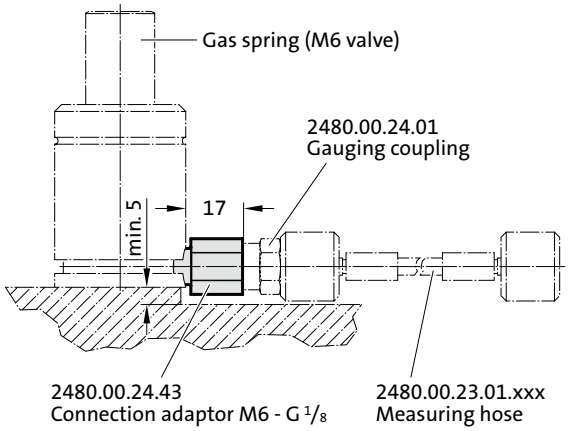

Gas spring accessories
Minimess – Compound threaded joints

2480.00.24.30
Distributor block G 1/8
3 ports

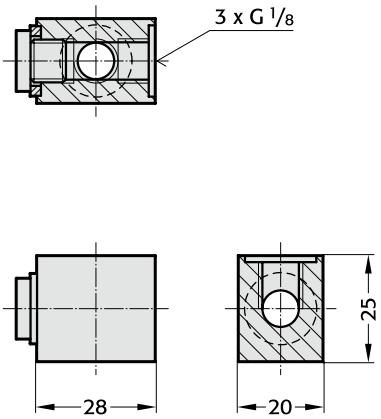

2480.00.24.34
Distributor block G 1/8
4 ports

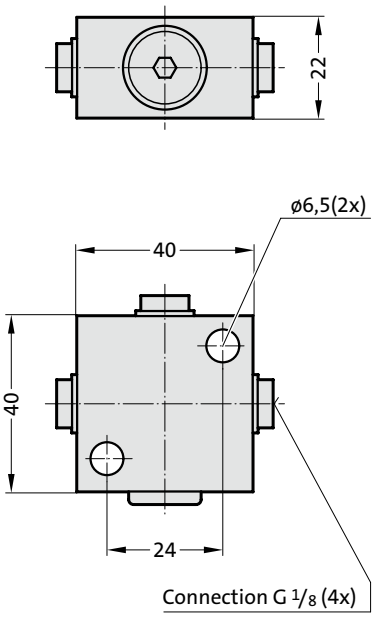

2480.00.24.31
Distributor block G 1/8
6 ports

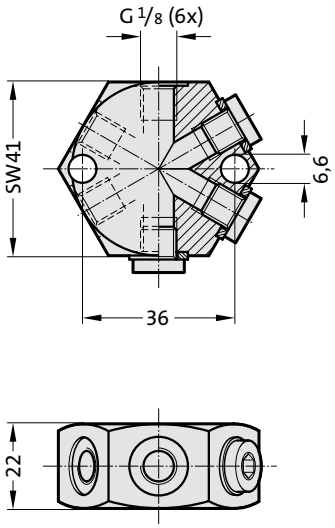

2480.00.24.33
Distributor G 1/8
14 ports

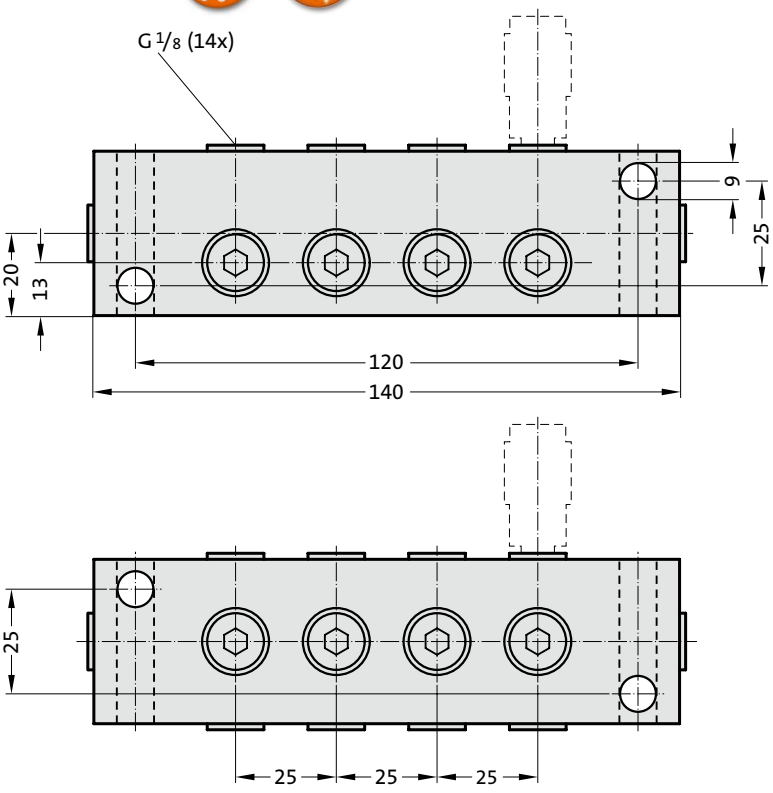

2480.00.40
Charging adapter

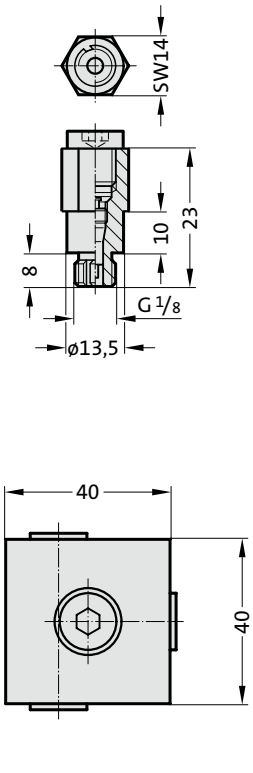

Gas spring accessories
Minimess – Compound threaded joints

2480.00.24.01
Gauging coupling with valve

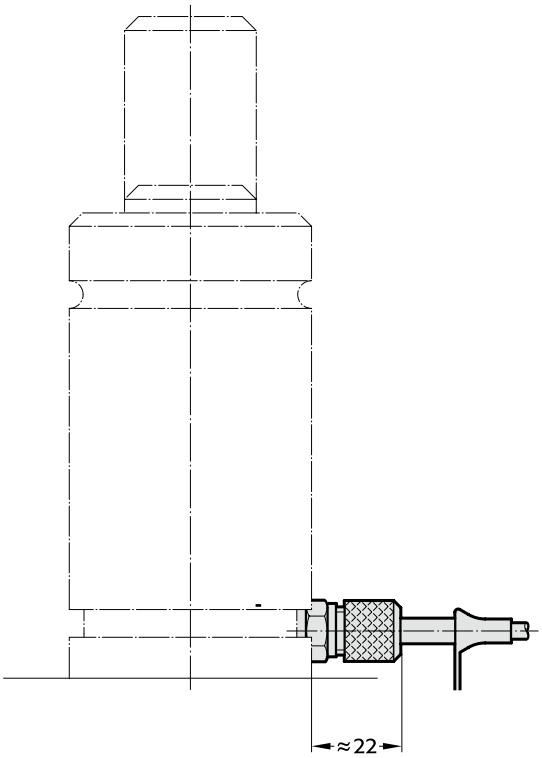

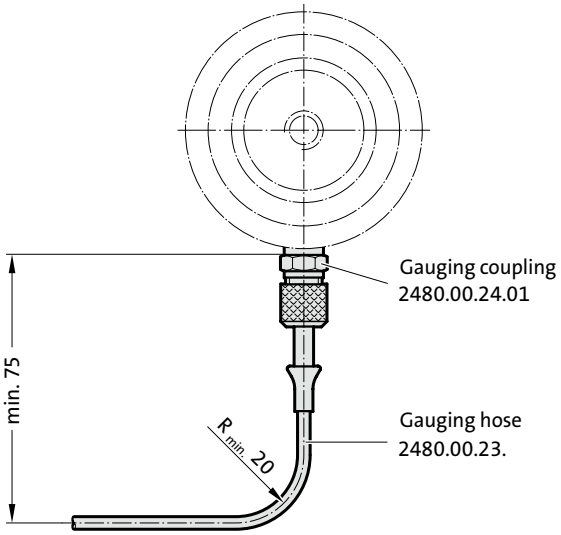

2480.00.24.10 long
11 short
12 extra-long
Multiple adapter with two gauging couplings

Note:
When installing or fitting a gauging coupling the valve must be removed from the gas spring.

connected horizontally

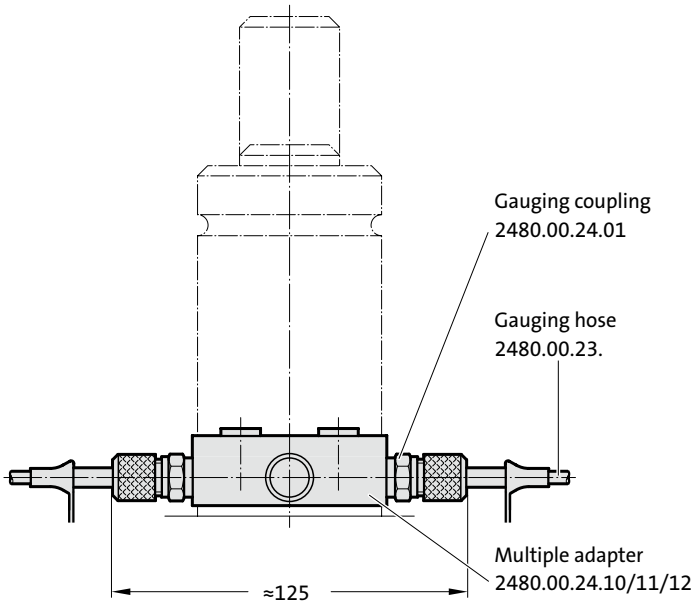

connected vertically

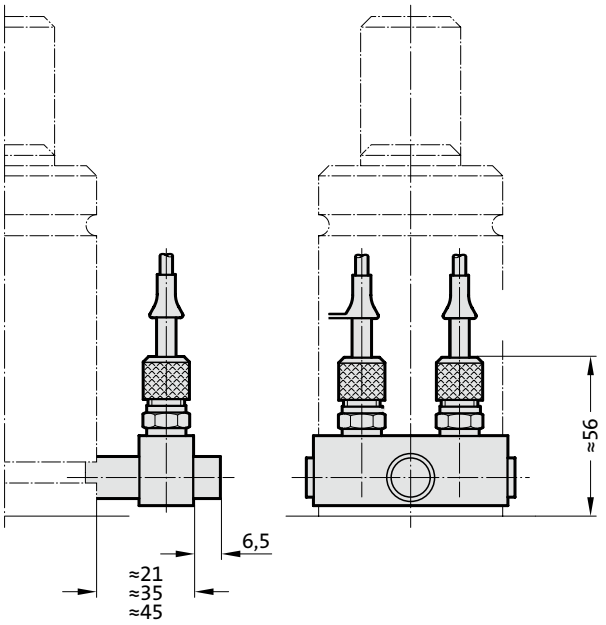

subject to alterations

Gas spring accessories
Compression fitting – Compound threaded joints

2480.00.10.01

Direct connector to gas spring

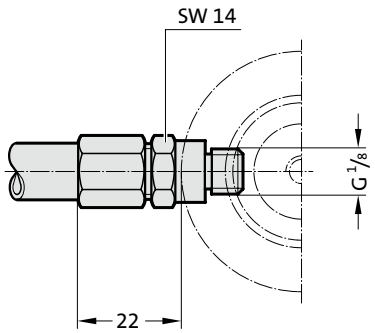

2480.00.10.03

Direct connector to control fitting

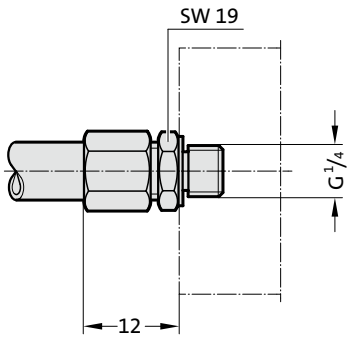

2480.00.10.10

angle connector, adjustable

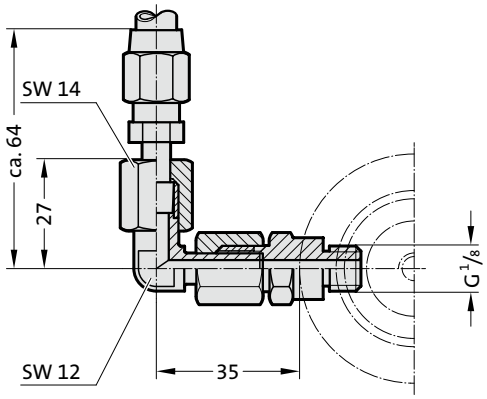

2480.00.10.11

T-connector, adjustable

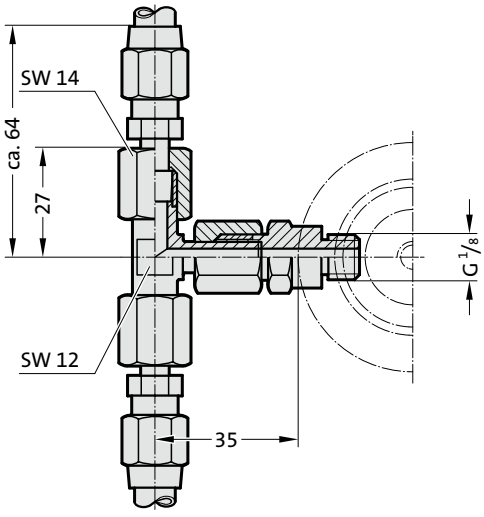

2480.00.10.12

L-connector, adjustable

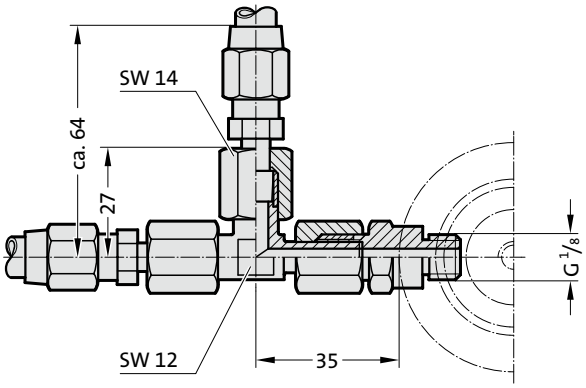

Gas springs accessoires
Compression fitting – Compound threaded joints

2480.00.10.20.12.01

Hose clamp for gauging hose DN4 (Ø 9 mm)

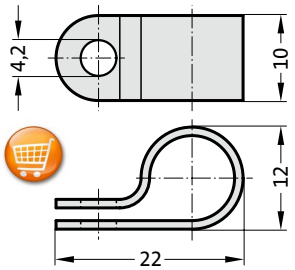

Material: Polyamide
Note:
Supplied without screws

2192.50.04.012

self-tapping screw
A M4x12 DIN 7516

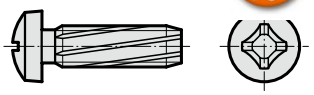

Note: self-tapping
Diameter of hole for self-tapping screw = 3.6 mm

2480.00.23.13.

Anti-scuff spiral
for subsequent installation over hoses and tubing



Order No	l in mm
2480.00.23.13.0001	1000
2480.00.23.13.0002	2000
2480.00.23.13.0005	5000
2480.00.23.13.0010	10000

Inner-Ø	7 mm
For hose/tubing outer-Ø	max. 5-11 mm
Temperature range	-30 °C to +100 °C

Material:
Polyamide

Description:
The anti-scuff spiral is used to protect against abrasion, is resistant to air, water, oil, hydraulic fluids petrol and other liquids.

2480.00.54.01

Expansion punch for hosing

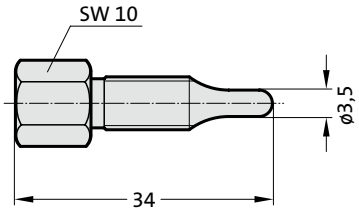

2480.00.10.20.

High-pressure hose

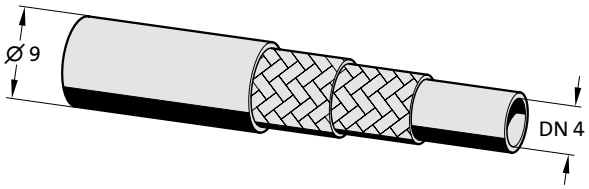

Ordering Code (example):

High pressure hose	=	2480.00.10.20.
length 10 m	=	0010
Order No	=	2480.00.10.20.0010

2480.00.54.02

Vice jaws for holding high-pres

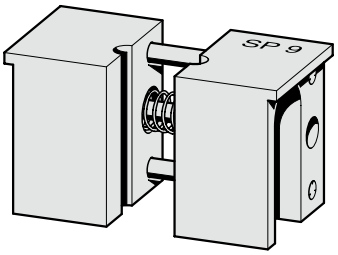

2480.00.10.21

Hose screw fitting (female)

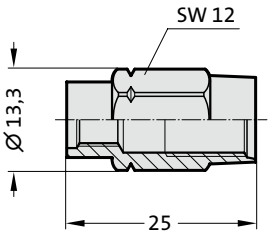

2480.00.54.03

Hose shears

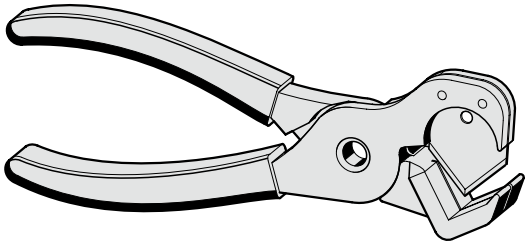

2480.00.10.22

Hose screw fitting (male)

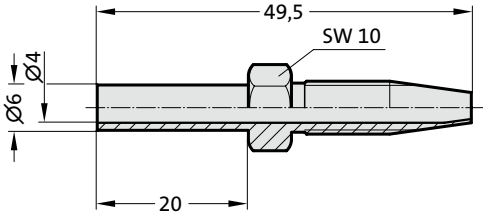

subject to alterations

Assembly arrangenment of gas springs in servial connection compression fitting

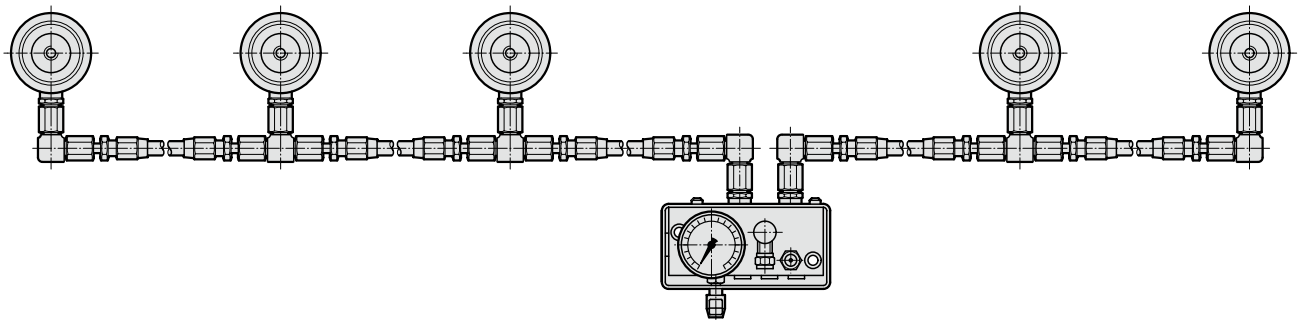

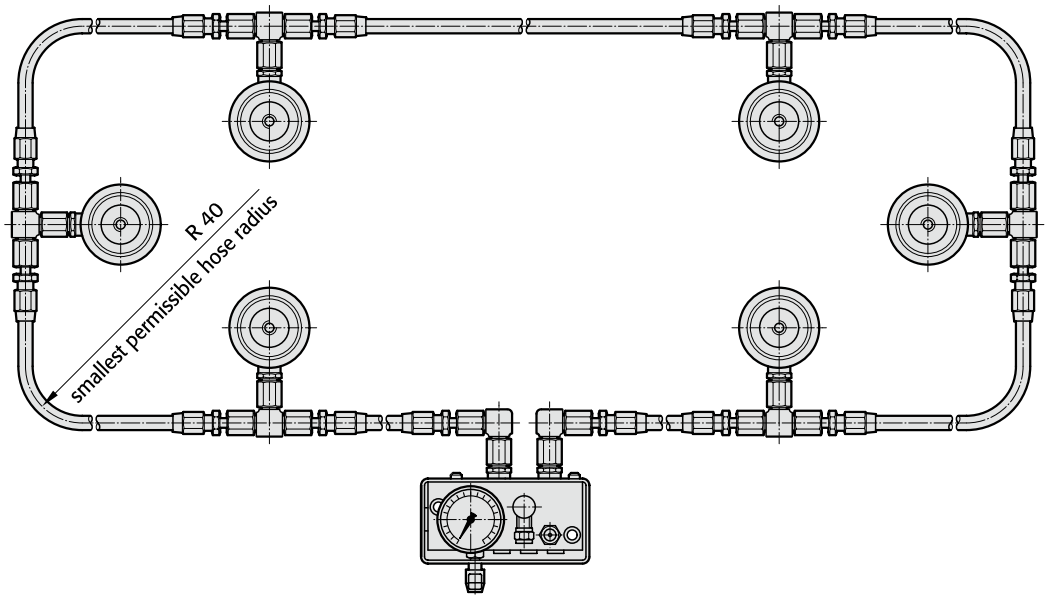

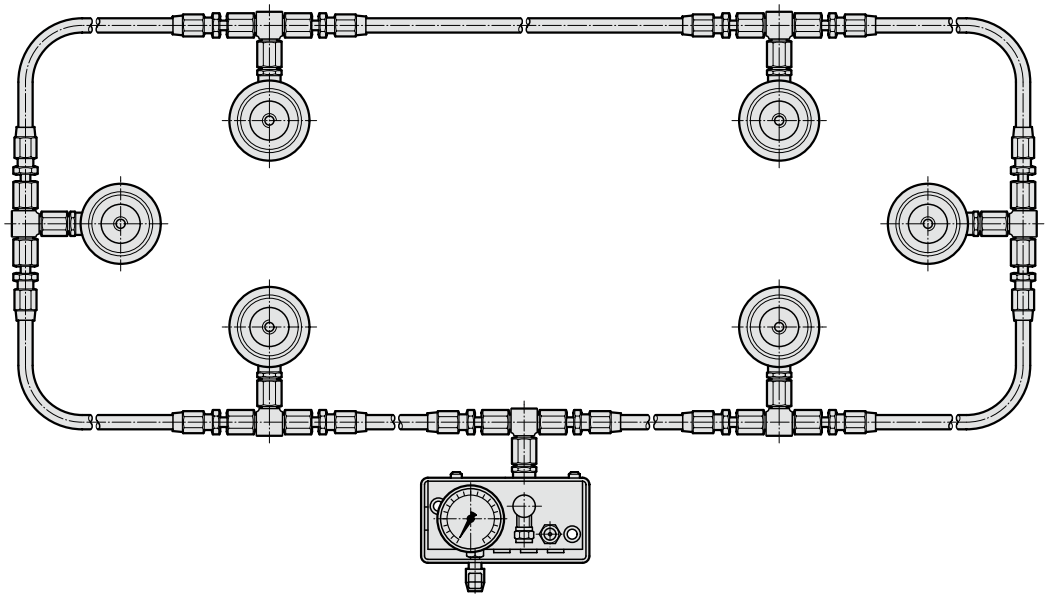

Note: When installing gas springs always remove the valve from the gas spring.

Gas spring accessories
24°-cone-threaded Joints
(DIN 2353 / DIN EN ISO 8434-1)

2480.00.26.03
Threaded Joint G1/8

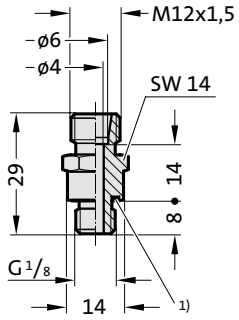

1) Eolastic-Seal ED

2480.00.26.04
Threaded Joint G1/4

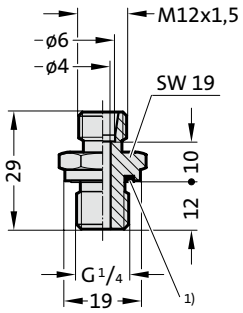

1) Eolastic-Seal ED

2480.00.26.21
Adjustable threaded joint
45°, complete

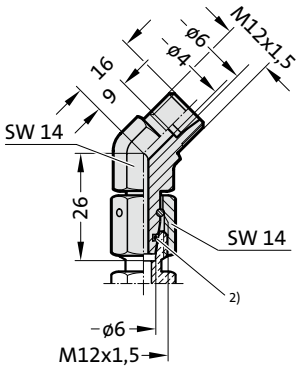

2) O-ring

2480.00.26.22
Adjustable threaded joint
90°, complete

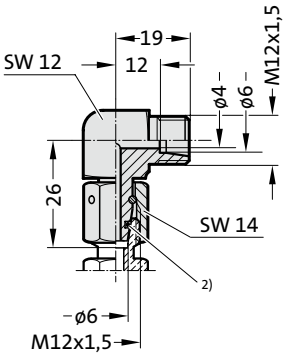

2) O-ring

2480.00.26.23
Adjustable L-Coupling,
complete

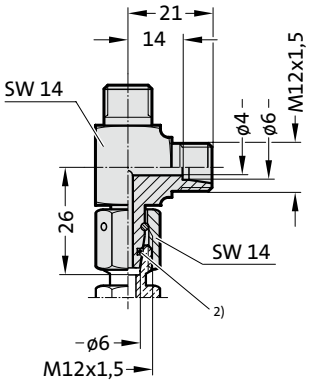

2) O-ring

2480.00.26.24
Adjustable T-Coupling,
complete

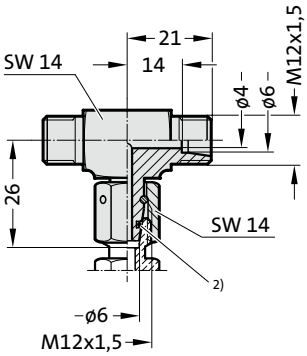

2) O-ring

2480.00.26.25
Adapter straight,
hose to hose

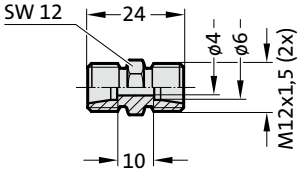

2480.00.26.26
Adapter, 90°,
hose to hose

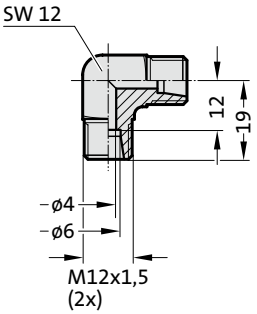

2480.00.26.27
Adapter, T,
hose to hose

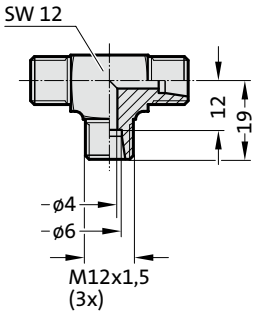

2480.00.26.28
Adapter, K,
hose to hose

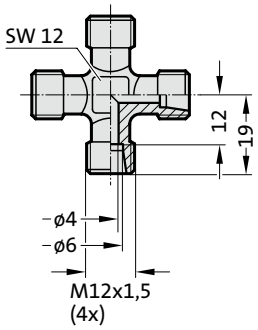

subject to alterations

Gas springs accessories
Connecting hoses with 24° cone
(DIN 2353 / DIN EN ISO 8434-1)

2480.00.25.01.

Hose - conical seals with union nuts and O-ring (straight/straight)

* Shortest factory lengths: 140 mm
minimum bending radius R40

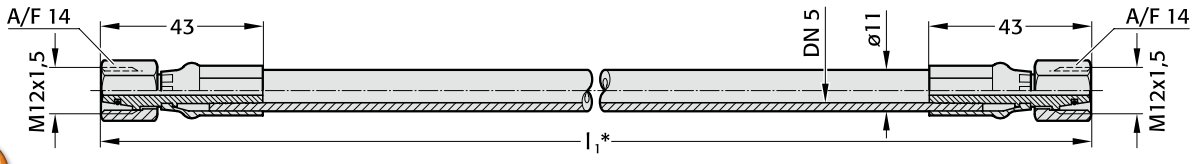

Dimension l_1 specified in the order, e.g. 765 mm, gives order no 2480.00.25.01.0765

2480.00.25.02.

Hose - conical seals with union nuts and O-ring (90° bend/straight)

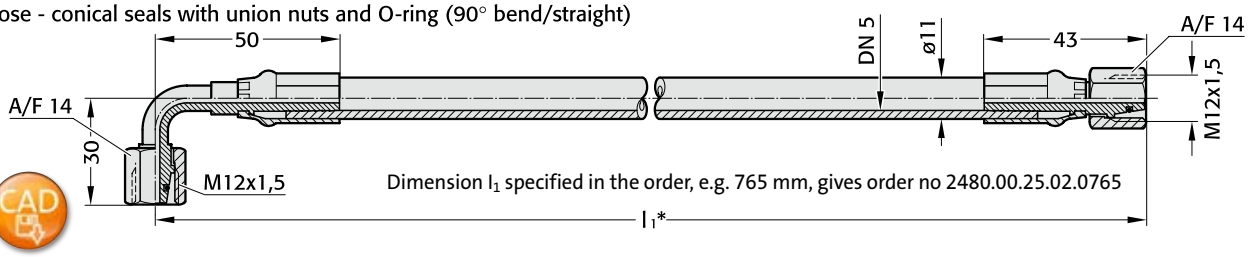

Dimension l_1 specified in the order, e.g. 765 mm, gives order no 2480.00.25.02.0765

2480.00.25.03.

Hose - conical seals with union nuts and O-ring (90° bend/both ends)

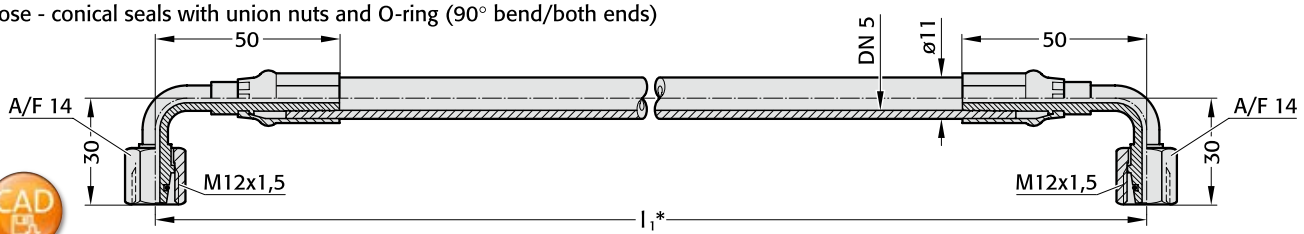

Dimension l_1 specified in the order, e.g. 765 mm, gives order no 2480.00.25.03.0765

2480.00.25.04.

Hose - conical seals with union nuts and O-ring (45° bend/straight)

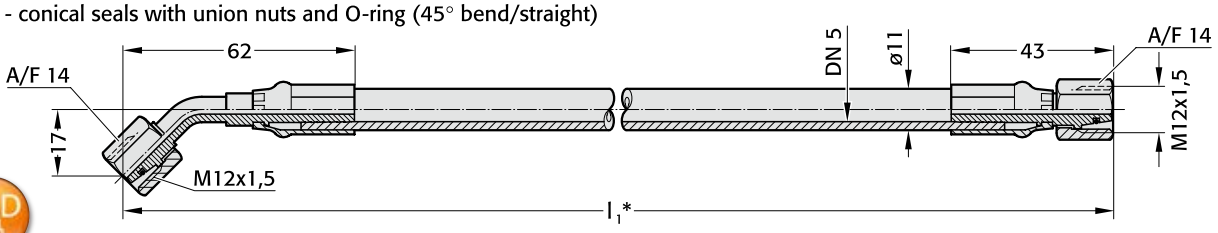

Dimension l_1 specified in the order, e.g. 765 mm, gives order no 2480.00.25.04.0765

2480.00.25.05.

Hose - conical seals with union nuts and O-ring (45° bend/both ends)

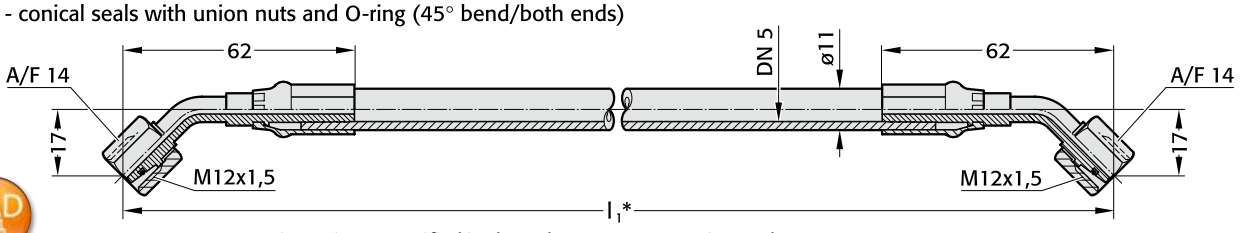

Dimension l_1 specified in the order, e.g. 765 mm, gives order no 2480.00.25.05.0765

2480.00.25.06.

Hose - conical seals with union nuts and O-ring (45° bend/90° bend)

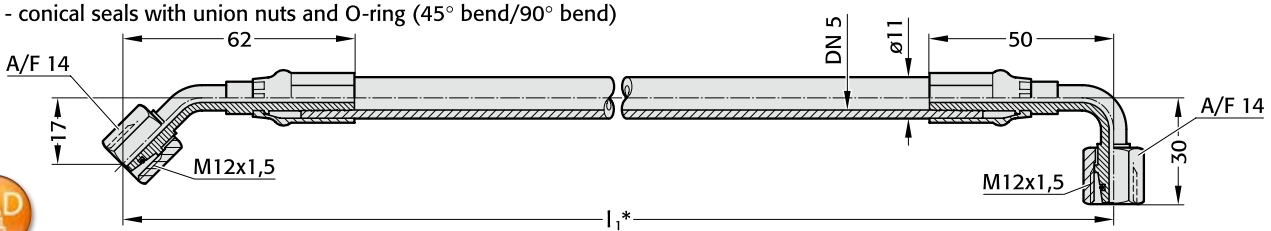

Dimension l_1 specified in the order, e.g. 765 mm, gives order no 2480.00.25.06.0765

Gas springs accessories
Direct connection dimensions
24°-cone threaded joint (DIN 2353 / DIN EN ISO 8434-1)

2480.00.25.12.01

Hose clamp for gauging hose DN5 (Ø11 mm)

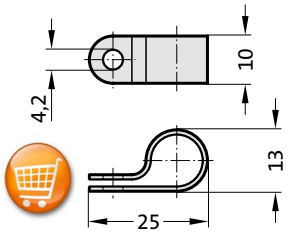

Material: Polyamide

Note:
Supplied without screws

2192.50.04.012

self-tapping screw
A M4x12 DIN 7516

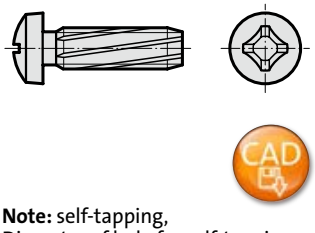

Note: self-tapping,
Diameter of hole for self-tapping screw = 3,6 mm

2480.00.23.13.

Anti-scuff spiral
for subsequent installation over hoses and tubing



Order No	l in mm
2480.00.23.13.0001	1000
2480.00.23.13.0002	2000
2480.00.23.13.0005	5000
2480.00.23.13.0010	10000

Inner-Ø	7 mm
For hose/tubing outer-Ø	max. 5-11 mm
Temperature range	-30 °C to +100 °C

Material:
Polyamide

Description:
The anti-scuff spiral is used to protect against abrasion, is resistant to air, water, oil, hydraulic fluids petrol and other liquids.

Direct connection
with 45°-elbow adaptor
2480.00.26.21

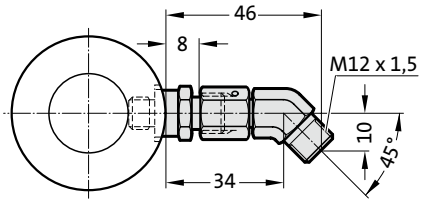

Direct connection
hose straight
adaptor 2480.00.26.03

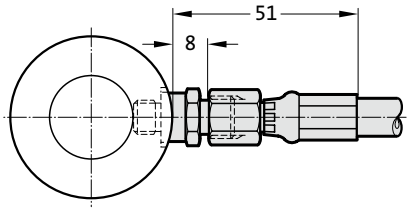

Direct connection
with 90°-elbow adaptor
2480.00.26.22

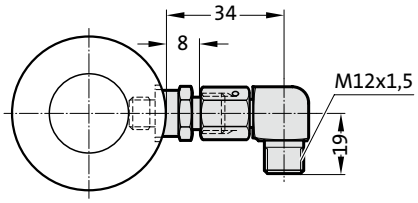

Direct connection
45° hose with
adaptor 2480.00.26.03

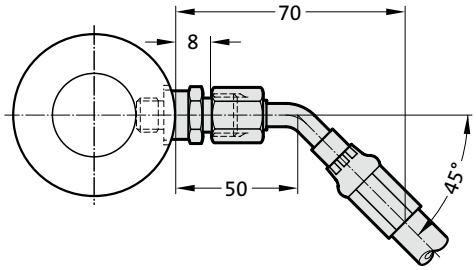

Direct connection
with L-coupling
2480.00.26.23

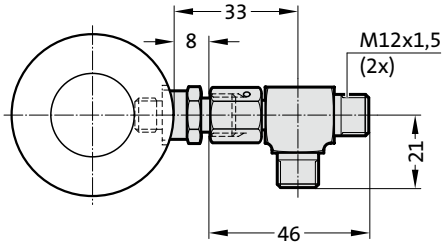

Direct connection
90° hose with
adaptor 2480.00.26.03

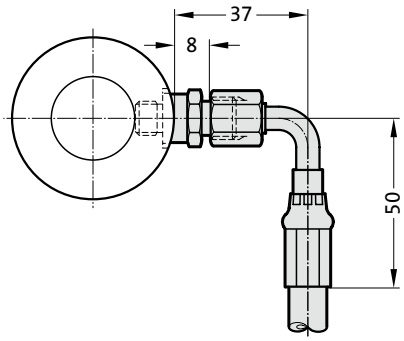

Direct connection
with T-coupling
2480.00.26.24

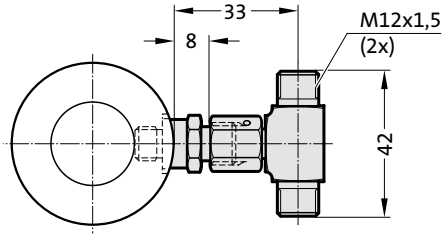

subject to alterations

Gas spring accessories
Connector system, 24° conus micro

2480.00.27.01.

Min. bending radius R20 mm

Connection hose, 24° conus micro, straight on both sides (connection hose, sealing cone with union nut and O ring)

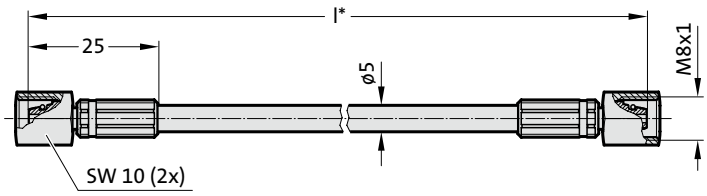

2480.00.27.01.

Order No	l*
2480.00.27.01.0200	200
2480.00.27.01.0300	300
2480.00.27.01.0400	400
2480.00.27.01.0500	500
2480.00.27.01.0630	630
2480.00.27.01.0800	800
2480.00.27.01.1000	1000
2480.00.27.01.1200	1200
2480.00.27.01.1500	1500
2480.00.27.01.2000	2000
2480.00.27.01.2500	2500
2480.00.27.01.3000	3000

2480.00.27.01.....1

Antikink spiral, at one end

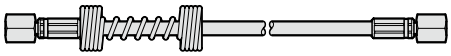

2480.00.27.01.....2

Antikink spiral, at both ends

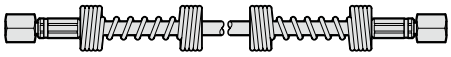

* other lenghts available in 5mm steps.

Shortest factory lengths:	
without antikink protection	90 mm
antikink protection at one end	150 mm
antikink protection at both ends	300 mm

2480.00.23.13.

Anti-scuff spiral
for subsequent installation over hoses and tubing



Order No	l in mm
2480.00.23.13.0001	1000
2480.00.23.13.0002	2000
2480.00.23.13.0005	5000
2480.00.23.13.0010	10000

Inner-Ø 7 mm
For hose/tubing
outer-Ø max. 5-11 mm
Temperature range -30 °C to +100 °C

Material:
Polyamide

Description:
The anti-scuff spiral is used to protect against abrasion, is resistant to air, water, oil, hydraulic fluids petrol and other liquids.

2480.00.23.12.01

Hose clamp for gauging hose DN2 (Ø5 mm)

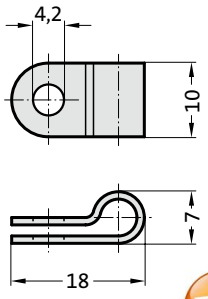

Material: Polyamide

Note:
Supplied without screws

2192.50.04.012

self-tapping screw
A M4x12 DIN 7516

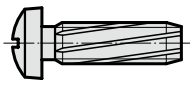

Note: self-tapping
Diameter of hole for self-tapping screw = 3,6 mm

Gas spring accessories
Connector system, 24° conus micro

2480.00.27.11

Pipe for 24° conus micro
Delivery length: 1 m

Min. bending radius R12 mm
(3x exterior diameter)

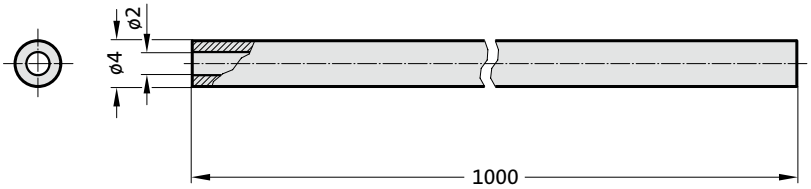

2480.00.27.11.01

Cutting ring screw connection, 24° conus micro

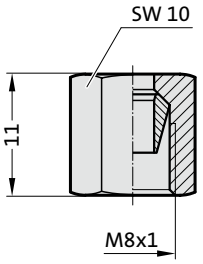

2480.00.27.00.01

Deburring tool for 24° conus micro

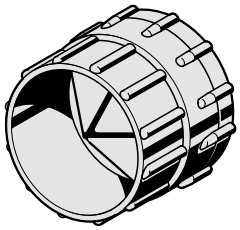

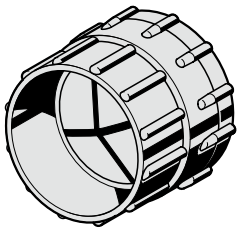

2480.00.27.00.02

Pipe cutter for 24° conus micro

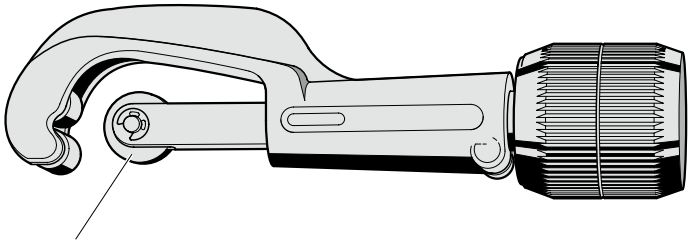

2480.00.27.00.02.1

Replacement cutting wheel for pipe cutter

subject to alterations

Gas spring accessories
Connector system, 24° conus micro

2480.00.28.01

Screw connection GE–M6–24° conus micro

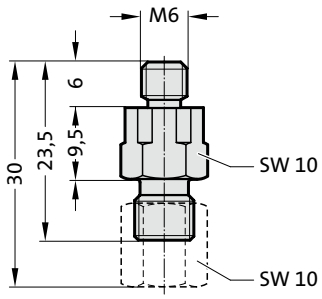

2480.00.28.02

Screw connection GE–G$^1/_8$ 24° conus micro

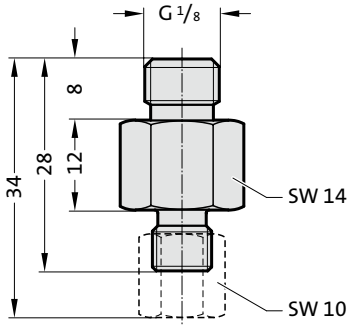

2480.00.28.03

Screw connection GE–G$^1/_4$ 24° conus micro

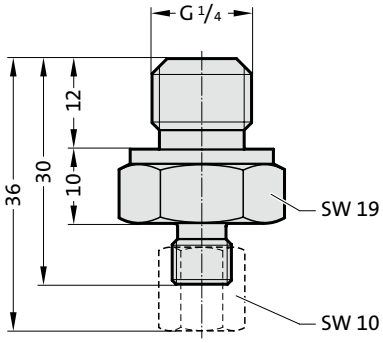

2480.00.28.14

Screw connection T–24° conus micro

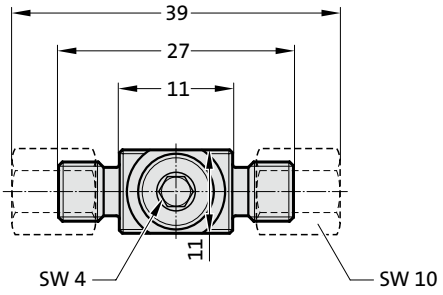

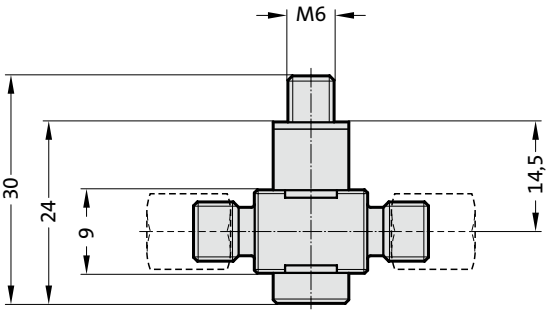

2480.00.28.17

Screw connection W–24° conus micro

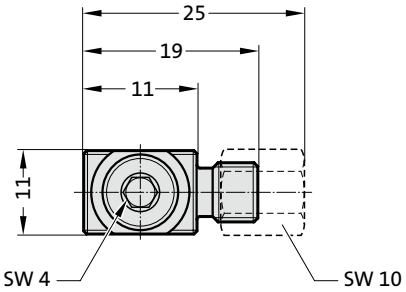

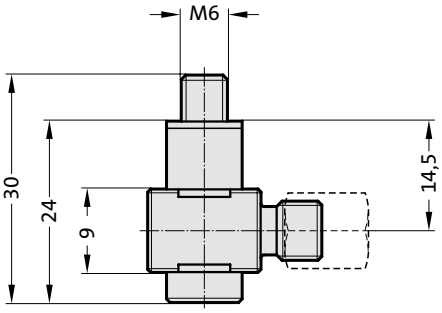

Gas spring accessories
Connector system micro

2480.00.22.06.06

Screw connection, GE–M6–M6 micro for connection to gas spring with divided wheel flange 2480.022.

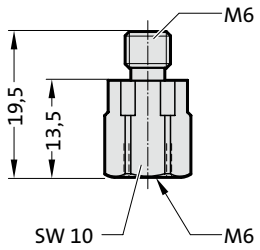

2480.00.22.18.06

Screw connection, GE–G$^1/_8$–M6 micro for 2480.00.28.14 / 2480.00.28.17

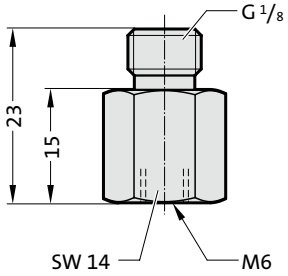

2480.00.22.14.06

Screw connection, GE–G$^1/_4$–M6 micro for 2480.00.28.14 / 2480.00.28.17

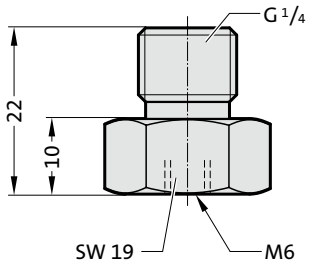

2480.00.28.15

Screw connection, L–24° conus micro

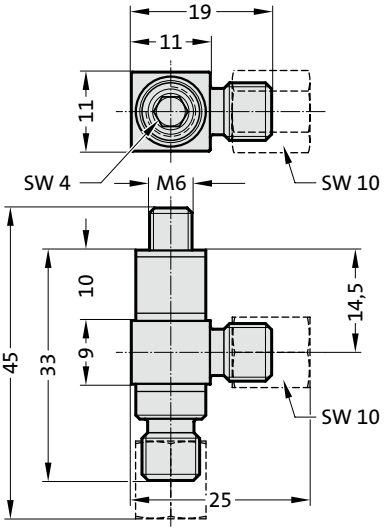

2480.00.28.16

Screw connection, K–24° conus micro

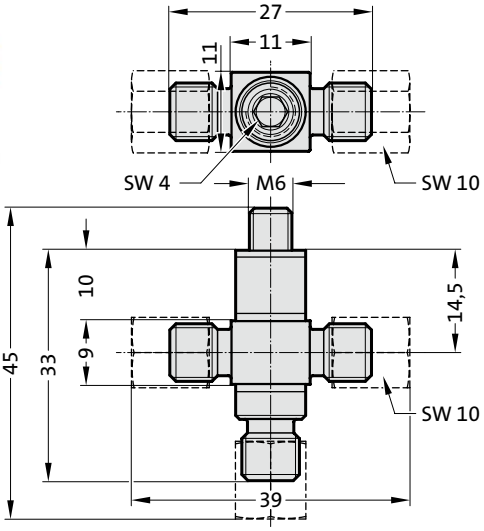

subject to alterations

Gas spring accessories
Connector system, 24° conus micro

2480.00.28.25

Adapter, GE–24° conus micro
hose – hose

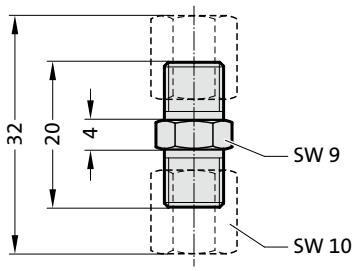

2480.00.28.26

Adapter, W–24° conus micro
hose – hose

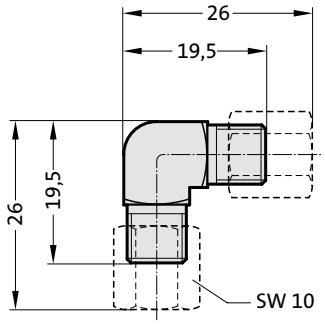

2480.00.28.27

Adapter, T–24° conus micro
hose – hose

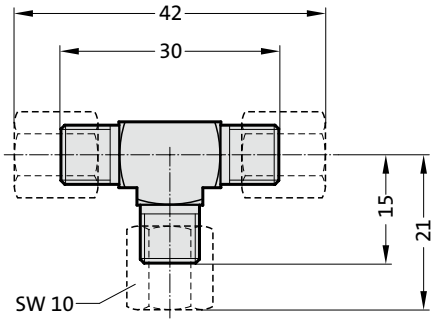

2480.00.28.28

Adapter, K–24° conus micro
hose – hose

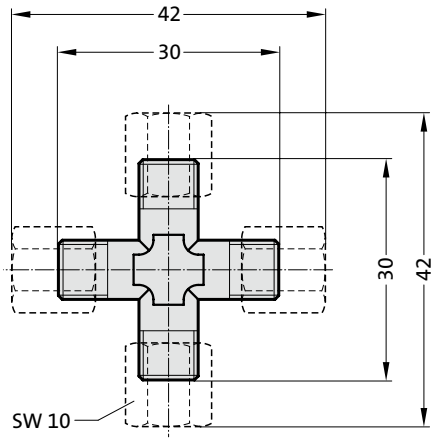

2480.00.28.34

Distributor block M6, 4 ports

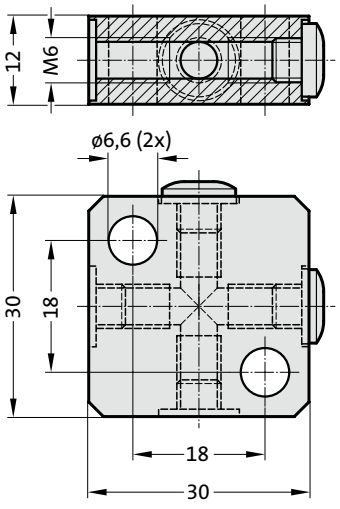

Micro control fitting
without pressure relief
with pressure relief

Description:

The micro control fitting 2480.00.34.11/13 is used to constantly monitor the charge pressure of one or more Gas Springs (3x5 connections M6, top, bottom, back and 1x at the side).

Note:

* 2 m long filling hose with rapid coupling, shut-off valve and gas bottle connector
  Order no: 2480.00.31.02 (to be ordered separately)

2480.00.34.11 without pressure relief
2480.00.34.13 with pressure relief

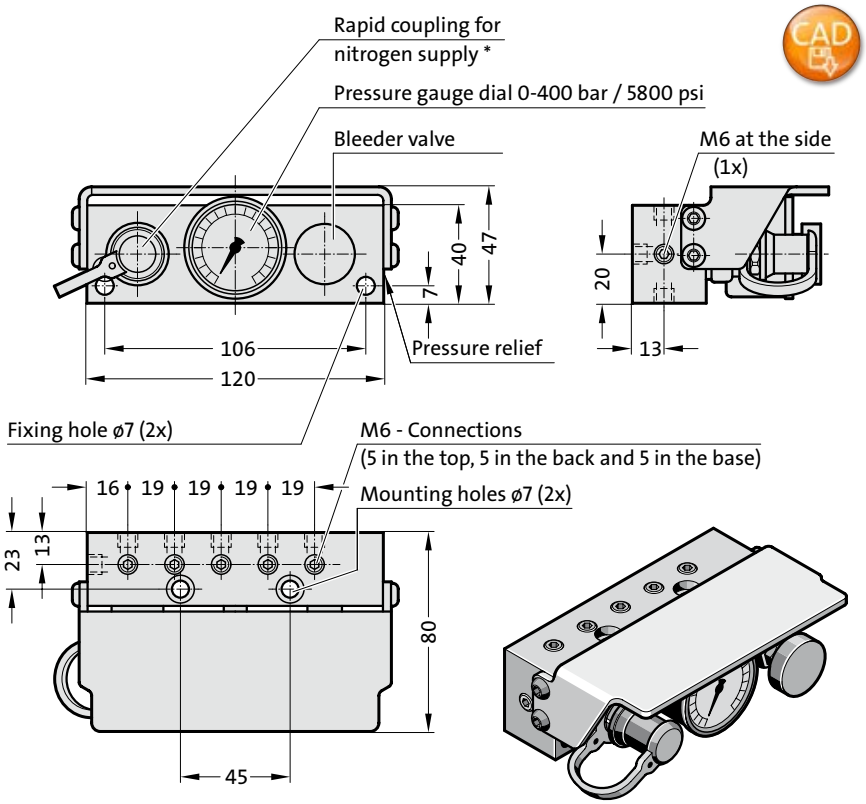

subject to alterations

Control fitting for gas springs

2480.00.30.01 without pressure switch, without pressure relief
2480.00.30.02 with pressure switch, without pressure relief
2480.00.30.03 without pressure switch, with pressure relief
2480.00.30.04 with pressure switch, with pressure relief

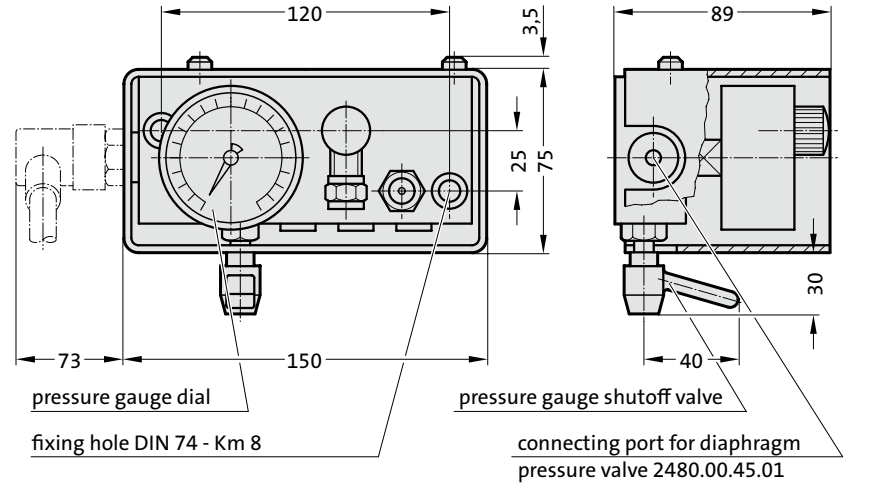

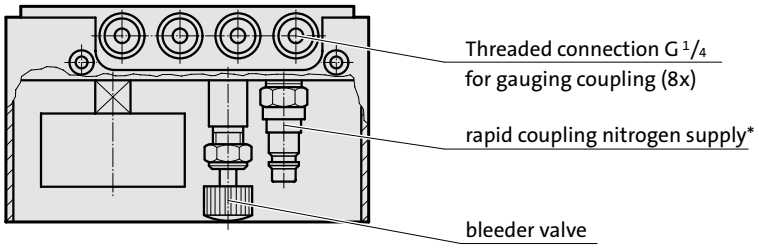

Description:

The control fitting 2480.00.30.01/02/ 03/04 serves to control the charge presure of up to eight connected gas springs.

Pressure checks during operation can be effected in two ways:

a) by visual monitoring of the gauge dials.

b) automatically, by means of diaphragm pressure switch 248.00.15 The switch will stop the associated machine as soon as the charge pressure drops below the value set.

Note:

The shutoff valve may be open or closed during operation.

The closing of the pressure gauge shutoff valve ensures that no pressure peaks from the gas spring act on the pressure gauge.

* 2-m long filling hose with rapid coupling, shutoff valve and gas bottle connector, Order No. 2480.00.31.02 (to be ordered separately)

2480.00.31.01 without pressure switch
2480.00.31.06 with pressure switch
2480.00.31.07 without pressure switch and with pressure relief

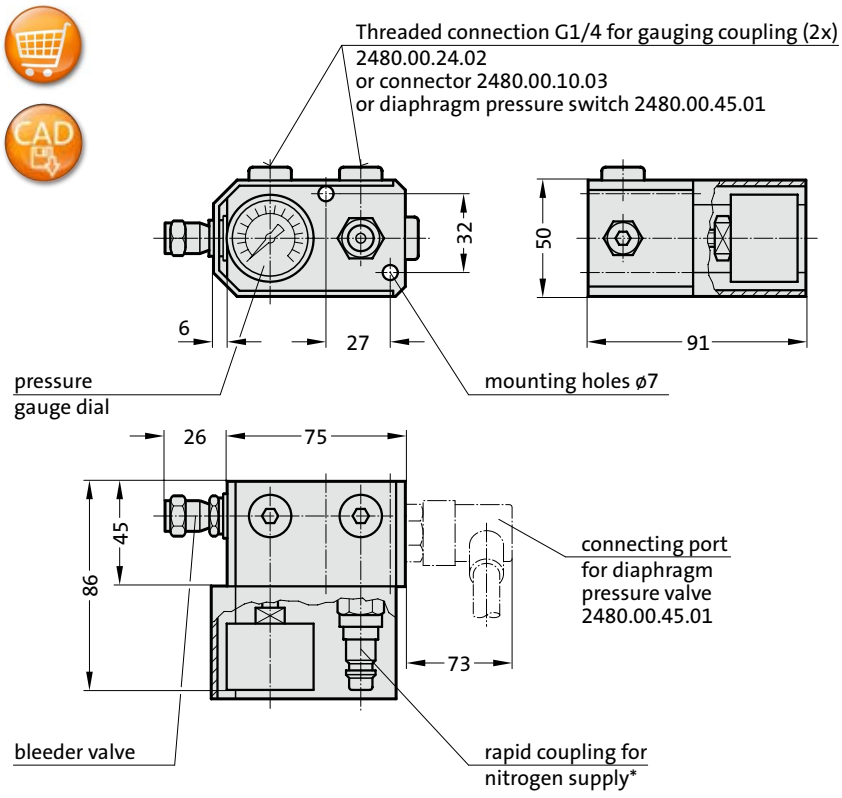

Description:

The control fitting 2480.00.31.01 performs the same function as the control armature 2480.00.30.01.

Note:

* 2-m long filling hose with rapid coupling, shutoff valve and gas bottle connector, Order No. 2480.00.31.02 (to be ordered separately)

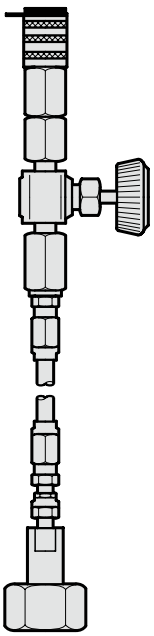

Control fitting without pressure switch, including pressure relief

2480.00.30.13 without pressure switch, with pressure relief

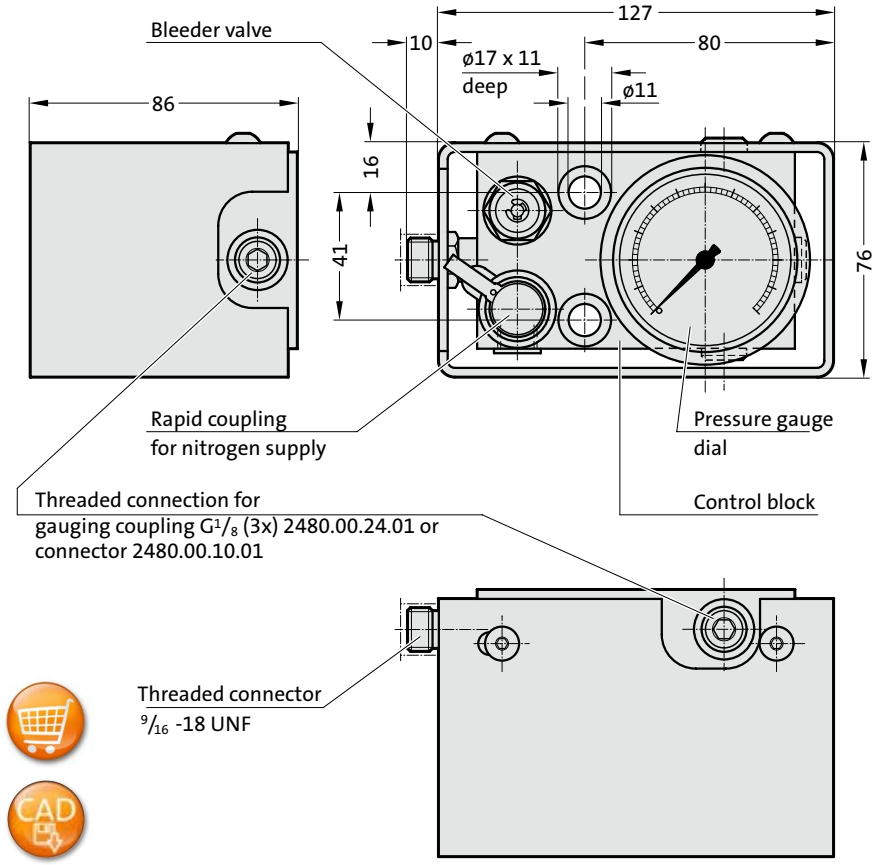

2480.00.30.13

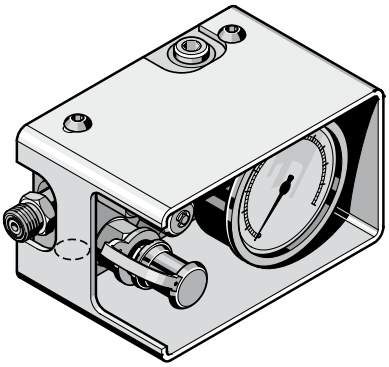

Description:

The control fitting 2480.00.30.13 is used to constantly monitor the filling pressure of one or more gas springs. The control fitting is equipped with rapid coupling for nitrogen supply and a bleeder valve. There are three $G^1/_8$ ports for simultaneous pressure checking at the control fitting.

Measuring range from
0 - 400 bar / 5800 psi.

Multiple control fitting

2480.00.39.05. Multiple control fitting

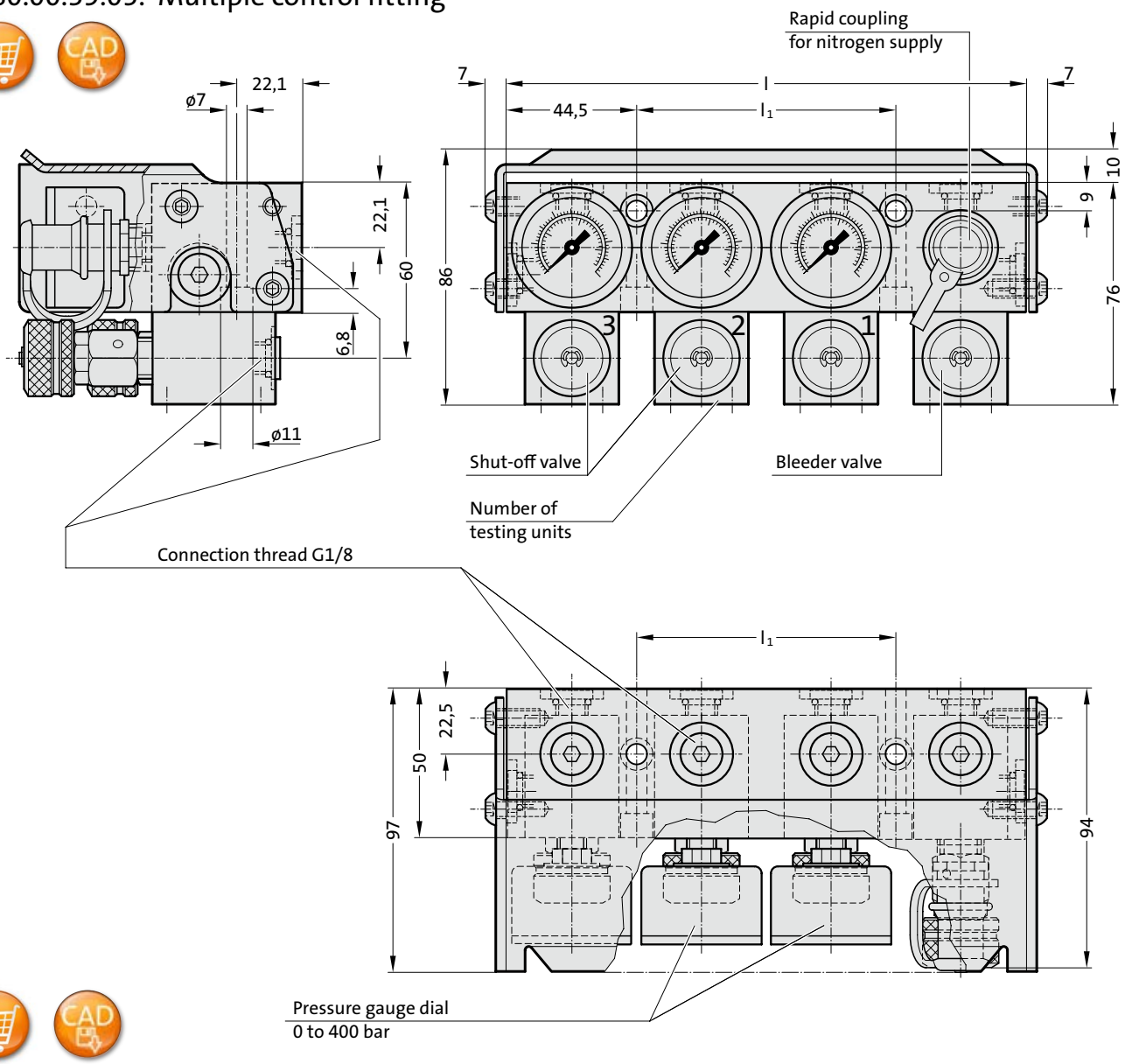

Description:

The multiple control fitting is required if it is necessary to check or set the filling pressure of each spring or spring assembly individually.

The filling of the springs is done at a central position using the rapid coupling for nitrogen supply. Each testing unit is provided with three threaded connections for the optional hose connection.

The cover protects against mechanical damages.

2480.00.39.05. Multiple control fitting

Order No	Quantity of testing units	l	l_1
2480.00.39.05.02	2	133.5	44.5
2480.00.39.05.03	3	178.0	89.0
2480.00.39.05.04	4	222.5	133.5
2480.00.39.05.05	5	267.0	178.0
2480.00.39.05.06	6	311.5	222.5
2480.00.39.05.08	8	400.5	311.5
2480.00.39.05.10	10	489.5	400.5

Control fitting with pressure relief

2480.00.31.11

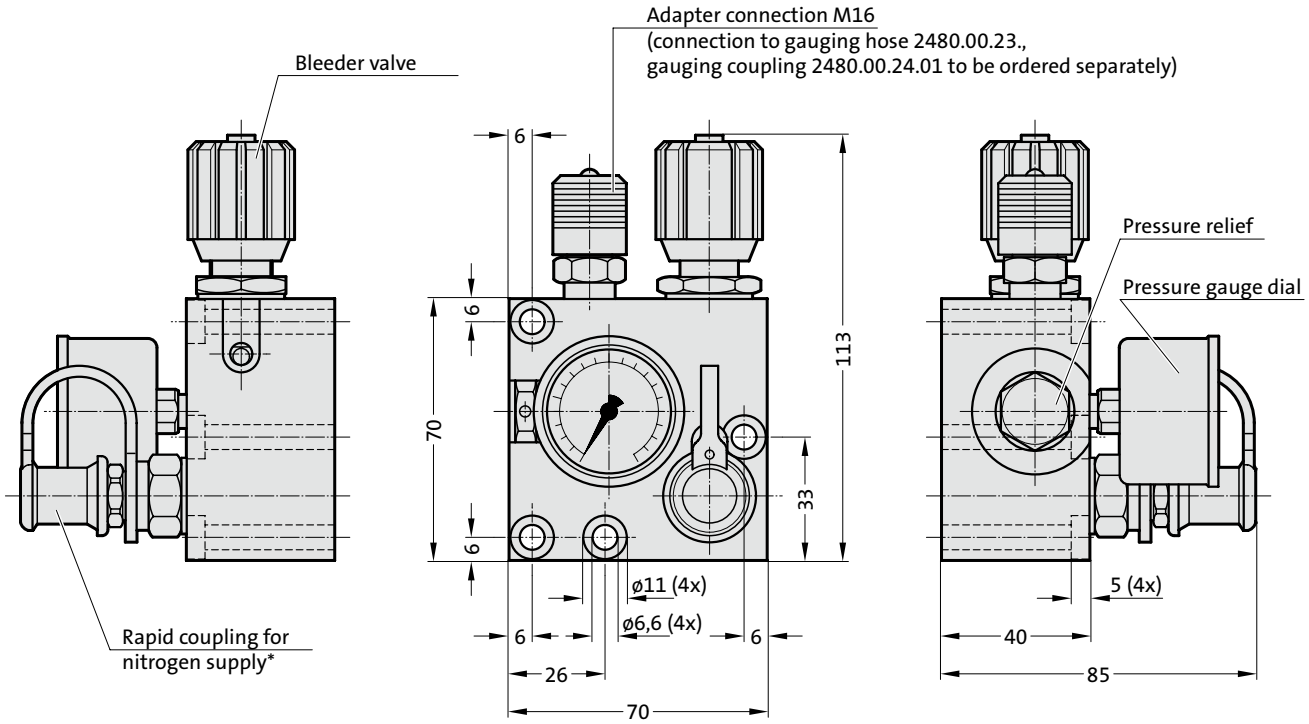

Description:

The control fitting with pressure relief 2480.00.31.11 (Faure) is used for continuous monitoring of the filling pressure of one or more gas springs (one connection $G^1/_8$-M16).
During operation the pressure can be checked by visual monitoring of the pressure gauge.

Note:

To connect the measuring hose system 2480.00.23, remove M16 connection adapter and screw in the gauging coupling with valve 2480.00.24.01 (to be ordered separately).

When installing gas springs always remove the valve from the gas spring.

* 2 m long filling hose with rapid coupling, shut-off valve and gas bottle connector, Order no. 2480.00.31.02 (to be ordered separately)

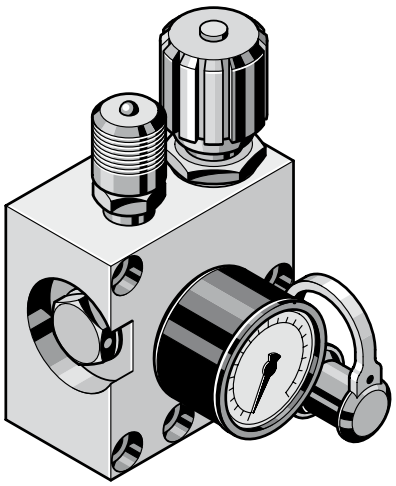

Stacked control fittting for individual control

2480.00.39.01

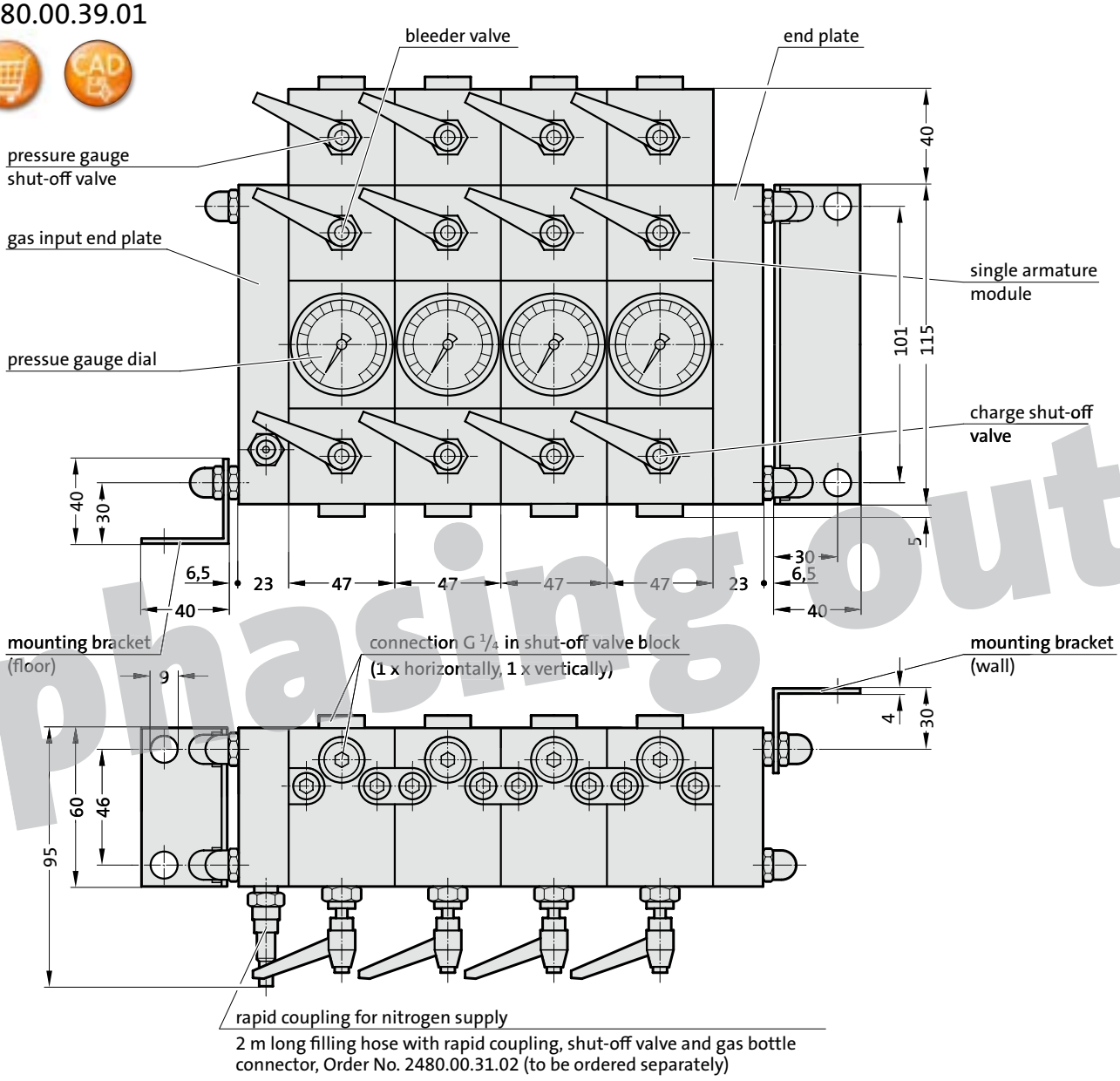

phasing out

Description:

Stacked control fittings are required where it is necessary to control the charge pressure of each gas spring individually. The fitting models can be stacked together ad libidum.
Recharging of any to the spring units connected can be effected centrally via the rapid couplings and the appropriate charging valves. Each stack is equipped with an input end plate with rapid coupling, and an end plate sealing off the opposite side. The number of armature modules depends on the number of gas springs in question. The stack can be supplied for wall mounting or for installation on the floor.

Note:

When all charge valves are opened the springs are interconnected with one another.

Ordering Code (example):

Stacked control fitting	= 2480.00.39.01.	
5 modules	= 005.	
with floor-mount	= 1	
with wall-mount	= 2	
Order No	= 2480.00.39.01.005.1	or 2

Diaphragm pressure switch
Adapter block
Screw connection GE - G 1/8 - G 1/4



2480.00.45.01
2480.00.45.02

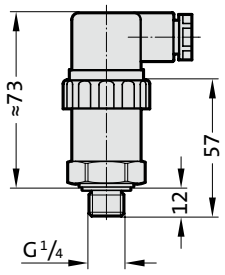

Technical data of Diaphragm pressure switch

2480.00.45.01	
switching range, adjustable	20-250 bar
switching tolerance	±5.0 bar
overpressure protection	350 bar
voltage (max.)	250 V
2480.00.45.02	
switching range, adjustable	10-80 bar
switching tolerance	±1.6 bar
overpressure protection	350 bar
voltage (max.)	250 V

Note:

for monitoring pressure of single gas springs see adapter 2480.00.45.10

Circuit diagram for diaphragm pressure switch

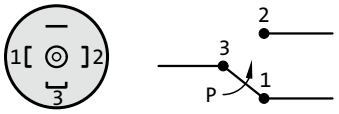

2480.00.45.10

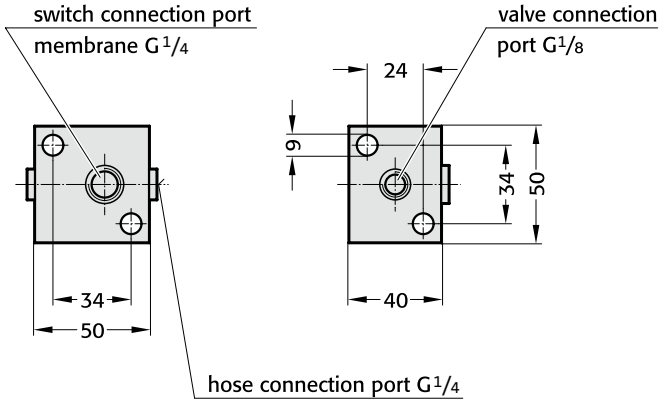

2480.00.45.00.01.18.14

Screw connection GE - G 1/8 - G 1/4 for Control fitting with connection thread G 1/8

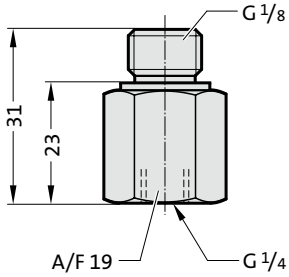

Installation example:

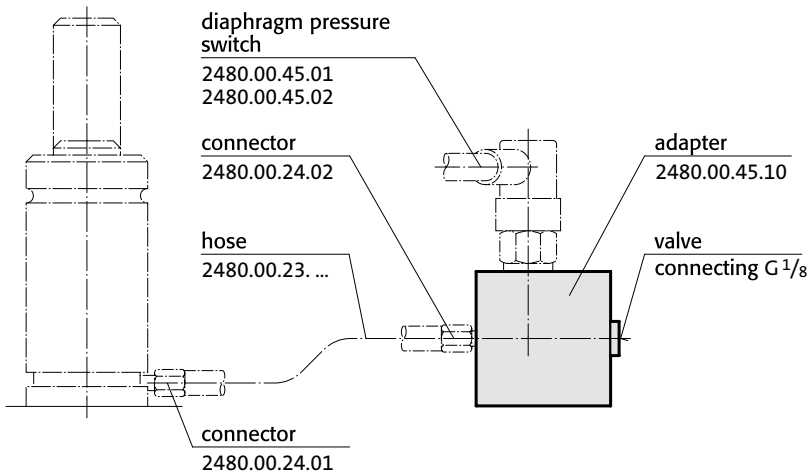

Description:

In conjunction with diaphragm pressure switch 2480.00.45.01 or .02, the adapter 2480.00.45.10 permits the monitoring of the charge pressure: if the pressure drops below a set value, the diaphragm pressure switch operates and emits a signal or stops the machine.

subject to alterations

Wireless Pressure Monitoring (WPM)

Wireless Pressure Monitoring (WPM)

Wireless monitoring of gas springs

The core requirements on any pressing plant are: Automation and zero-defect production.
Prerequisite is also real-time process control.
The FIBRO Wireless Pressure Monitoring (WPM) system monitors gas springs in all areas in which cable or hose-reliant systems reach their technical limitations, or are simply uneconomical.

The WPM system monitors temperature and pressure in gas springs.

It consists of a coordinator and a sensor, which transmit wireless data to any designated Windows-based system. Custom software analyses the data and initialises the necessary process control and pre-emptive maintenance steps accordingly.

Advantages:

- Around-the-clock monitoring and documentation
- Alert to defects avoiding production of faulty parts
- Pre-emptive wear detection and targeted troubleshooting
- Prevention of downtime and secondary failures
- Minimisation of leakage points
- Streamlined construction and assembly
- Optimised maintenance intervals and reduction of maintenance and repair costs

Monitoring system - Method of operation

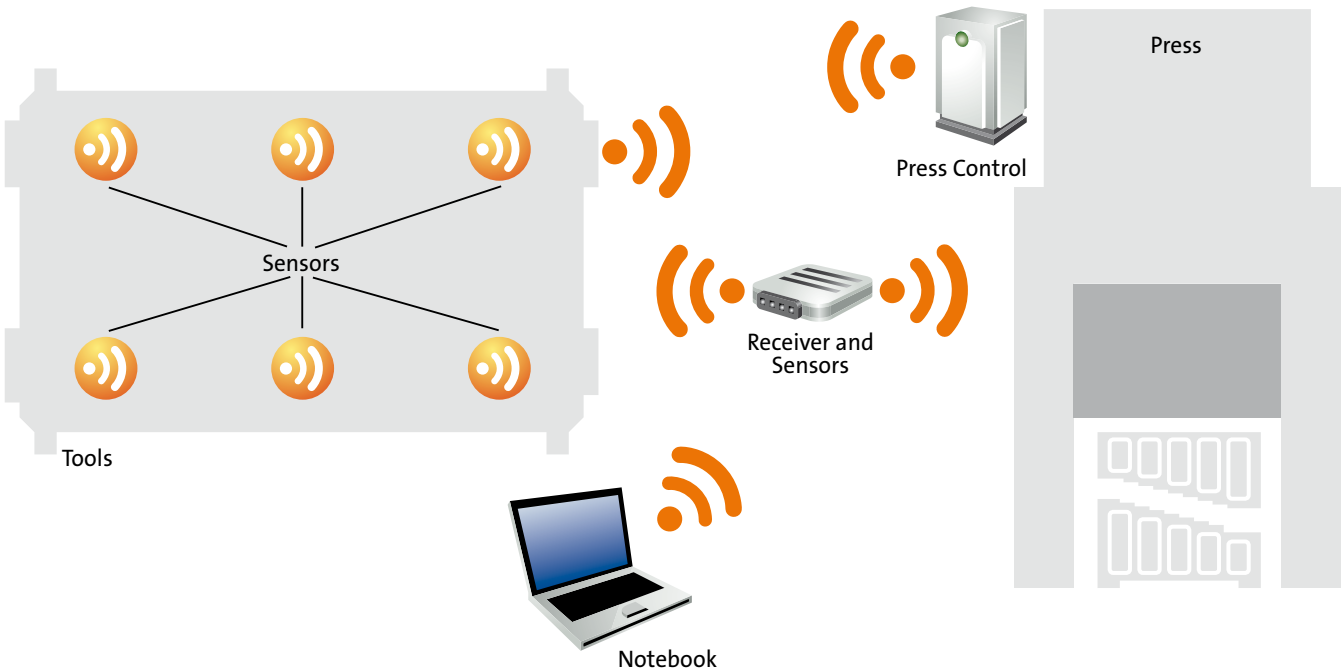

The WPM system contains up to four components:

- Sensors in the pressing tool. These form a PAN (Personal Area Network).
- PC with receiver:
  A device for setting up the PAN and for initial parameterisation of the tool sensors.
- Press coordinator COO, which is permanently installed on the press, and which communicates with the tool sensors and the press controller. (Customer-specific)
- Press control connection. There are various connection options available. (Customer-specific)

Wireless Pressure Monitoring (WPM)
Receiver
Software

2480.00.90.20.01

(in the scope of delivery)
Receiver, PC - USB2.0
incl. software CD for the PC



2480.00.90.20.01

Receiver, PC - USB2.0



2480.00.90.51.01.0

Software CD for PC

Measuring example

Setting and display options for pressure and temperature variance

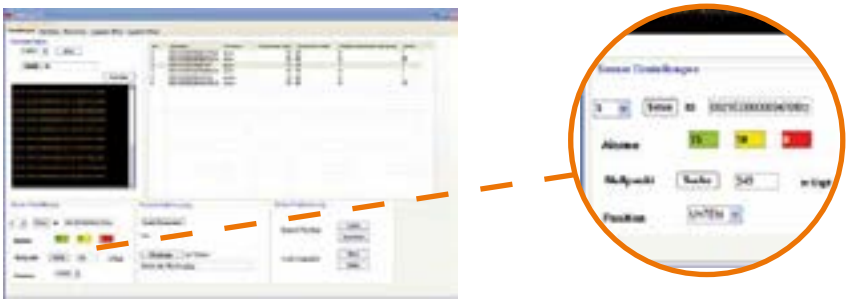

Zero-defect production

Before and during the use of tools in the press, the WPM monitors the level of pressure of all gas springs.
The system reports defects pre-emptively before a faulty part can be manufactured. Definable warning and alarm value limits.

Gas spring location and status control via tool sensors



Targeted maintenance

Temperature monitoring detects erosion before any drop of pressure occurs in the spring. System locates defective spring in case of malfunction. Downtime can be pre-emptively reduced or avoided.
The WPM system enables wear-specific maintenance intervals that significantly reduce maintenance and repair compared to fixed intervals.

Streamlined construction and assembly

Tool manufacturers need solely consider the position of sensors and springs. No need to install tube lines during assembly which means leakages are a thing of the past.

Process control documentation (Pressure/Time diagram)

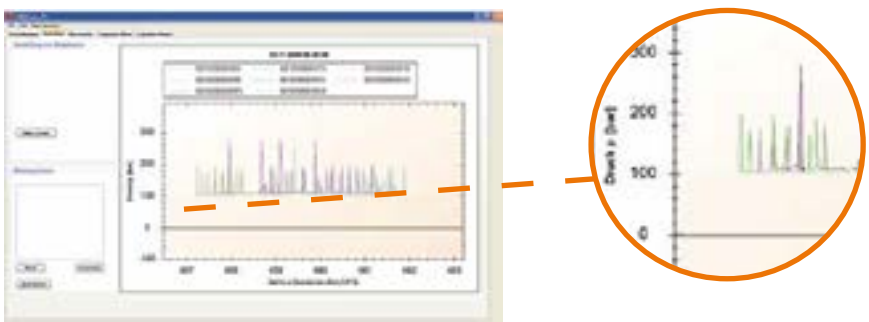

Wireless Pressure Monitoring (WPM)
Sensor
Filling adapter, Battery

Mounting Example:
Sensor - Gas spring connection

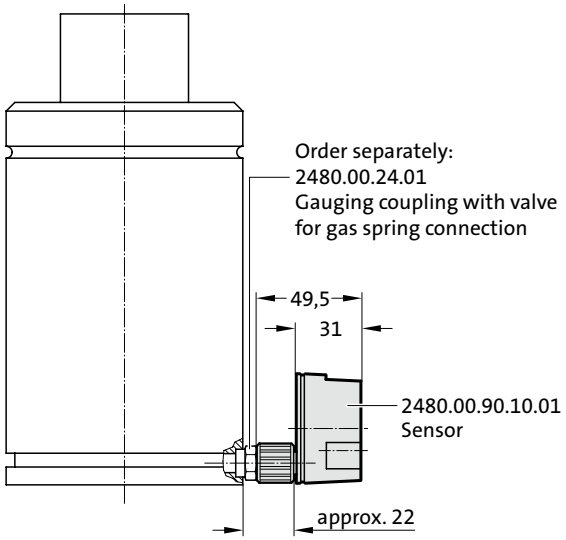

2480.00.90.10.01
Sensor

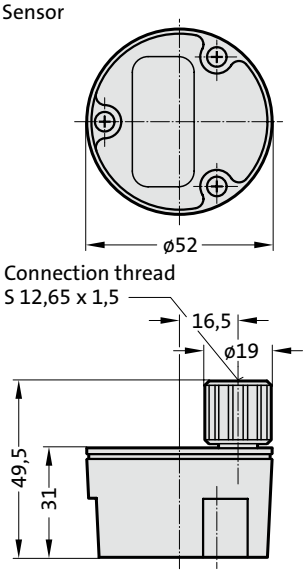



Mounting example:
Sensor - Control fitting connection

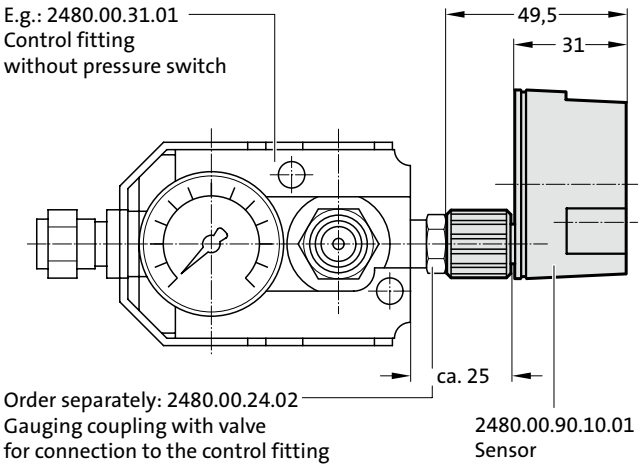

2480.00.90.00.10
Filling adapter for minimess connection

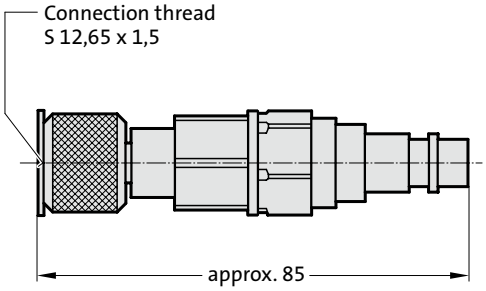

2480.00.90.10.01 Sensor Technical data:

Installation location:	any
Pressure medium:	Nitrogen - N_2
Ambient and operating temperature range:	0° C to +80°C
Storage temperature range:	-25 to 80°C
Protection type:	IP 67
Pressure range:	0 - 500 bar
Per. overload:	Factor 1.5
Hysteresis:	+/- 0.5% v. EW
Linearity:	+/- 1% of max. Setup pressure
Repeatability:	+/- 0.5% v. EW
Bursting pressure:	Factor 2.5
Seals:	FKM (Viton)
Material:	Floor plate: VA steel, with welded in sensor Housing: Plastic ABS, Colour: black
Temperature drift:	< 0.2% / 10k (0°C to 80°C)
Temperature measuring range	0 to 85°C
Mechanical connection:	Minimess connection S 12.65 x 1.5 for gauging coupling 2480.00.24.01/.03
Energy supply sensor unit:	3.6 V DC via Battery
Digital interface Sensor unit and wireless module:	SPI /I2C

2480.00.90.10.00.1 Battery

Battery for reordering
(Battery is included in the sensor's scope of delivery.)

Battery capacity 3-4 years with "normal" tool use

subject to alterations

Filling and control fitting
Filling hose
Cylinder pressure regulator

Description:

The filling and control fitting 2480.00.32.21 is used to fill, vary the pressure setting (e.g. when testing tools) and measure the gas pressure.

The coupling enables the filling hose 2480.00.31.02 to be connected directly to the gas cylinder valve or the pressure regulator.

If the fitting is used solely for checking purposes, a simplified arrangement without the filling hose 2480.00.31.02 is also possible.

The fitting is equipped with an additional adapter 2480.00.32.11 for connecting to gas springs with G 1/8 valve connection as standard.

Note:

2 m long filling hose with quick release coupling, shut-off valve and gas bottle connector, order no. 2480.00.31.02 (order separately).

Other filling hose lengths to order.

2480.00.32.21 Filling and control fitting

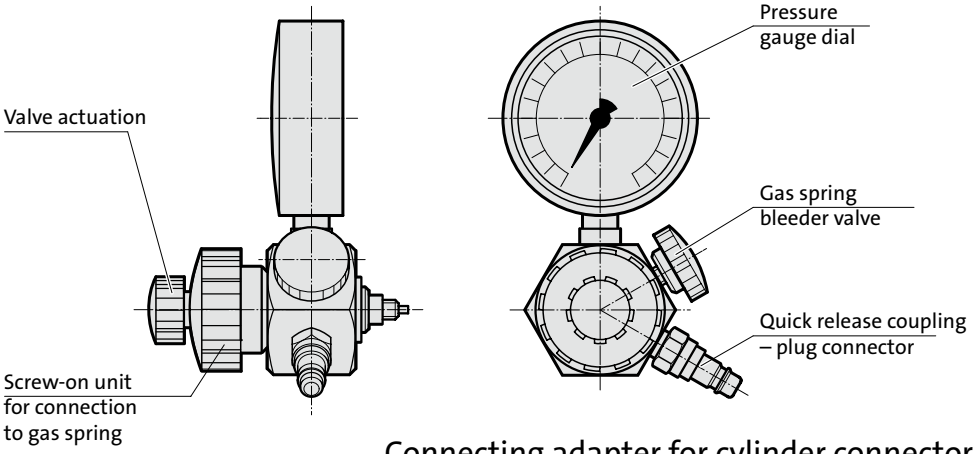

Connecting adapter for cylinder connector

Order No.	Country	For cylinder connector
2480.00.31.02.00.10	France	AFNOR C, W21,8x1/14
2480.00.31.02.00.11	China	G 5/8-ISO228
2480.00.31.02.00.12	Great Britain	G 5/8

2480.00.31.02 Filling hose

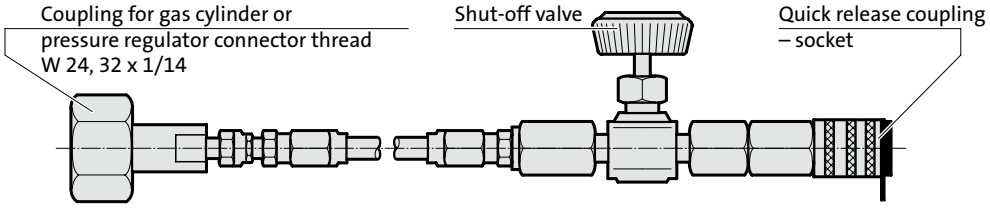

Description:

The pressure regulator 2480.00.32.07. is designed for 200 bar connections and for 300 bar gas cylinders.

The filling and control fitting 2480.00.32.21 is connected to the cylinder pressure regulator for filling gas springs using filling hose 2480.00.31.02 and connector adaptor 2480.00.32.07.04.

Depending on the type of gas cylinder, the gas cylinder connector used can either be the 2480.00.32.07.02 for 200 bar cylinders or the 2480.00.32.07.03 for 300 bar cylinders.

Max. admission pressure	300 bar
Back pressure	10-200 bar

Other benefits:

- Hasty opening of the gate valve on the filling and control fitting 2480.00.32.21 cannot result in overfilling.
- It is not necessary to have the pressure display of the filling and control fitting 2480.00.32.21 in view.

2480.00.32.07. Gas cylinder pressure regulator

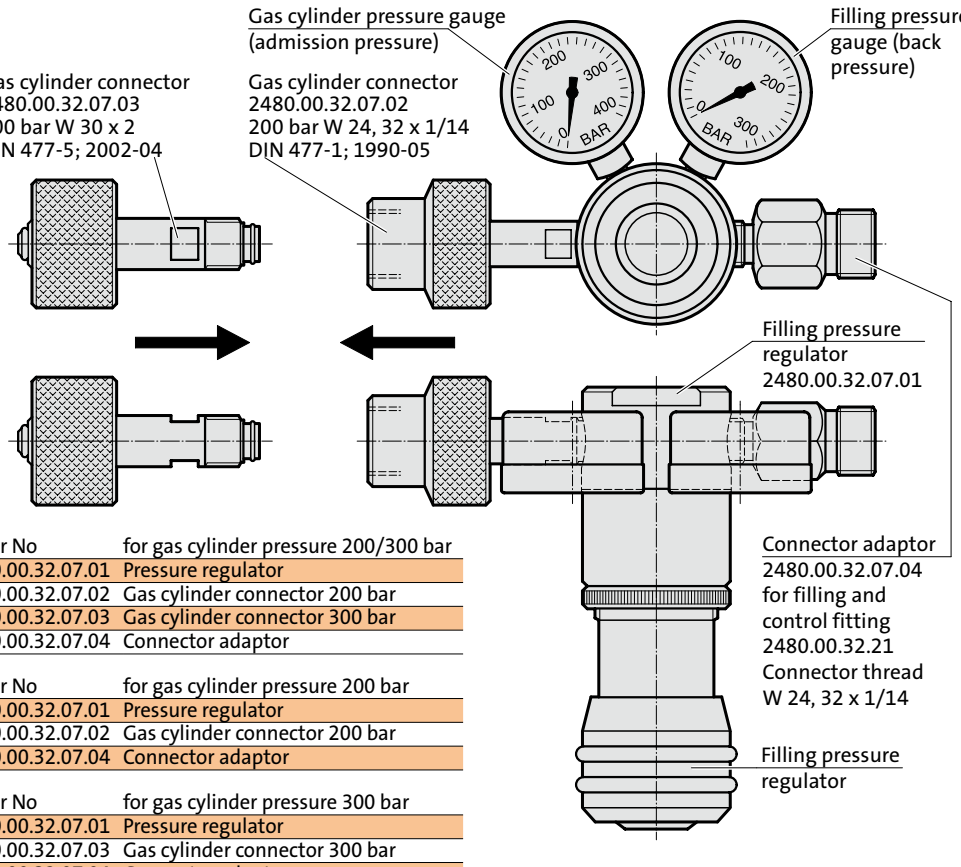

Order No	for gas cylinder pressure 200/300 bar
2480.00.32.07.01	Pressure regulator
2480.00.32.07.02	Gas cylinder connector 200 bar
2480.00.32.07.03	Gas cylinder connector 300 bar
2480.00.32.07.04	Connector adaptor

Order No	for gas cylinder pressure 200 bar
2480.00.32.07.01	Pressure regulator
2480.00.32.07.02	Gas cylinder connector 200 bar
2480.00.32.07.04	Connector adaptor

Order No	for gas cylinder pressure 300 bar
2480.00.32.07.01	Pressure regulator
2480.00.32.07.03	Gas cylinder connector 300 bar
2480.00.32.07.04	Connector adaptor

Compact nitrogen booster for gas spring filling

2480.00.32.71

Compact nitrogen booster
for gas spring filling

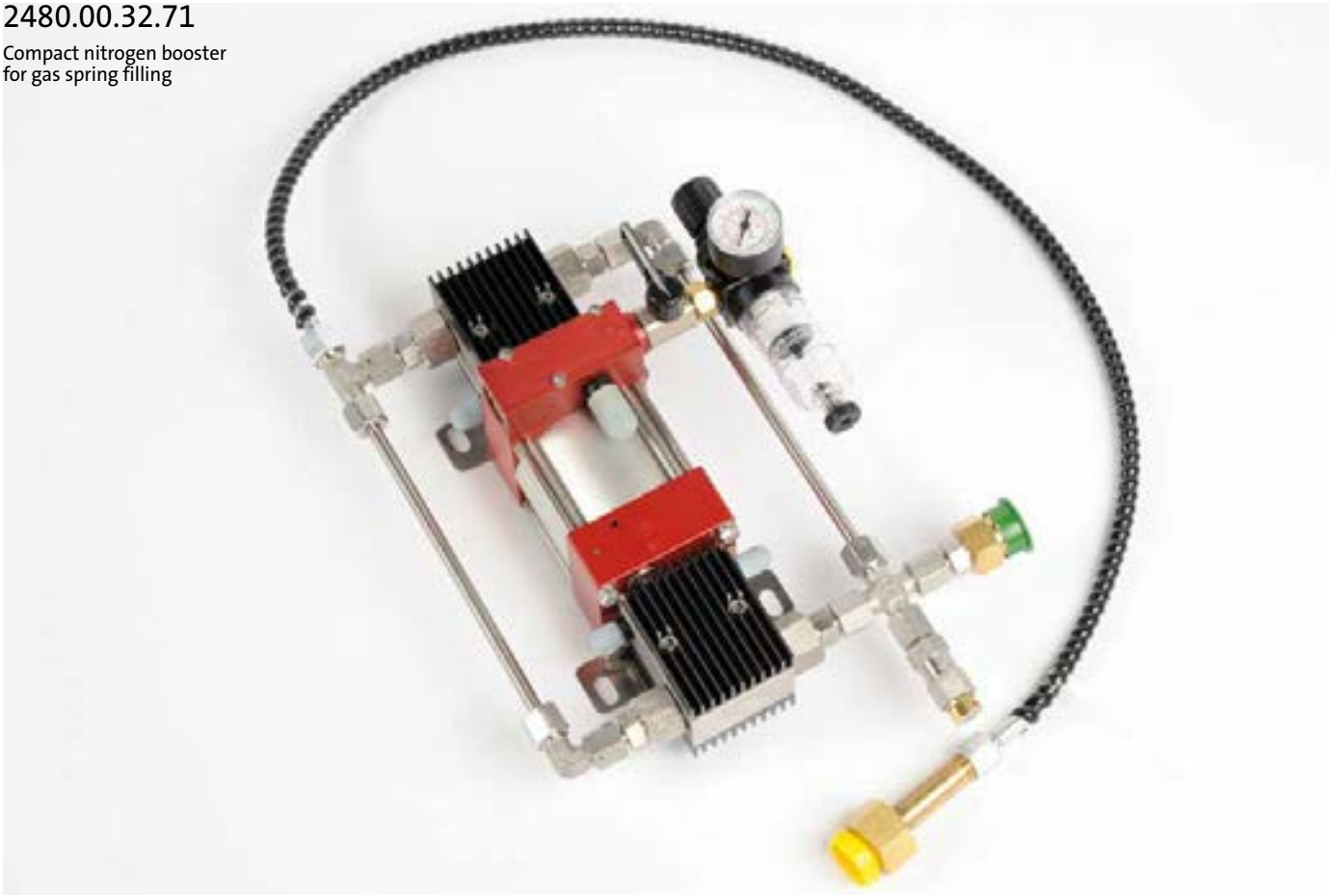

2480.00.32.71

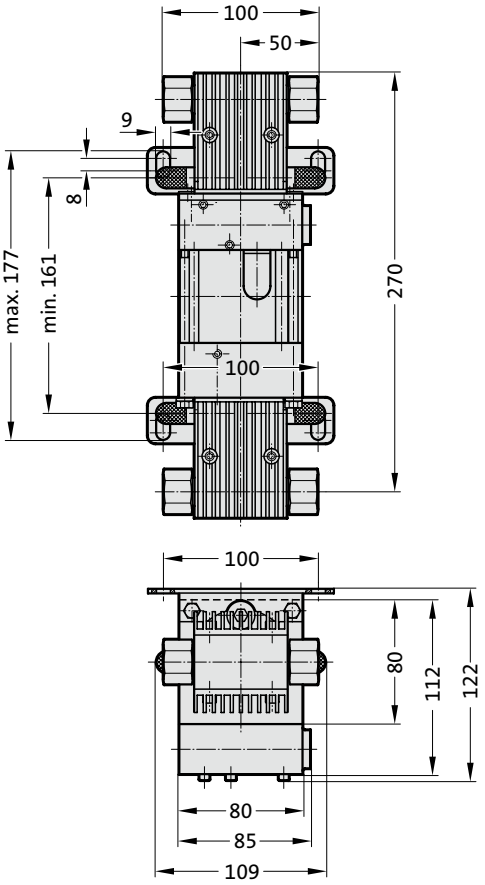

Description:

The FIBRO compact nitrogen booster 2480.00.32.71 was developed to compress nitrogen gas. It increases the output pressure of the nitrogen cylinders considerably.

For example, when filling gas springs, the N_2 cylinders can be used up to a residual pressure of 30 bar.

Advantages:

- ► Increase in utilisation capacity
- ► Reduction in cylinder replacement time
- ► Minimisation of the number of cylinders
- ► Light weight (7.2 kg)
- ► Compact design
- ► Suitable for simple installation directly on all standard nitrogen cylinders (200 bar)

Function:

The FIBRO compact nitrogen booster works according to the principle of a pressure relay valve. Low pressure is applied to a large surface, which in turns applies high pressure to a small surface. Continuous delivery is achieved by means of an internally actuated 4/2-way valve.

Compressed air is used as the drive mechanism.

A holding plate is included to secure the compact nitrogen booster to the nitrogen cylinder. The compact nitrogen booster is simply hung over the nitrogen cylinder connection.

Compact nitrogen booster for gas spring filling
Holding plate

Connection diagram

Compact nitrogen booster



2480.00.32.71.02 Holding plate

for re-order



① 2480.00.32.71 Compact nitrogen booster
② Gas cylinder connection W24, 32 x 1/14 for 200 bar nitrogen cylinder
③ Nitrogen N_2 inlet
④ Compressed air inlet G1/4 max. 10 bar
⑤ Overpressure protection 400 bar
③ Nitrogen N_2 outlet
⑦ Connectingn thread W24, 32 x 1/14

2480.00.32.71.02

Technical data:

Drive compressed air: 1-10 bar

Calculated operating pressure at 10 bar air drive pressure: 300 bar

Transmission ratio: 1:32

Displaced volume/double stroke: 11.6 cm³

Connections:

Compressed air: G 1/4" thread

Nitrogen inlet:
Hose DN4, 1 m long with N_2 cylinder connection 200 bar

Nitrogen outlet:
N_2 cylinder connection 200 bar W24, 32 x 1/14

Max. operating temperature: 60°C

Weight: approx. 7.2 kg

Inlet pressure: 30-300 bar

Average supply rate*: 280 NL/min

* The delivery rate is dependent on the air drive and inlet pressure.

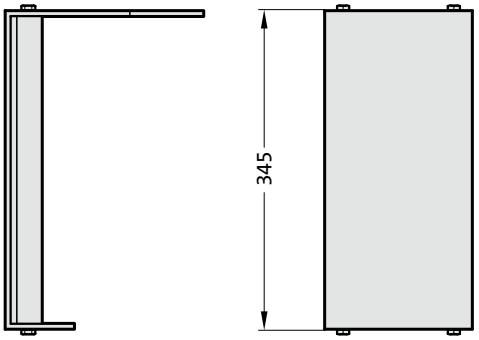

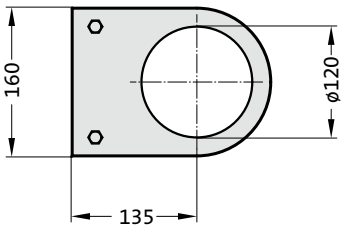

Dynamometer for gas springs

2480.00.35.021
Analogue display



2480.00.35.032
Digital display



Description:

The dynamometer with mechanical measuring device can be used to test the spring force of gas springs up to 8000 daN.
The dynamometer with digital measuring device can be used to test the spring force of gas springs up to 10 000 daN.

The dynamometer 2480.00.35.021 with analogue display is supplied with three interchangeable pressure measuring nozzles different ranges of values:

up to	300 daN
from 300	to 1750 daN
from 1750	to 8000 daN

The dynamometer 2480.00.35.032 with digital display has a pressure measuring nozzle for forces ranging from 0 to 10 000 daN.

Maximum spring installation height	analogous	= 700 mm
	digital	= 760 mm

Dynamometer for gas springs

2480.00.35.04



Description:

The dynamometer with digital measuring device can be used to test the spring force of gas springs up to 2000 daN.

Max. spring installation height: 488 mm.

Max. spring diameter: 150 mm.

FIBRO

Toolkit for assembling gas springs



2480.00.50.11

Toolkit for all gas springs

The toolkit contains:

Pos.	Order No	Term	
1	2480.00.50.01.001	Assembly sleeve	Mini
2	2480.00.50.01.002	Assembly sleeve	00250
3	2480.00.50.01.003	Assembly sleeve	00500
3-1	2480.00.50.01.031	Assembly sleeve (2487.12.00500.)	X500
4	2480.00.50.01.004	Assembly sleeve	00750
5	2480.00.50.01.005	Assembly sleeve	01500
5-1	2480.00.50.01.051	Assembly sleeve (2487.12.01500.)	X1500
6	2480.00.50.01.006	Assembly sleeve	03000
7	2480.00.50.01.007	Assembly sleeve	05000
8	2480.00.50.01.008	Assembly sleeve	07500
9	2480.00.50.01.009	Assembly sleeve	10000
10-1	2480.00.50.01.101	Circlip tool	
13	2480.00.50.01.013	T-lever	M8
14-1	2480.00.50.01.141	T-lever	M16
15	2480.00.50.01.015	T-lever	G 1/8”
16-2 replaces 16-1	2480.00.50.01.162	T-lever, extension	M6
17	2480.00.50.01.017	Valve pliers	
18	2480.00.50.01.018	Valve tool	M6
19	2480.00.50.01.019	Valve tool	G 1/8“
29	2480.00.50.01.029	Special valve spanner	
30	2480.00.50.01.030	Valve tool	VG 5
33	2480.00.50.01.033	Valve tool (2480.00.41.1)	M6
34	2480.00.50.01.034	Handle for disassembling	M3
39-1	2480.00.50.01.391	Tool case	

Description:

Toolkit for assembling and disassembling gas springs.

Note:

Read instructions for use before working on it.
Every tool can be ordered separately.

Assembling cone

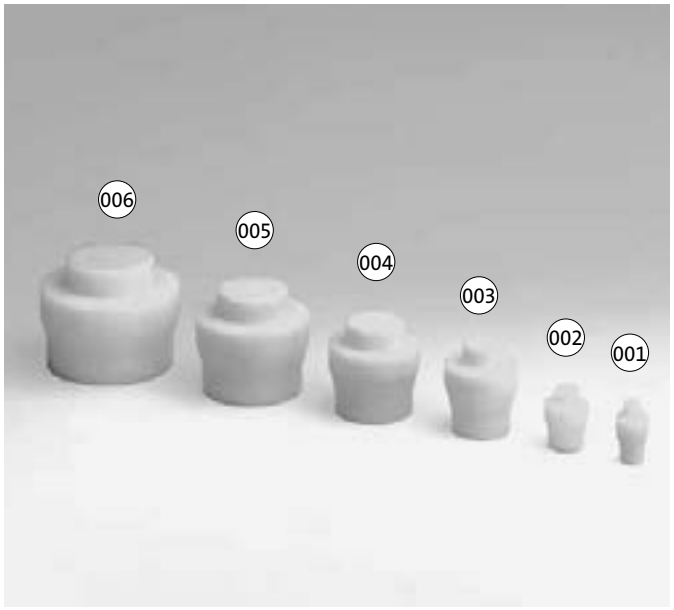

2480.00.50.04.

Assembling cone for gas springs with through bore passage 2496.12.

Pos.	Order No	Term
001	2480.00.50.04.001	Assembling cone 00270
002	2480.00.50.04.002	Assembling cone 00490
003	2480.00.50.04.003	Assembling cone 01060
004	2480.00.50.04.004	Assembling cone 01750
005	2480.00.50.04.005	Assembling cone 03300
006	2480.00.50.04.006	Assembling cone 04250

Service station, mobile, for gas springs

2480.00.50.20.

Service station, mobile, for gas springs

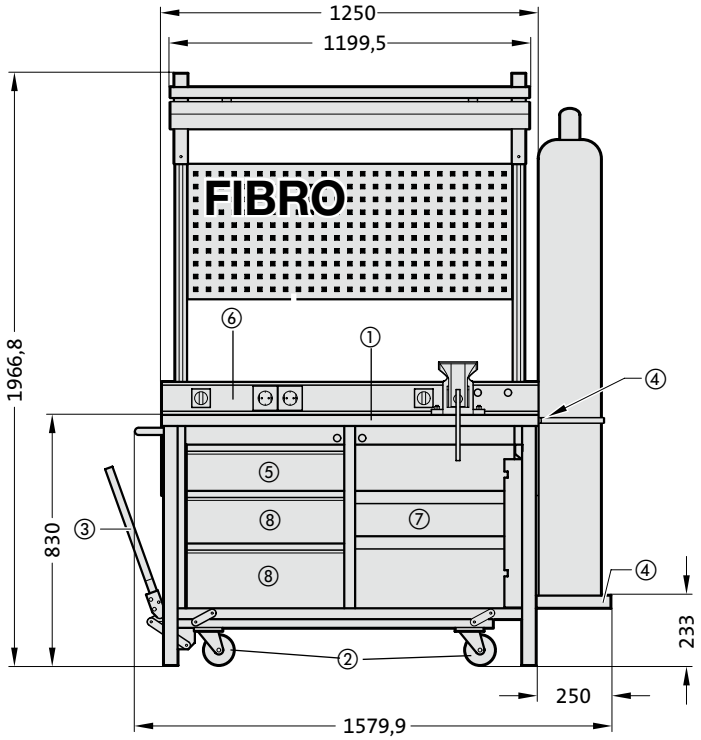

2480.00.50.20.2

Lighting unit, removable

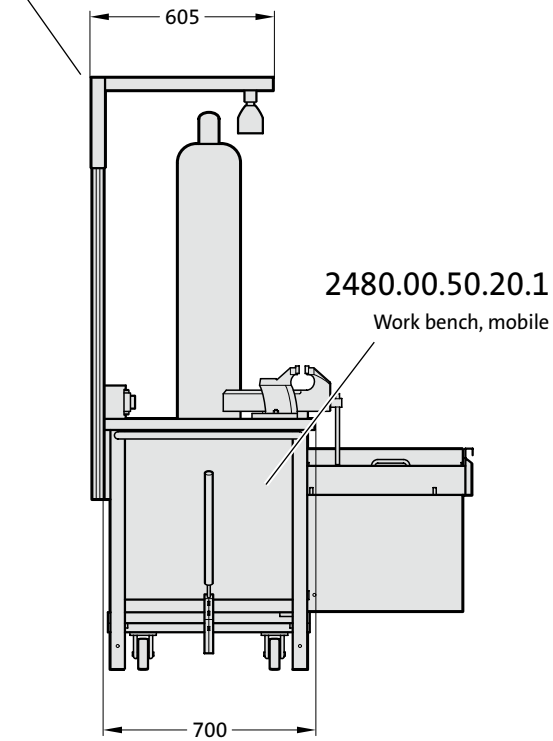

Description:

The mobile service station for gas springs is an optimised solution for the filling/maintenance of gas springs directly on the press or tool.
The service station consists of a mobile work bench 2480.00.50.20.1 and a removable light unit 2480.00.50.20.2.

Advantages:

- "All in One" solution
- High mobility coupled with secure stability
- Clean handling of the gas spring components
- High user comfort

The mobile work bench 2480.00.50.20.1 is equipped with a 40 mm thick Trovidur work surface ①. The surface is hard-wearing and very easy to keep clean.

The height adjustable chassis with 4 castors ② allows for high mobility and provides secure stability for the service station. The chassis is easily moved up and down by way of an excenter lever ③ located on the left of the unit.

At the right of the unit, a loading receptacle with a locking clip ④ is located for 200 bar bottles.

A removable oil sump with a grate in the upper drawer ⑤ will ensure clean handling of the internal gas spring components.

The energy panel ⑥ offers great user comfort because of its integrated operating elements, like the compressed air connection, light switch and 3 x 230 V electric outlet.

The removable lighting unit 2480.00.50.20.2 is height adjustable to cater to the individual requirements of the user.

Technical data:

2480.00.50.20.1 Work bench, mobile:

Work surface, Tovidur (mm) 1250 x 700 x 40
Work bench chassis made from profile steel tubing (mm) 45 x 45 x 2
Parallel vices, jaw width = 100 mm

2480.00.50.20.2 Lighting unit, removable:

Elongated light (w = 1200 mm) with connection cable and plug
2 x 45 W, strip louvre with reflector
Electronic ballast
Protection type IP20

Connections

Input:

Central supply line on the right side of the cabinet (bottom rear) with electric supply line (protected energy supply plug)

1/4" internal thread for air infeed

Energy panel:

1 x 1/4" internal thread for air connection

1 x On/OFF switch for air supply, rotary switch for Nitrogen Compact Booster

3 x 230 V socket (with hinged lid)

1 x ON/OFF switch for power supply, rotary switch

Accessory:

For optimised utilisation of the nitrogen bottle fill amount, a Compact Booster 2480.00.32.71 and a hose line DN4, 3 m 2480.00.32.71.05.03 can be integrated in specifically provided receiving braces in the cabinet ⑦. The two free drawers ⑧ offer additional space for specialist tool sets 2480.00.50.11 for the repair of gas springs.

subject to alterations

Hose press, pneumatic
Hose shears

2480.00.54.10

Hose press, pneumatic
for hose sizes DN2 and DN5



Description:

The FIBRO hose press, pneumatical 2480.00.54.10 is suited for pressing the following hose connection systems:

2480.00.23.	Minimess-system
2480.00.25.	24°-conus-system
2480.00.27.01.	Connector system, 24° conus micro

The pneumatic-hydraulic hose press drive enables simple and fast hose harnessing.

After connecting compressed air (max. 7 bar) on the G1/4“ threaded fitting, the hose press is operated manually with the air-hydraulic pump (0.1 - 0.5 l/min. at 7 bar air pressure).

Technical data:

Crimp force	750 / 75 kN/t
max. Crimp range	52 mm
Opening	+10 mm
Opening without press clamps	52 mm
Press clamps (included in the delivery scope)	2480.00.54.10.02 (DN2)
	2480.00.54.10.05 (DN5)
Drive	Pneumatic
Oil	1,4 liters
Length x width x height	230 x 180 x 160
Weight	16 kg

Lubricant-free
Sheetmetal glide pads on the press tool:
- improved performance due to reduced friction
- no press tool wear and no contamination from lubricants, 20% reduction in friction loss

2480.00.54.03

Hose shears



The following press fixtures and hoses can be ordered:

for the Minimess-system

2480.00.23.00.	Hose 630 bar dimpled, DN2 *
2480.00.23.01.V	Threaded connection, straight, packed, DN2 - 1215
2480.00.23.02.V	Threaded connection, 90°, packed, DN2 - 1215

for the 24°-conus-system

2489.00.02.	High-pressure hose, dimpled, DN5 *
2480.00.25.01	Hose fitting, straight
2480.00.25.02	Hose fitting, 90°
2480.00.25.04	Hose fitting, 45°

for the connector system, 24° conus micro

2480.00.23.00.	Hose 630 bar dimpled, DN2 *
2480.00.27.01.V	Threaded connection, straight, packed

* Hose lenghts in 1 m steps, ordered,
e.g. Ordering example hose DN2, 10 m lenghts
= 2480.00.23.00.0010



Application examples

Application examples

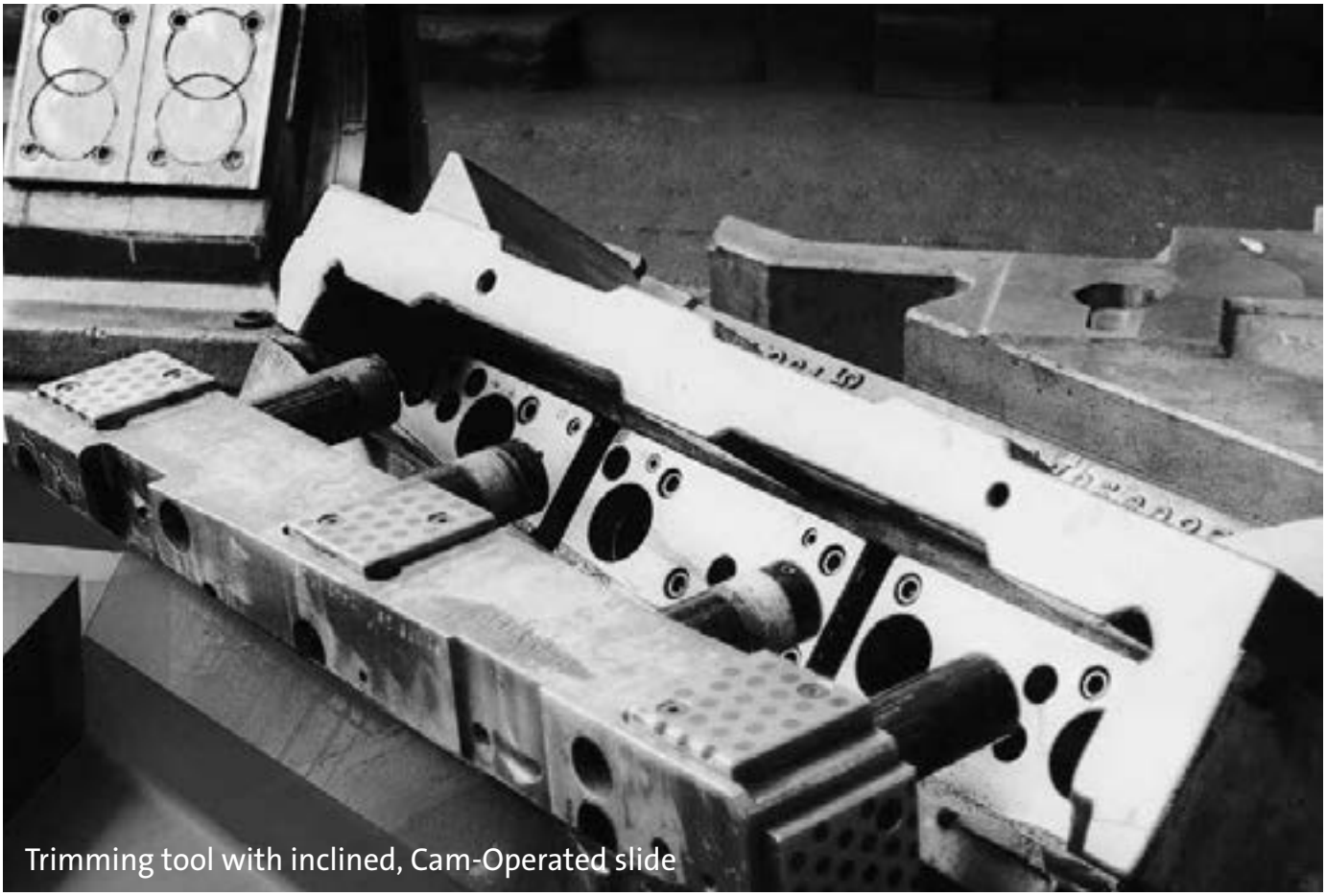

Trimming tool with inclined, Cam-Operated slide

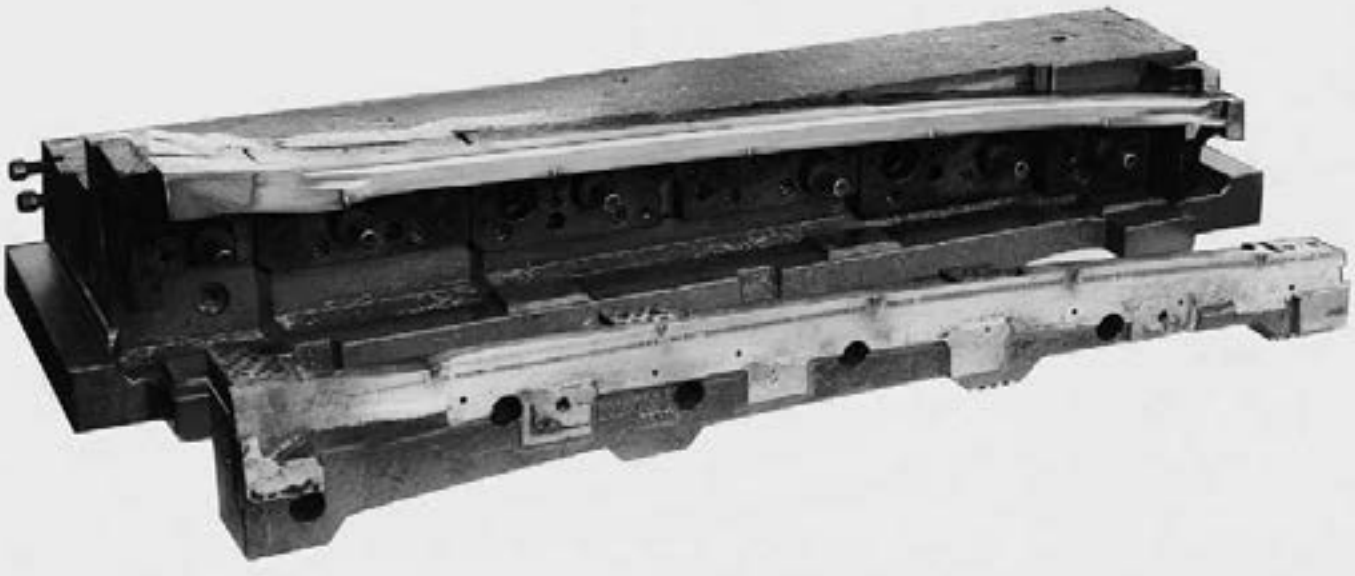

Drawing slide of large forming tool

Application examples

Trimming tool with inclined cam slide

Nitrogen die cylinders in the top ensure the positive centering of the trimming slide on the centering cones in the bottom tool section.

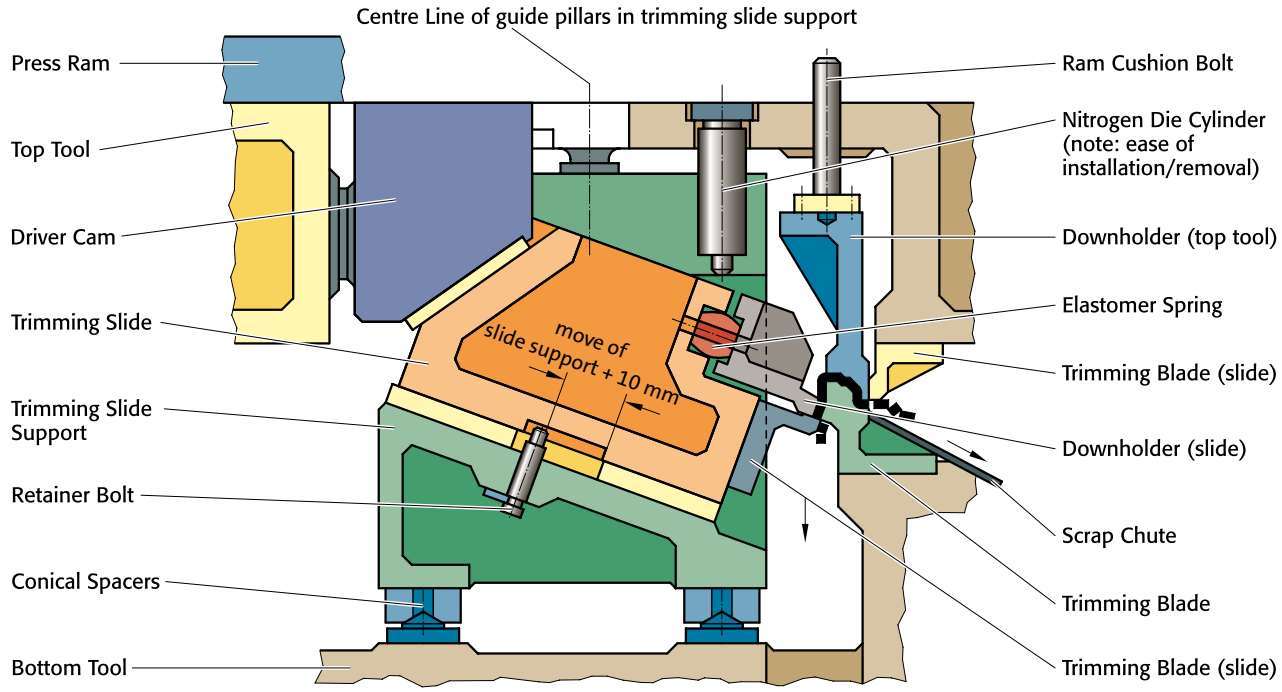

Drawing tool

The nitrogen die cylinder for the drawing slide is easily placed into position; the safety lid secures it.
Very high forces are required in this tool for the draw pad in the slide.
The nitrogen die cylinders in the top tool serve as boosters for the insufficient ram cushion.

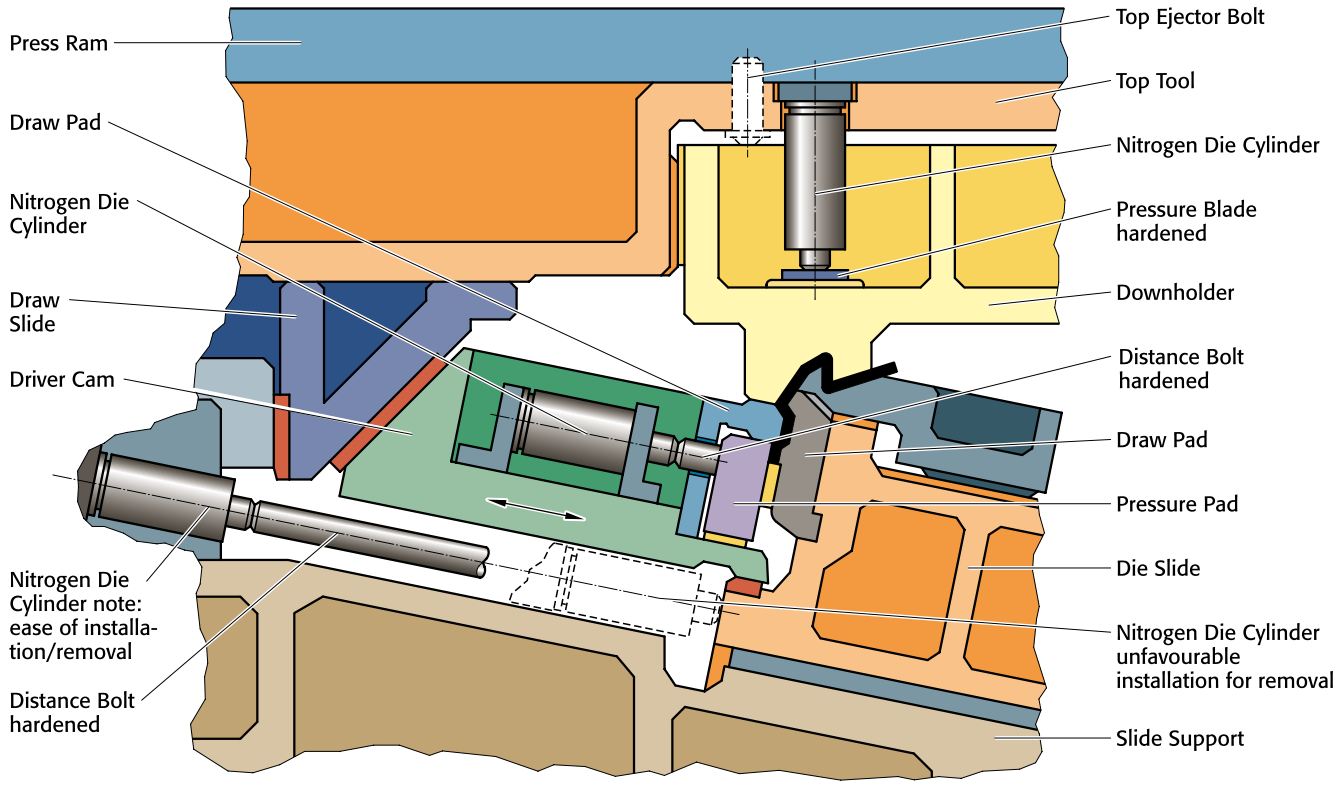

FIBRO

Application examples

Flanging tool with nitrogen die cylinders

Where bottom ejection facilities are lacking, FIBRO Nitrogen die cylinders will provide reliable actuation of piece part ejectors.

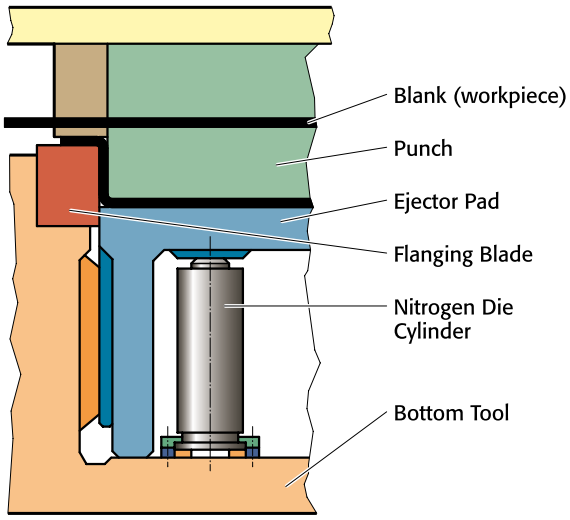

Flanging tool with ring stripper

The ring stripper is actuated by nitrogen die cylinders.

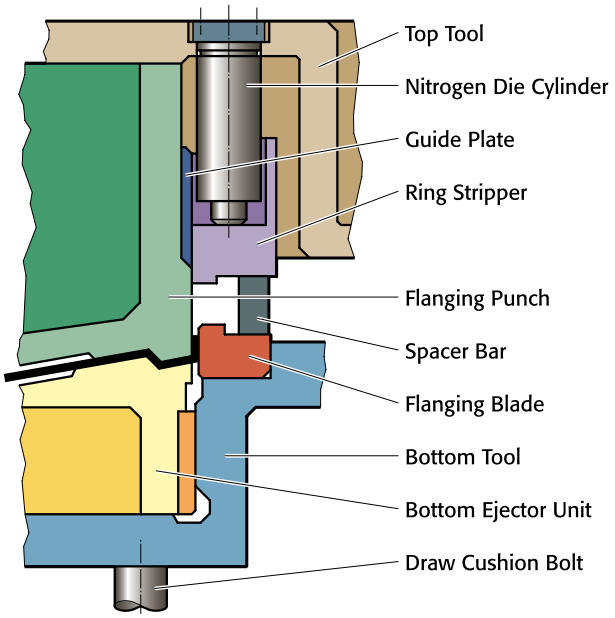

Double-Acting drawing tool

In order to obtain shorter setting times, only the downholder is boltet to the ram cushion. The drawing punch is raised through f + 20 mm by nitrogen die cylinders.

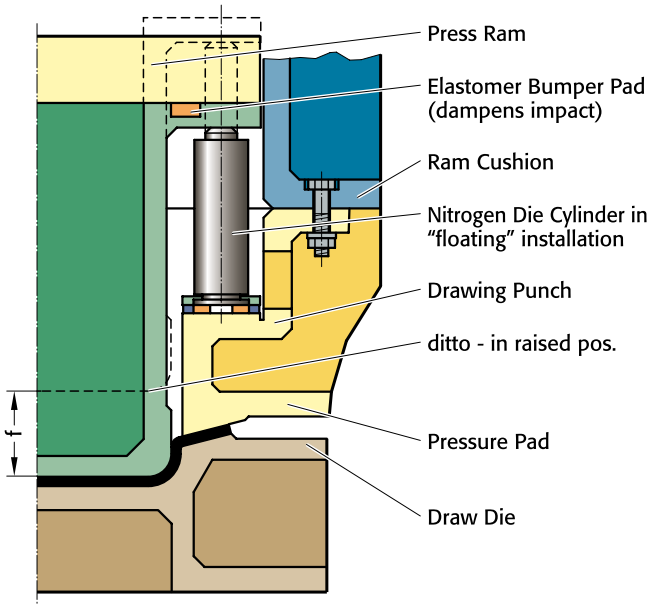

Blanking and piercing tool

The application of nitrogen die cylinders instead of the usual elastomer bumpers results in a significant reduction of setting time. Moreover, injuries caused by "fly-out" elastomer bumpers are eliminated.

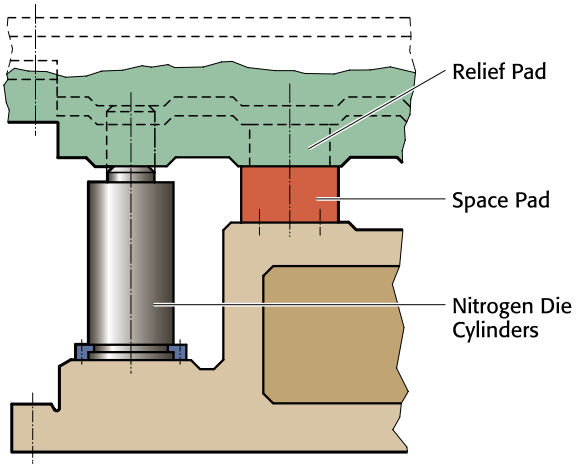

subject to alterations

Application examples

Retraction of piercing slide by nitrogen die cylinder

Die cylinder is mounted to bottom tool. It retracts the slide after completention of the piercing operation.
We recommend a “soft”-start on the cam shape in order to reduce impact and accerleration on the die cylinder.

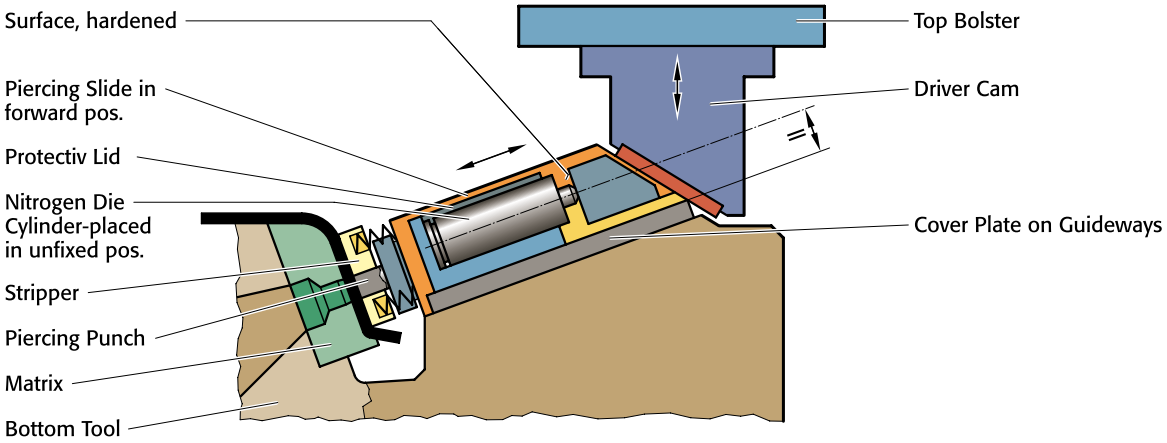

Drawing slide

In order to prevent wrinkling, this tool requires high forces on the downholder and pressure pad.
An elegant solution was achieved with nitrogen die cylinders. Ease of cylinder installation was ensured.

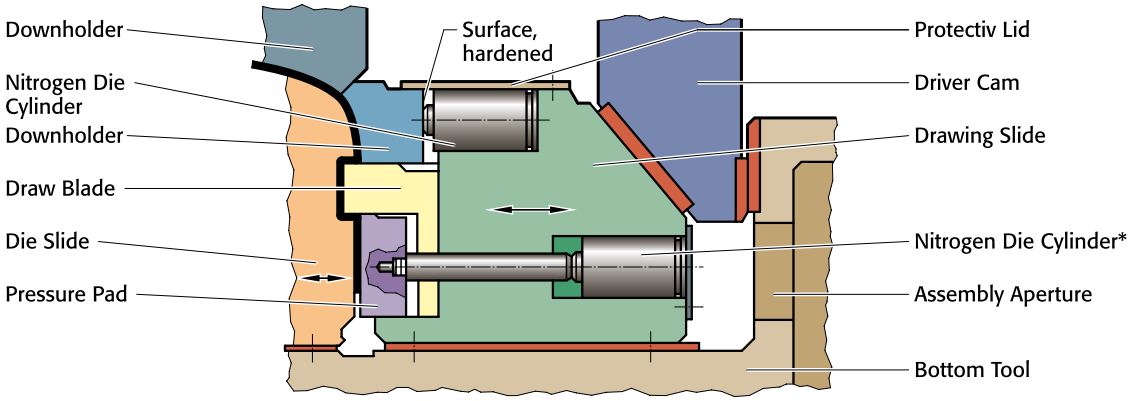

*Must be secured with special flange.

Drawing tool

The pressure pad is actuated by nitrogen die cylinders during the final 20 mm of the draw.

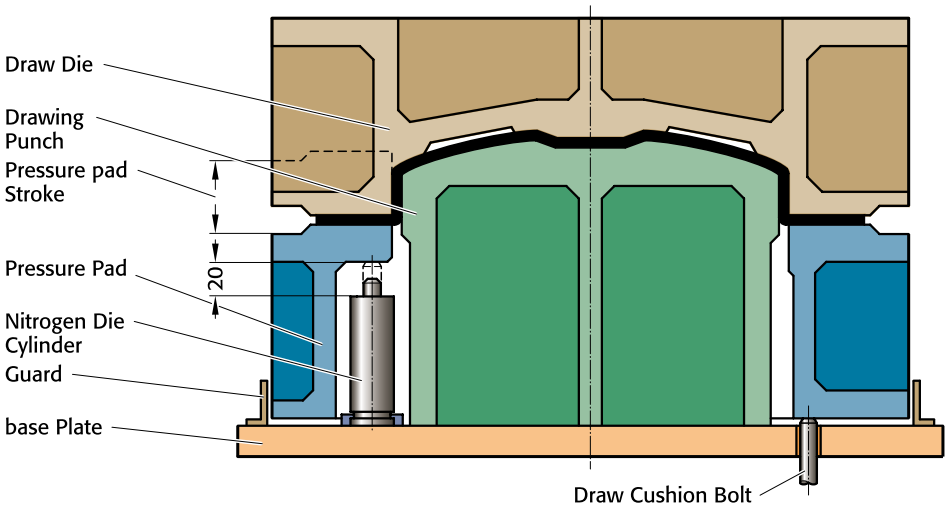

Application examples

Detail of progression compound tool

The clamping stripper is actuated by two nitrogen die cylinders 2480.12.01500.025. The units provide an initial cylinder force of 15 kN each and a stroke capacity of 25 mm – of which 20 mm are utilized.

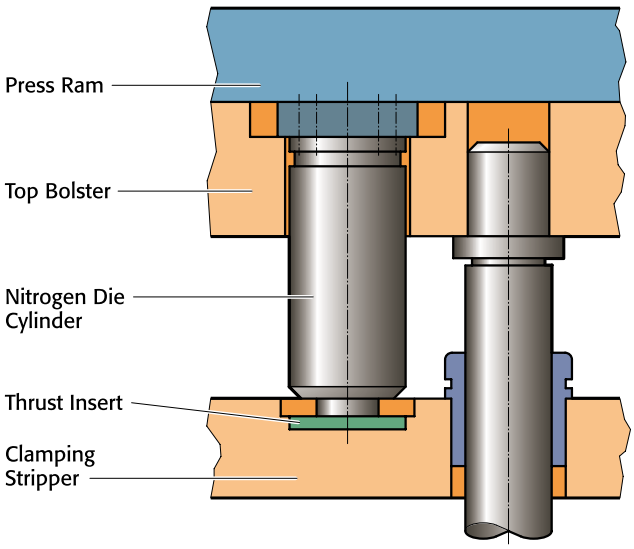

Drawing tool

Intended for use in a 100 ton hydraulic press, with one nitrogen die cylinder 2480.12.03000.025 mounted in the drawing punch.

In this application the die cylinder serves to accomplish the initial pre-draw of the internal shape, as well as for finish the draw over the draw ring – after the bottoming pressure of 30 kN has been reached.

The nitrogen die cylinder has an initial cylinder force of 30 kN, a stroke capacity of 25 mm – of which 19,5 mm are utilized in operation. Stroking speed is 4 SPM.

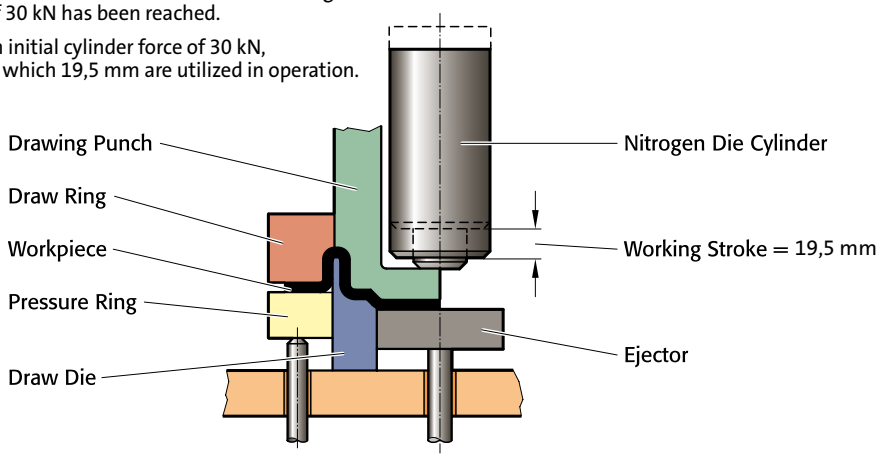

Bending tool for round bars

This tool employs two nitrogen die cylinders 2480.13.00750.080 for actuating the downholder. Press stroke is 92 mm. The stroke of the downholder is approx. 66 mm.

Because of manual loading, press strokes vary from 36 to 40 SPM. Part ejection is automatic. The nitrogen die cylinders provide an initial force of 7,5 kN each, and a stroke capacity of 80 mm.

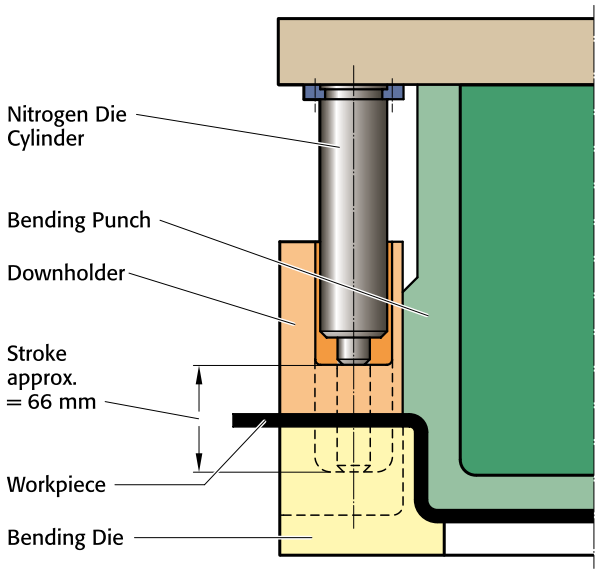

subject to alterations

Application examples

Bottom ejector in progression compound tool

Two nitrogen die cylinders 2480.13.00750.025 are used, providing an initial force of 7,5 kN each, and a stroke capacity of 25 mm.

The actual working stroke is 10 mm. The tool is run at a speed of 150 SPM, with a ram stroke of 48 mm.

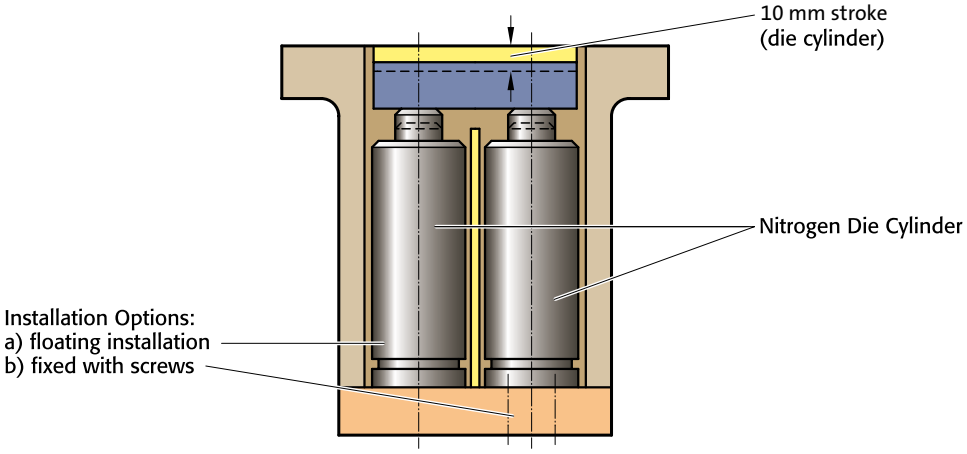

Drawing- and piercing tool

This tool is used in a 100 ton hydraulic press.

The nitrogen die cylinder is a 2480.13.03000.080, with a charge pressure of 130 bar – giving an initial cylinder force of 26 kN.
Stroke capacity is 80 mm. The actual working stroke is 76 mm.
The press is run at 14 SPM.

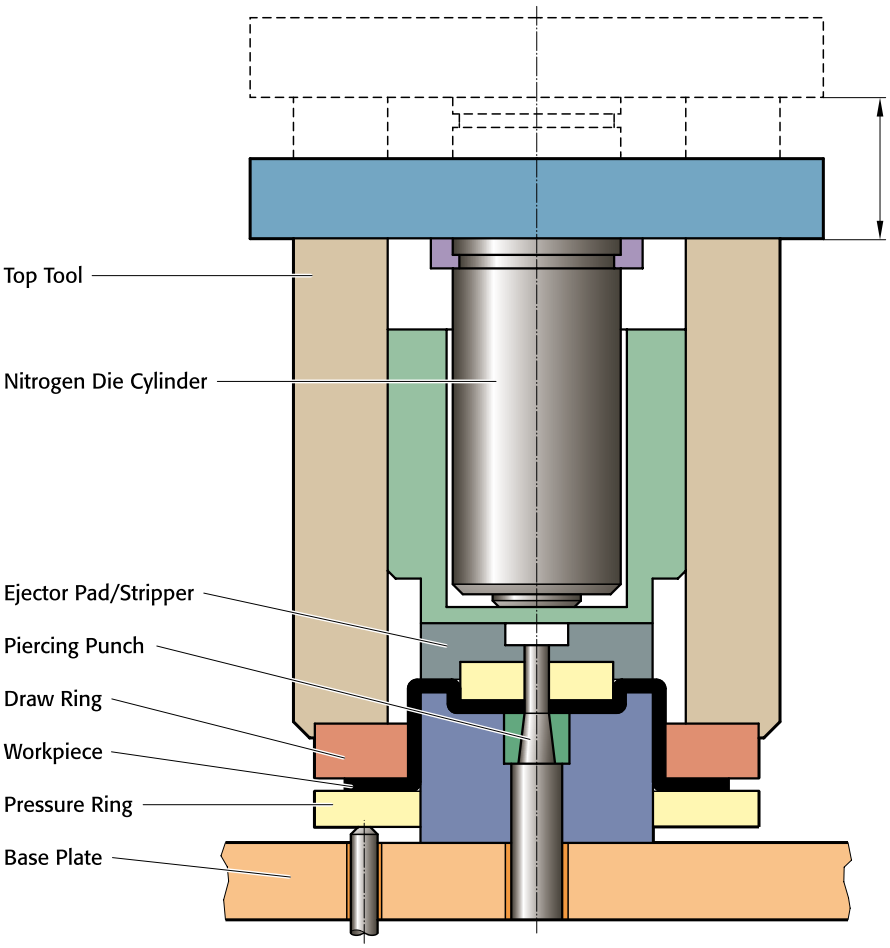

FIBRO

Application example of gas springs

Gas springs facilitate tools storage and tools preparation for production

Gas springs find increasing use in large press tools - in the sole role of aiding theier storage and production preparation.

The springs are bolted to either the upper or lower bolsters. They are activated only when the tool is being taken out of the press.

Application examples 1 and 2 show that special spacer caps are inserted prior to the tool being let down onto the gas springs – this being done whilst still in the press. During removal from the press and subsequent storage, the springs will keep the top tool elevated.

Storage stop pins are provided next to the springs; when tools are stacked one on top of the other, the increasing mass will force the springs to recade – and the tops will eventually abut against the storage pins. Once the stack is removed, the springs take over adain and push the top tool up.

Upon being prepared for production, the springs facilitate access to the tool. Once back in the press, the spacer caps are removed and the storage springs remain inactive during the production run.

It is recommended to affix warning signs to the tools in a prominent position: the presence of gas springs in the tool often cannot be seen from the outside.

Example 1: Gas Spring fixed to bottom bolster

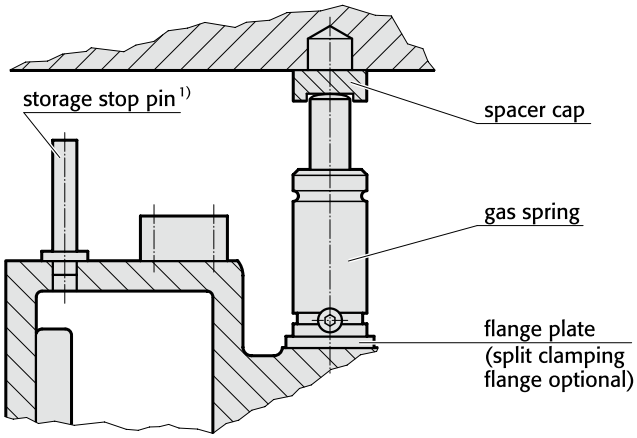

Example 2: Gas Spring fixed to top tool

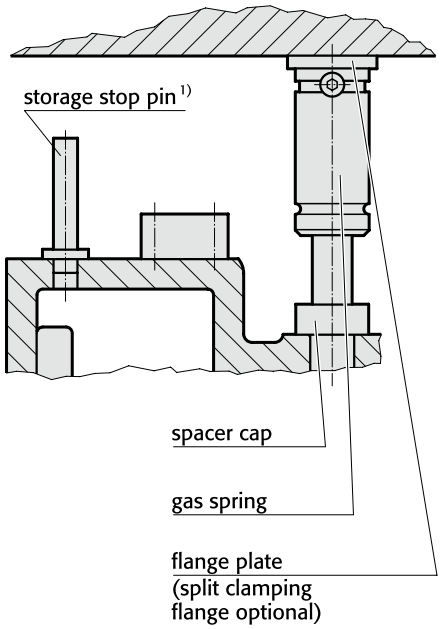

Example 3: Gas Spring fixed to bottom bolster

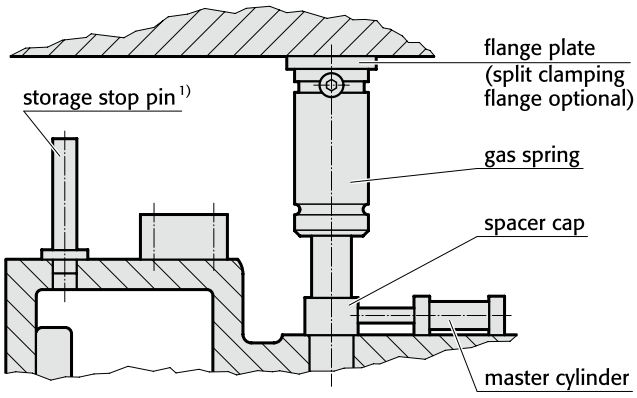

1) storage stop pins are reversible - they are turned round and pushed down into their holes during getting the tool ready for production

A Die Sets

B Precision Ground Plates and Flat Bars

C Lifting and Clamping Devices

D Guide elements

E Ground Precision Components

F Springs

G Elastomer-Bars, -Sheets, -Sections

FIBROFLEX® and FIBROELAST®-sheets and -profiles

H FIBRO Chemical Tooling Aids

J Peripheral Equipment

K Cam Units

L Standard Parts for Mould Making

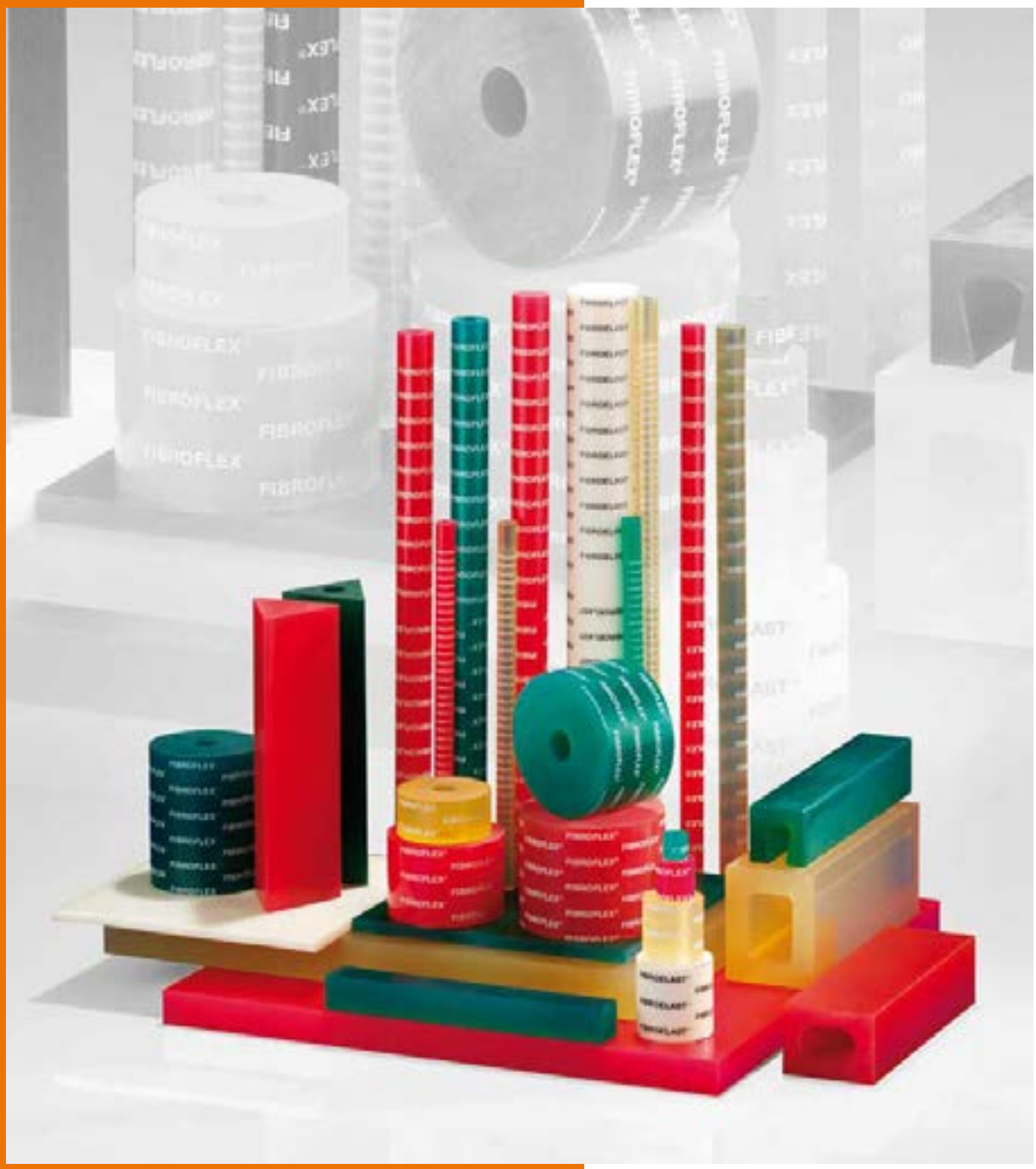

Elastomer

FIBROFLEX® Forming elastomers

The occurence of small batch lots in the press shop generally makes the more expensive dies of conventional design unadvisable – and it is in this sector in particular that FIBROFLEX® Forming elastomers can offer economical alternatives.

Over many years in the past, rubber was used for metal forming work, mostly with indifferent results because of insufficient mechanical resilience and susceptibility to damage by workshop lubricants.

FIBROFLEX®, a polyurethane elastomer of very special properties, represents a synthetic material of significant advantages over all coventional rubber substances. It provides:

- highest resistance to rupturing
- outstanding elastic properties
- extensive life span when used correctly
- good thermal resilience
- inertness to all lubricants used in metal forming operations.

To the designer of forming- and shearing dies, FIBROFLEX® offers highly attractive solutions to many a tooling problem – as for instance the completion in one operation of intricate return flanges etc. Special mention ought to be made here of the specific suitability this elastomer exhibits in the forming of delicate surface-coated or surface-refined sheet metal.

The quite outstanding elastic properties of FIBROFLEX® have made it an almost indispensable material in toolrooms everywhere and also in many sectors of general engineering. Its numerous successful uses comprise bumper stops, strippers, ejector- and forming pads, spring elements as well as noise supression applications.

FIBROFLEX® Forming elastomers, available in three shore hardnesses to suit different conditions, are supplied in a comprehensive range of sections hollow and solid, also in sheet form of many dimensions.

Intended as suggestions for the solution of forming problems, a number of illustrated application examples are contained in this catalogue. Further detailled information on elastomer tooling can be found in our free publication “Elastomers in sheet metal forming and the toolroom”, which we shall gladly mail to interested customers.



FIBROFLEX*

accurate parts to customers specifications

*Polyurethan

FIBRO

Contents

FIBROFLEX® - Technical data G8-9

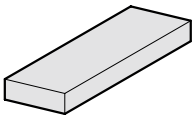
251. FIBROFLEX®-Plate G10

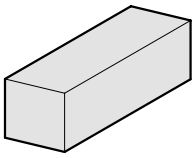
252. FIBROFLEX®-Square rod G11

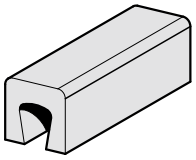
250. FIBROFLEX®-U-Profil rod G12

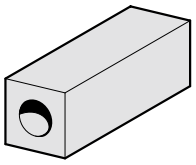
255. FIBROFLEX®-Hollow Square rod G13

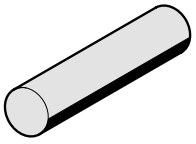
253. FIBROFLEX®-Round rod G14

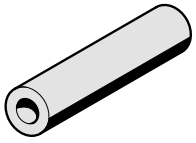
254. FIBROFLEX®-Hollow round rod G15

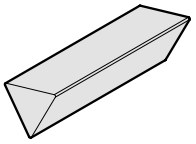
256. FIBROFLEX®-Triangular rod (60°) G16

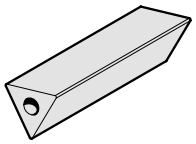
257. FIBROFLEX®-Hollow triangular rod (60°) G17

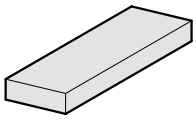
2511.3. FIBROELAST®-Plate G18

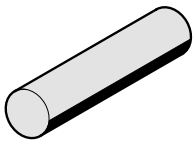
2531.4. FIBROELAST®-Round rod G19

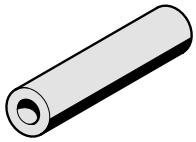
2541.4. FIBROELAST®-Hollow round rod G20

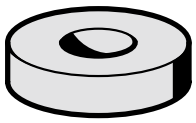
2450. Shock absorbing washer G21

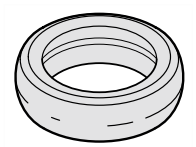
2450.10A. Damper, light-duty G22

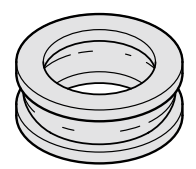
2450.11B. Damper, light-duty G23

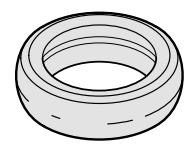
2450.20□. Damper, heavy-duty G24-25

Contents

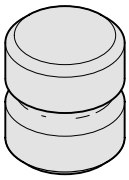

2451.10D. G26

Damper stopper

G27-29

FIBROFLEX® - Blanking, forming and embossing tools - Application examples

G31-37

Blanking and forming with FIBROFLEX®-Elastomers

FIBRO

Technical data on FIBROFLEX® Forming elastomer

Physical properties:

FIBROFLEX®-Type		DIN	5	6	7
Shore-A-Hardness	Shore A	53505	80	90	95
Density Density	[g/cm³]	53479	1,07	1,11	1,13
Working temperature, max.	[°C]		-40 bis +70	-40 bis +70	-40 bis +70
Rebound elasticity	[%]	53512	63	45	38
Tensile stress					
At 100% elongation	[MPa]	53504	4,1	6,8	11,8
At 300% elongation	[MPa]	53504	8	15,2	30
Tensile strength	[N/mm²]	53504	36	38	49
Elongation at fracture	[%]	53504	450	400	360
Tear strength	[N/mm]	53515	21	29	50
Abrasion resistance	[mm³]	53516	70	50	41
Compressive Set					
70h/24°C	[%]	53517	21	26	30
Resistance to Sea Water (saline)			approximately 6 months		

Guide lines for the machining of FIBROFLEX®:

FIBROFLEX® Forming elastomers can be machined on ordinary machine tools and with conventional cutters.

A keen cutting edge is mandatory.

FIBROFLEX® Type	5	6	7
Identification colour	green	yellow	red
Shore-A-Hardness	80	90	95
Sawing Circular saw, carbide-tipped, coarse toothed Rake angle 25°–30° Clearance angle 12°–15°	vc= approx. 1600 m/min.		
Drilling	vc= approx. 30 m/min.		
Turning Rake angle 25° Clearance angle 12°–15°	v_c= approx. 140 m/min.		
Milling Rake angle 25° Clearance angle 12°– 15°	v_c= approx. 100 m/min.		

v_c = cutting speed

Please note that we can supply form parts, required in larger quantities, in the ready-cast condition. Enquiries are invited.

Technical data on FIBROFLEX® Forming elastomers

Temperature resistance

FIBROFLEX® can be used safely at temperatures up to +70°C.

FIBROFLEX® will retain most of its flexibility at temperatures as low as -62°C. A gradual increase in rigidity sets in below -18°C.

Resistance to thermal shock is excellent.

Resistance to oxygen and ozone:

No traceable influences are incurred at normal atmospheric concentrations.

Resistance to aging:

Aging shows no discernable effects in conditions of normal ambient temperatures and generally constant environmental surroundings.

Water resistance:

FIBROFLEX® exhibits outstanding long-term stability under exposure to water of up to +50°C. Swelling and/or destructive influences remain absent.

This typical resistance against hydrolysis is characteristic for the specific molecular structure of the elastomer. Water-Oil emulsions present no problems either.

These are clear advantages of FIBROFLEX® over other polyurethane elastomer structures.

Resistance to oil, chemicals, and solvents

FIBROFLEX® is presenting an excellent resistance to oil and solvents and is, particularly, suiting applications in connection with lubricating oil and fuel.

Typical data of chemical resistance are shown in the following table.

Table No 1 – Resistance to some Chemicals

Diesel Fuel	O
Mineral Fats, acc. to additives	+ to –
Vegetabilic Fats	+
Animal Fats	+
Petrol (free of alcohols)	O
Mineral Oils – depending on additives	+
Paraffin	+ to –
Rape Seed Oil	+
Lubrificants on Mineral Oil Basis	O
Soap Emulsions	–
Vaseline	+
Water at +95 °C	–
Water at +20 °C	+ to O

\+ resistant = can be used

O conditionally resistant = conditional use

– not resistant = not recommended

Please note that blended oils and fats may have detrimental influence due to their various additives. In order to eliminate any risk, it is recommended ot test the elastomer under exposure to any specific oily and/or fatty substance. Such tests ought to be run for several weeks.

FIBROFLEX®-Plate

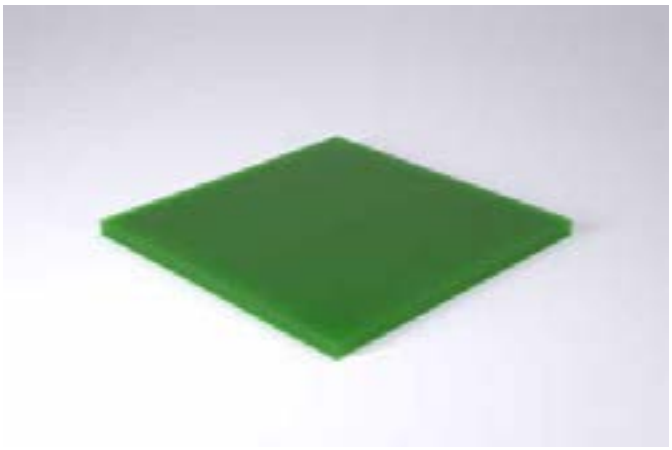

251.

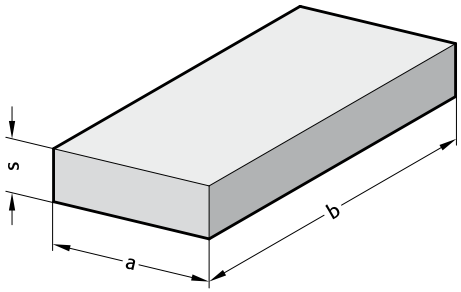

Execution:

FIBROFLEX® is available in 3 Shore hardnesses:
.5.=80 Shore A = colour: Green
.6.=90 Shore A = colour: Yellow
.7.=95 Shore A = colour: Red
Further technical data at the beginning of Chapter G.

Ordering Code (example):

FIBROFLEX®-Plate		=251.	
Spring rate MAT	80 Shore A	=	5.
Thickness s	15 mm	=	015.
Length a	250 mm	=	0250.
Width b	250 mm	=	0250
Order No		=251.	5.015. 0250. 0250

251. FIBROFLEX®-Plate

s	a x b 250 x 250	a x b 250 x 500	a x b 500 x 500	a x b 500 x 1000	a x b 1000 x 1000
1	●	●	●	●	
2	●	●	●	●	
3	●	●	●	●	
4	●	●	●	●	
5	●	●	●	●	
6	●	●	●	●	
7	●	●	●	●	
8	●	●	●	●	●
10	●	●	●	●	●
12	●	●	●	●	●
15	●	●	●	●	●
20	●	●	●	●	●
25	●	●	●	●	●
30	●	●	●	●	●
40	●	●	●	●	●
50	●	●	●	●	●
60	●	●	●	●	
70	●	●	●	●	
80	●	●	●	●	

subject to alterations

FIBROFLEX®-Square rod

252.

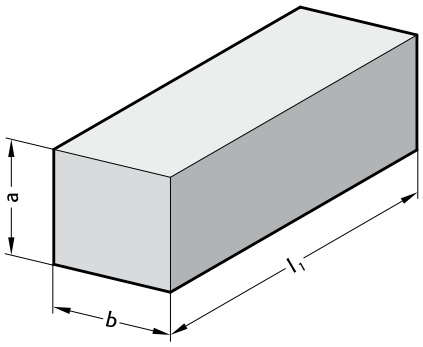

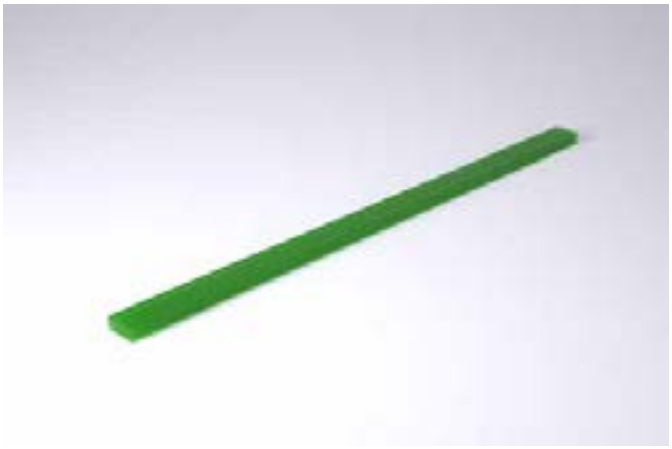

Execution:

FIBROFLEX® is available in 3 Shore hardnesses:
.5.=80 Shore A = colour: Green
.6.=90 Shore A = colour: Yellow
.7.=95 Shore A = colour: Red
Further technical data at the beginning of Chapter G.

Note:

1) Dimension b machined

Ordering Code (example):

FIBROFLEX®-Square rod			=252.
Spring rate MAT	80 Shore A	=	5.
Height a	20 mm	=	020.
Width b	50 mm	=	050.
Length l_1	1000 mm	=	1000
Order No			=252.5.020. 050. 1000

252. FIBROFLEX®-Square rod

a	b		l_1 250	500	1000	a	b		l_1 250	500	1000
8	8	1)			●	22	22		●	●	●
8	15	1)			●	25	25	1)			●
8	25	1)			●	25	40	1)			●
8	50	1)			●	25	60	1)			●
10	10	1)			●	25	80	1)			●
10	15	1)			●	30	30		●	●	●
10	25	1)			●	40	40	1)			●
10	50	1)			●	40	60		●	●	●
12	12	1)			●	45	45		●	●	●
12	20	1)			●	50	50		●	●	●
12	30	1)			●	50	180		●	●	●
12	50	1)			●	60	60		●	●	●
15	15		●	●	●	60	80		●	●	●
15	25	1)			●	80	80		●	●	●
15	40	1)			●	80	100		●	●	●
15	50	1)			●	100	100		●	●	●
20	20	1)			●	100	125		●	●	●
20	30	1)			●	100	180		●	●	●
20	40	1)			●	125	125		●	●	●
20	50	1)			●						

FIBROFLEX®-U-Profil rod



250.

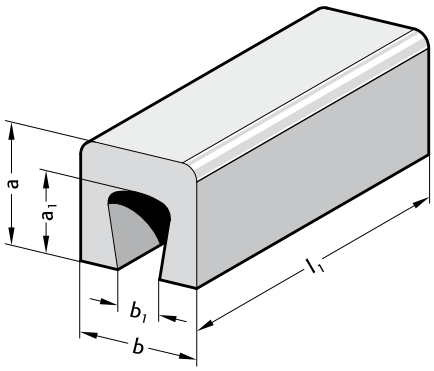

Execution:

FIBROFLEX® is available in 3 Shore hardnesses:
.5.=80 Shore A = colour: Green
.6.=90 Shore A = colour: Yellow
.7.=95 Shore A = colour: Red
Further technical data at the beginning of Chapter G.

Ordering Code (example):

FIBROFLEX®-U-Profil rod		=250.	
Spring rate MAT	80 Shore A	=	5.
Height a	75 mm	=	075.
Width b	100 mm	=	100.
Length l_1	250 mm	=	0250
Order No		=250.	5.075.100.0250

250. FIBROFLEX®-U-Profil rod

a	b	a_1	b_1	l_1	250	500
50	50	35	20		●	●
50	75	35	30		●	●
75	100	50	40		●	●
100	200	60	120		●	●

subject to alterations

FIBROFLEX®-Hollow square rod

255.

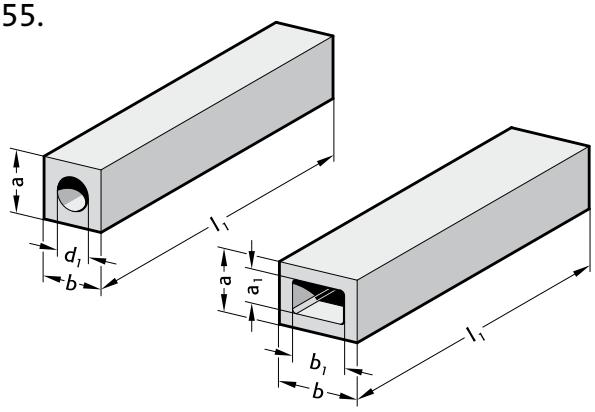



Execution:

FIBROFLEX® is available in 3 Shore hardnesses:
.5.=80 Shore A = colour: Green
.6.=90 Shore A = colour: Yellow
.7.=95 Shore A = colour: Red
Further technical data at the beginning of Chapter G.

Ordering Code (example):

FIBROFLEX®-Hollow square rod		=255.	
Spring rate MAT	80 Shore A	=	5.
Height a	80 mm	=	080.
Width b	80 mm	=	080.
Length l_1	250 mm	=	0250
Order No		=255.5.080. 080. 0250	

255. FIBROFLEX®-Hollow square rod

a	b	a_1	b_1	d_1	l_1	250	500	1000
40	60	20	35	-		●	●	●
45	45	-	-	20		●	●	●
50	50	-	-	25		●	●	●
50	180	20	120	-		●	●	●
60	60	-	-	30		●	●	●
60	80	30	50	-		●	●	●
80	80	-	-	40		●	●	●
80	100	40	60	-		●	●	●
100	100	50	50	-		●	●	●
100	125	50	70	-		●	●	●
100	180	50	123	-		●	●	●
125	125	75	75	-		●	●	●

FIBROFLEX®-Round rod



253.

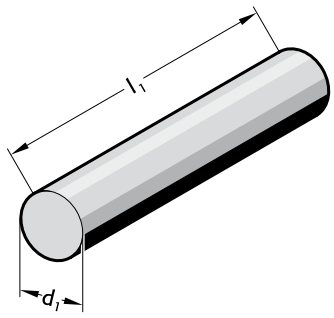

Execution:

FIBROFLEX® is available in 3 Shore hardnesses:
.5.=80 Shore A = colour: Green
.6.=90 Shore A = colour: Yellow
.7.=95 Shore A = colour: Red
Further technical data at the beginning of Chapter G.

Ordering Code (example):

FIBROFLEX®-Round rod			=253.
Spring rate MAT	80 Shore A	=	5.
External diameter d_1	3 mm	=	003
Order No			=253.5.003

253. FIBROFLEX®-Round rod

d_1	l_1 330	500	1000
2	●		
3			●
4			●
5			●
6			●
7			●
8			●
10			●
12			●
16	●		
20		●	
25		●	
32		●	
40		●	
50		●	
63		●	
80		●	
100		●	
125		●	
140		●	
150		●	
160		●	
180		●	
200		●	

subject to alterations

FIBROFLEX®-Hollow round rod

254.

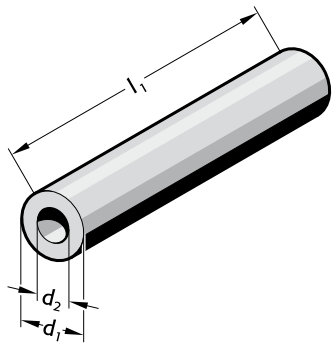



Execution:

FIBROFLEX® is available in 3 Shore hardnesses:
.5.=80 Shore A = colour: Green
.6.=90 Shore A = colour: Yellow
.7.=95 Shore A = colour: Red
Further technical data at the beginning of Chapter G.

Ordering Code (example):

FIBROFLEX®-Hollow round rod			=254.
Spring rate MAT	80 Shore A	=	5.
External diameter d_1	80 mm	=	080
Order No			=254. 5.080

254. FIBROFLEX®-Hollow round rod

d_1	d_2	l_1 330	500
16	6.5	●	
20	8.5		●
25	10.5		●
32	13.5		●
40	13.5		●
50	17		●
63	17		●
80	21		●
100	21		●
125	27		●
140	50		●
150	50		●
160	50		●
180	50		●
200	50		●

FIBROFLEX®-Triangular rod (60°)

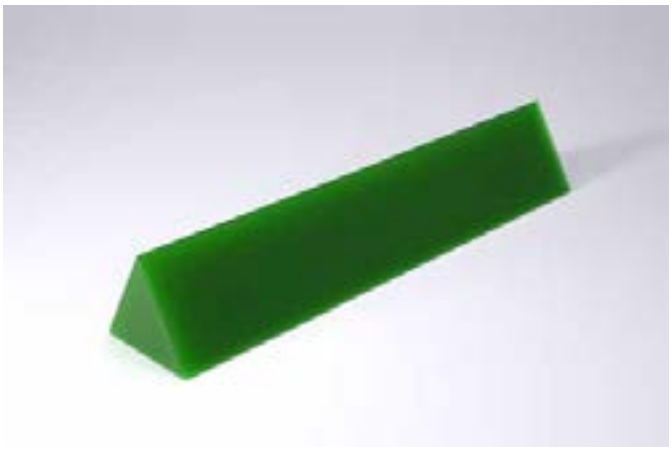

256.

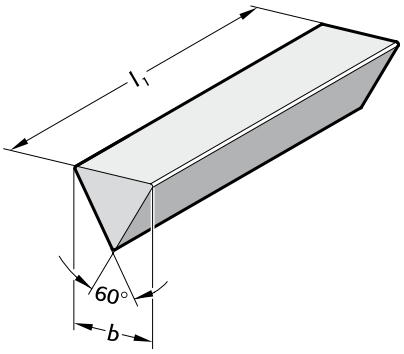

Execution:

FIBROFLEX® is available in 3 Shore hardnesses:
.5.=80 Shore A = colour: Green
.6.=90 Shore A = colour: Yellow
.7.=95 Shore A = colour: Red
Further technical data at the beginning of Chapter G.

Ordering Code (example):

FIBROFLEX®-Triangular rod (60°)		=256.	
Spring rate MAT	80 Shore A	=	5.
Edge length b	50 mm	=	050.
Length l_1	250 mm	=	0250
Order No		=256.	5.050. 0250

256. FIBROFLEX®-Triangular rod (60°)

b	l_1	250	500
35		●	●
50		●	●
80		●	●

subject to alterations

FIBROFLEX®-Hollow triangular rod (60°)

257.

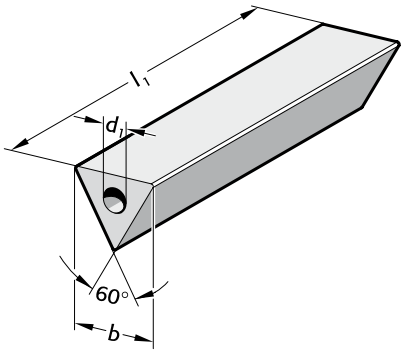



Execution:

FIBROFLEX® is available in 3 Shore hardnesses:
.5.=80 Shore A = colour: Green
.6.=90 Shore A = colour: Yellow
.7.=95 Shore A = colour: Red
Further technical data at the beginning of Chapter G.

Ordering Code (example):

FIBROFLEX®-Hollow triangular rod (60°)		=257.	
Spring rate MAT	80 Shore A	=	5.
Edge length b	50 mm	=	050.
Length l_1	250 mm	=	0250
Order No		=257.5.050. 0250	

257. FIBROFLEX®-Hollow triangular rod (60°)

b	d_1	l_1	250	500
35	8		●	●
50	12		●	●
80	20		●	●

FIBROELAST®-Plate



2511.3.

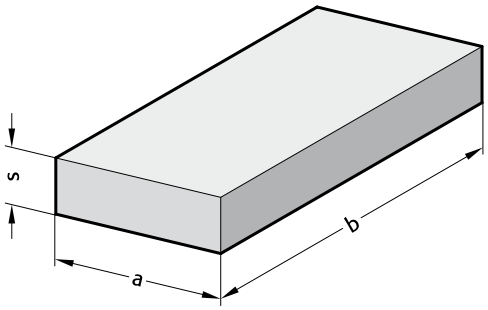

Material:
Polyester-based polyurethane
Hardness 65 Shore A

Colour:
white

Note:
Other plate thicknesses available upon request.

Physical properties:
Shore hardness A: 65
100% modulus of elasticity: 2,4 [N/mm²]
300% modulus of elasticity: 4,6 [N/mm²]
Tensile strength: 26 [N/mm²]
Elongation: 550 [%]
Tear resistance: 46 [kN/m]

Permanent set (70°C): 45 [%]
Rebound elasticity: 58 [%]
Maximum deformation: 40 [%]

Ordering Code (example):

FIBROELAST®-Plate		=2511.3.	
Thickness s	6 mm	=	006.
Width a	500 mm	=	0500.
Length b	500 mm	=	0500
Order No		=2511.3.	006. 0500. 0500

2511.3. FIBROELAST®-Plate

s	a x b 250 x 250	a x b 250 x 500	a x b 500 x 500	a x b 500 x 1000
1	●	●	●	●
2	●	●	●	●
3	●	●	●	●
4	●	●	●	●
5	●	●	●	●
6	●	●	●	●
7	●	●	●	●
8	●	●	●	●
10	●	●	●	●
12	●	●	●	●
15	●	●	●	●

subject to alterations

FIBROELAST®-Round rod

2531.4.

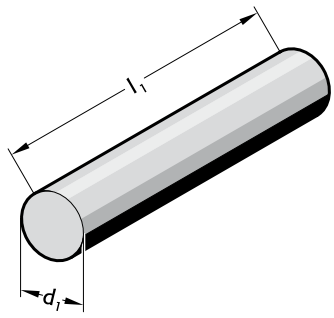



Material:
Polyester-based polyurethane
Hardness 70 Shore A

Colour:
white

Physical properties:
Shore hardness A: 70
100% modulus of elasticity: 3,0 [N/mm²]
300% modulus of elasticity: 6,0 [N/mm²]
Tensile strength: 28 [N/mm²]
Elongation: 500 [%]
Tear resistance: 58 [kN/m]
Permanent set (70°C): 45 [%]
Rebound elasticity: 55 [%]
Maximum deformation: 40 [%]

2531.4. FIBROELAST®-Round rod

Order No	d_1	l_1
2531.4.016	16	330
2531.4.020	20	500
2531.4.025	25	500
2531.4.032	32	500
2531.4.040	40	500
2531.4.050	50	500
2531.4.063	63	500
2531.4.080	80	500
2531.4.100	100	500
2531.4.125	125	500

FIBROELAST®-Hollow round rod



2541.4.

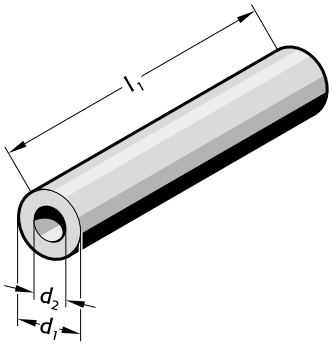

Material:
Polyester-based polyurethane
Hardness 70 Shore A

Colour:
white

Note:
FIBROELAST®-Hollow round rods can also be used as springs.

Physical properties:
Shore hardness A: 70
100% modulus of elasticity: 3,0 [N/mm²]
300% modulus of elasticity: 6,0 [N/mm²]
Tensile strength: 28 [N/mm²]
Elongation: 500 [%]
Tear resistance: 58 [kN/m]
Permanent set (70°C): 45 [%]
Rebound elasticity: 55 [%]
Maximum deformation: 40 [%]

2541.4. FIBROELAST®-Hollow round rod

Order No	d_1	d_2	l_1
2541.4.016	16	6.5	330
2541.4.020	20	8.5	500
2541.4.025	25	10.5	500
2541.4.032	32	13.5	500
2541.4.040	40	13.5	500
2541.4.050	50	17	500
2541.4.063	63	17	500
2541.4.080	80	21	500
2541.4.100	100	21	500
2541.4.125	125	27	500

subject to alterations

Shock absorbing washer

2450.

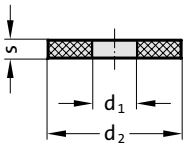

Mounting example

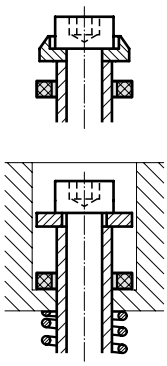



Material:
Polyurethan (FIBROFLEX®)

Execution:
2450.6. (90 Shore A) available from stock
2450.5. (80 Shore A) and
2450.7. (95 Shore A) available upon request

2450. Shock absorbing washer

d_1	d_2	s	d_1	d_2	s	d_1	d_2	s
6.4	16	3	17	38	5	26	50	6
8.5	20	3	17	50	6	27	41	7
10.5	15	4	17	63	6	27	125	10
10.5	25	4	18	27	4	31	42	6
11	17	3	18	32	7	32	40	6
12	24	5	21	30	5	32	49	8
13	19	4	21	35	7	32	60	10
13	25	4	21	38	6	37	46	6
13.5	32	4	21	80	10	37	53	8
13.5	40	5	21	100	10	37	65	10
14	23	4	22	28	6	42	70	10
14	26	5	23.5	34	4			
15.5	23	4	25	32	6			
17	26	4	26	35	6			

Ordering Code (example):

Shock absorbing washer		=2450.	
Shore A hardness MAT	80 Shore A	=	5.
Inside diameter d_1	23.5 mm	=	23.
External diameter d_2	34 mm	=	034.
Thickness s	4 mm	=	04
Order No		=2450.5.23.034.04	

Damper, light-duty



Mounting example

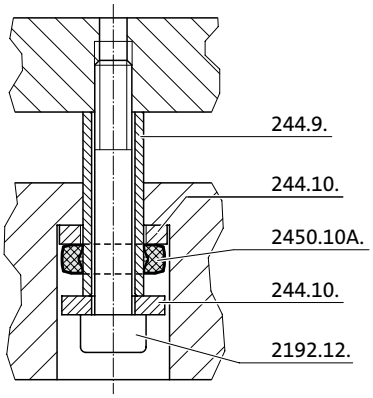

2450.10A.

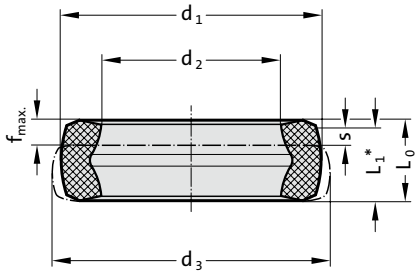

Description:

Dampers, light duty , made of co-polyester elastomer are found in the elevating units in progressive dies in the automotive and white goods industry. The increasing stresses on screws and bolts as well as noise emission are reduced by the light duty dampers.

Benefits:

- High absorption of force and energy
- Long service life and high level of operating safety
- Noise reduction
- High degree of effectiveness

Material:

Co-Polyester-Elastomer

Technical data:

Surroundings: Resistant to microbes, seawater, chemicals.
No absorption of water and no swelling.
Grease and oil resistant.
Approved temperature range: -40°C to +90°C (-40°F to +194°F)

Note:

Socket cap screw 2192.12. see Section C
Spacer tube 244.9. see Section F
Washer 244.10. see Section F

2450.10A. Damper, light-duty

Order No	d_1	d_2	d_3	L_0	L_1*	Stroke (s)	$F_{max.}$ in N	$f_{max.}$ in mm	W in Nm/stroke (s)**	W_h in Nm/h***	Socket cap screw
2450.10A.0236.0163.073	23.6	16.3	25.3	7.3	6.6	1.9	3000	2	3	7500	M10

*Dimension L_1 is the slump which must be taken into account for the design.
**W = Total energy per stroke
***W_h = Total energy per hour

Damper, light-duty

2450.11B.

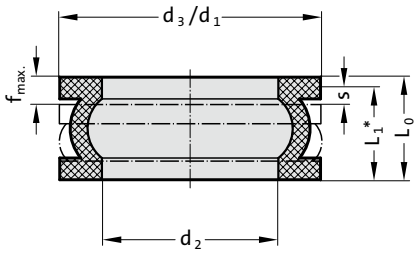

Mounting example

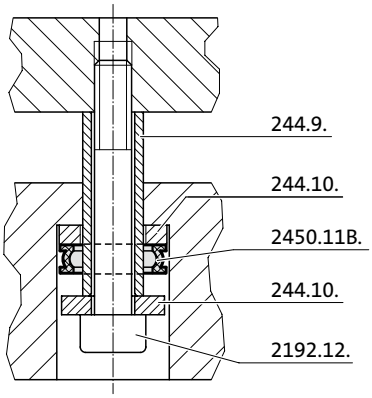



Description:

Dampers, light duty , made of co-polyester elastomer are found in the elevating units in progressive dies in the automotive and white goods industry. The increasing stresses on screws and bolts as well as noise emission are reduced by the light duty dampers.
The two-ply version of the flanged damper can also be used depending on the force or stroke without the use of an additional distance washer.

Benefits:

- High absorption of force and energy
- Long service life and high level of operating safety
- Noise reduction
- High degree of effectiveness

Material:

Co-Polyester-Elastomer

Technical data:

Surroundings: Resistant to microbes, seawater, chemicals.
No absorption of water and no swelling.
Grease and oil resistant.
Approved temperature range: -40°C to +90°C (-40°F to +194°F)

Note:

Socket cap screw 2192.12. see Section C
Spacer tube 244.9. see Section F
Washer 244.10. see Section F

2450.11B. Damper, light-duty

Order No	d_1	d_2	d_3	L_0	L_1*	Stroke (s)	$F_{max.}$ in N	$f_{max.}$ in mm	W in Nm/stroke (s)**	W_h in Nm/h***	Socket cap screw
2450.11B.0300.0203.118	30	20.3	30.2	11.8	10.7	2.7	5000	2.9	8.6	20000	M12

*Dimension L_1 is the slump which must be taken into account for the design.
**W = Total energy per stroke
***W_h = Total energy per hour

Damper, heavy-duty



Mounting example

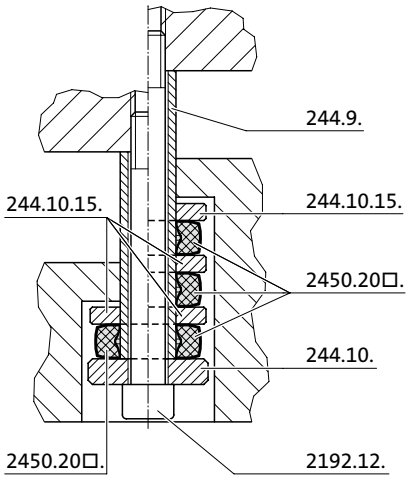

2450.20□.

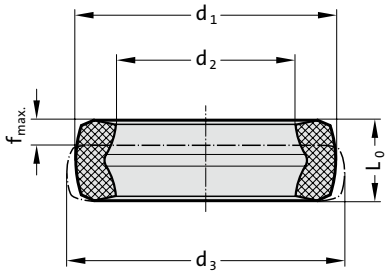

Description:

The co-polyester elastomer dampers, heavy-duty, are used as holddown dampers in the automotive and white goods industry. Increasing return stroke speeds and the related stresses on screws and bolts in moveable, suspended tool parts are absorbed by the hold-down dampers. Reduced noise emission is a further additional positive sideeffect.

Benefits:

- High absorption of force and energy
- Slight settlement
- Energy absorption between 5 Nm and 269 Nm
- Long service life and high level of operating safety
- Noise reduction
- High degree of effectiveness

Material:

Co-Polyester-Elastomer

Technical data:

Surroundings: Resistant to microbes, seawater, chemicals.
No absorption of water and no swelling.
Grease and oil resistant.
Approved temperature range: -40°C to +90°C (-40°F to +194°F)

Note:

Socket cap screw 2192.12. see Section C
Spacer tube 244.9. see Section F
Washer 244.10. see Section F

2450.20□. Damper, heavy-duty

Order No	d_1	d_2	d_3	L_0	$F_{max.}$ in N (static < 0,1)	$f_{max.}$ in mm	W in Nm/stroke (s)*	Socket cap screw
2450.20A.0264.0163.078	26.4	16.3	28.4	7.8	5500	2	5	M10
2450.20B.0321.0203.108	32.1	20.3	35.1	10.8	9000	4.4	14.2	M12
2450.20B.0458.0253.170	45.8	25.3	49.8	17	20000	4.9	44.6	M16
2450.20A.0546.0303.213	54.6	30.3	61.8	21.3	30000	7.6	81.9	M20
2450.20A.0618.0363.215	61.8	36.3	69.9	21.5	46000	8.2	126.5	M24
2450.20A.0785.0423.294	78.5	42.3	89	29.4	75000	11.4	269	M30

*Total energy per stroke

Damper, heavy-duty
Selection table multiple layering

Simple layering

Order No.	L_1*	$F_{1\,max}$ in N (dynamic>0,1)	W_1 in Nm/stroke (s)**	W_{h1} in Nm/h***	H_1 total height	socket cap screw
2450.20A.0264.0163.078	7.1	4100	3.5	9000	17.1	M10
2450.20B.0321.0203.108	9.8	6600	12	30000	23.8	M12
2450.20B.0458.0253.170	15.3	14500	19	45000	31.3	M16
2450.20A.0546.0303.213	19	22500	47	67000	39	M20
2450.20A.0618.0363.215	19.5	37500	76	114000	39.5	M24
2450.20A.0785.0423.294	27	46000	143	152000	50	M30

* Dimension „L_1“ is the slump which must be taken into account for the design.

** Total energy per stroke

*** Total energy per hour

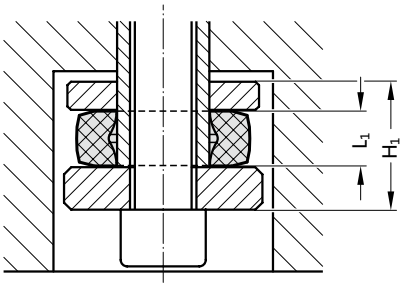

Double layering

Order No.	L_1*	$F_{2\,max}$ in N (dynamic>0,1)	W_2 in Nm/stroke (s)**	W_{h2} in Nm/h***	H_2 total height	socket cap screw
2450.20A.0546.0303.213	19	18000	78	107000	66	M20
2450.20A.0618.0363.215	19.5	35000	148	174000	67	M24
2450.20A.0785.0423.294	27	39000	233	272000	85	M30

* Dimension „L_1“ is the slump which must be taken into account for the design.

** Total energy per stroke

*** Total energy per hour

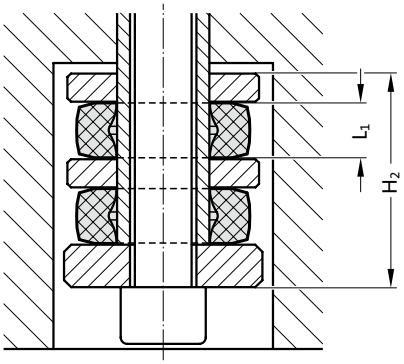

Threefold layering

Order No.	L_1*	$F_{3\,max}$ in N (dynamic>0,1)	W_3 in Nm/stroke (s)**	W_{h3} in Nm/h***	H_3 total height	socket cap screw
2450.20A.0546.0303.213	19	16000	100	127000	93	M20
2450.20A.0618.0363.215	19.5	28000	176	194000	94.5	M24
2450.20A.0785.0423.294	27	29000	255	281000	120	M30

* Dimension „L_1“ is the slump which must be taken into account for the design.

** Total energy per stroke

*** Total energy per hour

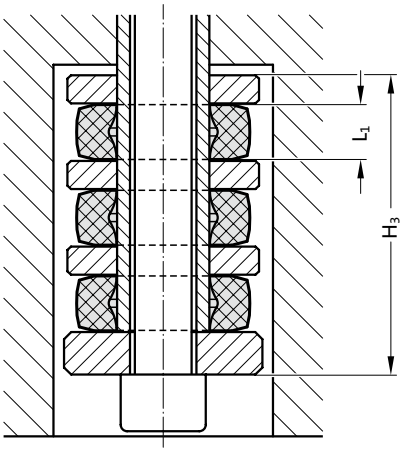

FIBRO

Damper stopper



Mounting example

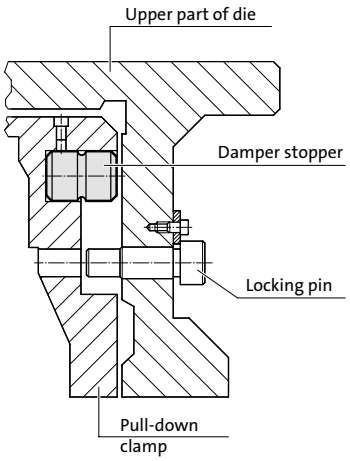

2451.10D.

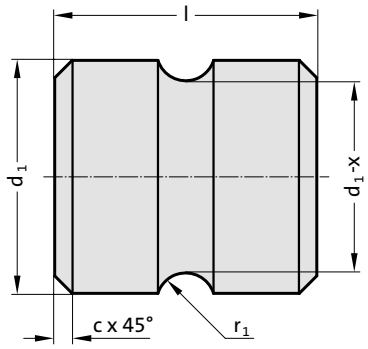

Description:

Damper stopper made of co-polyester elastomer dampen the recoil on the locking and unlocking pins in the manufacturing of jigs. Damper stoppers are used in the automotive and white goods industry. Damper stoppers sit inside the pull-down clamps and are radially stressed. The number and size depends on the weight and the velocity of the pull-down clamps.

Benefits:

- High absorption of force and energy
- Slight settlement
- UV protection
- Long service life and high level of operating safety
- Noise reduction
- High degree of eff ectiveness

Material:

Co-polyester elastomer, black

Technical data:

Surroundings: Resistant to microbes, seawater, chemicals.
No absorption of water and no swelling.
Grease and oil resistant.
Approved temperature range: -40°C to +90°C (-40°F to +194°F)

2451.10D. Damper stopper

Order No	Size	d_1	Cut-in depth d_1-x	Cut-in radius r_1	c	l
2451.10D.040.060	B	40	8	7	3	60
2451.10D.050.070	C	50	10	8	4	70
2451.10D.063.080	D	63	12	9	5	80
2451.10D.080.090	E	80	14	10	6	90

Number and size (B, C, D, E) of damper stoppers for cushioning

	Pull-down clamp speed m/s												
Pull-down clamp weight kg	0.1	0.2	0.3	0.4	0.5	0.6	0.7	0.8	0.9	1	1.1	1.2	1.3
100	3 x B	3 x B	3 x B	3 x B	3 x B	3 x B	3 x B	3 x B	3 x B	4 x B	4 x B	4 x B	4 x B
250	3 x B	3 x B	3 x B	3 x B	3 x B	4 x B	4 x B	4 x B	4 x B	4 x B	4 x B	4 x B	4 x B
500	4 x B	4 x B	4 x B	4 x B	4 x B	4 x B	4 x B	4 x B	4 x B	4 x B	4 x C	4 x C	4 x C
750	4 x B	4 x B	4 x B	4 x B	4 x B	4 x B	4 x C	4 x C	4 x C	4 x C	4 x C	4 x C	4 x C
1000	4 x C	4 x C	4 x C	4 x C	4 x C	4 x C	4 x C	4 x C	4 x C	4 x C	4 x C	4 x D	4 x D
1250	4 x C	4 x C	4 x C	4 x C	4 x C	4 x C	4 x C	4 x C	4 x D	4 x D	4 x D	4 x D	4 x D
1500	4 x C	4 x C	4 x C	4 x C	4 x C	4 x C	4 x D	4 x D	4 x D	4 x D	4 x D	4 x D	4 x E
1750	4 x C	4 x C	4 x C	4 x D	4 x D	4 x D	4 x D	4 x D	4 x D	4 x E	4 x E	4 x E	4 x E
2000	4 x D	4 x D	4 x D	4 x D	4 x D	4 x D	4 x D	4 x D	4 x D	4 x E	4 x E	4 x E	4 x E
2500	4 x D	4 x D	4 x D	4 x D	4 x D	4 x D	4 x E	4 x E	4 x E	4 x E	4 x E	6 x E	6 x E
3000	4 x D	4 x D	4 x D	4 x D	4 x E	4 x E	4 x E	4 x E	4 x E	4 x E	6 x E	6 x E	6 x E
3500	4 x D	4 x E	4 x E	4 x E	4 x E	4 x E	4 x E	4 x E	6 x E	6 x E	8 x E	8 x E	10 x E
4000	4 x E	4 x E	4 x E	4 x E	4 x E	6 x E	6 x E	6 x E	8 x E	8 x E	10 x E	10 x E	10 x E
4500	6 x E	6 x E	6 x E	6 x E	6 x E	8 x E	10 x E	10 x E	10 x E	10 x E	10 x E	10 x E	10 x E
5000	6 x E	6 x E	8 x E	8 x E	8 x E	10 x E	10 x E	10 x E	10 x E	---	---	---	---

subject to alterations

Recommendations for blanking, forming and embossing operations with FIBROFLEX® Elastomer

Blanking, forming and embossing with FIBROFLEX® Tooling elastomer holds quite particular attraction for small to medium batches where, in comparison with conventional tooling, time and cost can be saved in the toolroom.

Conventional dies always depend on the highly accurate relationship between punch and matrix. This does not apply to elastomer dies. Only one part – punch or matrix – will be required. The "opposite member" is provided by the elastomer cushion. This means that elastomer dies are usually made very quickly and therefore cost less. Moreover they afford great flexibility in regard of component modification at a later stage.

Whereas the foregoing considerations left the choice of an alternative solution, presswork with surface-coated or surface-refined material usually does not: with any operational blemishes firmly ruled out, more often than not the "soft touch" of a FIBROFLEX® die is the only answer.

FIBROFLEX® Blanking dies

In the actual working cycle of en elastomer blanking die, the ram force is initially absorbed by the resistance of the deforming elastomer cushion. As the limit of deformability is reached, shearing and stock breakaway must have taken place. As a general rule it can be stated that stock of high ductility has a detrimental effect on elastomer blanking. The brittler materials on the other hand, such as spring steels, lamination quality strip and certain aluminium alloys are blanked in elastomer dies on quite a large scale. Soft materials like deep drawing steel etc. are unsuitable for the process.

Steel stock of up to 2–2,5 mm thickness can today be handled on FIBROFLEX® blanking dies, while highly accurate blanks of intricate contour can be processed from thin sheet of 0,2 to 0,01 mm thickness. It is here that the inherently uniform clamping pressure of the elastomer cushion proves its beneficial influence – as vindicated by achieveable part tolerances of ± 0,01 mm.

Metal forming with FIBROFLEX®

Projects of metal forming with FIBROFLEX® must always be based on the rule that an elastomer can be displaced but cannot be compressed. Consequently it is of para-mount importance to ensure that sufficient space is provided in an elastomer forming die for the accommodation of the displaced FIBROFLEX®

Press selection

Due to the normally somewhat greater bulk of elastomer dies, the availability of ample die space in the press has to be assured.

Hydraulic presses with their characteristic slow pressure rise are eminently suitable for elastomer tooling because this feature matches the somewhat delayed deformation behaviour of FIBROFLEX®.
For the same reason, mechanical presses may give a certain amount of trouble because of overloading.

Since no demands need be made on press accuracy, older machines can often be put to good use again with FIBROFLEX® tooling.

Provided applications follow these general guide lines, FIBROFLEX® Tooling elastomer will prove its enormous resilience time and again – giving shape to workpieces without losing its own.

Application examples of forming operations with FIBROFLEX® Elastomers

Fig. 5

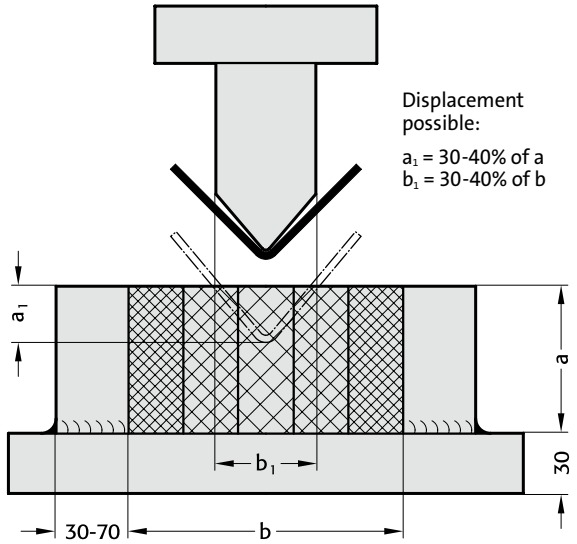

Vee-Bending

One of the easiest elastomer-forming operations is that of Vee-bending off a solid punch and into a die cushion of stacked FIBROFLEX® pads.

The necessary penetration of the punch and the amount of over-bending depend on the thickness, hardness and type of the material – and furthermore on the bending radius, the length of the free legs on the piece part, and lastly on the Shore hardness of the cushion.

Applicable to all kinds of bending operations is the general rule: the smaller the bending radius, the less will be the spring-back of the bend and the shallower is the required penetration of the punch.

Especially with larger batch quantities it is advisable to ensure all-round retention of the stacked elastomer cushion; it also pays to make punch and cushion identical in length.

Fig. 6

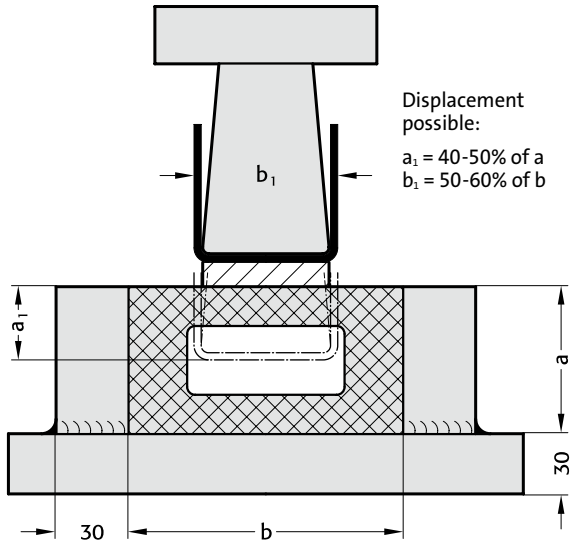

Bending of Vee- and U-Shapes

Bending of Vee- and U-shapes can be achieved either with stacked FIBROFLEX® pads of different hardness (Fig. 5), or with the aid of solid and hollow FIBROFLEX® Sections. These may consist of squares, channels or triangular sections.

Where solid sections or sheet is used as a cushion, wear of the elastomer material can be reduced through creation of an additional displacement space at the bottom of the cushion retainer box, similar to Fig. 11, where gib inserts are placed along the corners.

Hollow cushions, as well as those of a channel configuration, exhibit greater die life and are therefore the preferred choice for bending operations.

In the case of a U-shaped bend with straight bottom it may be advisable to insert a packing of 3–5 mm thickness, and of the same width as the flat bottom of the bend, underneath the cushion. This measure increases the forming pressure and helps to achieve a flat bottom on the workpiece.

The punch should be relieved on both sides in order to avail compensation possibilities for springback.

Fig. 7

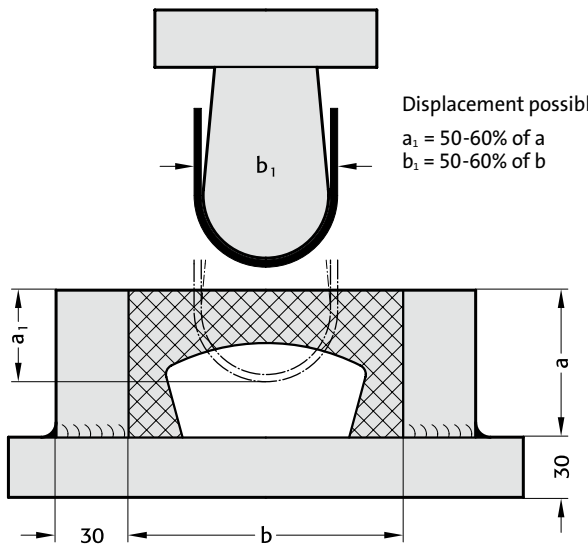

U-Bends with large radius

U-bends with a large bottom radius are difficult to accomplish. Punch penetration must of need be large; springback can be quite considerable.

In order to achieve good results, the use of hollow FIBROFLEX® sections or of channels becomes almost mandatory. This is illustrated in Figs. 7 and 12. Another alternative consists of machined form cushions in accordance with Fig. 13.

The hollow space of the channel-shaped cushion has the effect of increasing the horizontal pressure component in the die; this also holds true for hollow die cushions.

In all cases is it necessary to ensure that the cushion retainer box is sufficiently rigid.

Application examples of forming operations with FIBROFLEX® Elastomers

Fig. 8

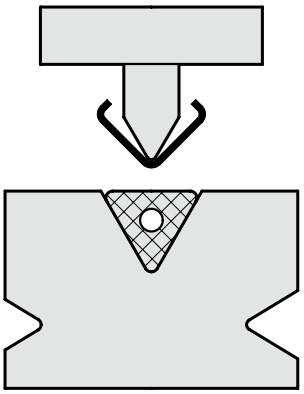

FIBROFLEX® Triangular sections are shaped to fit into the existing forming grooves of bending brake dies, thus eliminating die changes and/or the provision of a die cushion retainer box as required with square cushion configurations.

Fig. 9

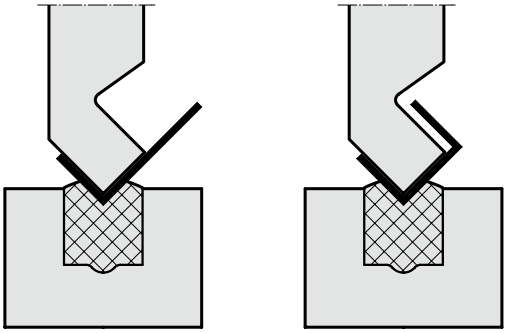

Depending on stock specifications the bending of a channel section may either be done off a Vee-shaped punch as a voluntary choice – or it may become an absolute necessity.

Two operational sequences are required, and a goose-necked punch configuration is essential.

Fig. 10

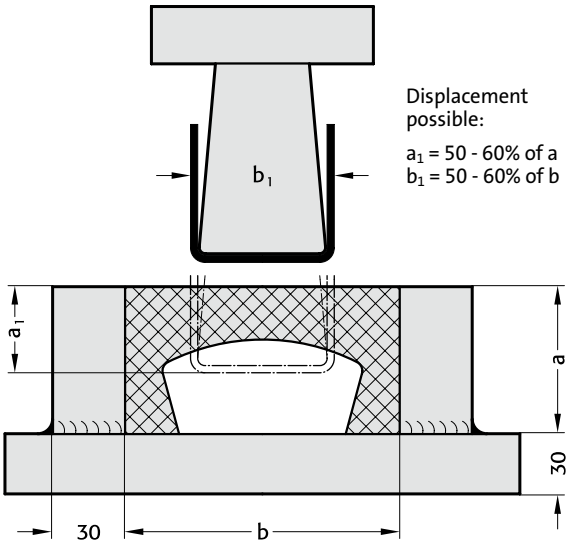

Fig. 11

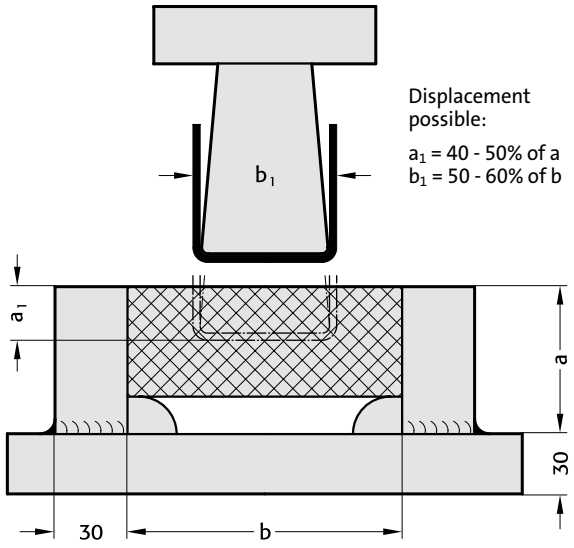

Fig. 12

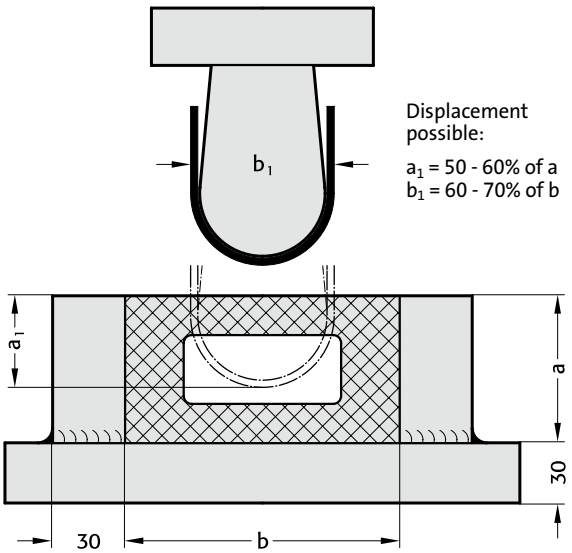

Fig. 13

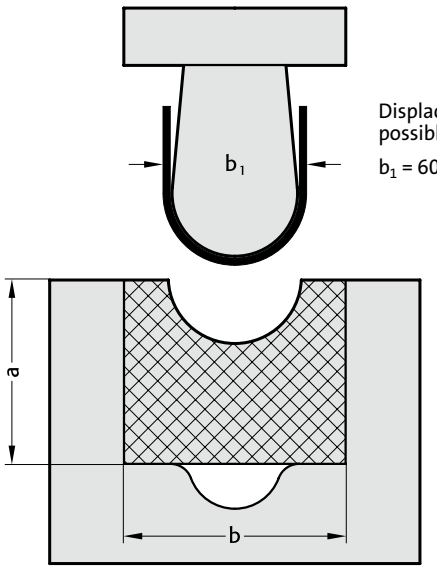



Blanking and forming with FIBROFLEX®-Elastomers

Blanking and forming with FIBROFLEX®-Elastomers

Description

FIBROFLEX® forming materials for blanking, embossing and forming are eminently suitable for use in small and medium series production. The main advantage is the reduction in tooling costs compared with traditional productions methods.

This means that, even with considerable workpiece changes or with prototypes, you can respond quickly to changing market requirements and delivery times.

You can avoid scratching or damaging the icreasingly common coated an highly polished sheet metals by using the gentle touch of elastometers for the forming process.

Forming with FIBROFLEX®

When forming using elastometers, always remenber the golden rule: whatever the extent of the deformation, the elastic FIBROFLEX® forming material remains constant, i.e. it can be displaced, but not compressed. The design must allow the elastomer to “flow” into a relief gap – that is the secret of success.

Choice of machine

When FIBROFLEX® matrices are used for blanking, embossing and forming the machine must be able to accommodate the displacement.

Hydraulic presses are preferable to mechanical presses because of their gradual pressure build-up which suits the characteristics of the FIBROFLEX® forming material as it changes shape.

If a mechanical press is overloaded as it approaches bottom dead centre (which is also the cutting point), there is an risk of the press being damaged.

With FIBROFLEX® the machine is not subjected to any stresses, so even old machines can be used.

FIBROFLEX® Forming
tool blanking – drawing – embossing

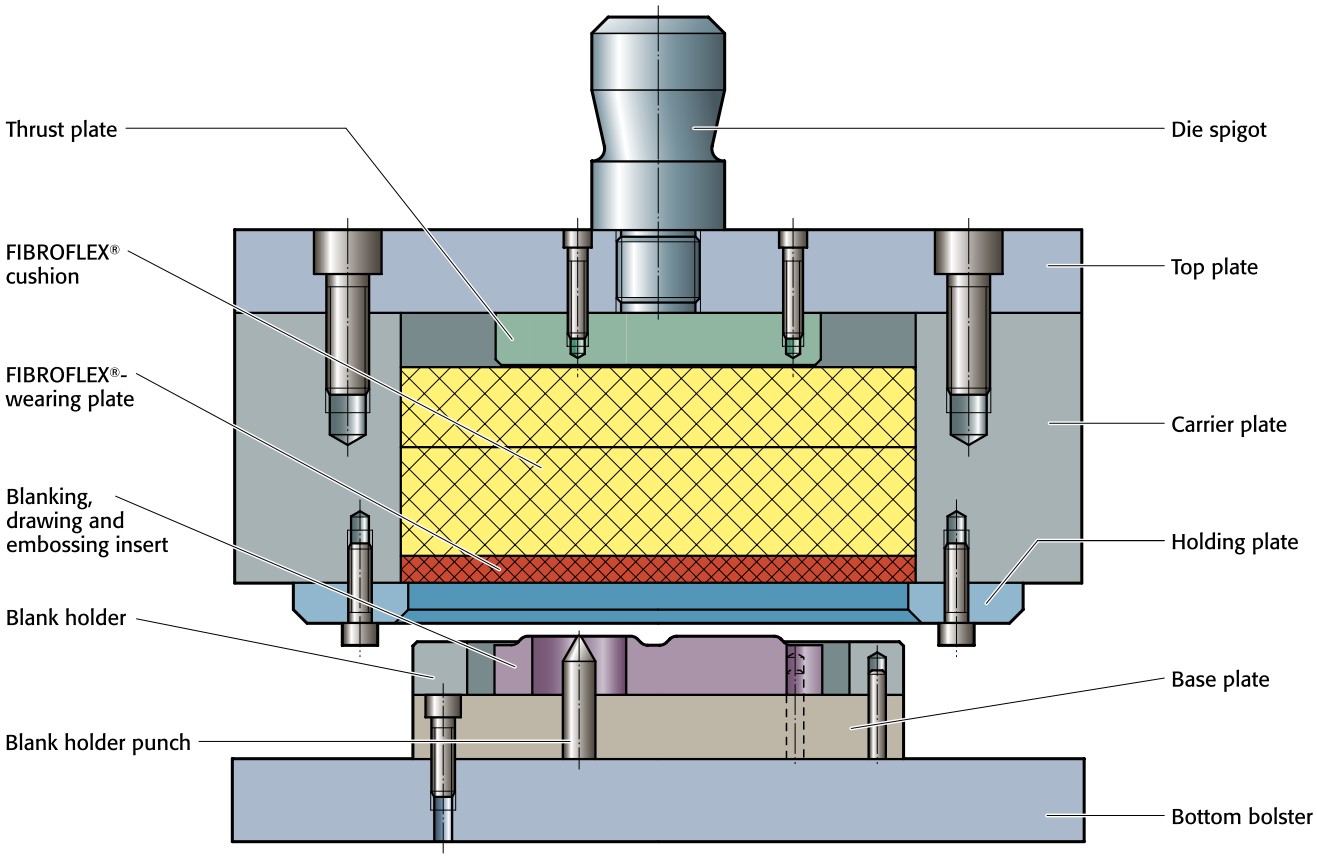

Combined blanking – embossing – punching

The workpiece is completed at one pass. The shape is determined by the combined blanking, hole cutting and embossing matrix blank holder punch, without a reverse shape mould on the cushion side.

The thrust plate in the carrier produces a concentration of pressure which produces a better result in the active tool range. The thrust plate also provides the necessary compensation for constant volume.

When producing workpieces of a different shape, only the tool elements in the lower section which produce the shape have to be exchanged.



FIBROFLEX® Forming tool dishing

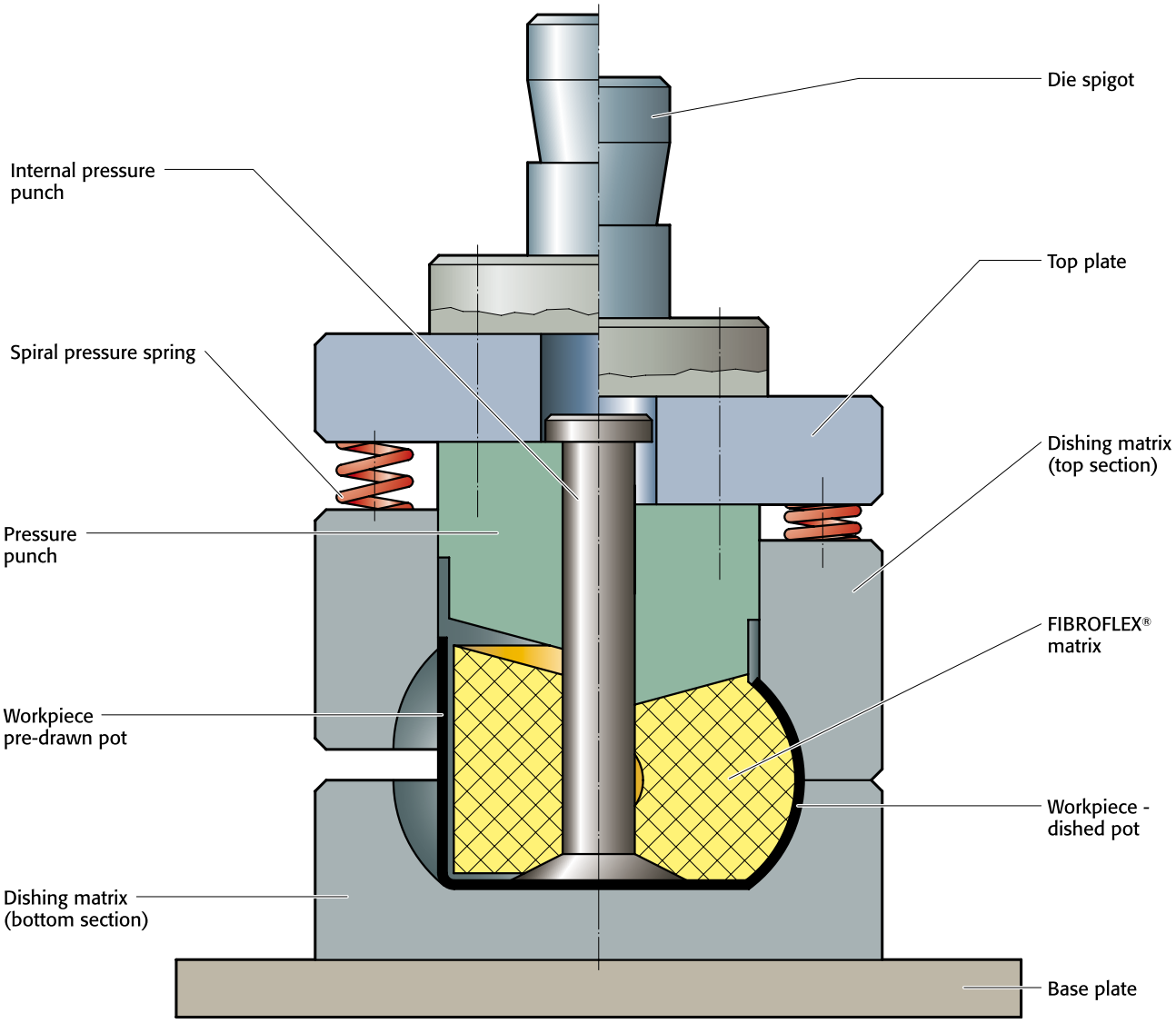



Bulging a pot

For flaring and bulging operations we recommend the use of FIBROFLEX® concave profiles wherever possible.

The wedge shape of the elastomer and the shape of the pressure and counter pressure punches both encourage the elastomer to deform in the required direction.

For bulging work it is worth taking into account the basic principle for FIBROFLEX®, namely that it maintains a constant volume. (Displaced volume equals bulging volume – see also description on page G17).

FIBROFLEX® Universal blanking and forming carrier

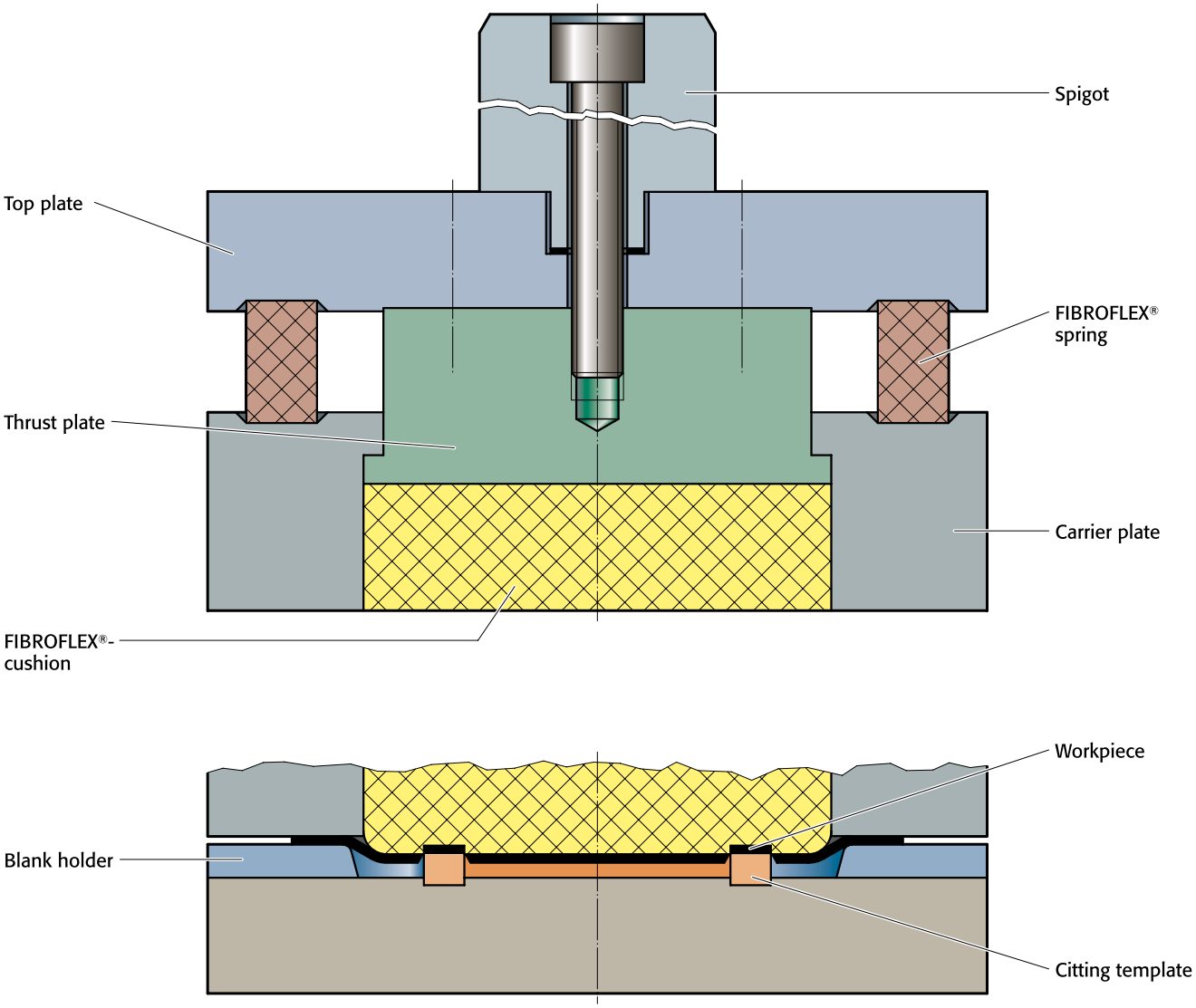

FIBROFLEX® blanking matrices

When blanking with elastomers, the workpiece materials, in contrast to the traditional blanking of workpiece materials, are subjected to their elastic limits, beyond which the material breaks.

The thickness of sheet steel which can be cut usting FIBROFLEX® is currently up to 2.5 mm.

The even clamping pressure which is excellent for pressing also means that parts with intricate contours can be manufactured.

It is possible to achieve workpiece accuracy of ± 0,01 mm.

During the blanking process the press pressure first deforms the elastomer. As soon as the elastomer reaches the limits of its deformation the workpiece is cut.

The less the stretch of the sheet metal, the easier it can be cut using the elastomer blanking process. Spring band steels, electric sheets and sheet aluminium all cut well using this process. Deep-drawing sheet steel is unsuitable for the elastomer blanking process.

FIBROFLEX® Forming tool drawing – embossing

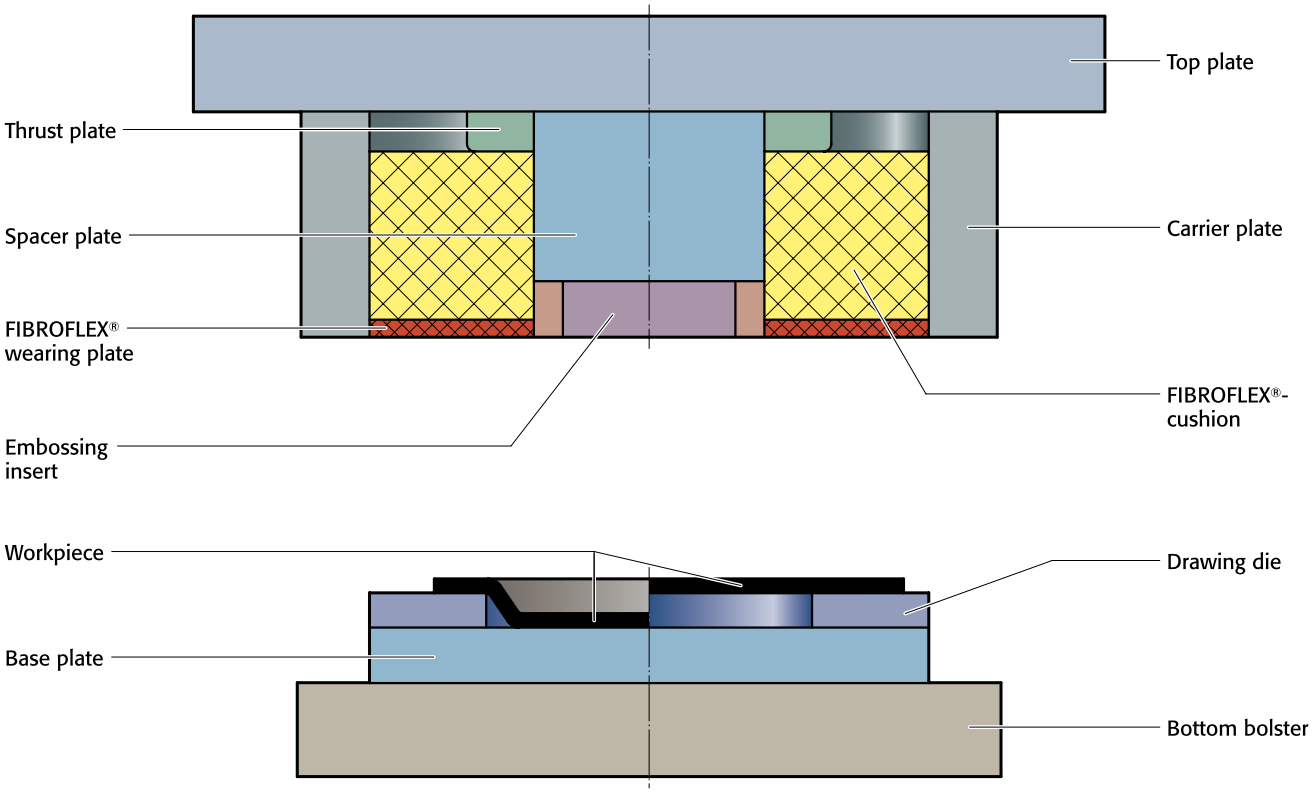



Drawing and embossing

The limits for flaring and bulging depend on the workpiece material, its thickness and hardness and also the height of the FIBROFLEX® cushion.

Maximum permissible deformation of the FIBROFLEX® cushion:

80 Shore A – 35%
90 Shore A – 30%
95 Shore A – 25%

subject to alterations

FIBROFLEX® Forming tool for flaring pipes

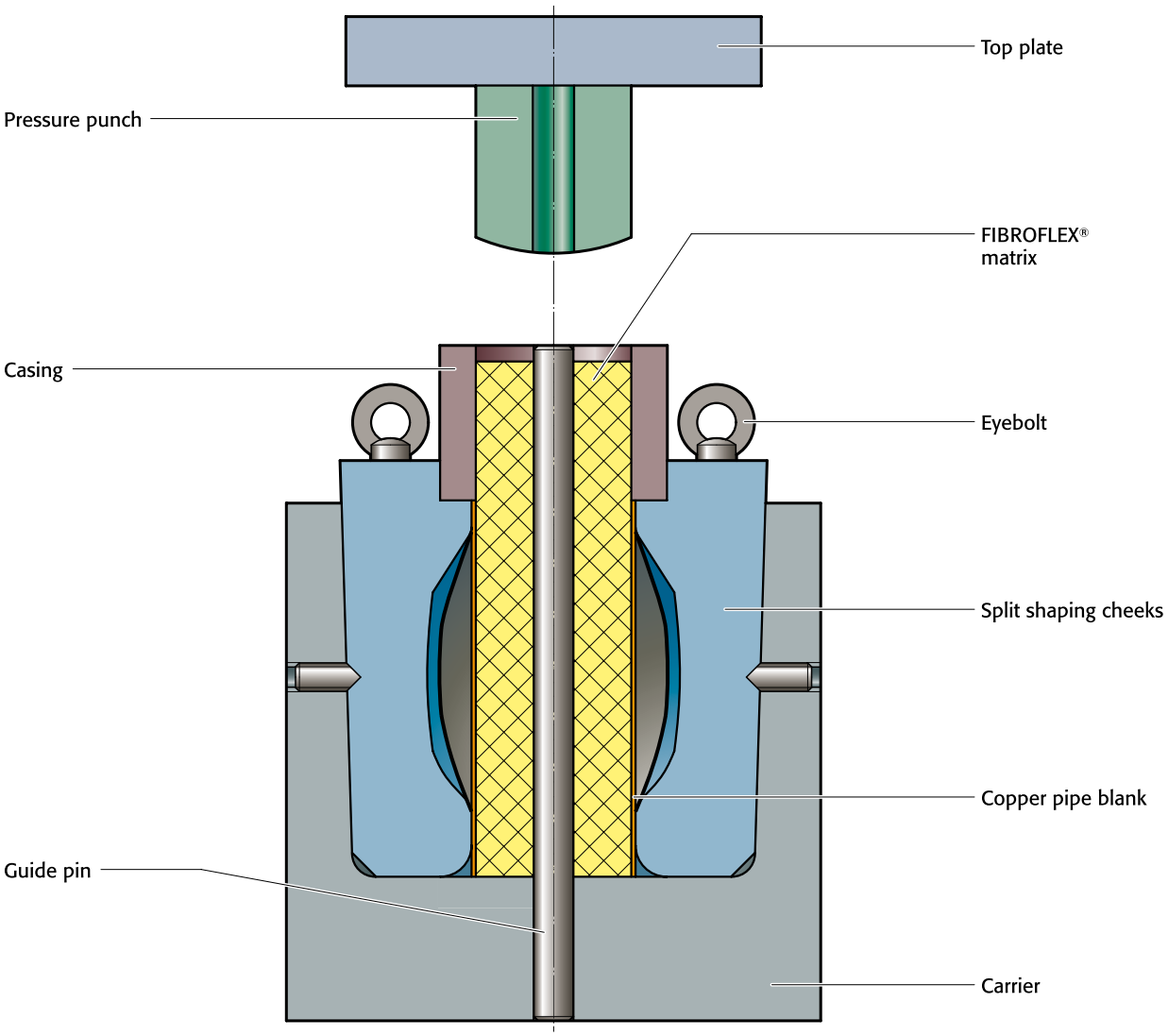

Flaring pipes

When flaring using FIBROFLEX®, split cheeks with a conical external surround are required to allow the workpiece to be released.

Depending on wall thickness, flaring ratios of 1.2 can be achieved. Above a workpiece diameter-to-length ratio of 2 : 1 it is advisable to use concave cushions with bolt guides.



A Die Sets

B Precision Ground Plates and Flat Bars

C Lifting and Clamping Devices

D Guide elements

E Ground Precision Components

F Springs

G Elastomer-Bars, -Sheets, -Sections

H FIBRO Chemical Tooling Aids

Tooling resin, metal adhesives, oils ang greases

J Peripheral Equipment

K Cam Units

L Standard Parts for Mould Making



Chemical Tooling aids

FIBROLIT® Tooling resins and metal adhesives

FIBROLIT® Chemical tooling aids are offered as a comprehensive range of reliable agents, specifically developed for the requirements of the toolmaking trade, and closely integrated with other FIBRO products.

Quite categorically the FIBROLIT® bonding technique relies on first principles only for the attainment of absolute alignment accuracy. Which could be called the very criterion of modern high-precision toolmaking but often in the past involved the accumulation of many small errors from conventional diemaking steps. And attempts at compensation on the bench. Compromises.

The FIBROLIT®-Concept achieves perfect die alignment by way of epoxy-bonding of vital die components, free from clamping stress and heat distortion, press fit shrinkages and errors arising from faulty machine tool geometry. And without recourse to sophisticated, expensive toolroom machines, thus saving both capacity and costs.

Successful application of the FIBROLIT® bonding technique however does depend on the observance of a few guide lines. These are fully explained in this section.

A quaint obstacle makes itself felt at times: conservatism, rooted deeply in the traditions of the toolmaking trade, sceptical of new ideas that often promise much ... but keep little!

In convincing contrast, the FIBROLIT®- Concept offers uncompromising success indeed. This is borne out by the unreserved acclaim from toolmaking experts all over the world.

FIBRO

Contents

H8-9

Representatives

H6

FIBROLIT®-ZWO - Technical data



280.02 H7

FIBROLIT®-ZWO

280.05 H7

FIBROLIT®-ZWO

280.08 H7

FIBROFIX®-SECHS

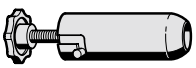

280.09 H7

Injection gun for FIBROFIX®-SECHS

H8

FIBROLIT®-Metal adhesive MK - Technical data

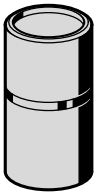

281.01 H9

Metal adhesive FIBROLIT® MK

280.24 H9

Thinning agent for FIBROLIT®-ZWO



281.243 H10

Anaerobic metal adhesives for securing of screws and bearing bushes

281.270 H10

Anaerobic metal adhesives for securing of screws and bearing bushes

281.648 H10

Anaerobic metal adhesives for securing of screws and bearing bushes

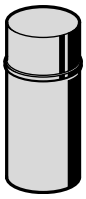

281.706 H11

Cleaner

280.20 H11

FIBROLIT®-LSP Leak Detector Spray

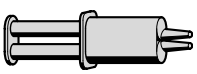

281.147 H12

Fluid Metal

281.401 H12

Cyanoacrylate adhesive

Contents

281.454 H12

Cyanoacrylate adhesive

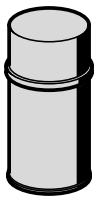

280.15 H13

FIBROLIT®-RL Penetration lubricant spray

280.131 H13

FIBROLIT®-ARF Marking out blue

280.23 H13

FIBROLIT®-ARF Marking out blue



280.8021 H14

Silicon oil

280.8001 H14

Oil

280.822405 H14

Release agent

280.27 H14

FIBROLIT®-TW Release agent

280.34 H15

280.35 H15

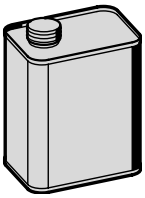

280.36.006 H16

FIBROLIT® Press tool lubricant

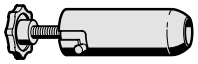

H17

FIBROFIX®-SECHS Application with the injection gun

H18-19

FIBROLIT®-ZWO und FIBROFIX®-SECHS Application examples

FIBRO

Technical data:
FIBROLIT® ZWO
FIBROFIX® SECHS

Physical properties:

viscosity at 25 °C	approx. 9000 mPas
pot life at 25 °C (mixed mann = 100 g)	approx. 25 min.
cuting time at 20 - 25 °C*	approx. 24 h
storage life at 20 °C	approx. 1 Jahr
thermal resistance (Martens) DIN 53458	approx. 50 - 55 °C (75 - 80 °C*)
flashpoint of resin	approx. 210 °C
flashpoint of hardener	approx. 207 °C
decomposition temperature (ISO/R 871-68)	>300 °C
thermal conductivity, within range of 14-38 °C (VDE 0304 section 1/7.59)	0,531 W/km
density (resin)	approx. 2,5 g/ml
density (hardener)	approx. 1,06 g/ml
compressive strenght DIN EN ISO 604	approx. 130 - 140 N/mm^2
tensile strenght DIN EN ISO 527-1, -2, -3	approx. 50 N/mm^2
flexural strenght DIN EN ISO 178	approx. 70 N/mm^2
ball indentation test DIN EN ISO 2039-1	approx. 213 N/mm^2
impact test	3,57 KJ/m^2
modulus of elasticity (ex tensile test)	approx. 8760 N/mm^2
linear shrinkage	approx. 0,05 - 0,12%

*cured at ambient room temperature for 24, or 15 h at 50 °C

Chemical resistance

Chemical substance	Note
Acetone	C
Formaline 30%	B
Xylol	A
Silicone solution DC 20	A
Dieselene	A
White spirits	C
Tetrachloroethylene	A
Perchloroethylene	A
Ethylacetate	C
Epichlorohydrene	C
Fluoric acid 10%	C
Chlophen T 64	A
Water	B
Sea Water	B
Solution of NaCl 5%	A
Formic acid	C
Lactic acid 10%	C
Sulphuric acid	C
Acetic acid 10%	C
Ammonia 25%	B
Aniline	C
Phenol–90	C
Hydrocloric acid 10%	B

A = no effect
B = small effect
C = destructive effect

subject to alterations

Tooling resin FIBROLIT®-ZWO
Tooling resin FIBROFIX®-SECHS





FIBROLIT®-ZWO Tooling epoxy resin

resin: 365 ml, hardener: 50 ml

A well-tried epoxy resin, chiefly for casting purposes. Size and shape of container permit easy stirring and mixing therein. Important: resin must be stirred throroughly prior to addition of hardener, whereupon complete intermixing requires further vigorous stirring which is a pre-requisite for even hardening.

FIBROLIT®-ZWO Consignment pack (Styrofoam)

1 can of casting resin + 1 cartridge hardener

Full instruction printed on package. Best results are obtained if ambient temperature and tempreature of steel components etc. are about 20 °C. Curing completed in 24 hours. Especially when smaller portions of resin are spooned out, (for the mixing of small quantities of casting resin) it is important that removal is preceded by thorough stirring: fillers tend to settle at the bottom of the can and must therefore be mixed evenly.
Mixing ratio by weight: 18 to 1 (resin : hardener).
Physical properties: in chapter H
Optional thinning agent: in chapter H





FIBROFIX®-SECHS Tooling epoxy resin

six packs of ready-to-mix resin + hardener, 40 ml each

Six packs of tooling resin/hardener, for the expedient, clean use of tooling resin in small volume. FIBROFIX® SECHS contains the same resin as FIBROLIT® ZWO – therefore identical instructions apply. FIBROFIX® SECHS is specifically suited for use in our Injection Gun 280.09 – see details on page H 17.

Styrofoam consignment package

Contents: 6 resin cartridges + 6 ampoules hardener + 1 stirring rod

Injection gun

For the fast, tidy application of FIBROFIX® SECHS, especially where small gaps or inaccessible locations are involved. Gun accepts throw-away cartridge with mixed resin or adhesive. Forced injection through compressing of cartridge by means of screw plunger. Empty cartridge is removed from gun and thrown away. Gun remains clean at all times.

FIBRO

Technical data:
Metal adhesive FIBROLIT® MK
Thinning agent for FIBROLIT® ZWO

Physical properties: FIBROLIT® Metal adhesive

density of Resin MK	1,16 ± 0,01 g/ml
density of Hardener MK	1,13 ± 0,01 g/ml
tensile shear strenght	40 - 50 N/mm²
thermal resistance (Martens)	45 - 50 °C
pot life (100 g-mixture)	15 - 20 min
shelf life at 20 - 25 °C	approx. 1 jear
time for complete curing at 20 - 25 °C	24 h approx.

Physical properties: Thinning agent

density	1,16 ± 0,02 g/ml
flash point (DIN 51584)	97 °C
shelf life at 20 - 25 °C	approx. 1 year
viscosity at 25 °C	1000 ± 100 mPas

Chemical resistance

Chemical substance	Note
Acetone	C
Formaline 30%	B
Xylol	A
Silicone solution DC 20	A
Dieselene	A
White spirits	C
Tetrachloroethylene	A
Perchloroethylene	A
Ethyl acetate	C
Epichlorohydrene	C
Fluoric acid 10%	C
Chlophen T 64	A
Water	B
Sea Water	B
NaCl -solution of 5%	A
Formic acid	C
Lactic acid 10%	C
Sulphuric acid	C
Acetic acid 10%	C
Ammonia 25%	B
Aniline	C
Phenol-90	C
Hydrocloric acid 10%	B

A = no effect

B = small effect

C = destructive effect

subject to alterations

Metal adhesive FIBROLIT® MK
Thinning agent for FIBROLIT®-ZWO



FIBROLIT® MK Metal adhesive

two-component tin, containing altogether 325 ml

Two-component adhesive on eposy resin basis. Mixing ratio is 2:1 by weight. Parts to be joined must be thoroughly degreased. Coarse surfaces improve adhesion. Glue line should not exceed 0,6 to 0,7 mm in thickness.

Application with brush or other suitable tool. The adhesive hardens out completely after 24 hours, but reaches a tensile shear strength of 30 N/mm^2 after 6^1/$_2$ hours. Bushes epoxy-bonded with FIBROLIT® MK remain their geometry and size after hardening of the adhesive.



Thinning agent for FIBROLIT® ZWO

container of 500 ml

A pure epoxy resin, this agent may be added at a certain ratio to FIBROLIT® ZWO in order to reduce the viscosity of the resin mix. Maximum admixture = 5%. It must be noted that the addition of thinning agent will extend the curing time.
Together with hardener 280.05, the thinning agent can be used as a casting resin – the correct mixing ratio is 5:1 by weight.

Anaerobic metal adhesives for securing of screws and bearing bushes



For screws and nuts

For the securing of screws and bolts with medium bonding strength. Protects against vibrations, corrosion and leakage, up to M 36. Normal hand tools will suffice for dismantling.

Temperature resistant from -55 to +150°C.

Bonding strength: 6 - 14 N/mm²

Contents of Bottle: 50 ml



For screws and nuts

For the securing of screws and bolts with high bonding strength, also for studs and nuts. Suitable for threads up to M 20.

Reliably seals hydraulic/pneumatic lines up to $^1/_2$" BSP.

Temperature resistant from -55 to +150°C.

Secured parts cannot be dismatled easily.

Seals gaps up to 0,15 mm max.

Bonding strength: 11 - 20 N/mm²

Contents of Bottle: 50 ml



For securing bushes and ball bearings

For bonding of bearings, bushes, bolts and other machine components. Very fast bonding to handling strength. Temperature resistant from -55 to +175°C.

Where oil-impregnated sintered bushes are to be secured, the special instructions must be observed.

Seals gaps up to 0,15 mm max.

Bonding strength: 16 - 30 N/mm²

Contents of Bottle 50 ml

Cleaner
Leak detector spray



Rapid-Cleaning spray

Spray can 400 ml

In order to achieve optimum results in bonding work, the affected surfaces should be thoroughly cleaned beforehand. LOCTITE 706 Spray removes oil, grease and contamination from metal surfaces treated with it. Upon evaporation, no residue remains.



Leak detector spray

400 ml

For fast and reliable detection of gas leaks and compressed air leaks:

Spray on to the suspect areas and foaming bubbles will appear at the location of any leaks.

The valve also allows you to spray upwards.

FIBRO Leak detector spray tests connections, whether they are brazed, screwed or welded, it tests fittings, valves, pressure vessels, hoses, pipe-work – in short, anything that needs a good seal.

You can use FIBRO Leak detector spray for all gases:

compressed air, oxygen, nitrogen, hydrogen, town gas, natural gas, liquid gas, carbon dioxide, nitrous oxide, acetylene, propane, butane, other flam-mable gases, etc.

FIBRO Leak detector spray is non flammable, non corrosive, non toxic and does not damage or crack plastics such as polyethylene, PVC etc.

Fluid metal
Cyanoacrylate adhesive

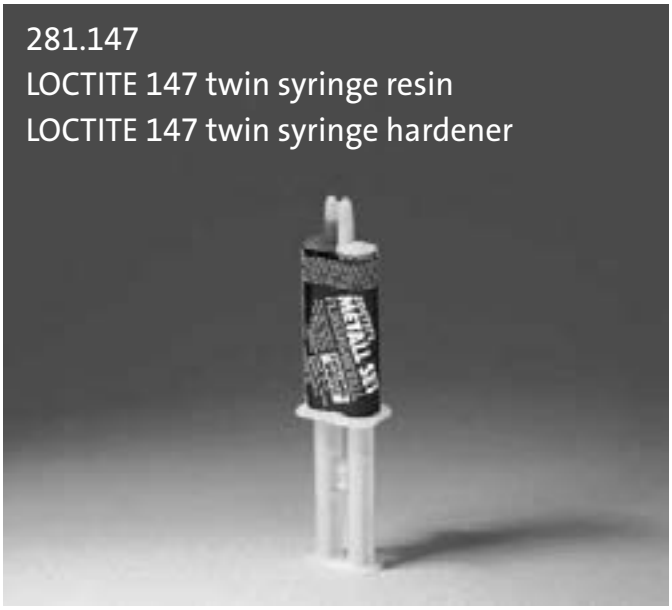

Fluid metal for fast repairs

Twin syringe 25 ml

Epoxy metal Product for high resistance repairs on steel and cast iron. Sticks on metal, glass, ceramics and other materials.

To be used e. g. for repairing of substandard working on tools and machine parts. Suitable as quick filler.

Potlife	8 min.
Fixturing strength	30 min.
Full curing	72 h.



LOCTITE cyanoacrylate adhesive 401/454

Typ 401, 50 g

Loctite 401 is a high performance cyanoacrylate adhesive. It bonds extremely rapidly to a wide variety of materials, including porous surfaces such as metal, plastics and rubber.

Typ 454, 20 g

Type 454 is as above but formulated to a thick, gel consistency. Will not flow into unwanted areas. Remains stationary on vertical or overhead surfaces. Fixturing strength depending to material between 20 - 120 sec.

subject to alterations

FIBROLIT®- RL
FIBROLIT®-ARF



FIBROLIT® RL Penetration lubricant spray

300 ml aerosol spray can

Of enormous penetrating capability, spray deposit enters tiniest joint gaps and thus releases corroded and seized parts such as nuts, bolts and press fits. Acts as long-lasting rust protective and lubricant.



FIBROLIT® ARF Marking out blue

300 ml aerosol spray can – 500 ml liquid container

A fast-drying marking out blue of outstanding intensity.

Colour: dark blue.

Degrease before application.

Silicon oil
Oil
Release agent FIBROLIT®-TW



Silicon oil

400 ml aerosol spray can

A release agent on silicon oil basis – for the attainment of tight clearances in connection with epoxy casting resins.

Applications include: cast guides on die set pillars, cast-in punches etc.

It is important to observe that components intended for above operations must have smoothly finished surfaces in order to be released without force after curing of the epoxy resins FIBROLIT® ZWO or FIBROFIX® SECHS.

FIBROLIT® TS is applied by spraying or with a rag; it should be rubbed in well before casting of the resin.



Oil

400 ml aerosol spray can

280.8001 is a low viscosity oil with good penetrating properties.

It is an excellent tool lubricant.



Release agent

400 ml aerosol spray can

silicon-free release agent

Application for moving parts such as guide pillars, punches etc. with epoxy casting resins FIBROLIT®-ZWO or FIBROFIX®-SECHS.

The release agent is applied by spray – distance 20 to 30 cm.

A uniform surface is achieved after rubbing with a cloth.



Release agent FIBROLIT® TW

500 ml liquid container

A release agent on wax basis – for the attainment of larger clearances in connection with epoxy casting resins. Applications include: cast guides on die set pillars, punches, cast-in bushes etc.

It is important to observe that components intended for above operations must have smoothly finished surfaces in order to release without force after curing of the epoxy resins FIBROLIT® ZWO or FIBROFIX® SECHS.

FIBROLIT® TW is applied with a rag. It should be rubbed in well. Repeated application will increase the clearance obtained.

FIBROLIT®-Oil-LD Grease-LD
Long-term lubrication for sintered metal plain bearings



FIBROLIT® Grease LD	FIBROLIT® Oil LD
400 ml	1000 ml

Sintered guide bushings are filled under vacuum with special oil 280.35.

As additional long term lubrication use FIBROLIT® Grease 280.34.
It replaces lost oil in the sintered guiding systems.

Further information see below.

New lubrication concept

FIBROLIT®-LD is a new lubrication concept for sintered metal plain bearings in order to achieve even longer running times.

FIBROLIT®-LD means that sintered bearing impregnation oils are kept in micro-cells for long-term and permanent lubrication in the form of a plastic oil reservoir.

Optimum results are achieved if the bushes have already been impregnated with the matched oil.

The plastic FIBROLIT® Grease-LD is provided in the oil supply grooves of the sintered bush. The supply groove is a advantage and is recommended but not absolutely necessary for additional lubrication, A cappilary bridge to the surface of the sintered bearing is essential.

FIBROLIT®-LD-Lubrication has a number of crucial adventages over previous methods such as grease depot lubrication or felts.

Type of additional lubrication	Felt	Grease depot	FIBROLIT® Grease-LD
Provision of lubricating film – Wetting of shaft though unimpregnated bearing	Very Good	Satisfactory	Good
Storability – Prevention of leaking and bleeding of oil	Poor	Very Good	Very Good
Oil output – Use of oil supply	Very Good	Poor	Satisfactory
Effectivity – Longer life of bearing	Satisfactory	Satisfactory	Good
Automation – Automated application	Difficult, expensive	Good	Very Good
Overall assessment	Satisfactory	Satisfactory	Good

Lubricability

FIBROLIT®-LD is a gelled lubricant and has double the oil descharge capacity of conventional soap lubrication depot grease. An oil excess as with felts is not encountered. The guide slot is therefore better dised and so supplied for a longer period. The service life of the guide is prolonged.

FIBROLIT®-LD-additional lubrication offers longest service life.

Temperature and vibration-stable

FIBROLIT®-LD is temperature-stable (-40 to +150 °C) and does not flow off under the effect of heat. The plastic oil reservoir retains its strength and remains in place even under vibration forces.

The FIBROLIT®-LD lubrication concept opens up a new dimension of possible stroke speeds for tools with sintered guides.

FIBROLIT® Press tool lubricant



Container 1000 ml

FIBROLIT® 280.36.006 is a press tool lubricant without any detrimental influence on subsequent processes, thus eliminating the need for its removal after the stamping operation.
FIBROLIT® 280.36.006 evaporates at room temperature.
It is non-toxic and has no negative influence on the environment.

Advantages:

– cleaning of components falls away
– components do not stick together
– welding and soldering possible without rinsing etc.
– surface treatments possible without cleaning process (electro-chemical, cataphoretic)
– affords good corrosion resistance
– no oxidisation or bacteria-infestation of the lubricant
– increased tool life
– exposure to 300 °C results in absolutely residue-free evaporation

Applications:

– stamping of components from transformer sheet
– all kinds of forming operations
– an aid to bending and coining operations
– manufacture of steel drums
– assists difficult roll-forming processes
– also suitable for special chip-removing operations

Application of FIBROLIT® 280.36.006 to components, sheets and strip:

The lubricant can be applied by way of immersion, spraying and roll-coating. The use of wipers ahead of press ingress successfully controls lubricant layer.

Drying time:

Depends on temperature and time span. An air blast as well as heat shortens the drying time considerably.

Suitable for:

All types of steel sheet, inox, aluminium, copper alloys, laquered and zinc plated steel sheet/strip.

subject to alterations

Application of FIBROFIX® SECHS with the FIBRO Injection gun

1

1 Injection gun
2 Injection cartridge
3 Glass ampoule with hardener
4 Stirring rod

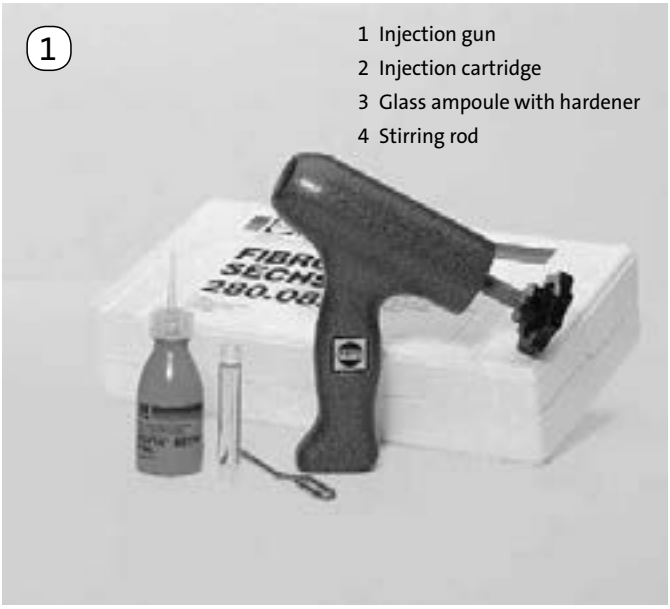

2

Unscrew nozzle from injection cartridge. Stir up resin.
Open ampoule and hold over cartridge. Use suitable rod to push hardener down into cartridge.

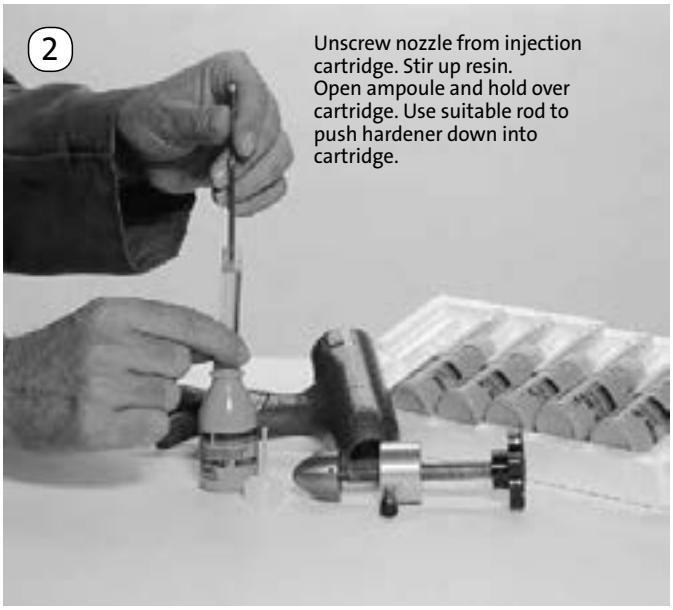

3

Stirring and mixing can be done with the aid of a drilling machine, Stirring rod held in the chuck.
Select slow revs in order to prevent air bubbles from forming in the resin.

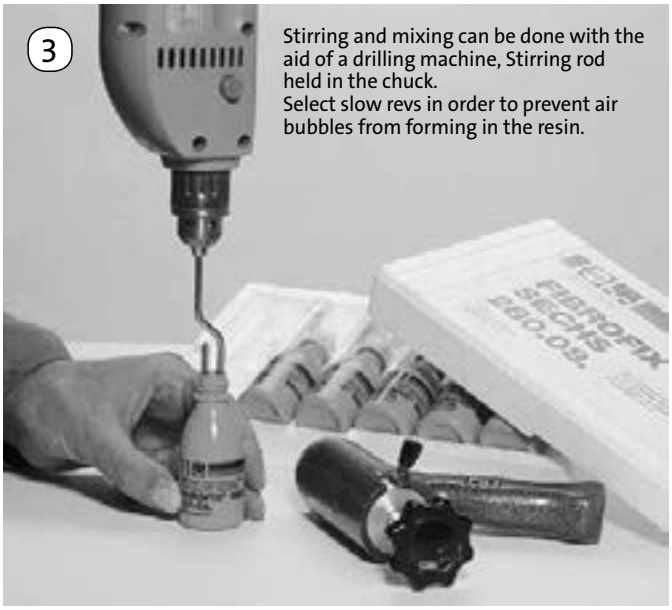

4

Open bajonet lock on injection gun and remove screw plunger.
Screw nozzle back onto injection cartridge.
Place cartridge inside gun – nozzle to front.

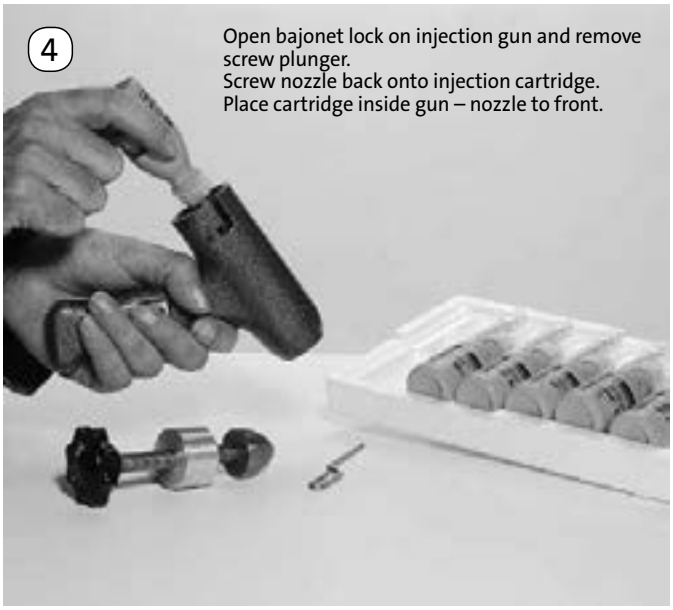

5

Place screw plunger into injection gun and lock the bajonet mechanism. Holding nozzle upwards, cut off its tip.



6

And this is how it's done –:

hold nozzle against small injection hole drilled from outside of workpiece into bottom end of injection gap. Turn plastic knob, thus injecting the resin through the auxiliary hole into injection gap. The rising resin will expel the air in the gap, thereby preventing air from becoming entrapped. Inject slowly so as to allow the resin to rise evenly all the way round.

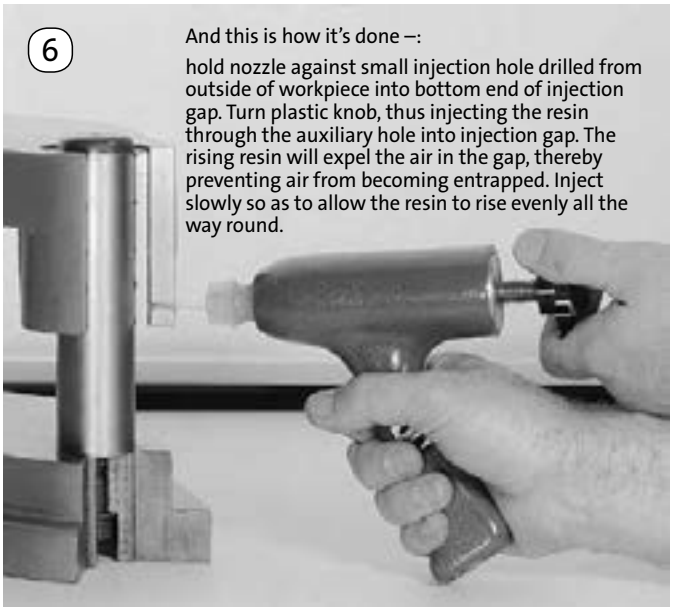

Application examples: FIBROLIT® ZWO, FIBROFIX® SECHS

Casting of punch guides in guiding strippers

Suitable apertures in the stripper can be marked out from finished matrix. Allowance must be made for a casting gap of 1 - 3 mm around the punch.

Prolonged storage and cold can cause the resin to become stiff and unworkable. Place resin container in hot water of about 60 °C, then stir thoroughly and let cool down to room temperature.

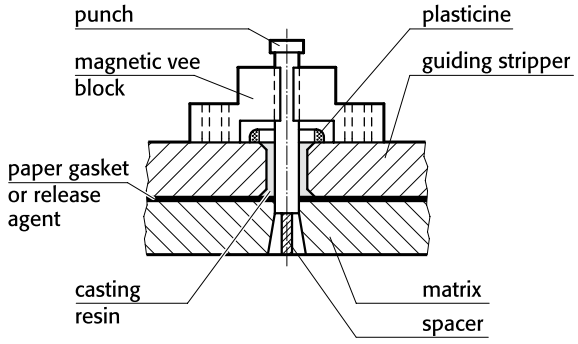

Fig. 1:

Casting of punch guide in guiding stripper

Quite often it will suffice to drill a hole in approximation of a shaped aperture – as shown in fig. 2.

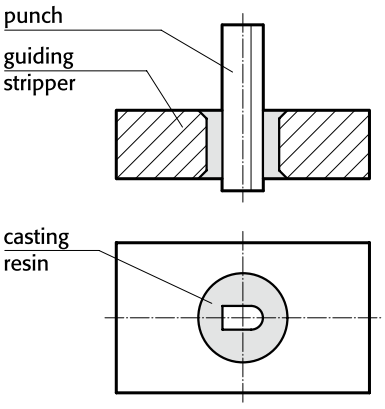

Fig. 2:

Cast guide for form punch

Where extremely thin casting gaps cannot be avoided, admixture of FIBROLIT® Thinning agent 280.24 will reduce the viscosity of the epoxy mixture, thus facilitating casting or injection.

The casting aperture/hole in the stripper requires thorough degreasing. Apply a coating of release agent to both the punch and the matrix. Bring stripper and matrix into accurate alignment, then clamp together.

Various methods exist for the exact positioning of the punch prior to casting. A magnetic vee block can be used for assuring verticality. Metal foil or plastic shims may help in providing equal clearance with the matrix. Segmented matrices are best made initially to zero clearance – relief and clearance to be ground after casting; this method ensures correct centring of the punch versus the matrix inserts.

A ring of plasticine helps to confine the poured resin, also acts as a casting funnel. Often the use of the FIBRO Injection gun 280.09 will be found much easier, especially where access is obstructed.

With simple dies, the following execution leads to expedient and good results:

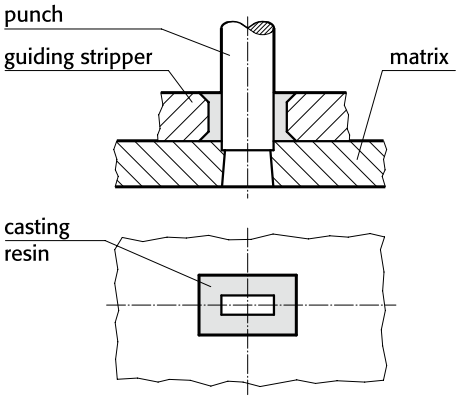

Fig. 3:

Casting of the punch guide in a simple piercing/blanking die

The punch is set up squarely and positioned dimensionally correct relative to the matrix. The punch guide is then cast in the prepared stripper aperture – the stripper being dowelled to the matrix, of course.

After hardening, the punch is forced lightly into the soft matrix, this being facilitated by the usual undersized preliminary matrix aperture.

The matrix is then worked to the impressed contours, finished and finally hardened.

Where stripping forces are considerable and/or where large runs are anticipated, the cast epoxy resin guides in the stripper can be protected against wear by a wear plate. This plate is fitted to the underside of the stripper – before or after casting.

Fast-running dies require lubrication of the punch guide; an oil well is easily formed at the top end of the cast resin guide – as shown in fig. 4.

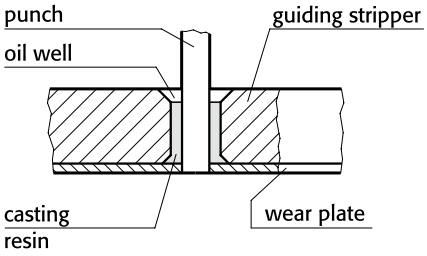

Fig. 4:

Cast punch guide with oil well and wear plate underneath stripper

Quill punches ought to be given maximum support over their length; a typical cast stripper guide for such thin punches is shown in fig. 5.

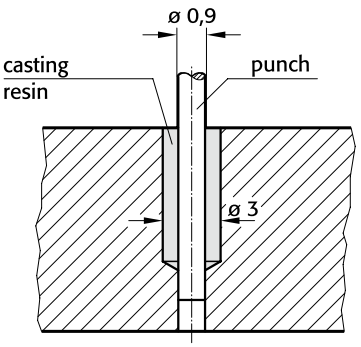

Fig. 5:

Cast guide for thin Quill-Type Punch

subject to alterations

Application examples: FIBROLIT® ZWO, FIBROFIX® SECHS

Fig. 6 shows a guiding stripper with jig-bored holes for a number of dowel pins. The aperture was sawn. After driving in of the dowel pins the punch is inserted and then the guide is cast around it. The line contact with the hardened dowels makes the punch guide more durable, and the lining up of the punch (prior to casting) is eliminated.

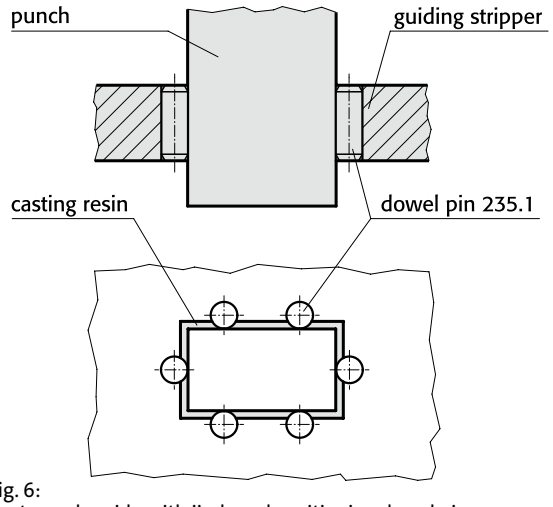

Fig. 6:
Cast punch guide with jig-bored positioning dowel pins

A complicated guiding stripper with many intricately-shaped punch guiding holes is shown in fig. 7. All apertures in the stripper were drilled, sawn or milled, and the punch guides were cast with FIBRO tooling resin.

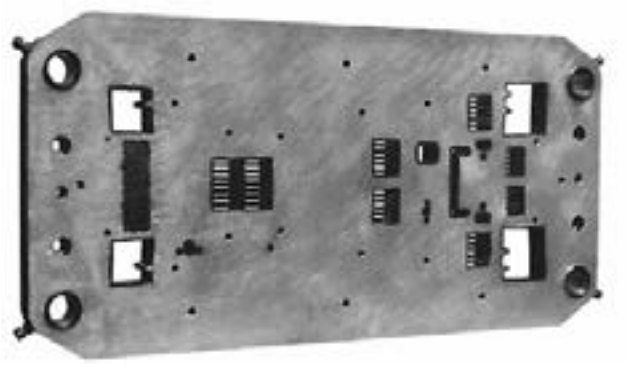

Fig. 7:
Guiding stripper with numerous punch guides, cast with FIBRO tooling resin

Examples of epoxy-casting and epoxy-bonding work in a progression die

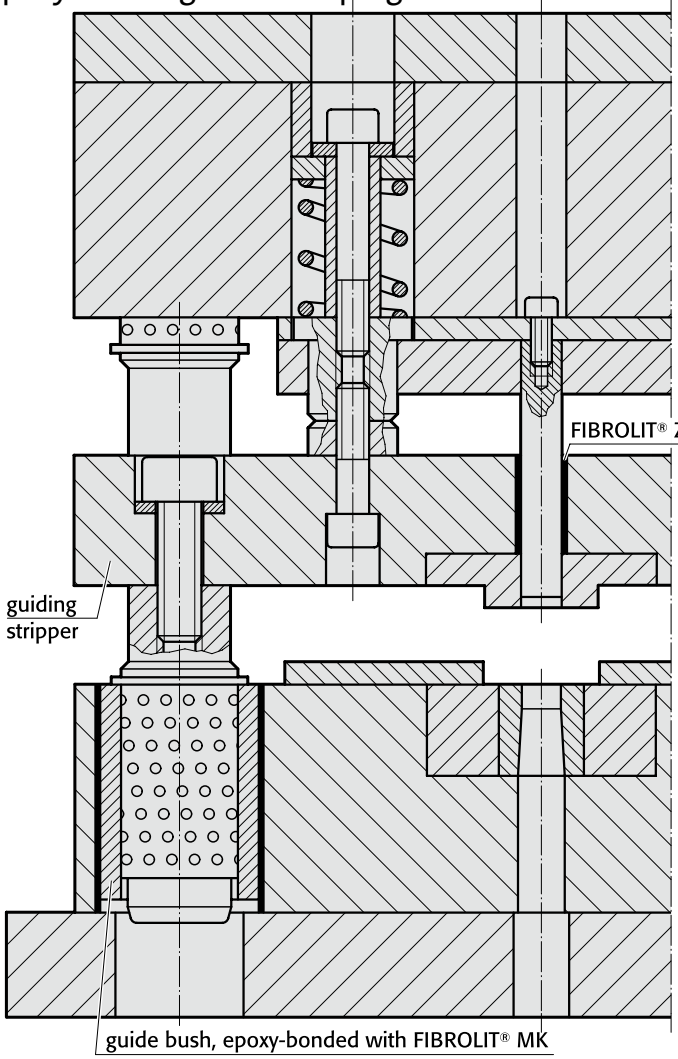

Cast-in liner bushes for dowel pins

These hardened Liner Bushes are used to great advantage where it is necessary to dismantle or replace unhardened components frequently – for instance in precision stamping dies etc.

The jig-ground dowel pin holes in the hardened and ground plates assure perfectly accurate interchangeability.

The unhardened counterpart is brought into precise position and alignment by way of casting-in of the hardened liner bushes. Either FIBROLIT® ZWO or FIBROFIX® SECHS is used for casting.

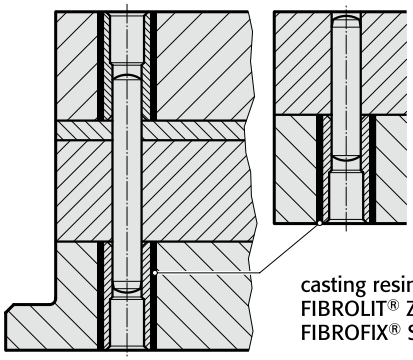

A Die Sets

B Precision Ground Plates and Flat Bars

C Lifting and Clamping Devices

D Guide elements

E Ground Precision Components

F Springs

G Elastomer-Bars, -Sheets, -Sections

H FIBRO Chemical Tooling Aids

J Peripheral Equipment

for presses, tool manufacture, assembly aids
Conveyor belts, pneumatic conveyors, electric conveyors

K Cam Units

L Standard Parts for Mould Making



Peripheral equipment

Press and tools products

Ball bearing inserts and rails

If you need fast and reliable tool changing, you will find that equipping or updating your press with ball bearing inserts and rails is the ideal solution.

With ball bearing inserts and rails you can move or change tools fast, and above all accurately - even if they weigh several tons. In the past this has often been an awkward, inconvenient and sometimes even critical process.

Equipping and retrofitting press tables with ball bearing rails is extremely straightforward as virtually every press table has fixing slots. The ball bearing rails are simply inserted and fixed in these slots.

Ball bearing inserts can be used for press tables which do not have fixing slots. These are fitted in the locating sockets.

The ball bearings of the inserts and rails will move in any direction and project only slightly above the surface of the press table. The result is that only slight force is required for movement on the table. When the tool is clamped in place it sits on the table and the clamping pressure causes the ball bearings to retract into their sockets.

Roller inserts and roller rails

Roller inserts and rails will carry twice the load of ball bearing inserts and rails and ensure precise linear movement of the tool. This linear technology requires precise positioning of the tool when it is transferred to the tool bench.

Roller rails are used especially on presses with stationary mounting devices.
The special roller bearing technology operates reliably at high temperatures (200 °C).

Unlike ball bearing rails, roller rails can be used in tool base plates, i.e. installed upside down.

Conveyor belts

Our conveyor belts are designed for use in a wide variety of production applications.

There is a belt width and length to suit almost every application.

The conveyor belts are powered by an electric motor, which is electronically regulated to provide belt speeds from 0.02 to 30 metres per minute.

The motor can be mounted horizontally or vertically, on either side of the belt for either direction of movement. Conveyor belts are available with or without profiles across the belt. Conveyor edge rails are also available in a range of designs.

Pneumatic conveyors

This pneumatic conveyor is unique and is patented. It was designed to provide an effective and affordable solution to the problems of conveying parts and disposing of waste.

This beltless system conveys stampings and waste from the tool area by vibration alone.

Electro-mechanical transporters

The FIBRO electro-mechanical transporters have been developed to effectively and inexpensively solve the problems of transporting parts and the removal of stamping and cutting residues from presses.

The principle behind the electro-mechanical transporter is the so-called „table cloth effect“. The slow acceleration during the forward stroke pushes the parts or offcuts forwards. The fast return stroke of the guiding system results in a transport movement in only one direction.

FIBRO

Contents



2198.32. J8

Ball bearing insert without collar



2198.33. J8

Ball bearing insert with collar

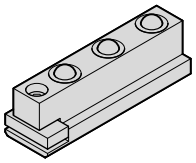

2198.42. J9

Ball bearing rail



2198.34. J10

Roller insert without collar



2198.35. J10

Roller insert with collar

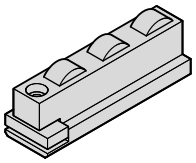

2198.44. J11

Roller rail

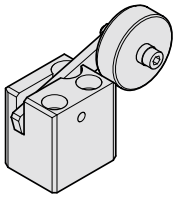

2198.50.55. J12-13

Spring mounted rollers to VW Standard

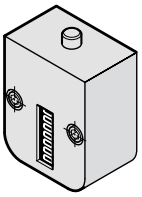

3710.12.01 J14

Counter view, mechanical

3710.00.12.01 J15

Installation frame for counter view

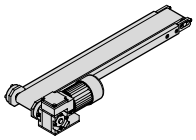

2195.301. J20

Conveyor belt, electrically controlled

2195.302. J21

Conveyor belt, electrically controlled

2195.401. J22

Conveyor belt, electrically controlled

2195.402. J23

Conveyor belt, electrically controlled

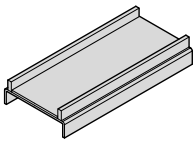

2195.114. J24

Delimiting guide for conveyor belt

2195.115. J24

Delimiting guide for conveyor belt

2195.116. J24

Delimiting guide for conveyor belt

Contents

2195.117. J24

Delimiting guide for conveyor belt

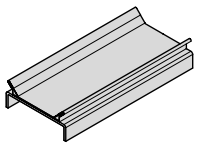

2195.218. J25

Delimiting guide with loss prevention for conveyor belt

2195.219. J25

Delimiting guide with loss prevention for conveyor belt

2195.220. J25

Delimiting guide with loss prevention for conveyor belt

2195.221. J25

Delimiting guide with loss prevention for conveyor belt

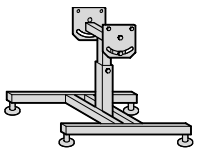

2195.120./121. J26

Stand for conveyor belt

2195.130./131. J26

Stand for conveyor belt

2195.140./141. J26

Stand for conveyor belt

2195.150./151. J26

Stand for conveyor belt

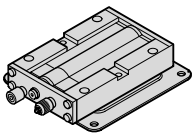

2199.03/10/40/70 J29

Pneumatic conveyor

2299.001. J33

Electro-mechanical transporter - vertical gear position

2299.002. J33

Electro-mechanical transporter - horizontal gear position

2299.011. J34

Electro-mechanical transporter - vertical gear position, with profile and support

2299.012. J34

Electro-mechanical transporter - horizontal gear position, with profile and support

2299.121. J35

Electro-mechanical transporter - vertical gear position, two slides, with profile and support

2299.122. J35

Electro-mechanical transporter - horizontal gear position, two slides, with profile and support

FIBRO

Contents

2299.221. J36

Electro-mechanical transporter - vertical centre gear position, two slides, with profile and support

2299.222. J36

Electro-mechanical transporter - horizontal centre gear position, two slides, with profile and support

2299.510 J37

Electro-mechanical transporters - Fastening element with height adjustment system

2299.511 J37

Electro-mechanical transporters - Fastening element

2299.520 J38

Electro-mechanical transporters - Distance

2299.540 J38

Electro-mechanical transporters - Quick clamp for guiding system

2299.541 J38

Electro-mechanical transporters - Quick clamp for guiding system

2299.530 J39

Electro-mechanical transporters - Angled mounting with adapter plate



Electronic Thread Moulding

PATENTED

please request your catalogue

further information on request

10.2014

FIBRO

Electronic Thread Moulding

The electronic thread moulding unit, specially designed for punching and forming processes, stands out thanks to its excellent process integration. Regardless of whether the electronic thread moulding unit is used in progressive dies or progression tools, in presses or in automatic punching and bending machines, the desired threads are created in a reliable and controlled fashion. This improves thread quality, increases reliability and ensures quick, cost-effective production.

Flexibility

The electronic thread moulding unit can be used in a wide variety of presses, progressive dies and automatic punching machines thanks to its independent drive and versatile control unit. If required, a thread cutter can also be operated instead of the non-cutting thread moulder. The compact design allows for the greatest possible flexibility.
Integration takes place through installation in existing equipment. The control unit of the electronic thread moulding unit is coupled with the equipment according to requirements. The simple programming facilitates quick calibration of all parameters.

Quality

The thread moulding unit produces high quality threads in sizes M2-M24. The threads stand out thanks to:

- great strength and stability
- high surface quality

The quality test includes an ongoing check of the thread moulding cycle. The condition of the thread tool, the tolerance of the core hole and the quality of the resulting thread are inferred from the monitored parameters. If limit values are fallen short of or are exceeded, a stop signal is sent to the press or equipment and a corresponding error message is produced. Furthermore, all data sets can be read out from the controls and summarised externally as a report, for instance within a quality assurance system.

Cost effectiveness

In addition to producing high quality threads, the thread creation is above all extremely cost effective. Cost savings can be achieved through:

- long service life of the tools
- faster processing times
- avoiding rejects
- eliminating the feeding of parts and additional production stages
- a high level of investment security

At a glance

- Versatile and flexible application
- Autonomous system
- Large spectrum of thread sizes M2-M24 (larger upon request)
- Simple programming and control
- High quality
- Stability and strength
- Surface quality
- Integrated quality control
- Cost effective
- Cost savings
- Short production times
- A high level of investment security

Sample applications





Electronic Thread Moulding



The controls and the servo regulator for the drives are located in the control box. The size of the control box varies according to the number of systems that must be controlled. The control unit can regulate up to 6 independent drives. 10 programmes per unit allow unrestricted programming of the parameters (rotation speed of the leader, limitation of the torque, number of rotations of the leader, cycle time, batch counter, process data monitoring). Data storage may also take place, which serves to record all the torque values.



The moulding head transforms horizontal rotation into vertical rotation. The feed motion is carried out by a leader. The thread pitch of the leader corresponds to the pitch of the thread to be moulded. The moulding tool is operated with maximum precision with the help of the head spindle sleeve. A clamping sleeve is used to clamp the thread moulder.

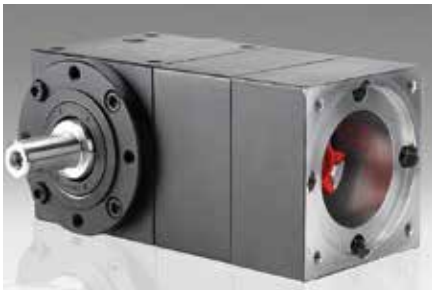

The bevel gear serves to limit the length of the installation space required by the drive. Using the bevel gear is optional.



A flexible and compact micro dosing unit with a volumetric dosing pump allows for precise and reliable lubrication. The nozzle technology was developed for punching and forming processes.



The drive shaft transfers the drive's torque to the moulding head. By evening out differences in height and length, the moulding head can be installed in every position within the tool. It is also manoeuvrable on holding-down plates. The maximum clearance between the drive and the moulding head is 500 mm.



The drive consists of one synchronous servomotor for each moulding head that must be powered. The servomotor is configured according to the thread size. This makes it possible to create different thread sizes in a tool using one control. Thanks to the constant cutting speed, significantly longer service lives are achieved than is the case with mechanical, forced piloted systems.
The drive is independent from the press stroke and press motion. The maximum rotation speed is 6000 U/min.

Process comparison

++ excellent + good • satisfactory – adequate – – inadequate	electronic thread moulding	thread cutting*	threaded/ punched nut	weld nut
Possible uses				
Thread sizes	+	++	+	+
Tensile strength of the material	•	•	++	++
Flexibility	++	– –	– –	– –
Quality				
Surface	++	•	•	•
(Pull-out) resistance	++	–	–	–
Load capacity	++	+	+	+
Reliability	++	++	– –	– –
Time				
Number of process stages	++	+	– –	– –
Processing time	++	•	– –	– –
Cost				
Production costs	++	–	•	– –

* as a discrete, downstream process stage

Ball bearing insert without collar
Ball bearing insert with collar



2198.32.

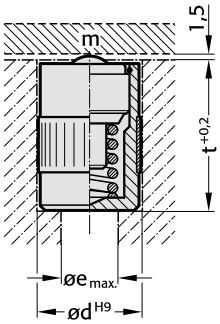

Note:

The supporting ball bearings raise the object to be moved (tool) away from the table surface and replace the surface friction with rolling friction. This significantly reduces the force required to move the tool.

2198.32. Ball bearing insert without collar

Order No	d	Load capacity m [daN]	Ball diameter	e	t
2198.32.020	20	25	10	10	30
2198.32.024	24	40	12	14	38
2198.32.030	30	63	15	20	44
2198.32.040	40	100	20	30	53



2198.33.

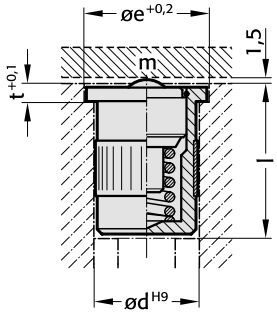

Note:

The supporting ball bearings raise the object to be moved (tool) away from the table surface and replace the surface friction with rolling friction. This significantly reduces the force required to move the tool.

2198.33. Ball bearing insert with collar

Order No	d	Load capacity m [daN]	Ball diameter	e	t	l
2198.33.020	20	25	10	25	3.5	31
2198.33.024	24	40	12	30	4	39
2198.33.030	30	63	15	35	5	45
2198.33.040	40	100	20	50	6	54

Ball bearing rail

2198.42.

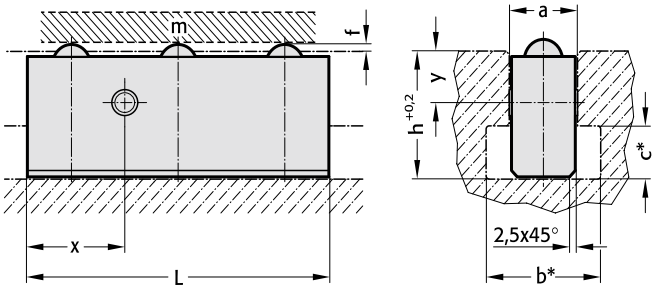



Note:

The ball bearing rails are pushed into the DIN 650 T-shaped grooves in the press table and are fixed in place by the clamping piece. The size and number of the ball bearing rails is determined by the size of the T-shaped groove and the load-bearing capacity required. Once the tool is clamped in place, it lies on the press table and the clamping pressure presses the ball bearings into the holes.

* T-shaped grooves are not absolutely necessary.

2198.42. Ball bearing rail

Order No	a	Load capacity m [daN]	L	Number of balls	Balls diameter	f	b*	c*	h	x	y
2198.42.18.105	18	75	105	3	10	1.5	30	12	30	35	14.5
2198.42.18.140	18	100	140	4	10	1.5	30	12	30	35	14.5
2198.42.18.175	18	125	175	5	10	1.5	30	12	30	35	14.5
2198.42.18.210	18	150	210	6	10	1.5	30	12	30	35	14.5
2198.42.18.280	18	200	280	8	10	1.5	30	12	30	35	14.5
2198.42.18.350	18	250	350	10	10	1.5	30	12	30	35	14.5
2198.42.22.120	22	120	120	3	12	1.5	37	16	38	40	14.5
2198.42.22.160	22	160	160	4	12	1.5	37	16	38	40	14.5
2198.42.22.200	22	200	200	5	12	1.5	37	16	38	40	14.5
2198.42.22.240	22	240	240	6	12	1.5	37	16	38	40	14.5
2198.42.22.320	22	320	320	8	12	1.5	37	16	38	40	14.5
2198.42.22.400	22	400	400	10	12	1.5	37	16	38	40	14.5
2198.42.28.135	28	190	135	3	15	1.5	46	20	48	45	19
2198.42.28.180	28	250	180	4	15	1.5	46	20	48	45	19
2198.42.28.225	28	320	225	5	15	1.5	46	20	48	45	19
2198.42.28.270	28	380	270	6	15	1.5	46	20	48	45	19
2198.42.28.360	28	500	360	8	15	1.5	46	20	48	45	19
2198.42.28.450	28	630	450	10	15	1.5	46	20	48	45	19
2198.42.36.150	36	300	150	3	20	1.5	56	25	61	50	24.5
2198.42.36.200	36	400	200	4	20	1.5	56	25	61	50	24.5
2198.42.36.250	36	500	250	5	20	1.5	56	25	61	50	24.5
2198.42.36.300	36	600	300	6	20	1.5	56	25	61	50	24.5
2198.42.36.400	36	800	400	8	20	1.5	56	25	61	50	24.5
2198.42.36.500	36	1000	500	10	20	1.5	56	25	61	50	24.5

Roller insert without collar
Roller insert with collar



2198.34.

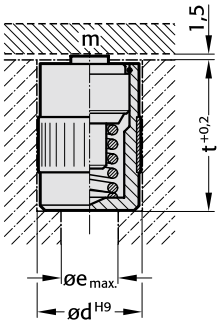

Note:
Roller inserts provide double the capacity of ball bearing inserts.

Torsion protection is provided by the customer.

2198.34. Roller insert without collar

Order No	d	Load capacity m [daN]	Roller diameter	e	t
2198.34.020	20	50	10	10	30
2198.34.024	24	80	13	14	38
2198.34.030	30	125	16	20	44
2198.34.040	40	200	19	30	53



2198.35.

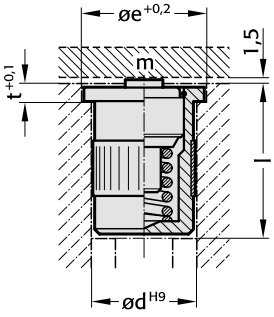

Note:
Roller inserts provide double the capacity of ball bearing inserts.

Torsion protection is provided by the customer.

2198.35. Roller insert with collar

Order No	d	Load capacity m [daN]	Roller diameter	e	t	l
2198.35.020	20	50	10	25	3.5	31
2198.35.024	24	80	13	30	4	39
2198.35.030	30	125	16	35	5	45
2198.35.040	40	200	19	50	6	54

Roller rail

2198.44.

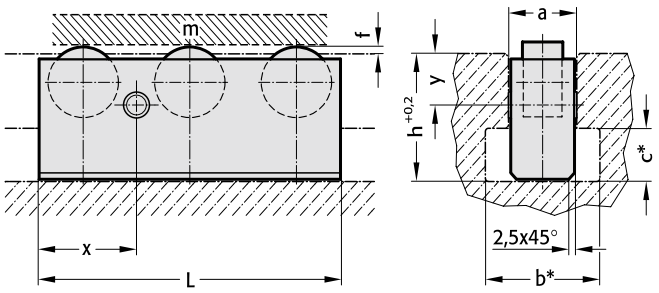



2198.44. Roller rail

Order No	a	Load capacity m [daN]	L	Number of rollers	Roller diameter	f	b*	c*	h	x	y
2198.44.18.105	18	150	105	3	10	1.5	30	12	30	35	14.5
2198.44.18.140	18	200	140	4	10	1.5	30	12	30	35	14.5
2198.44.18.175	18	250	175	5	10	1.5	30	12	30	35	14.5
2198.44.18.210	18	300	210	6	10	1.5	30	12	30	35	14.5
2198.44.18.280	18	400	280	8	10	1.5	30	12	30	35	14.5
2198.44.18.350	18	500	350	10	10	1.5	30	12	30	35	14.5
2198.44.22.120	22	240	120	3	13	1.5	37	16	38	40	14.5
2198.44.22.160	22	320	160	4	13	1.5	37	16	38	40	14.5
2198.44.22.200	22	400	200	5	13	1.5	37	16	38	40	14.5
2198.44.22.240	22	480	240	6	13	1.5	37	16	38	40	14.5
2198.44.22.320	22	640	320	8	13	1.5	37	16	38	40	14.5
2198.44.22.400	22	800	400	10	13	1.5	37	16	38	40	14.5
2198.44.28.135	28	380	135	3	16	1.5	46	20	48	45	19
2198.44.28.180	28	500	180	4	16	1.5	46	20	48	45	19
2198.44.28.225	28	630	225	5	16	1.5	46	20	48	45	19
2198.44.28.270	28	750	270	6	16	1.5	46	20	48	45	19
2198.44.28.360	28	1000	360	8	16	1.5	46	20	48	45	19
2198.44.28.450	28	1250	450	10	16	1.5	46	20	48	45	19
2198.44.36.150	36	600	150	3	19	1.5	56	25	61	50	24.5
2198.44.36.200	36	800	200	4	19	1.5	56	25	61	50	24.5
2198.44.36.250	36	1000	250	5	19	1.5	56	25	61	50	24.5
2198.44.36.300	36	1200	300	6	19	1.5	56	25	61	50	24.5
2198.44.36.400	36	1600	400	8	19	1.5	56	25	61	50	24.5
2198.44.36.500	36	2000	500	10	19	1.5	56	25	61	50	24.5

Spring mounted rollers to VW Standard



2198.50.55.01 Execution 1

Material: Steel

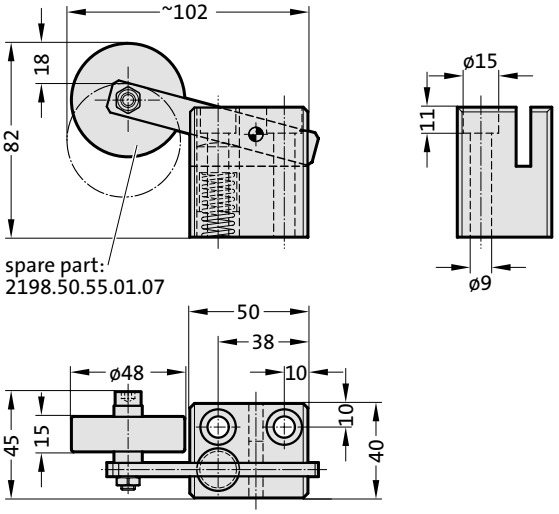

Note:
Screws not included.

Application:
For stabilizing the sheet-metal strip in the tool and at the coil entry.

Fixing:
Use socket cap screws DIN EN ISO 4762 M8.



2198.50.55.02 Execution 2

Material: Steel

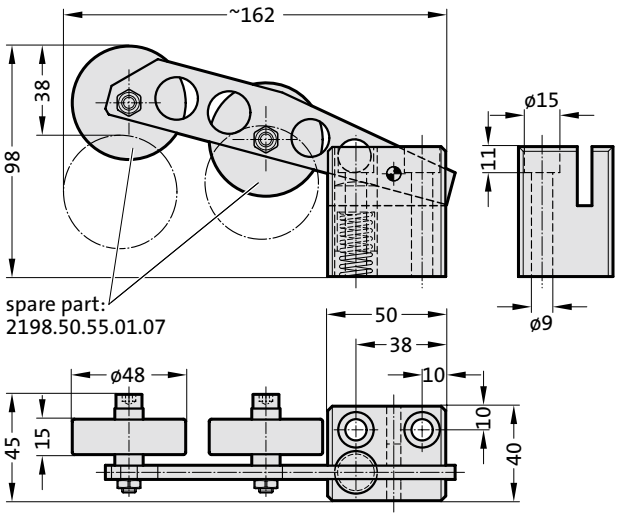

Note:
Screws not included.

Application:
For stabilizing the sheet-metal strip in the tool and at the coil entry.

Fixing:
Use socket cap screws DIN EN ISO 4762 M8.

Spring mounted rollers to VW Standard

2198.50.55.03 Execution 3

Material: Steel

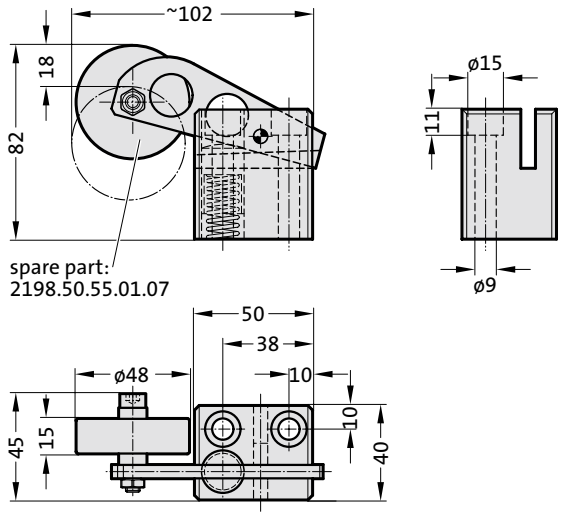



Note:
Screws not included.

Application:
For stabilizing the sheet-metal strip in the tool and at the coil entry.

Fixing:
Use socket cap screws DIN EN ISO 4762 M8.

2198.50.55.04 Execution 4

Material: Steel

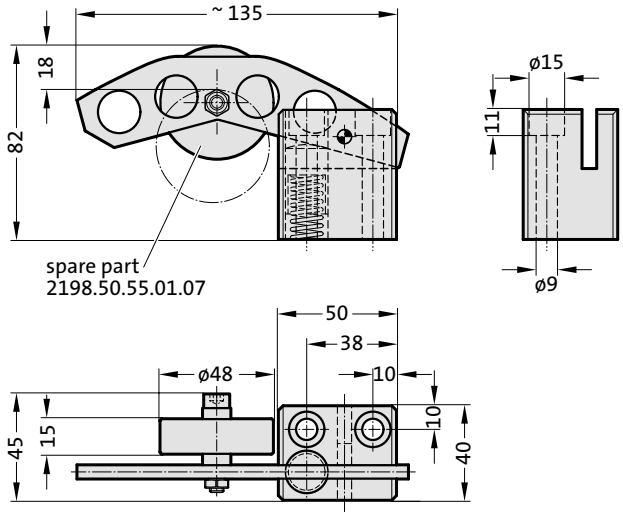



Note:
Screws not included.

Application:
For stabilizing the sheet-metal strip in the tool and at the coil entry.

Fixing:
Use socket cap screws DIN EN ISO 4762 M8.

Counter view, mechanical



3710.12.01

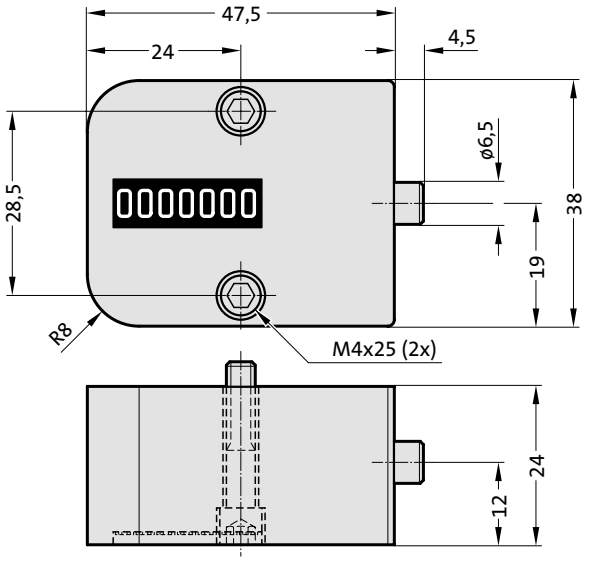

Description:

- monitors the productivity of a moulding tool

Note:

- max. operational temperature 120 °C
- seven digit display, non-resettable, allows recording up to 10 million cycles
- splash resistant, corrosion resistant
- incl. mounting screws M4x25

Installation into mould parting surface with 2 cylinder screws M4 x 25 DIN EN ISO 4762.

- An installation in the mould parting surface provides a good reading of the counted values.

Patent

3710.12.01 Counter view, mechanical

Mounting example

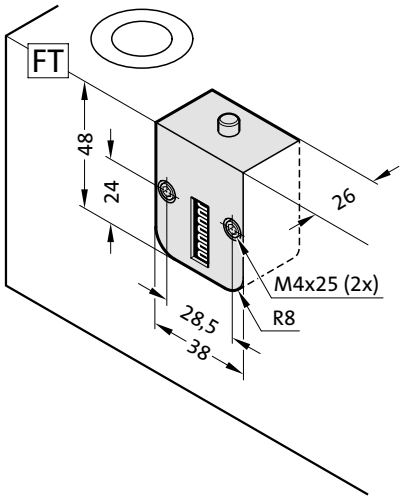

subject to alterations

Installation frame for counter view

3710.00.12.01

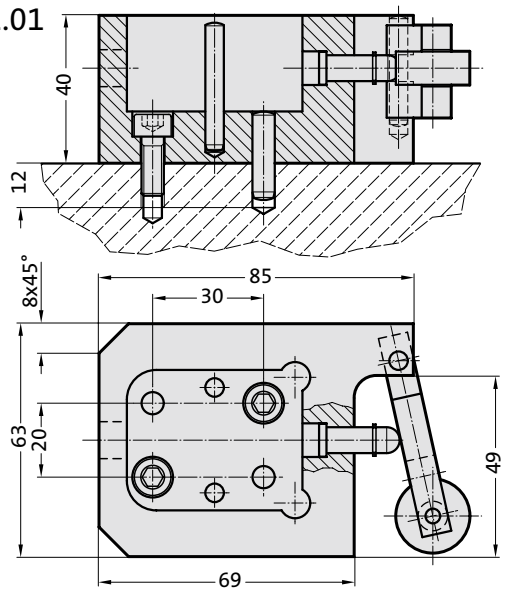



3710.00.12.01 Installation frame for counter view

Note:

Fasten the installation frame on the tool, then insert the counter view.
Delivery includes:
2 socket head cap screws M6x16 to DIN EN ISO 4762 and 2 precision parallel pins 2351.0600.024

Attention:

After installing the counter view into the installation frame, disassembly is no longer possible (manipulation proof).

Mounting example

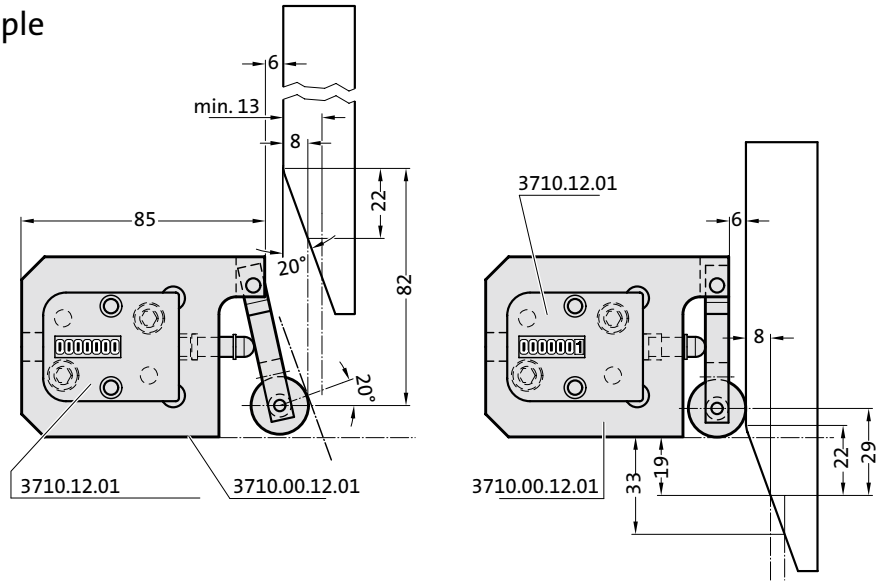



Electrically controlled Conveyor belts

Conveyor belts, electrically controlled
Description and ordering guidelines

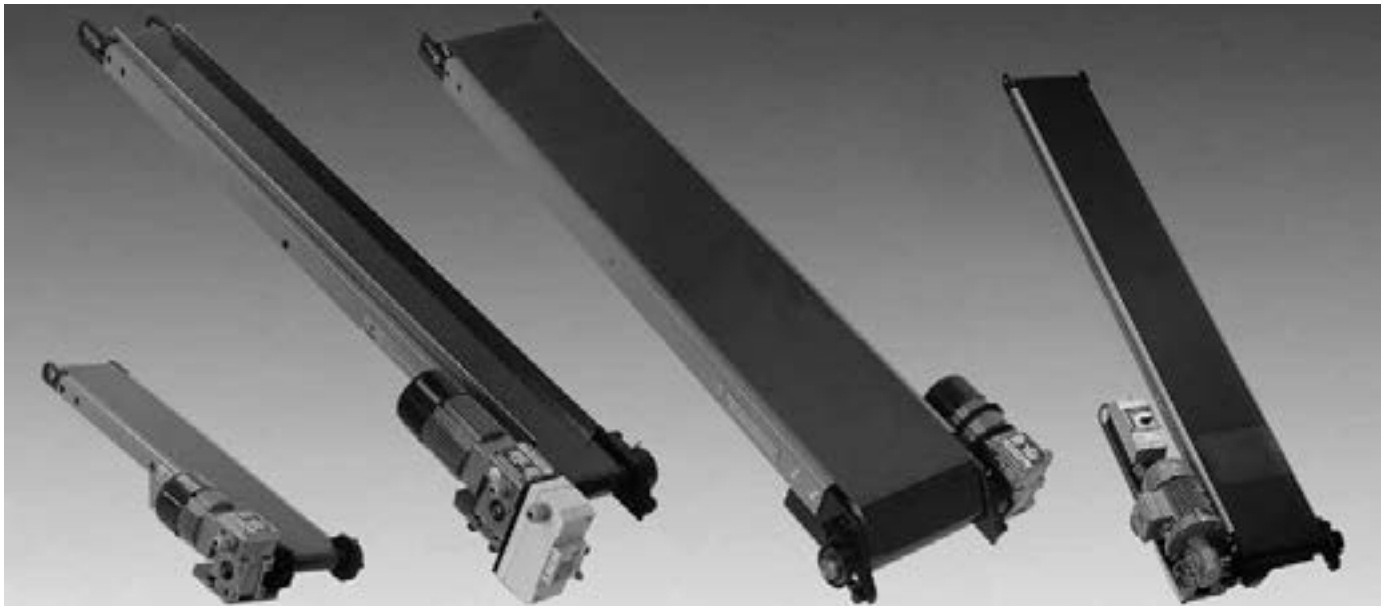

Belt speed:

The standard speed is 5,5 m/min.
Speeds of 2,7–7,5–11–20 m/min are available on request.

5,5	m/min.	Code	1
2,7	m/min.	Code	2
7,5	m/min.	Code	3
11	m/min.	Code	4
20	m/min.	Code	5

An electrical controller enables the belt speed to be set to between

0,02	–10 m/min. (Types 302 and 402 only)	Code	6 3	6 4
10	–20 m/min.	Code	7 3	7 4
20	–30 m/min.	Code	8 3	8 4
0,02	–30 m/min. (Types 302 and 402 only)	Code	9 3	9 4
with limited control precision.			230 V AC 1-ph.	400 V AC 3-ph.

Motors: (supply voltage)

Single-phase-motor 230 V–50 HZ	Code	1
Three-phase-motor 230 V–50 HZ (star delta control)	Code	2
Three-phase-motor 400 V–50 HZ	Code	3

Motor position with gearbox:

Motor axis horizontal relative to direction of belt travel, right	Code	1
Motor axis horizontal relative to direction of belt travel, left	Code	2
Motor axis vertical relative to direction of belt travel, right, above	Code	3
Motor axis vertical relative to direction of belt travel, right, below	Code	4
Motor axis vertical relative to direction of belt travel, left, above	Code	5
Motor axis vertical relative to direction of belt travel, left, below	Code	6

Controller:

Excluding electrical installation	Code	0
With manual ON/OFF switch and motor circuit-breaker	Code	1
With manual ON/OFF switch and motor circuit-breaker, additional emergency stop switch and 3 m cable with IEC 309 plug connector.	Code	2
Fittings as for 2 + Motor frequency controller to regulate the belt speed, 230 V AC, single phased, with IEC 309 plug connector.	Code	3
Fittings as for 2 + Motor frequency controller to regulate the belt speed, 400 V AC, three phased, with IEC 309 plug connector.	Code	4

Description:

The conveyor belts are used to move parts and waste out of the press. They are suitable for any other application involving the movement of parts or waste.

The belt consists of a woven glass fibre fabric with a polyurethane coating.

The drives are designed for both continuous and intermittent operation.

Accessories:

Delimiting guides, loss prevention and stands (see following pages) only in conjunction with a conveyor belt order.

Conveyor belt, electrically controlled

2195.301.

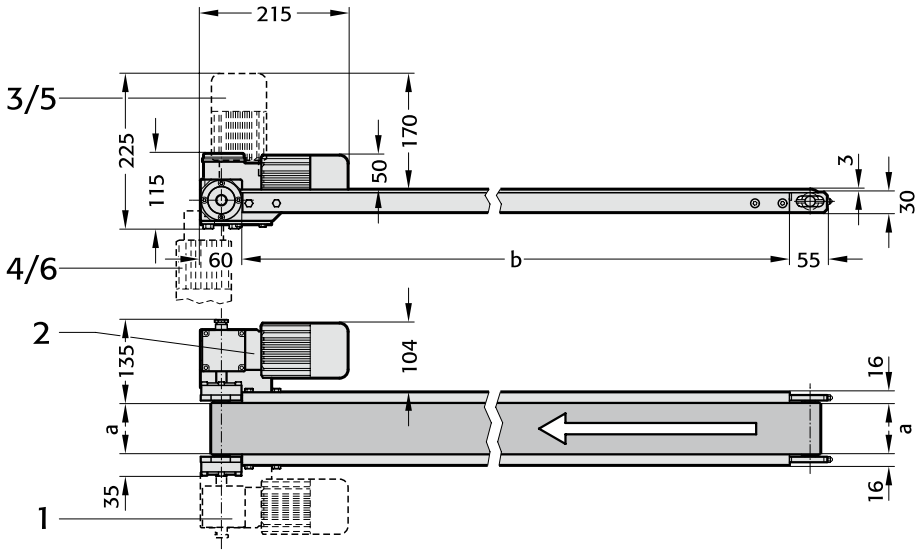

2195.301. Conveyor belt, electrically controlled

a	b 500	750	1000	1250	1500	1750	2000	2250	2500	2750	3000	3250	3500	3750	4000
030	●	●	●	●	●	●	●	●	●						
050	●	●	●	●	●	●	●	●	●						
075	●	●	●	●	●	●	●								
100	●	●	●	●	●	●	●								
125	●	●	●	●	●										
150	●	●	●	●	●										
175	●	●	●	●											
200	●	●	●	●											
225	●	●	●												
250	●	●	●												
275	●	●													
300	●	●													

Belt load:

Belt width a	kg per meter conveyed
30– 50– 75	4
100–125–150	7
175–200–225	10
250–275–300	15

For more information refer to description and ordering guidelines.

Ordering Code (example):

Conveyor belt		=	2195.
Typ 301		=	301.
Belt width	a = 100 mm	=	100.
Nominal belt length	b = 1750 mm	=	1750.
Belt speed		=	1
Motor voltage 400 V		=	3
Motor position		=	1
Motor controller		=	1
Order No		=	2195.301.100.1750.1311

subject to alterations

Conveyor belt, electrically controlled

2195.302.

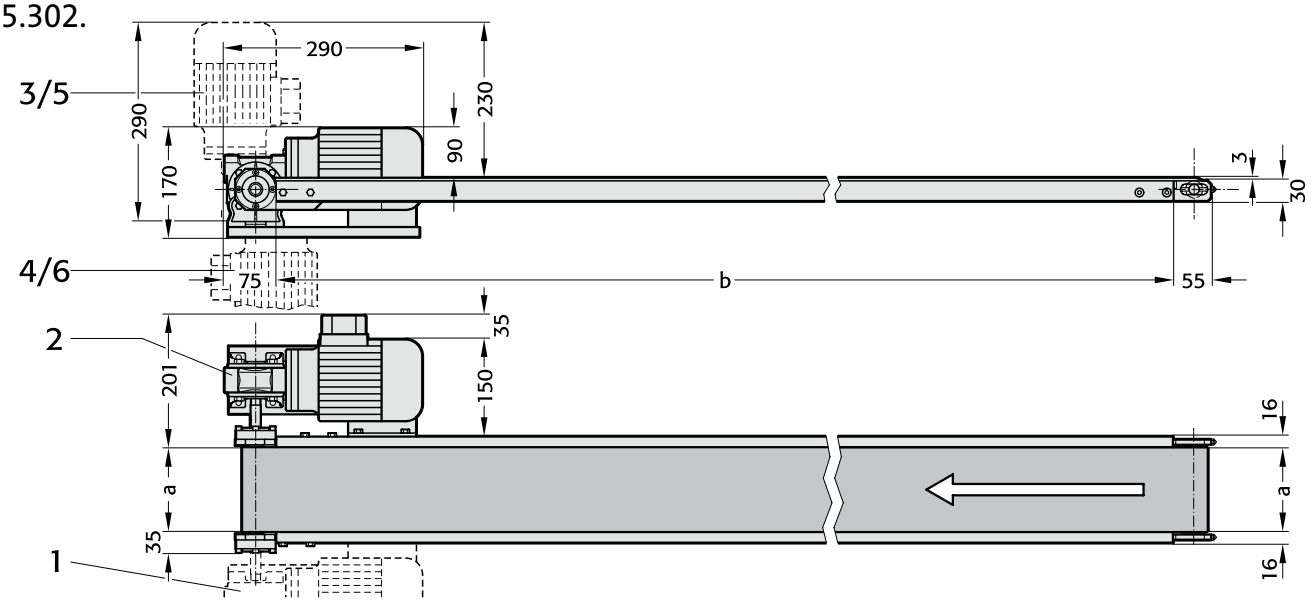

2195.302. Conveyor belt, electrically controlled

a	b	500	750	1000	1250	1500	1750	2000	2250	2500	2750	3000	3250	3500	3750	4000
030											●	●	●	●	●	●
050											●	●	●	●	●	●
075									●	●	●	●	●	●	●	●
100									●	●	●	●	●	●	●	●
125							●	●	●	●	●	●	●	●	●	
150							●	●	●	●	●	●	●	●	●	
175						●	●	●	●	●	●	●				
200						●	●	●	●	●	●	●				
225					●	●	●	●	●	●	●					
250					●	●	●	●	●	●	●					
275				●	●	●	●	●	●	●						
300				●	●	●	●	●	●	●						

Belt load:

Belt width a	kg per meter conveyed
30– 50– 75	4
100–125–150	7
175–200–225	10
250–275–300	15

For more information refer to description and ordering guidelines.

Ordering Code (example):

Conveyor belt		= 2195.
Typ 302		= 302.
Belt width	a = 100 mm	= 100.
Nominal belt length	b = 2500 mm	= 2500.
Belt speed		= 1
Motor voltage 400 V		= 3
Motor position		= 1
Motor controller		= 1
Order No		= 2195.302.100.2500.1311

Conveyor belt, electrically controlled

2195.401.

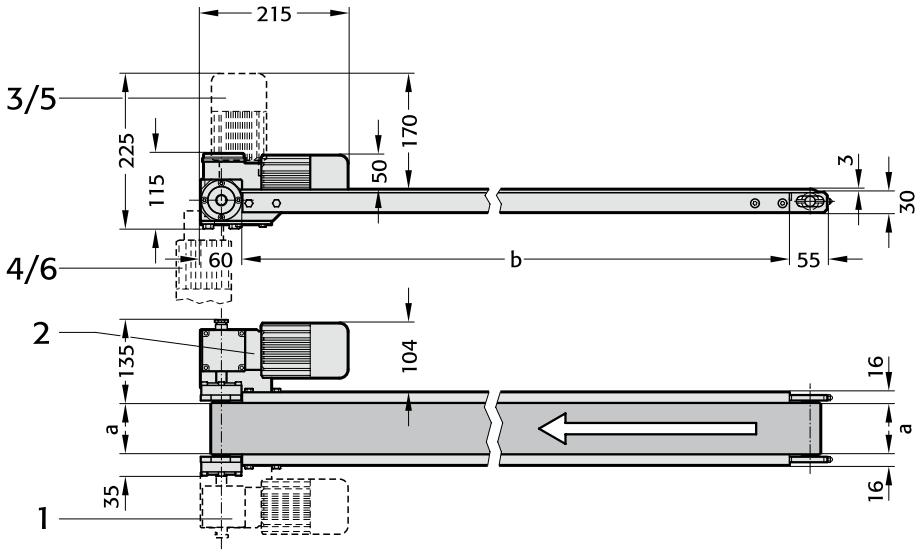

2195.401. Conveyor belt, electrically controlled

a	b 500	750	1000	1250	1500	1750	2000	2250	2500	2750	3000	3250	3500	3750	4000
030	●	●	●	●	●	●	●	●	●						
050	●	●	●	●	●	●	●	●	●						
075	●	●	●	●	●	●	●								
100	●	●	●	●	●	●	●								
125	●	●	●	●	●	●									
150	●	●	●	●	●	●									
175	●	●	●	●	●										
200	●	●	●	●	●										
225	●	●	●	●											
250	●	●	●	●											
275	●	●	●												
300	●	●	●												

Belt load:

Belt width a	kg per meter conveyed
30– 50– 75	5
100–125–150	10
175–200–225	14
250–275–300	17

For more information refer to description and ordering guidelines.

Ordering Code (example):

Conveyor belt		= 2195.
Typ 401		= 401.
Belt width	a = 100 mm	= 100.
Nominal belt length	b = 1750 mm	= 1750.
Belt speed		= 1
Motor voltage 400 V		= 3
Motor position		= 1
Motor controller		= 1
Order No		= 2195.401.100.1750.1311

subject to alterations

Conveyor belt, electrically controlled

2195.402.

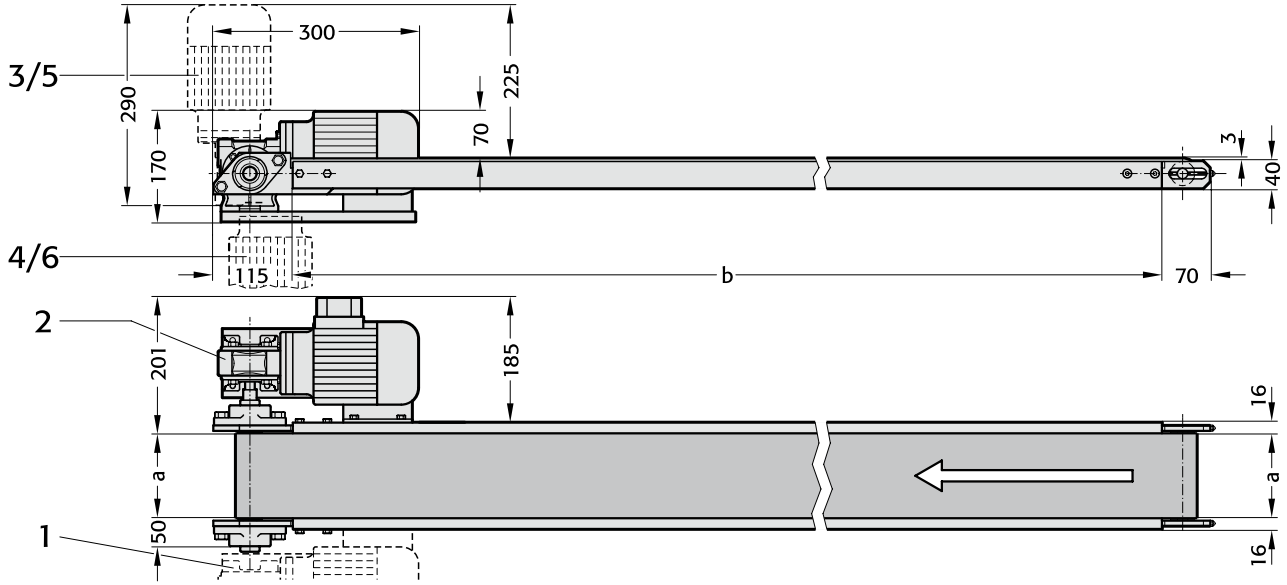

2195.402. Conveyor belt, electrically controlled

a	b 500	750	1000	1250	1500	1750	2000	2250	2500	2750	3000	3250	3500	3750	4000
030										●	●	●	●	●	●
050										●	●	●	●	●	●
075								●	●	●	●	●	●	●	
100								●	●	●	●	●	●	●	
125							●	●	●	●	●	●	●		
150							●	●	●	●	●	●	●		
175						●	●	●	●	●	●				
200						●	●	●	●	●	●				
225					●	●	●	●	●	●	●				
250					●	●	●	●	●	●	●				
275				●	●	●	●	●	●	●					
300				●	●	●	●	●	●	●					
350	●	●	●	●	●	●	●	●	●						
400	●	●	●	●	●	●	●	●	●						
450	●	●	●	●	●	●	●	●							
500	●	●	●	●	●	●	●	●							

Belt load:

Belt width a	kg per meter conveyed
30– 50– 75	5
100–125–150	10
175–200–225	14
250–275–300	17
350–400–450	20
500	24

For more information refer to description and ordering guidelines.

Ordering Code (example):

Conveyor belt		= 2195.
Typ 402		= 402.
Belt width	a = 100 mm	= 100.
Nominal belt length	b = 2500 mm	= 2500.
Belt speed		= 1
Motor voltage 400 V		= 3
Motor position		= 1
Motor controller		= 1
Order No		= 2195.402.100.2500.1311

Delimiting guide for conveyor belt

2195.114.

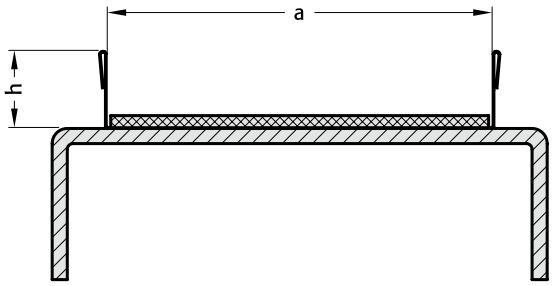

Note:

Only in conjunction with a conveyor belt order.

Delimiting guide for conveyor belt

Description:

Delimiting guide made of stainless steel
h = 15 - 100 mm (in 5 mm increments)

Ordering Code (example):

Conveyor belt		=	2195.
Delimiting guide type		=	114.
Guide height	h = 15 mm	=	015.
Belt width	a = 100 mm	=	100.
Frame length	b = 1500 mm	=	1500
Order No		=	2195.114.015.100.1500

2195.115.

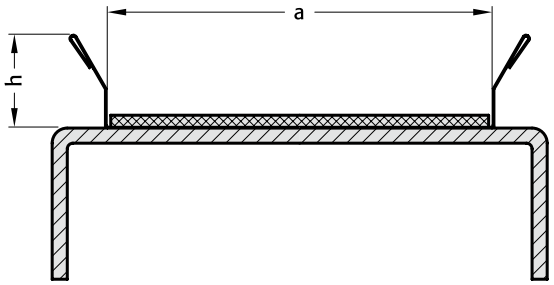

Note:

Only in conjunction with a conveyor belt order.

Delimiting guide for conveyor belt

Description:

Delimiting guide made of stainless steel
h = 25 - 100 mm (in 5 mm increments)

Ordering Code (example):

Conveyor belt		=	2195.
Delimiting guide type		=	115.
Guide height	h = 25 mm	=	025.
Belt width	a = 150 mm	=	150.
Frame length	b = 1500 mm	=	1500
Order No		=	2195.115.025.150.1500

2195.116.

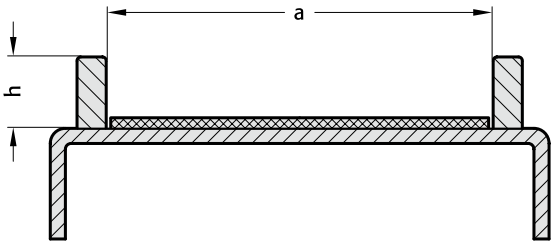

Note:

Only in conjunction with a conveyor belt order.

Delimiting guide for conveyor belt

Description:

Conveyor edge rails of steel, brazed
h = 10 - 100 mm (in 5 mm increments)

Ordering Code (example):

Conveyor belt		=	2195.
Delimiting guide type		=	116.
Guide height	h = 10 mm	=	010.
Belt width	a = 100 mm	=	100.
Frame length	b = 1500 mm	=	1500
Order No		=	2195.116.010.100.1500

2195.117.

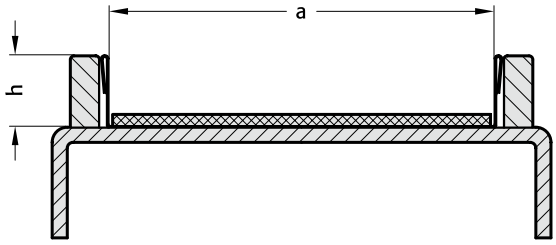

Note:

Only in conjunction with a conveyor belt order.

Delimiting guide for conveyor belt

Description:

Trough conveyor edge rails of stainless steel,
with brazed on steel reinforcement walls
h = 15 - 100 mm (in 5 mm increments)

Ordering Code (example):

Conveyor belt		=	2195.
Delimiting guide type		=	117.
Guide height	h = 15 mm	=	015.
Belt width	a = 100 mm	=	100.
Frame length	b = 1500 mm	=	1500
Order No		=	2195.117.015.100.1500

Delimiting guide for conveyor belt with loss prevention

Delimiting guide for conveyor belt with loss prevention

2195.218.

Installation example:

with profile on conveyor edge rail 2195.114.
with loss prevention.
h = 25 - 50 mm (in 5 mm increments)

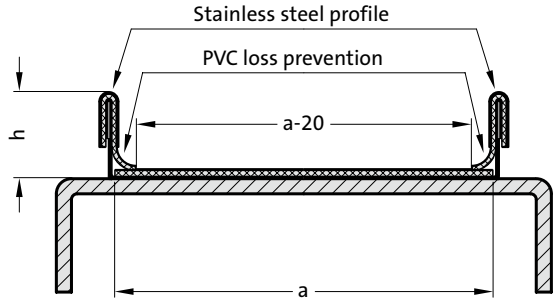

Ordering Code (example):

Conveyor belt		= 2195.	
Delimiting guide type 114 with loss prevention type 218		= 218.	
Guide height	h = 25 mm	= 025.	
Belt width	a = 150 mm	= 150.	
Frame length	b = 1500 mm	=	1500
Order No		= 2195.218.025.150.1500	

Delimiting guide for conveyor belts with loss prevention

2195.219.

Installation example:

with profile on conveyor edge rail 2195.115.
with loss prevention.
h = 25 - 50 mm (in 5 mm increments)

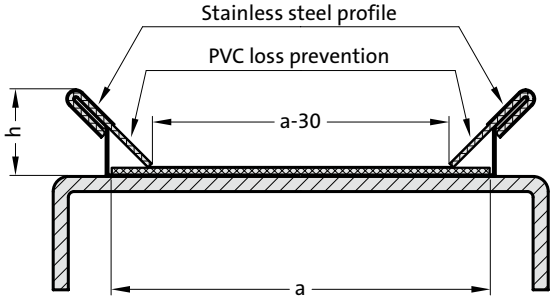

Ordering Code (example):

Conveyor belt		= 2195.	
Delimiting guide type 115 with loss prevention type 219		= 219.	
Guide height	h = 25 mm	= 025.	
Belt width	a = 150 mm	= 150.	
Frame length	b = 1500 mm	=	1500
Order No		= 2195.219.025.150.1500	

Delimiting guide for conveyor belt with loss prevention

2195.220.

Installation example:

with profile on conveyor edge rail 2195.114.
and longitudinal profile on edge of belt, with loss prevention.
h = 35 - 50 mm (in 5 mm increments)

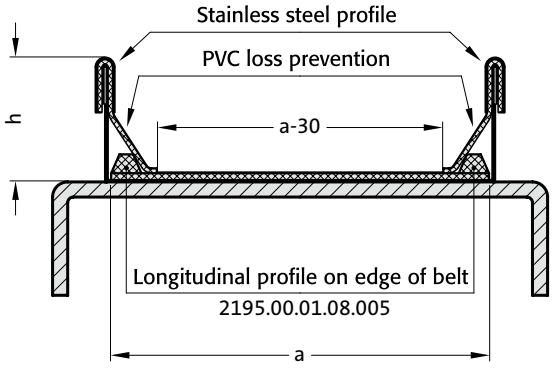

Ordering Code (example):

Conveyor belt		= 2195.	
Delimiting guide type 114 with loss prevention and longitudinal profile 2195.00.01.08.005		= 220.	
Guide height	h = 35 mm	= 035.	
Belt width	a = 150 mm	= 150.	
Frame length	b = 1500 mm	=	1500
Order No		= 2195.220.035.150.1500	

Delimiting guide for conveyor belt with loss prevention

2195.221.

Installation example:

with profile on conveyor edge rail 2195.115.
and longitudinal profile on edge of belt, with loss prevention.
h = 35 - 50 mm (in 5 mm increments)

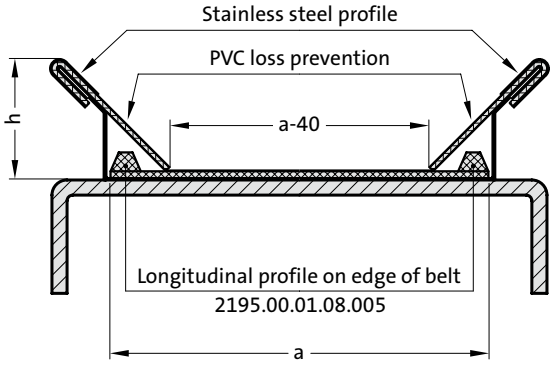

Ordering Code (example):

Conveyor belt		= 2195.	
Delimiting guide type 115 with loss prevention and longitudinal profile 2195.00.01.08.005		= 221.	
Guide height	h = 35 mm	= 035.	
Belt width	a = 150 mm	= 150.	
Frame length	b = 1500 mm	=	1500
Order No		= 2195.221.035.150.1500	

FIBRO

Stand for conveyor belt

Description:

Stand, tilting with adjustable feet .120.
Stand, tilting with adjustable castors .121.

h = height to customer's requirements, min. 450 mm
±20% h = adjustable height range

$a_{max.}$ = 350 mm
$b_{max.}$ = 2000 mm

Ordering Code (example):

Conveyor belt		= 2195.	
Stand with adjustable feet		=	120.
Height	h = 450 mm	=	0450.
Belt width	a = 350 mm	=	350
Order no		= 2195.120.0450.350	

2195.120./2195.121.

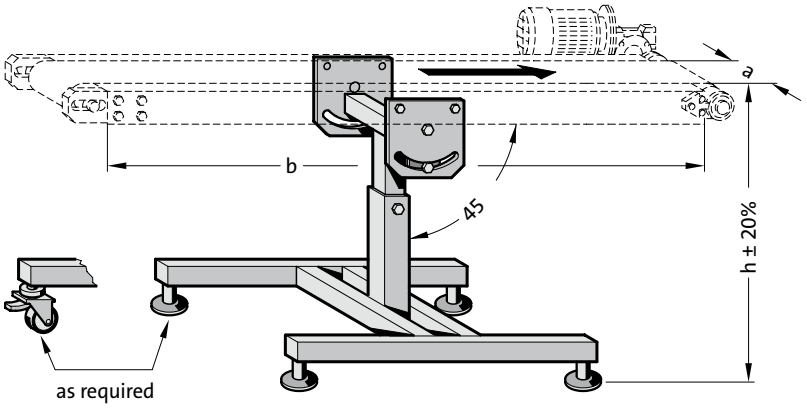

Description:

Table format with adjustable feet .130.
Table format with adjustable castors .131.

h = height to customer's requirements, min. 450 mm

For use with beltwidths a
For use with frame length b

Ordering Code (example):

Conveyor belt		= 2195.	
Stand with adjustable castors		=	131.
Height	h = 600 mm	=	0600.
Belt width	a = 350 mm	=	350.
Nominal belt length	b = 1000 mm	=	1000
Order no		= 2195.131.0600.350.1000	

2195.130./2195.131.

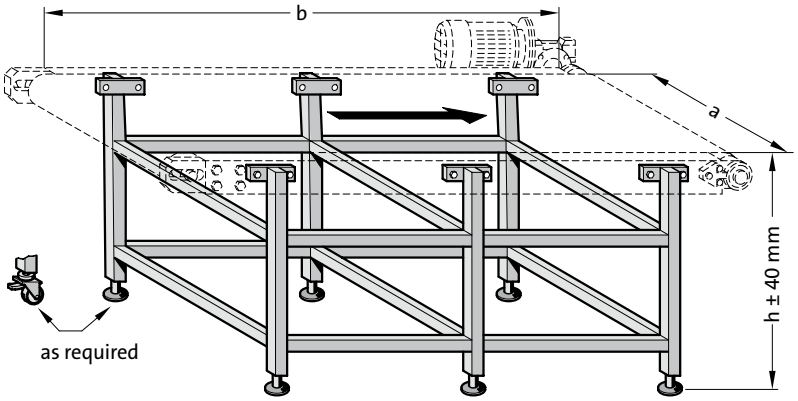

Description:

Stand, with adjustable feet .140.
Stand, with adjustable castors .141.

h = height to customer's requirements, min. 450 mm
±20% h = adjustable height range

$a_{max.}$ = 350 mm

Ordering Code (example):

Conveyor belt		= 2195.	
Stand with adjustable castors		=	141.
Height	h = 450 mm	=	0450.
Belt width	a = 350 mm	=	350
Order no		= 2195.141.0450.350	

2195.140./2195.141.

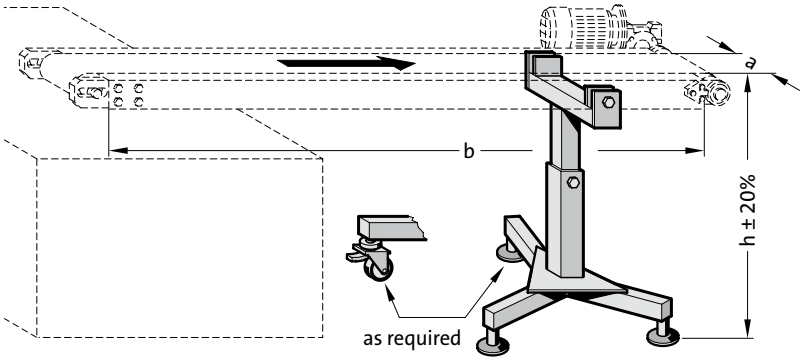

Description:

double adjustment with adjustable feet .150.
double adjustment with adjustable castors .151.

h = height to customer's requirements, min. 450 mm
±20% h = adjustable height range

$a_{max.}$ = 400 mm
$b_{max.}$ = 3000 mm

Ordering Code (example):

Conveyor belt		= 2195.	
Stand with adjustable castors		=	151.
Height	h = 450 mm	=	0450.
Belt width	a = 400 mm	=	400.
Nominal belt length	b = 3000 mm	=	3000
Order no		= 2195.151.0450.400.3000	

2195.150./2195.151.

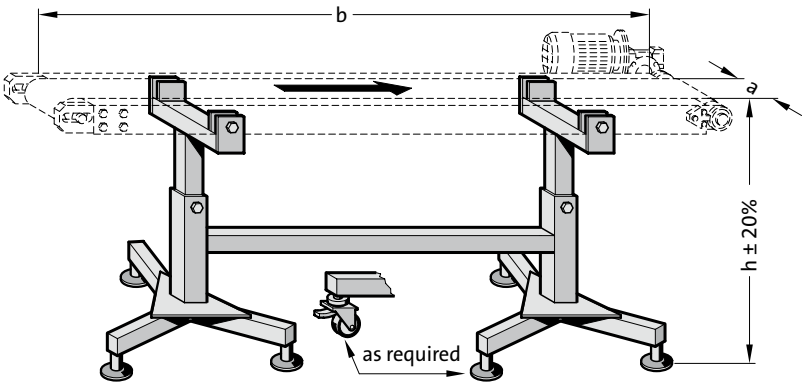

subject to alterations



Pneumatic conveyors

FIBRO

Pneumatic conveyors

Description

This pneumatic conveyor is unique and is patented. It was designed to provide an effective and affordable solution to the problems of conveying parts and disposing of waste.
This beltless system conveys stampings and waste from the tool area by vibration alone.

A specially designed guide channel which is screwed to the body of the conveyor vibrates rhythmically slowly forwards and fast backwards The mass inertia of the parts is used to move them forwards. In this way the parts in the guide channel progress
gently towards the storage containers.

The conveyor is maintenance-free and has a very low air consumption so is extremely economical in operation.
The pneumatic conveyor is quiet running and very user friendly.

The conveyor was originally designed for press room use but can be used as a conveyor with any tool. Blockages are a thing of
the past whether the conveyor is feeding parts for assembly or removing and disposing of stampings and waste parts.

Guides

We recommend three options for supporting a long guide channel:
1) Ball bearings 2) Roller supports 3) Sliding plain bearings

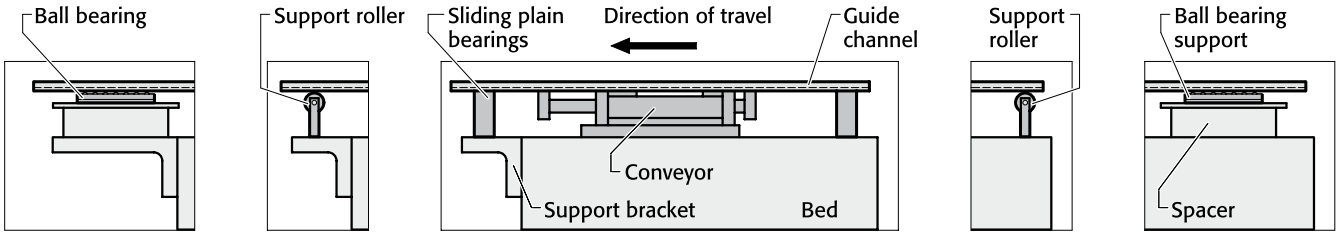

Technical data:

Modell	load, max. [kg]	air consumption [l/min.]	sound level [db-A]	stroke length [mm]	guide channel weight max. [kg]	despatch weight [kg]
2199.03	3	0,55	68	20	1,4	1,4
2199.10	10	1,25	68	25	2,7	2,8
2199.40	40	5,42	70	27	5,4	7,2
2199.70	70	5,42	70	27	11,3	5,5

1. Recommended rate of vibration: 120 per minute · 2. Speed of travel: 8 - 10 m / min. · 3. Operating pressure: 4 - 5.5 bar
4. Slope of guide channel: max. 8°

Note:

Do not exceed 5.5 bar as excess pressure will damage the transporter.
Additional protection for the transporter can be provided by including a service unit in the circuit.
This consists of a filter, pressure control valve and lubricator.

subject to alterations

Pneumatic conveyor

2199.03

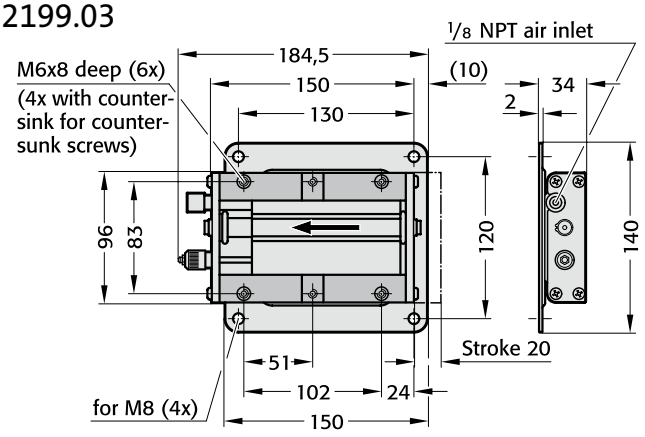



2199.10

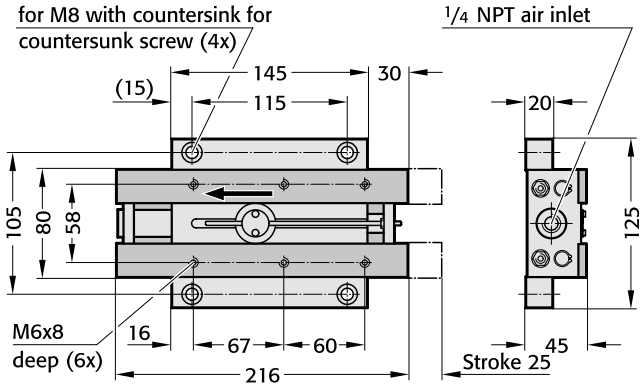



2199.40

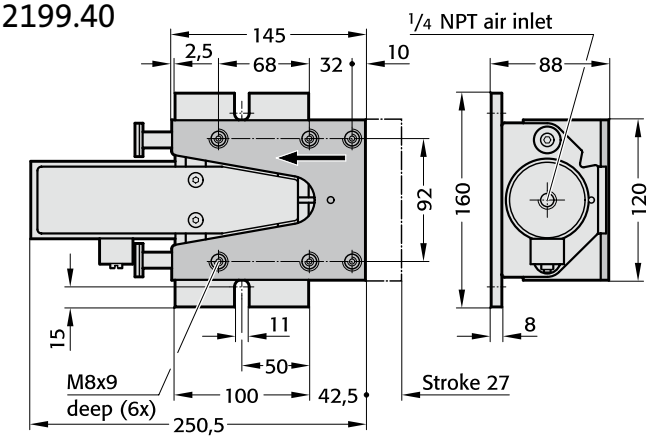

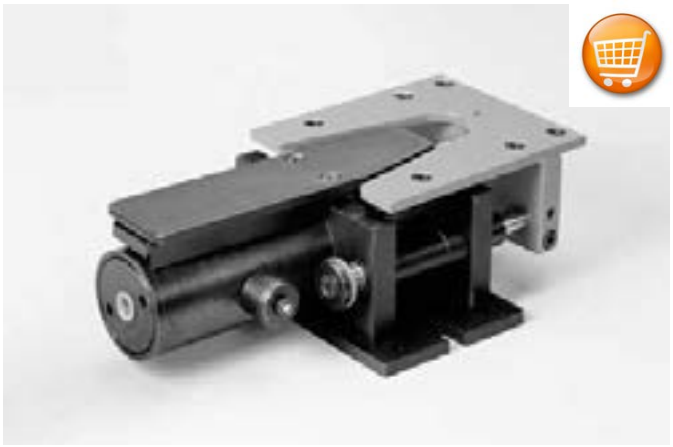

2199.70

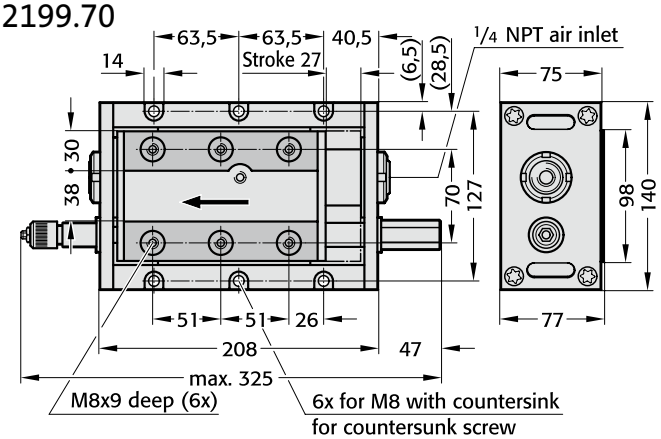

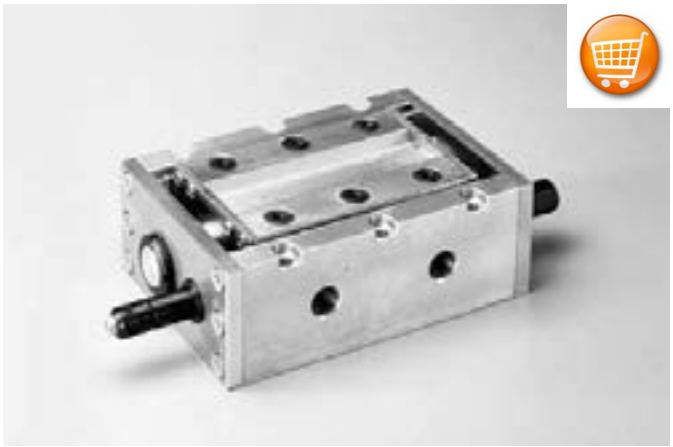

Pneumatic conveyors

2199.03/.10/.40/.70

How does the pneumatic conveyor work?

This compact pneumatic conveyor is driven by compressed air. The vibrating rhythmic motion conveys stampings and stamping waste whilst reducing your costs. Guide channels can be matched to any tool opening and used for sorting various types of waste.

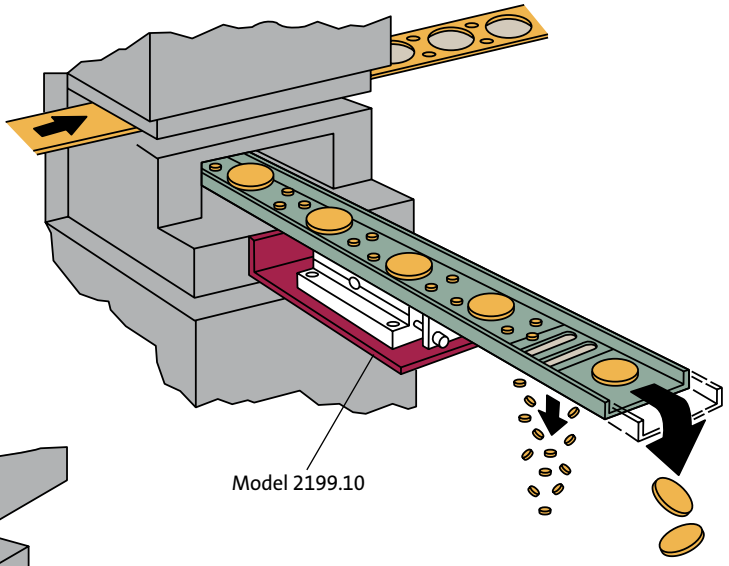

Model 2199.10

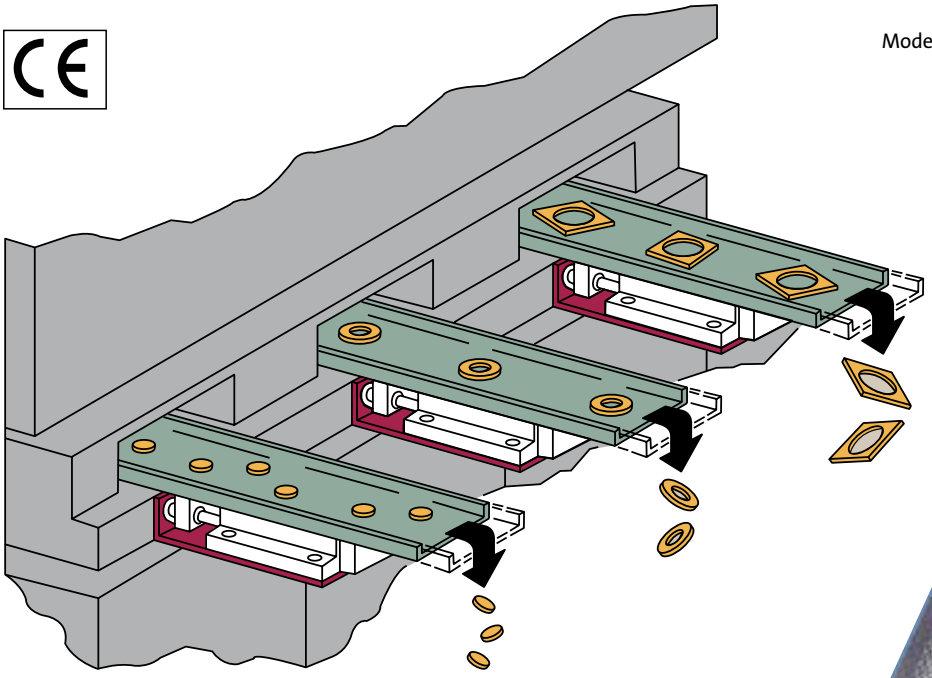

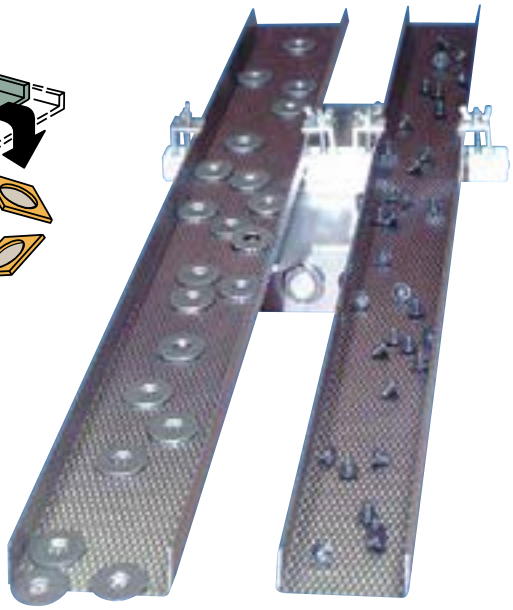

The guide channels are highly adaptable.

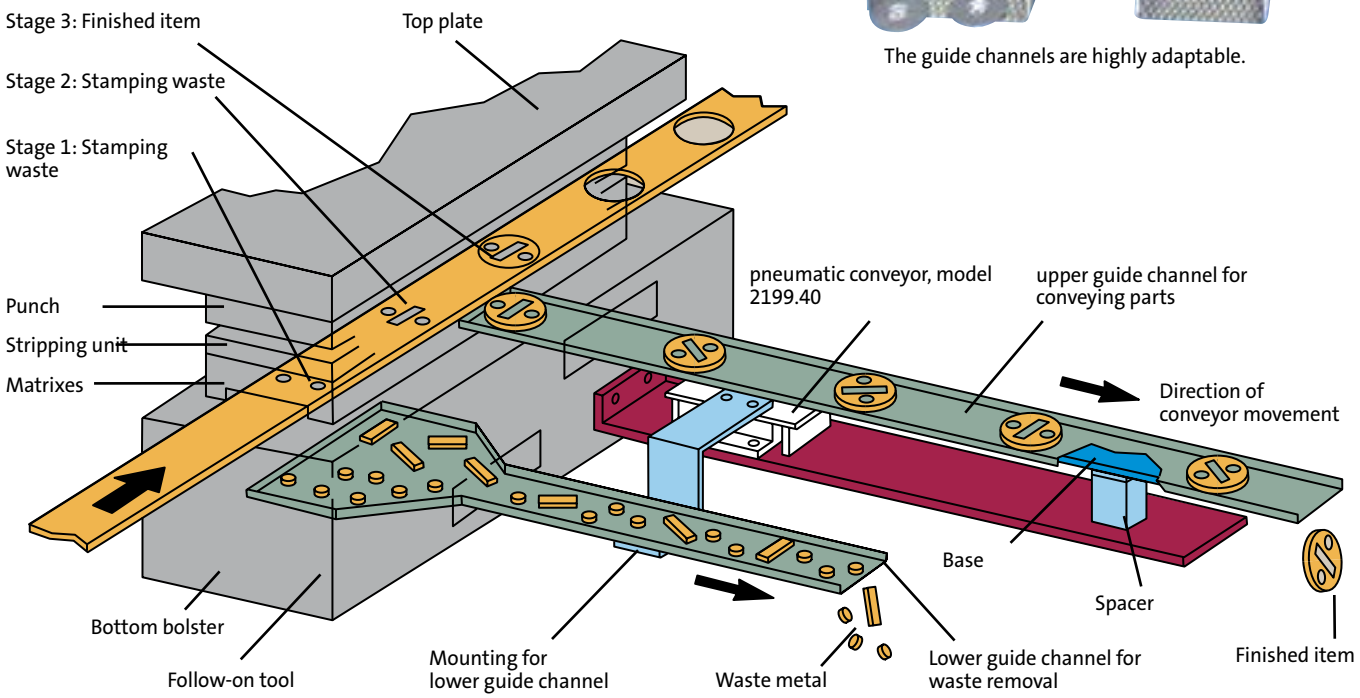



Electro-mechanical transporters

Electro-mechanical transporters
General Information

The FIBRO electro-mechanical transporters have been developed to effectively and inexpensively solve the problems of transporting parts and the removal of stamping and cutting residues from presses.

The principle behind the electro-mechanical transporter is the so-called „table cloth effect". The slow acceleration during the forward stroke pushes the parts or offcuts forwards. The fast return stroke of the guiding system results in a transport movement in only one direction.

Due to its compact design, the FIBRO electro-mechanical transporter is also suitable for applications where only limited space is available. The simple, sturdy and flexible design provides a safe, reliable, efficient and a cost efficient solution.

Basic advantages:

- compact design
- low maintenance
- low noise level (< 70 dB)

Designs:

2299.001 vertical gear position
2299.002 horizontal gear position
2299.011 vertical gear position, with profile and support
2299.012 horizontal gear position with profile and support
2299.121 vertical gear position, with two slides, profile and support
2299.122 horizontal gear position with two slides, profile and support
2299.221 vertical centre gear position, two slides, with profile and support
2299.222 horizontal centre gear position, two slides, with profile and support

Technical data:

Drive: Alternating current (3 phases) 1375 min-1
0.09 kW rated capacity
0.51 A nominal current at 400 V
Weight 4.4 kg
Protection class IP55 (DIN EN 60529)

Delivery stroke:
20 mm

Conveying speed:
approx. 4.5m/min

Stroke frequency:
4 strokes/second

max. guiding system weight (incl. profile):
35 kg

max. bulk weight (guiding system weight, profile, transport items):
100 kg

Temperature range (permissible ambient temperature):
-20 to +60 °C

Scope of delivery:

The transporters are supplied without connection cable.

Design data (CAD):

2D + 3D CAD data for various CAD systems as well as system-neutral interfaces are available on the internet at:

http://fibro.partserver.de







subject to alterations

Electro-mechanical transporter
vertical gear position
horizontal gear position

2299.001 vertical gear position

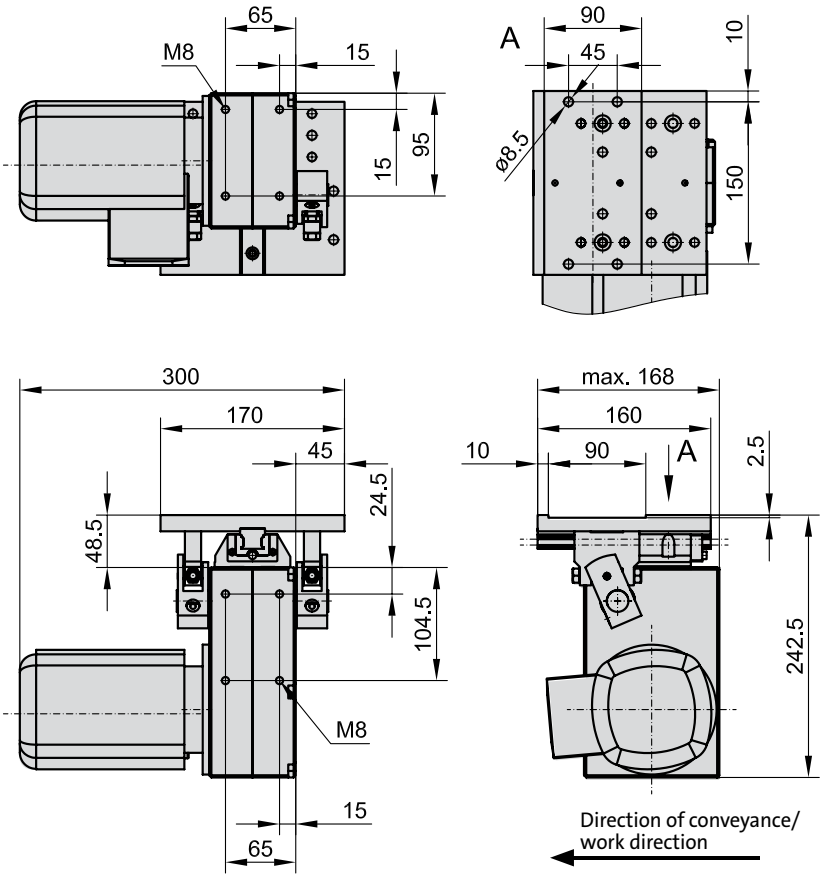

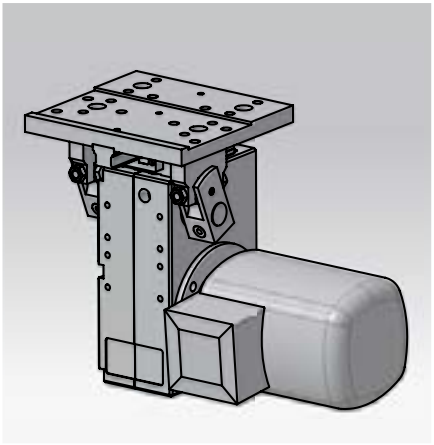

Note:

The transporter can be attached at two levels.

2299.002 horizontal gear position

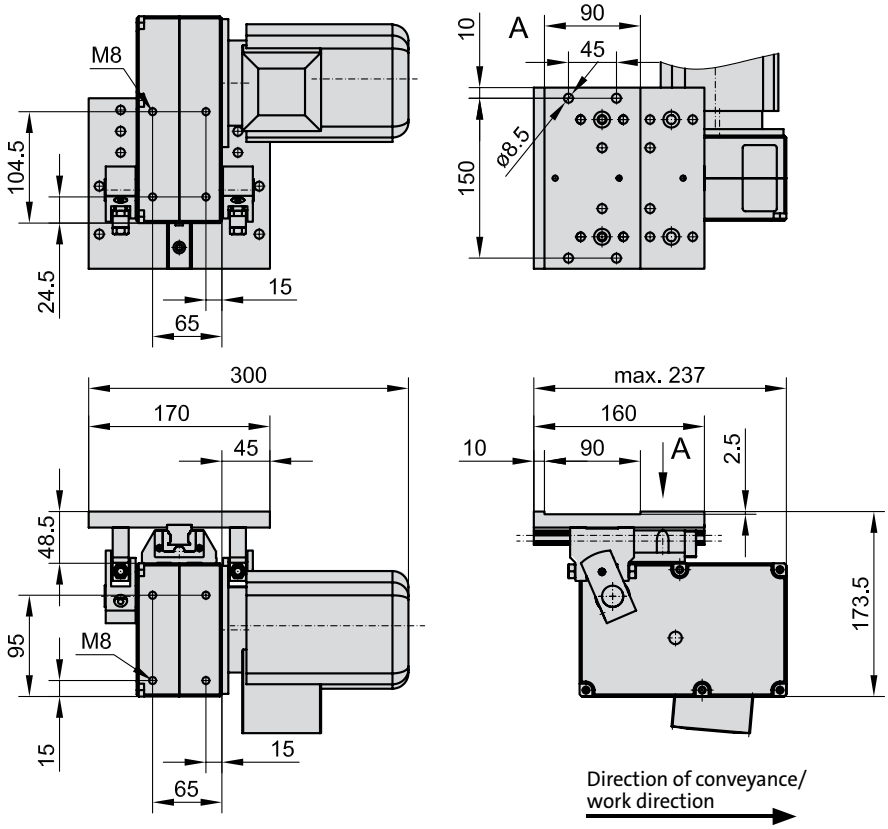

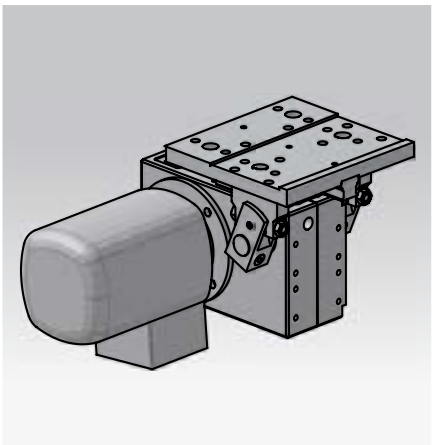

Note:

The transporter can be attached at two levels.

Electro-mechanical transporters
vertical gear position, with profile and support
horizontal gear position, with profile and support

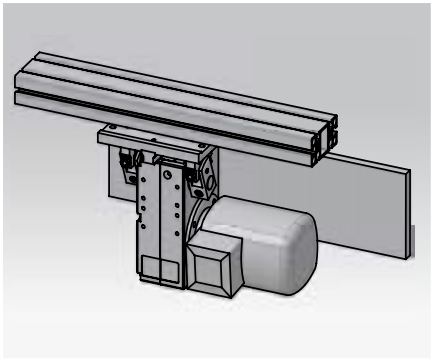

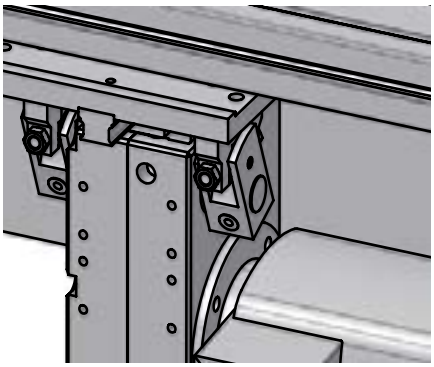

2299.011.

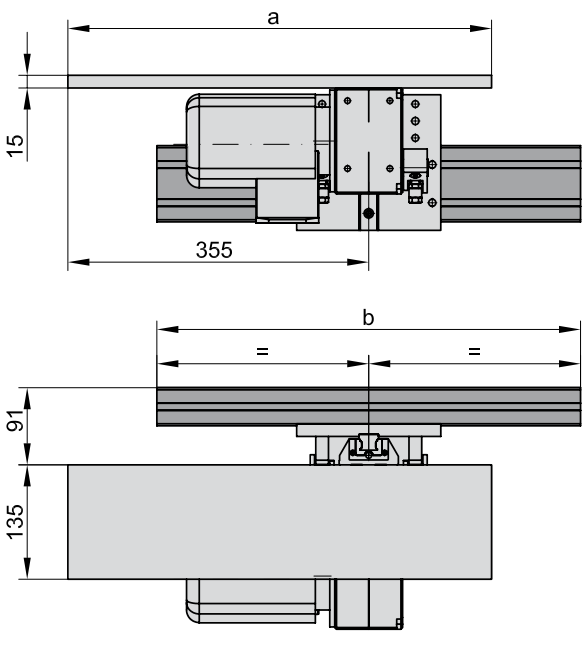

Ordering example:

Transporter	= 2299.
Type 011	= 011.
b = 1100 mm	= 1100.
a = 500 mm	= 0500
Order No	= 2299.011.1100.0500

2299.011. vertical gear position, with profile and support

b	500	600	700	800	900	1000	1100	1200
a								
500	●	●	●	●	●	●	●	●

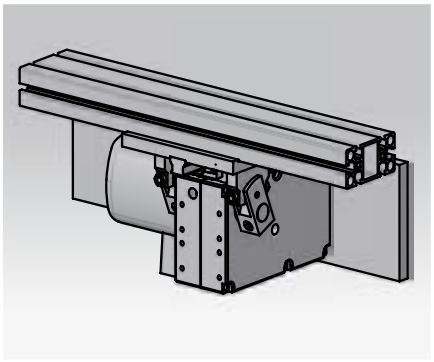

Profile cross-section

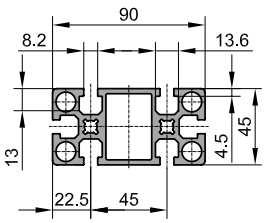

Suitable screw for T-slot
2140.30.08.08.□□

2299.012.

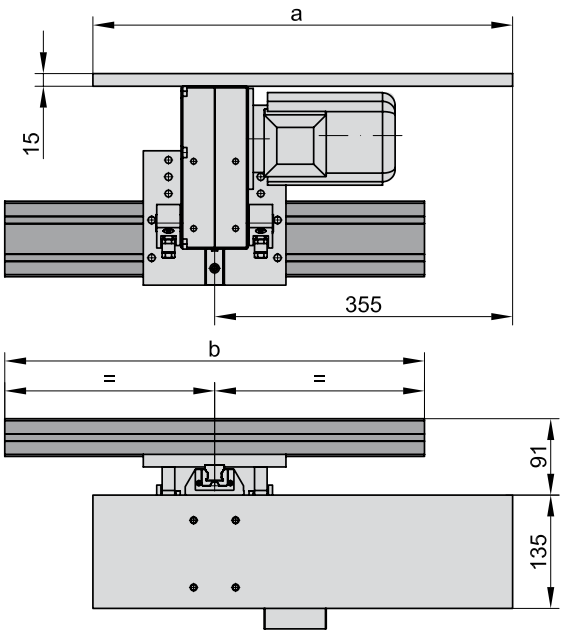

Ordering example:

Transporter	= 2299.
Type 012	= 012.
b = 1100 mm	= 1100.
a = 500 mm	= 0500
Order No	= 2299.012.1100.0500

2299.012. horizontal gear position, with profile and support

b	500	600	700	800	900	1000	1100	1200
a								
500	●	●	●	●	●	●	●	●

subject to alterations

Electro-mechanical transporters
vertical gear position, two slides, with profile and support
horizontal gear position, two slides, with profile and support

2299.121.

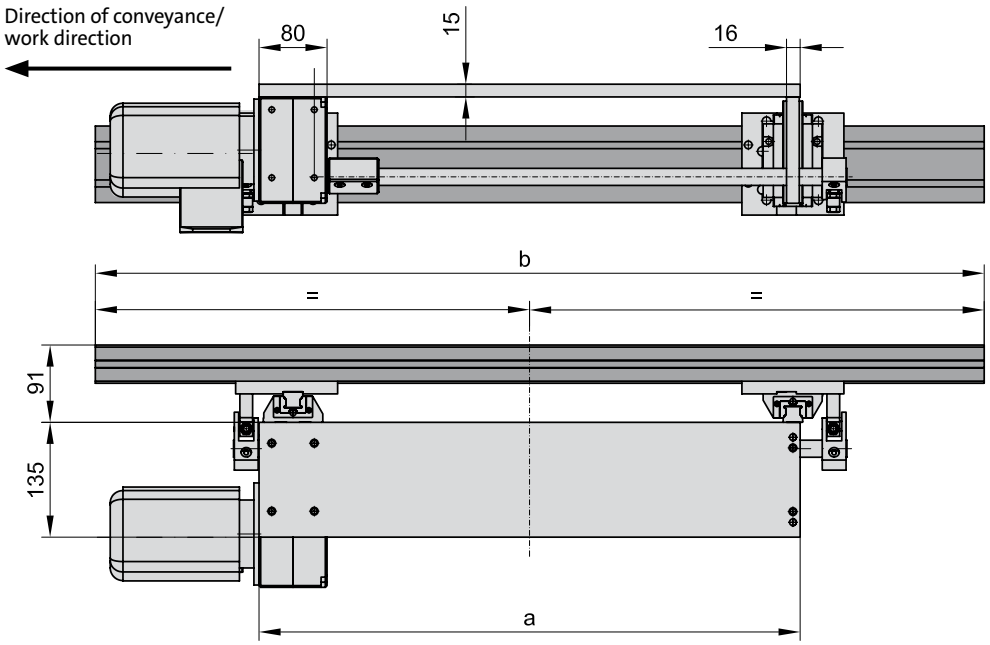

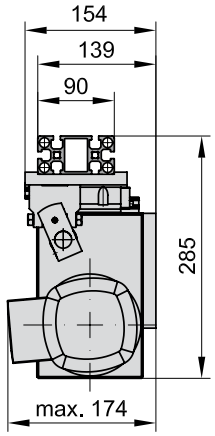

Ordering example:

Transporter	= 2299.	
Type 121	=	121.
b = 1400 mm	=	1400.
a = 900 mm	=	0900
Order No	= 2299.121.1400.0900	

2299.121. vertical gear position, two slides, with profile and support

b	1300	1400	1500	1600	1700	1800	1900	2000	2100	2200	2300	2400	2500	2600	2700	2800	2900	3000
a																		
900	●	●	●	●	●	●												
1200							●	●	●	●	●	●						
1500													●	●	●	●	●	●

2299.122.

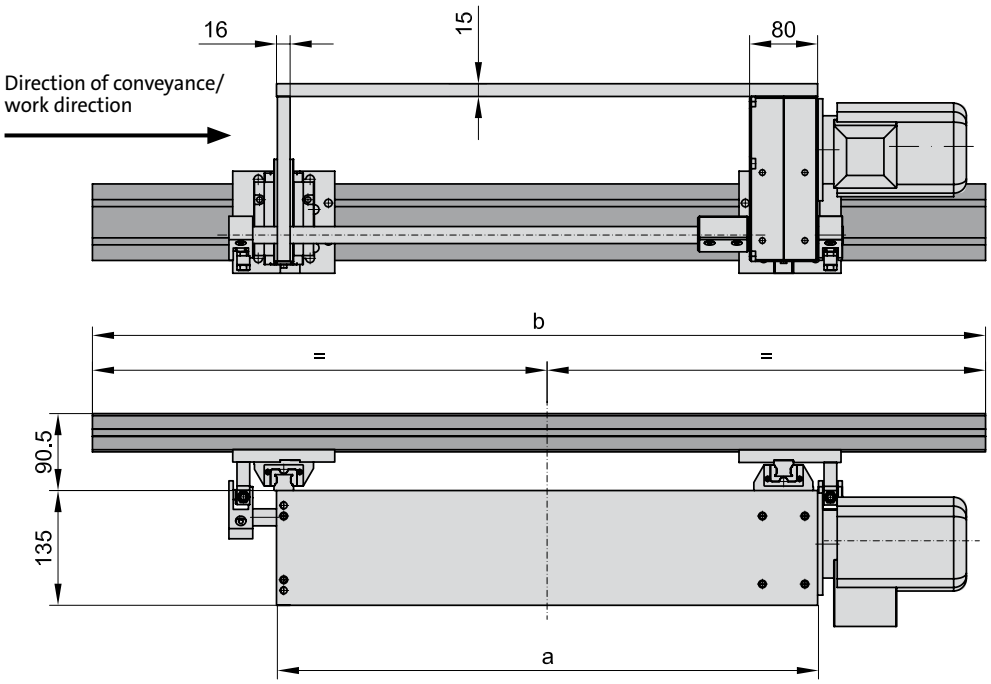

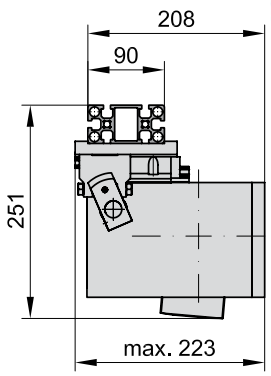

Ordering example:

Transporter	= 2299.	
Type 122	=	122.
b = 2200 mm	=	2200.
a = 1200 mm	=	1200
Order No	= 2299.122.2200.1200	

2299.122. horizontal gear position, two slides, with profile and support

b	1300	1400	1500	1600	1700	1800	1900	2000	2100	2200	2300	2400	2500	2600	2700	2800	2900	3000
a																		
900	●	●	●	●	●	●												
1200							●	●	●	●	●	●						
1500													●	●	●	●	●	●

Electro-mechanical transporters
vertical centre gear position, two slides, with profile and support
horizontal centre gear position, two slides, with profile and support

2299.221.

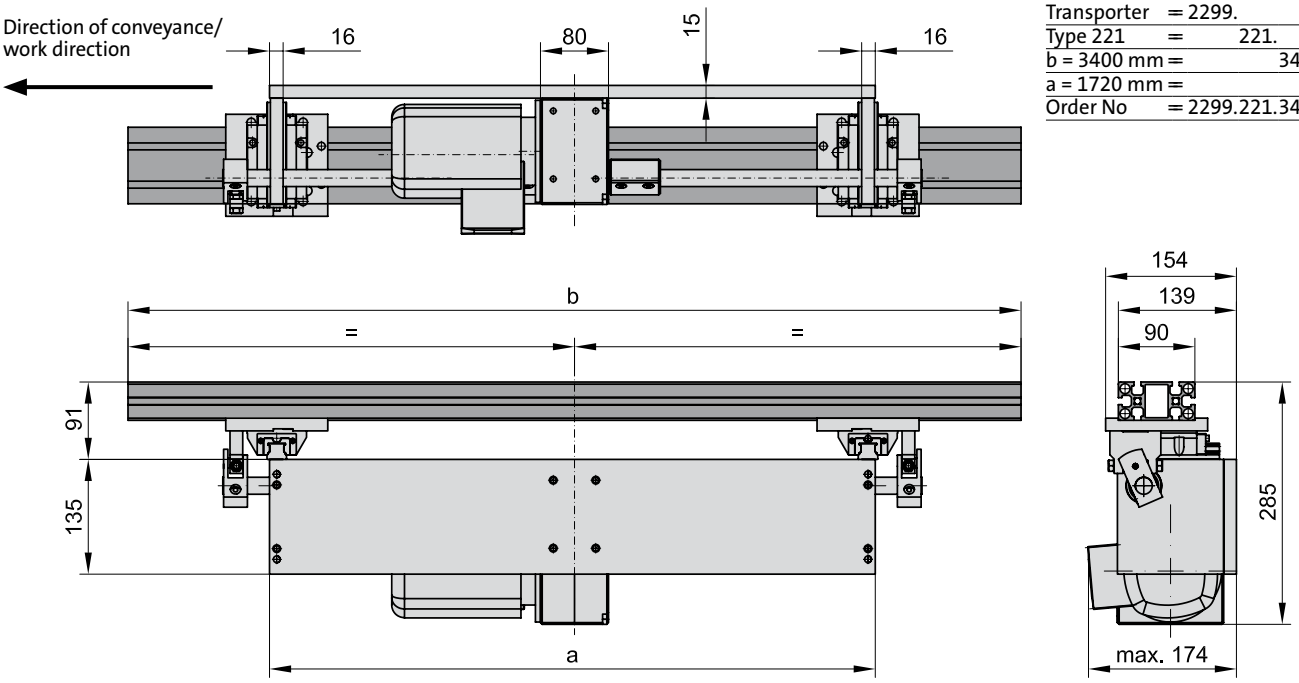

Ordering example:

Transporter	= 2299.
Type 221	= 221.
b = 3400 mm	= 3400.
a = 1720 mm	= 1720
Order No	= 2299.221.3400.1720

2299.221. vertical centre gear position, two slides, with profile and support

b	3100	3200	3300	3400	3500	3600	3700	3800	3900	4000	4100	4200	4300	4400	4500	4600	4700	4800	4900	5000
a																				
1720	●	●	●	●	●	●														
2320							●	●	●	●	●	●	●							
2920														●	●	●	●	●	●	●

2299.222.

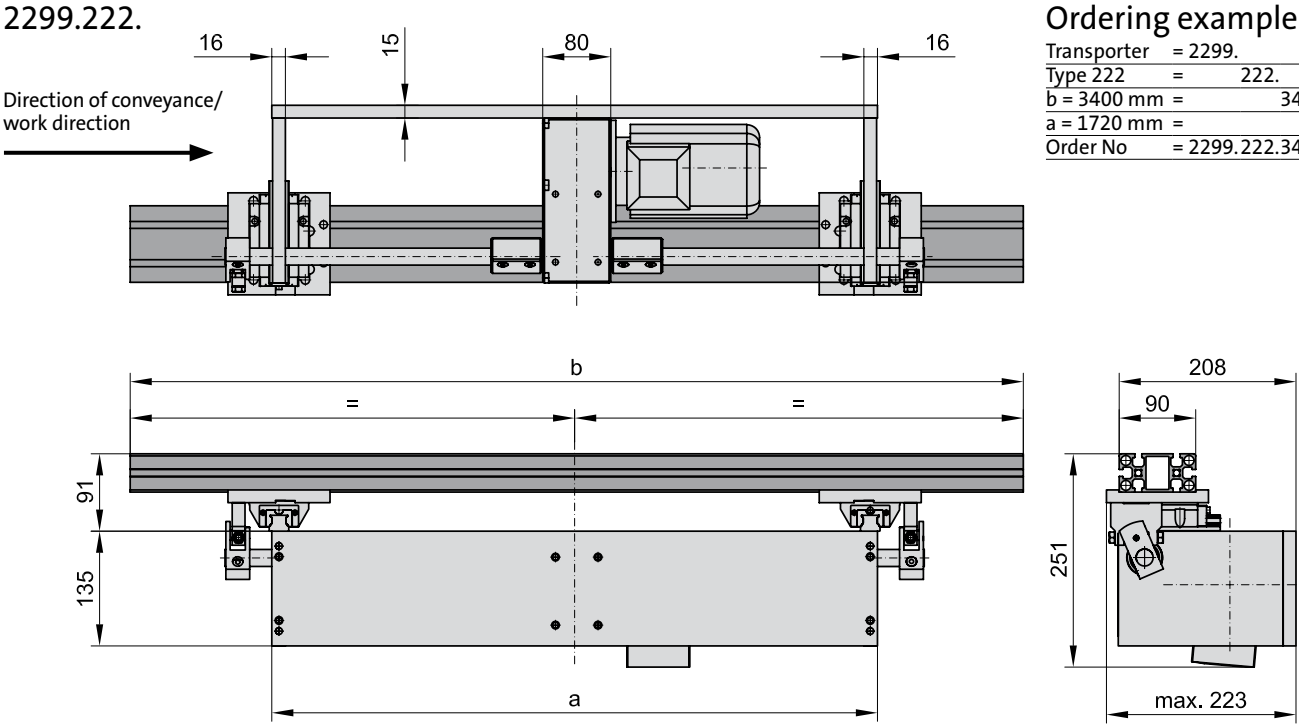

Ordering example:

Transporter	= 2299.
Type 222	= 222.
b = 3400 mm	= 3400.
a = 1720 mm	= 1720
Order No	= 2299.222.3400.1720

2299.222. horizontal centre gear position, two slides, with profile and support

b	3100	3200	3300	3400	3500	3600	3700	3800	3900	4000	4100	4200	4300	4400	4500	4600	4700	4800	4900	5000
a																				
1720	●	●	●	●	●	●														
2320							●	●	●	●	●	●	●							
2920														●	●	●	●	●	●	●

subject to alterations

Electro-mechanical transporters
Fastening element with height adjustment system
Fastening element

2299.510 Fastening element with height adjustment system

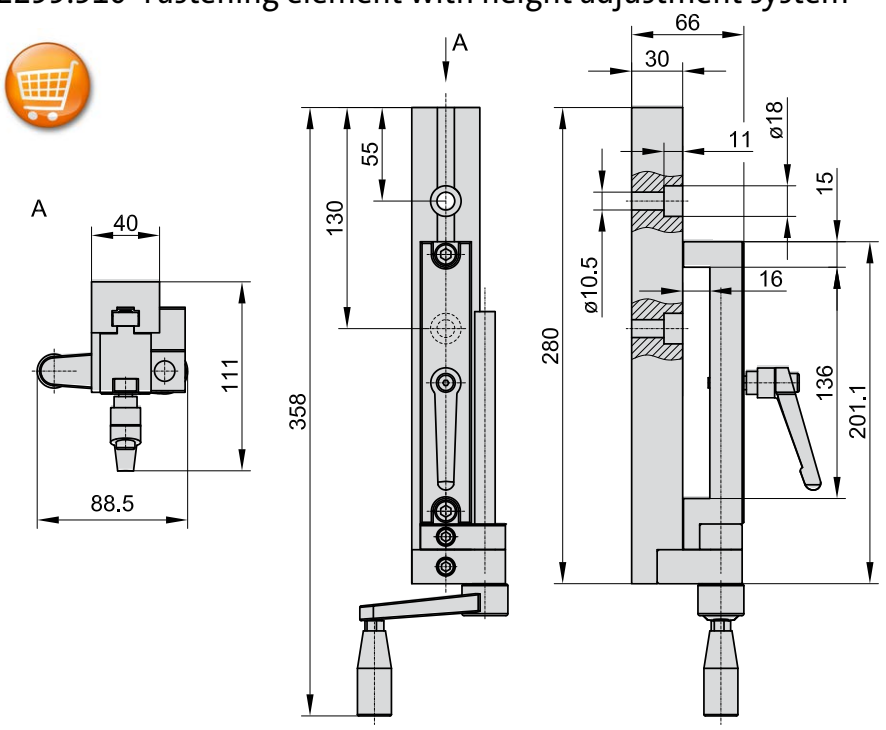



2299.511 Fastening element

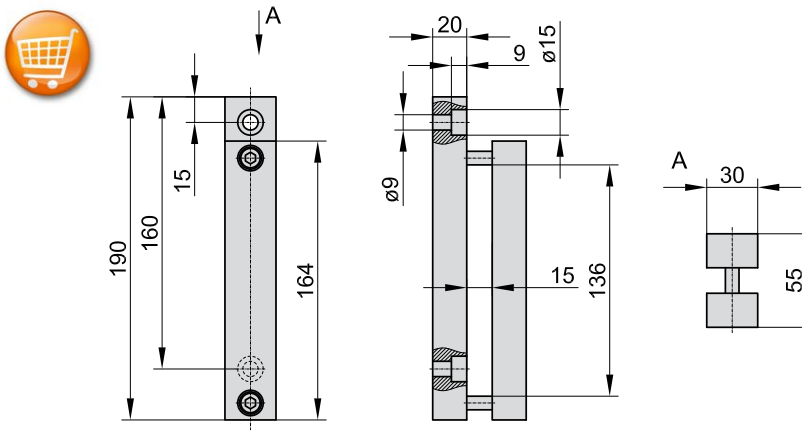

Note:

Fastening of the transporters
2299.011./012./121./122./221./222.
with or without height adjustment system.

2299.510 2x M10
2299.511 2x M8

Fastening screws are not included in scope of delivery.

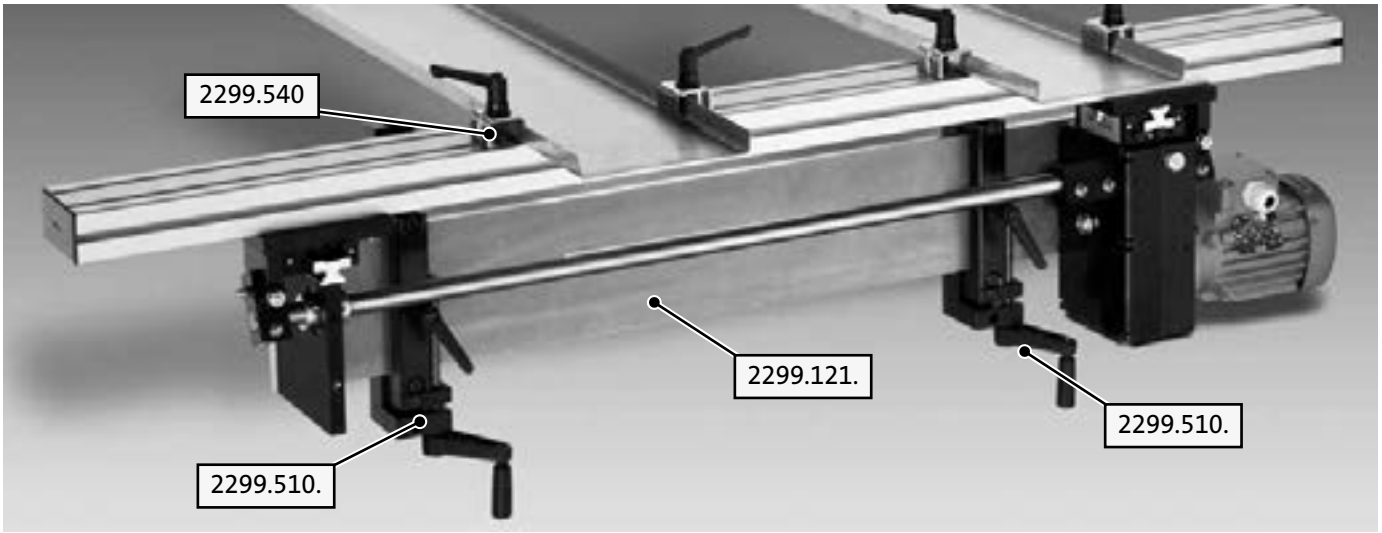

Electro-mechanical transporters
Distance
Quick clamp for guiding system

2299.520 Distance

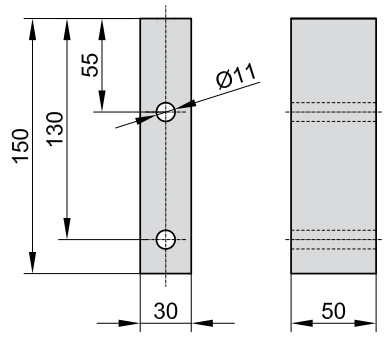

Application example

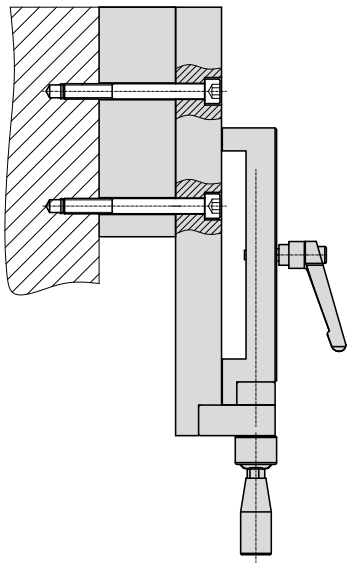

Note:

Distance for fastening element with height adjustment system 2299.510

Fastening screws are not included in scope of delivery.

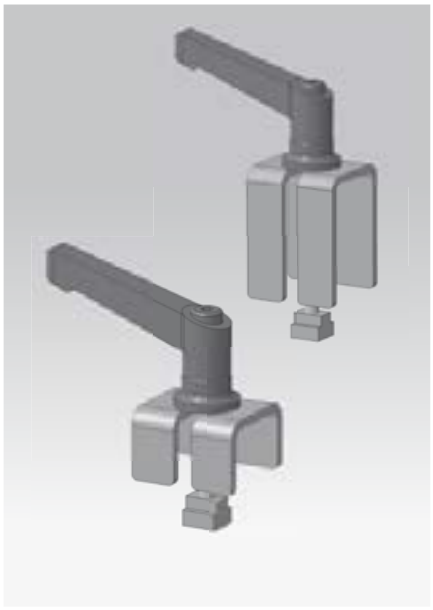

2299.540
Quick clamp for guiding system low version

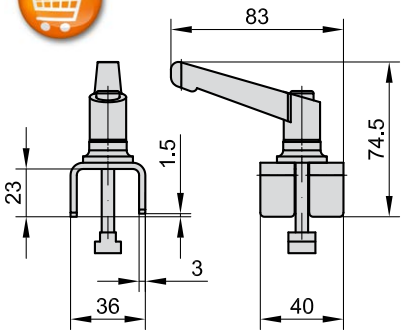

2299.541
Quick clamp for guiding system high version

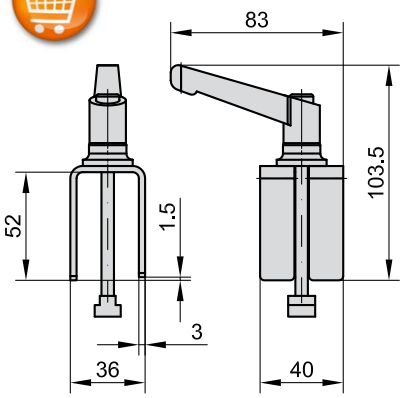



Note:

The guiding system tensioners fit the T-slots of the profile used for the transporters.

Max. side wall height of the guiding system (l_1):

2299.540 = 23 mm
2299.541 = 52 mm

subject to alterations

Electro-mechanical transporters
Angled mounting with adapter plate

2299.530 Angeled mounting

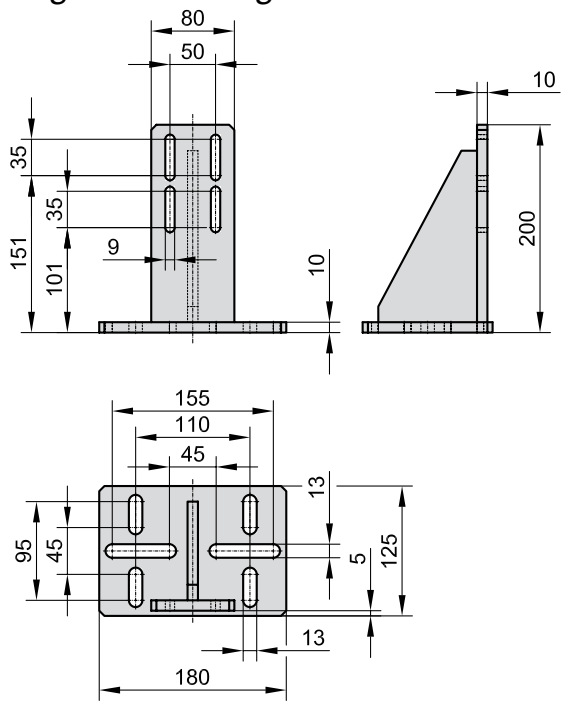

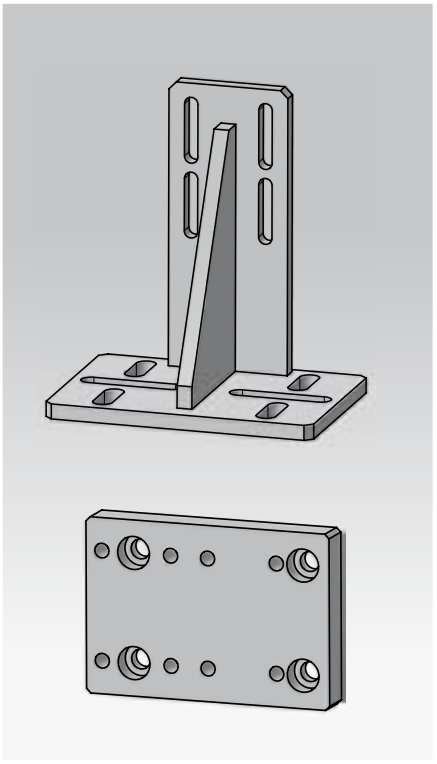

Adapter plate

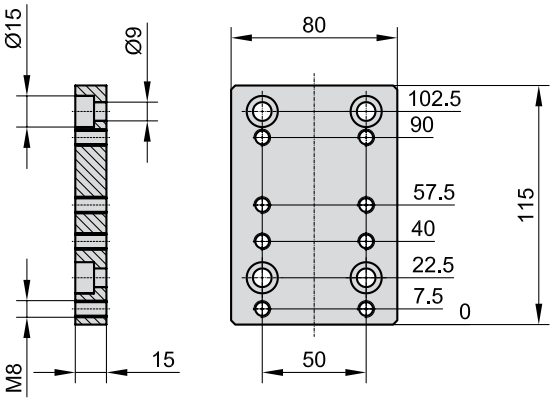

Note:

The angeled mounting and the adapter together allow individual mounting of the transporters 2299.001 and 2299.002.

Fastening screws are not included in scope of delivery.

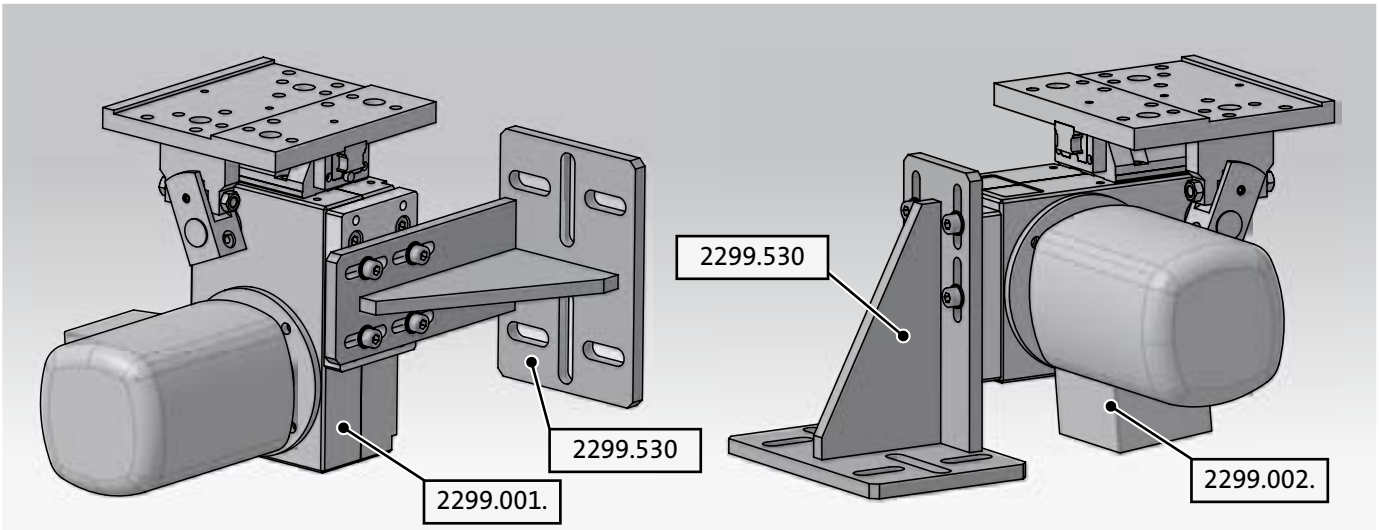

A Die Sets

B Precision Ground Plates and Flat Bars

C Lifting and Clamping Devices

D Guide elements

E Ground Precision Components

F Springs

G Elastomer-Bars, -Sheets, -Sections

H FIBRO Chemical Tooling Aids

J Peripheral Equipment

K Cam Units

Flex cam, cam slide units, roller slide units

L Standard Parts for Mould Making



Cam units



Flex cam

Please request your catalogue

PDF
DOWNLOAD



Standard
Cam slide units

Please request your catalogue

PDF
DOWNLOAD



Roller
Slide units

Please request your catalogue

PDF
DOWNLOAD



Cam slide units KBV1 with Gas spring

Please request your catalogue

PDF
DOWNLOAD



Cam slide units KBV2 with Gas spring

Please request your catalogue



FIBRO Compact Cam (FCC) Tool slides

Please request your catalogue

PDF
DOWNLOAD

A Die Sets

B Precision Ground Plates and Flat Bars

C Lifting and Clamping Devices

D Guide elements

E Ground Precision Components

F Springs

G Elastomer-Bars, -Sheets, -Sections

H FIBRO Chemical Tooling Aids

J Peripheral Equipment

K Cam Units

L Standard Parts for Mould Making



Standard parts for Mould making

FIBRO

Contents

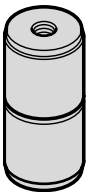

2442.12. L10

Centring unit

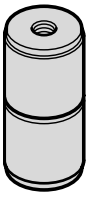

2442.13. L10

Centring unit, flat

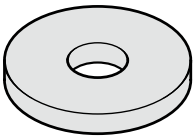

2442.12.3. L11

Adjusting washer

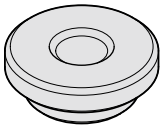

2442.12.4. L11

Retaining washer



3300.10. L12

Ejector rod



3100.04. L13

Centring sleeve

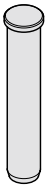

3202.12. L14

Guide pillar



3202.13. L14

Guide pillar

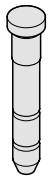

3111.10. L15

Guide pillar

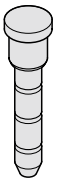

3111.20. L16-19

Guide pillar, shouldered

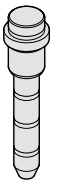

3111.21. L20-23

Locating guide pillar, shouldered

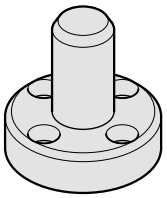

3111.31. L24

Guide pillar with flange



3110.11. L25

Guide pillar (Angle pin)



3100.09. L26

Guide sleeve

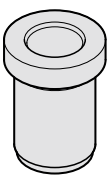

3120.40. L27

Guide bush, headed

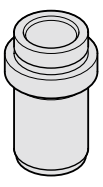

3120.42. L28

Locating guide bush, headed

Contents

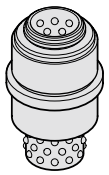

3120.65. L29

Ball bearing guide, complete



2087.72. L30

Guide bush with collar, Bronze with solid lubricant



2087.70. L31

Guide bush with collar, Bronze with solid lubricant



2087.71. L32

Guide bush with collar, Bronze with solid lubricant



2087.73. L33

Guide bush with collar, Bronze with solid lubricant



3120.70. L34-35

Guide bush, Bronze with solid lubricant

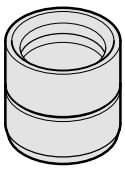

3120.71. L36-37

Guide bush, Bronze

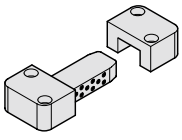

3131.40. L38

Rectangular Guide, Steel with solid lubricant

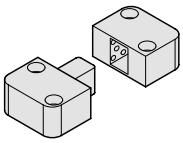

3131.80. L39

Rectangular guide, Steel with Rollers

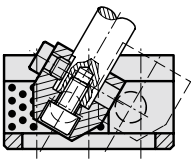

2967.10. L42

Bolt guide

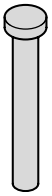

237.1. L44-45

Ejector pin, hardened, DIN ISO 6751

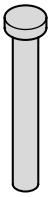

237.8. L46-47

Ejector pin, nitrided, DIN ISO 6751

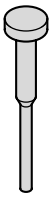

238.1. L48

Ejector pin, hardened, round stepped, DIN ISO 8694

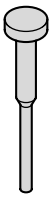

238.8. L49

Ejector pin, nitrided, round stepped, DIN ISO 8694

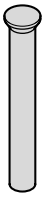

239.1. L50-51

Ejector pin, hardened, similar to DIN 1530 Shape D

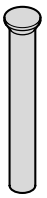

239.8. L52

Ejector pin, nitrided, similar to DIN 1530 Shape D

FIBRO

Contents

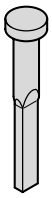

263.1. L54

Flat ejector pin, hardened, similar to DIN ISO 8693

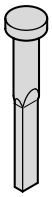

263.8. L55

Flat ejector pin, nitrided, similar to DIN ISO 8693

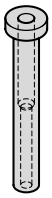

264.1. L56

Ejector sleeve, hardened, DIN ISO 8405

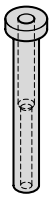

264.8. L57

Ejector sleeve, nitrided, DIN ISO 8405

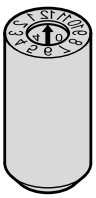

2280.01. L58

Date stamp complete, embossed lettering

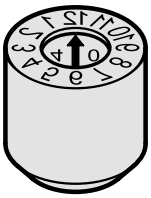

2280.02. L59

Date stamp complete (short version) , embossed lettering

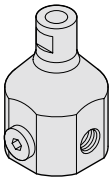

3820.10. L60

Quill holder for core tempering

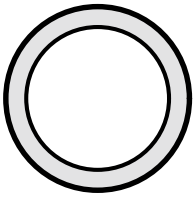

3800.01.01.01. L61

O-ring, Viton

L64-66

Gas spring MOULD LINE - Description

L67-68

Gas spring MOULD LINE - Installation instructions

L70

Gas springs from FIBRO - The Safer Choice

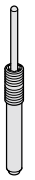

3479.030. L72

Gas spring (spring-loaded plunger) MOULD LINE



3479.032. L73

Gas spring (spring-loaded plunger) MOULD LINE

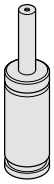

3487.12.00300. L74-75

Gas spring MOULD LINE

3487.12.00500. L76-77

Gas spring MOULD LINE

3487.12.00750. L78-79

Gas spring MOULD LINE

Contents

3487.12.01000. L80-81

Gas spring MOULD LINE



Guide elements for Mould making

Centering unit
Centring unit, flat



Mounting example

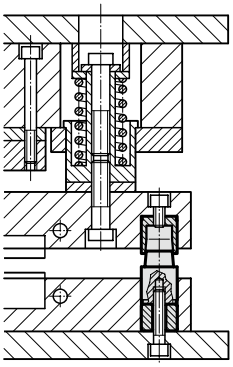

2442.12.

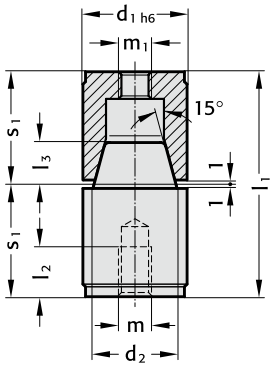

Description:

Conical centring units are used to increase repeat accuracy in mould, die and machine-making.

2442.12. Centering unit

Order No	d_1	d_2	l_1	l_2	l_3	m	s_1
2442.12.012.034	12	8	34	6	4	M4	17
2442.12.014.034	14	10	34	7.5	6	M5	17
2442.12.016.034	16	10	34	7.5	6	M5	17
2442.12.020.054	20	15	54	12	9	M8	27
2442.12.025.054	25	20	54	12	10	M8	27
2442.12.026.054	26	20	54	12	10	M8	27
2442.12.030.072	30	25	72	15	14	M10	36
2442.12.032.072	32	25	72	15	14	M10	36
2442.12.042.092	42	35	92	15	18	M10	46





2442.13.

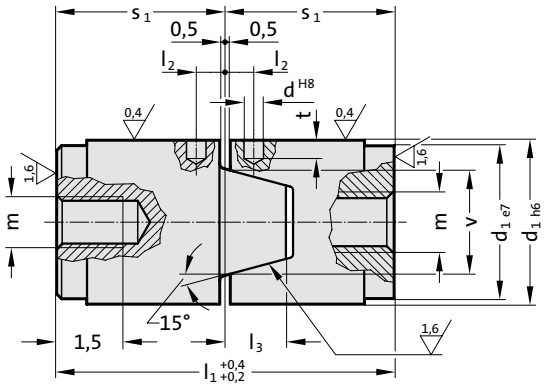

2442.13. Centring unit, flat

Order No	d_1	d	l_1	l_2	l_3	v	s_1	t	m
2442.13.030.072	30	4	72	5	10	18	36	5	M10
2442.13.042.092	42	5	92	6	14	23	46	7	M10
2442.13.054.112	54	6	112	8	17	30	56	8	M12
2442.13.080.152	80	8	152	8	27	42	76	11	M16



Adjusting washer
Retaining washer

2442.12.3.

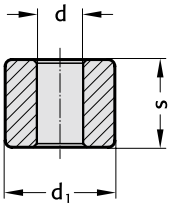



2442.12.3. Adjusting washer

Order No	d_1	d	s	Order No	d_1	d	s	Order No	d_1	d	s
2442.12.3.012.010	12	4.5	10	2442.12.3.020.020	20	8.5	20	2442.12.3.026.030	26	8.5	30
2442.12.3.014.005	14	5.5	5	2442.12.3.020.030	20	8.5	30	2442.12.3.030.010	30	12.5	10
2442.12.3.014.010	14	5.5	10	2442.12.3.020.040	20	8.5	40	2442.12.3.030.020	30	12.5	20
2442.12.3.014.014	14	5.5	14	2442.12.3.025.009	25	10.5	9	2442.12.3.030.030	30	12.5	30
2442.12.3.014.019	14	5.5	19	2442.12.3.025.010	25	10.5	10	2442.12.3.030.040	30	12.5	40
2442.12.3.016.005	16	6.5	5	2442.12.3.025.015	25	10.5	15	2442.12.3.030.050	30	12.5	50
2442.12.3.016.010	16	6.5	10	2442.12.3.025.020	25	10.5	20	2442.12.3.032.010	32	12.5	10
2442.12.3.016.015	16	6.5	15	2442.12.3.025.025	25	10.5	25	2442.12.3.032.020	32	12.5	20
2442.12.3.016.019	16	6.5	19	2442.12.3.025.035	25	10.5	35	2442.12.3.032.030	32	12.5	30
2442.12.3.016.020	16	6.5	20	2442.12.3.025.045	25	10.5	45	2442.12.3.032.040	32	12.5	40
2442.12.3.016.025	16	6.5	25	2442.12.3.025.055	25	10.5	55	2442.12.3.032.050	32	12.5	50
2442.12.3.020.009	20	8.5	9	2442.12.3.026.009	26	8.5	9	2442.12.3.042.010	42	10.5	10
2442.12.3.020.010	20	8.5	10	2442.12.3.026.010	26	8.5	10	2442.12.3.042.020	42	10.5	20
2442.12.3.020.015	20	8.5	15	2442.12.3.026.020	26	8.5	20	2442.12.3.042.030	42	10.5	30

2442.12.4.

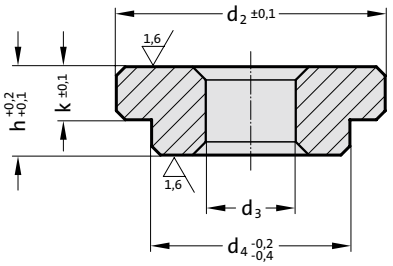



2442.12.4. Retaining washer

Order No	d_4	d_3	d_2	h	k
2442.12.4.014	14	5.5	16	5	3.2
2442.12.4.020	20	8.5	25.5	9	6.3
2442.12.4.026	26	8.5	31.5	9	6.3
2442.12.4.030	30	11	35.5	10	6.3
2442.12.4.042	42	11	47.5	10	6.3

Ejector rod



3300.10.

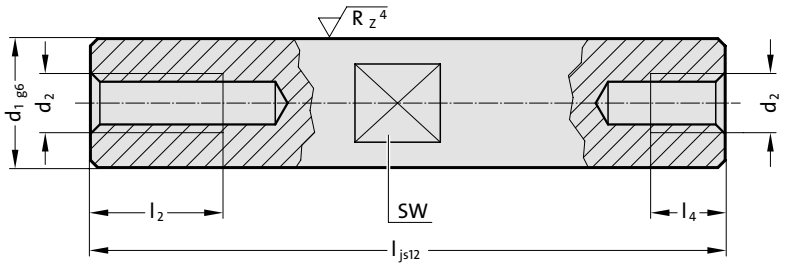

3300.10. Ejector rod

d_1	10	14	18	20	24	30
d_2	M6	M8	M10	M12	M12	M16
l_2	16	16	20	25	25	30
l_4	9	11	12	14	14	16
AF*	9	12	14	16	19	24
l						
60	●	●				
70	●	●				
80	●	●				
100	●	●	●	●		
120	●	●	●	●	●	
140	●	●	●	●	●	
160		●	●	●	●	
180		●	●	●	●	●
200			●	●	●	
220			●	●		●
240			●	●	●	
260						●
300						●

*SW = Width across flats

Ordering Code (example):

Ejector rod		=3300.10.	
Guide diameter d_1	20 mm	=	020.
Length l	100 mm	=	100
Order No		=3300.10.020.100	

subject to alterations

Centring sleeve

3100.04.

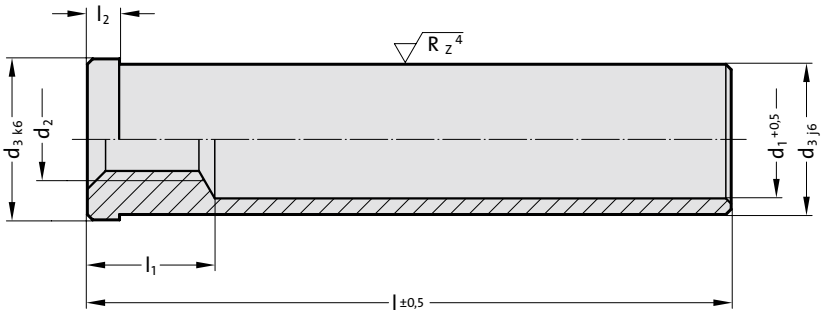



3100.04. Centring sleeve

d_3	14	20	26	30	42	54
d_2	M6	M8	M10	M12	M16	M20
d_1	11	16	21	25	33	43
l_1	8	13	13	13	13	13
l_2	2	2	2.5	2.5	4.5	4.5
l						
20	●					
30	●	●	●			
40	●	●	●	●	●	
50	●					
60	●	●	●	●	●	●
70	●					
80	●	●	●	●	●	●
100	●	●	●	●	●	
120		●	●	●	●	●
140		●	●	●	●	
160		●	●	●	●	●
180			●	●	●	
200				●	●	●
220					●	
240				●		●
260					●	
280						●
300					●	

Ordering Code (example):

Centring sleeve		=3100.04.
Guide diameter d_3	30 mm=	030.
Length l	40 mm=	040
Order No		=3100.04.030.040

Guide pillar



3202.12.

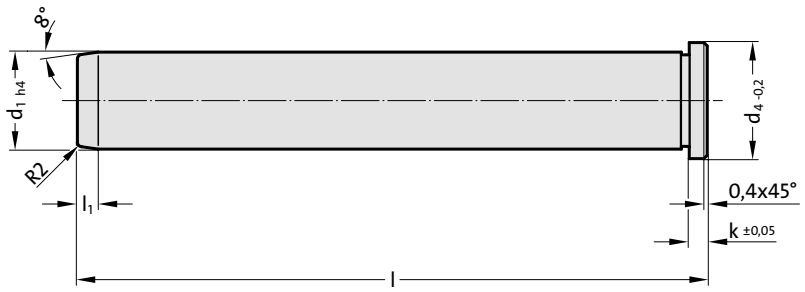

3202.12. Guide pillar

Order No	d_1	l	d_4	k	l_1
3202.12.012.080	12	80	16	4	4
3202.12.012.100	12	100	16	4	4
3202.12.012.120	12	120	16	4	4
3202.12.018.120	18	120	22	6	7
3202.12.018.140	18	140	22	6	7
3202.12.018.160	18	160	22	6	7
3202.12.030.160	30	160	36	6	7
3202.12.030.200	30	200	36	6	7
3202.12.030.240	30	240	36	6	7



3202.13.



3202.13. Guide pillar

Order No	d_1	l	l_1
3202.13.012.100	12	100	3
3202.13.012.125	12	125	3
3202.13.018.125	18	125	6
3202.13.018.160	18	160	6
3202.13.030.160	30	160	6
3202.13.030.240	30	240	6

Guide pillar

3111.10.

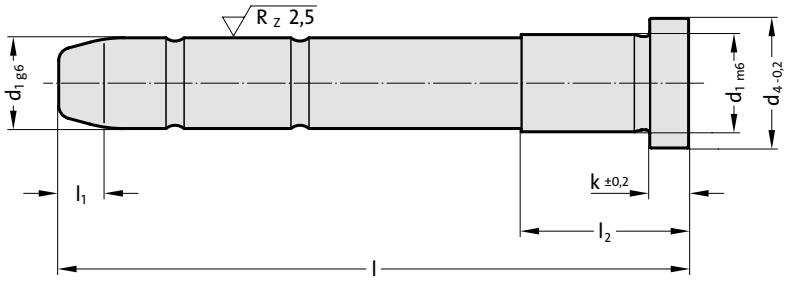



3111.10. Guide pillar

d_1	10	12	14	16	18	20	22	24	30	32	40	50	60
d_4	12	16	18	20	22	24	26	28	36	36	48	58	68
k	3	6	8	8	8	8	15	15	15	15	15	15	20
l_1	4	7	7	7	7	7	7	7	7	7	10	10	12
l	l_2												
40	17												
60	17	17	17	22									
80	22	22	22	27	27	27							
100	27	27	27	27	27	27	36	36					
120		36	36	36	36	36	46	46					
140			46	46	46	46	46	46					
160			46	46	46	46	56	56	56	56			
180					56	56	56	56					
200					56	56	76	76	56	56	56	56	
220							76	76					
240									76	76	76	76	76
300											96	96	96
360													116

Ordering Code (example):

Guide pillar		=	3111.10.
Guide diameter d_1	22 mm	=	022.
Length l	100 mm	=	100
Order No		=	3111.10.022.100

Guide pillar, shouldered



3111.20.

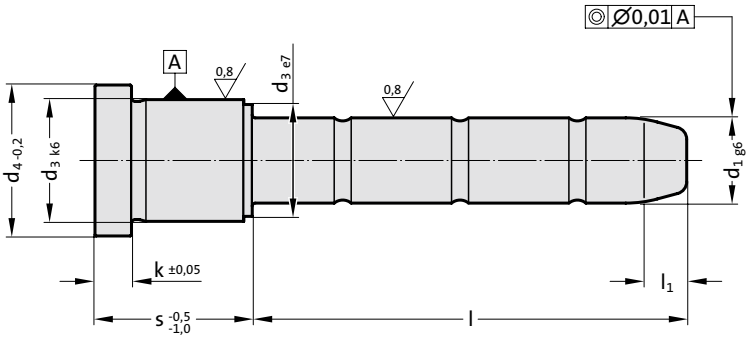

3111.20. Guide pillar, shouldered

d_1	9	9	9	9	9	9	10	10	10	10	10	10	14	14	14	14	14	14	14	14	15	15	15	15	15	15	15	15
s	12	17	22	27	36	46	12	17	22	27	36	46	22	27	36	46	56	66	76	86	22	27	36	46	56	66	76	86
d_3	14	14	14	14	14	14	14	14	14	14	14	14	20	20	20	20	20	20	20	20	20	20	20	20	20	20	20	20
d_4	16	16	16	16	16	16	16	16	16	16	16	16	25	25	25	25	25	25	25	25	25	25	25	25	25	25	25	25
l_1	4	4	4	4	4	4	4	4	4	4	4	4	7	7	7	7	7	7	7	7	7	7	7	7	7	7	7	7
k	3	3	3	3	3	3	3	3	3	3	3	3	6	6	6	6	6	6	6	6	6	6	6	6	6	6	6	6
l																												
20		●						●					●	●	●	●	●				●	●	●	●	●			
25			●	●	●				●	●	●																	
30		●		●		●		●		●		●																
35		●	●	●	●			●	●	●	●		●	●	●	●	●				●	●	●	●	●			
40													●	●	●						●	●	●					
45	●			●	●	●	●			●	●	●	●	●	●	●					●	●	●	●				
50				●						●			●								●							
55			●			●			●			●	●	●	●		●	●	●	●	●	●	●		●	●	●	●
65													●	●	●	●		●			●	●	●	●		●		
70													●								●							
75						●						●			●		●						●		●			
85														●		●						●		●				
90													●								●							
95															●		●	●	●	●			●		●	●	●	●
105														●		●						●		●				
110													●								●							

Ordering Code (example):

Guide pillar, shouldered		=3111.20.
Guide diameter d_1	24 mm=	024.
Einbaulaenge s	27 mm=	027.
Guide length l	25 mm=	025
Order No		=3111.20.024.027.025

subject to alterations

Guide pillar, shouldered

3111.20.

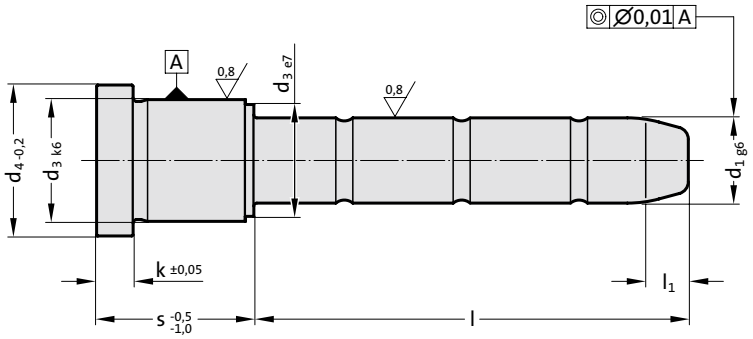



3111.20. Guide pillar, shouldered

d_1	18	18	18	18	18	18	18	18	18	18	20	20	20	20	20	20	20	20	20	20	22	22	22	22	22	22	22	22	22	22
s	22	27	36	46	56	66	76	86	96	116	22	27	36	46	56	66	76	86	96	116	27	36	46	56	66	76	86	96	116	136
d_3	26	26	26	26	26	26	26	26	26	26	26	26	26	26	26	26	26	26	26	26	30	30	30	30	30	30	30	30	30	30
d_4	31	31	31	31	31	31	31	31	31	31	31	31	31	31	31	31	31	31	31	31	35	35	35	35	35	35	35	35	35	35
l_1	7	7	7	7	7	7	7	7	7	7	7	7	7	7	7	7	7	7	7	7	7	7	7	7	7	7	7	7	7	7
k	6	6	6	6	6	6	6	6	6	6	6	6	6	6	6	6	6	6	6	6	6	6	6	6	6	6	6	6	6	6
l																														
20	●	●	●	●	●						●	●	●	●	●															
25																					●	●	●	●		●				
35	●	●	●		●						●	●	●		●															
40	●	●	●								●	●	●																	
45	●	●	●	●							●	●	●	●							●	●	●	●		●				
50	●	●	●								●	●	●								●	●	●							
55	●	●	●		●	●	●	●	●		●	●	●		●	●	●	●	●			●		●	●	●	●	●		
60	●	●	●								●	●	●								●	●	●							
65	●	●	●	●							●	●	●	●							●		●							
70	●	●	●								●	●	●								●	●	●							
75			●		●	●	●	●					●		●	●	●	●				●		●	●	●	●	●	●	
80	●	●	●								●	●	●								●	●	●							
85	●	●		●							●	●		●							●		●							
95			●		●	●	●	●	●				●		●	●	●	●	●			●		●	●	●	●	●		
105		●		●								●		●							●		●							
115	●		●							●	●		●							●		●		●		●			●	
125		●										●									●		●							
135			●	●									●	●								●								●
155																													●	
165				●										●							●	●	●	●						

Ordering Code (example):

Guide pillar, shouldered		=3111.20.
Guide diameter d_1	24 mm=	024.
Einbaulaenge s	27 mm=	027.
Guide length l	25 mm=	025
Order No		=3111.20.024.027.025

Guide pillar, shouldered



3111.20.

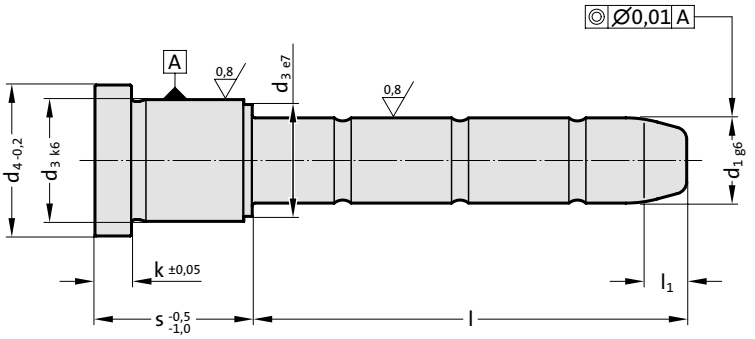

3111.20. Guide pillar, shouldered

d_1	24	24	24	24	24	24	24	24	24	24	30	30	30	30	30	30	30	30	30	30	30	30	32	32	32	32	32	32	32	32	32	32	32	32
s	27	36	46	56	66	76	86	96	116	136	27	36	46	56	66	76	86	96	116	136	156	196	27	36	46	56	66	76	86	96	116	136	156	196
d_3	30	30	30	30	30	30	30	30	30	30	42	42	42	42	42	42	42	42	42	42	42	42	42	42	42	42	42	42	42	42	42	42	42	42
d_4	35	35	35	35	35	35	35	35	35	35	47	47	47	47	47	47	47	47	47	47	47	47	47	47	47	47	47	47	47	47	47	47	47	47
l_1	7	7	7	7	7	7	7	7	7	7	7	7	7	7	7	7	7	7	7	7	7	7	7	7	7	7	7	7	7	7	7	7	7	7
k	6	6	6	6	6	6	6	6	6	6	6	6	6	6	6	6	6	6	6	6	6	6	6	6	6	6	6	6	6	6	6	6	6	6
l																																		
25	●	●	●	●		●																												
45	●	●	●	●		●					●		●										●		●									
50	●	●	●																															
55		●		●	●	●	●	●				●		●	●	●	●	●						●		●	●	●	●	●				
60	●	●	●																															
65	●		●								●		●										●		●									
70	●	●	●																															
75		●		●	●	●	●	●	●			●		●	●	●	●	●	●					●		●	●	●	●	●	●			
80	●	●	●																															
85	●		●										●												●									
95		●		●	●	●	●	●				●		●	●	●	●	●		●				●		●	●	●	●	●		●		
105	●		●								●		●										●		●									
115		●		●		●			●			●		●	●	●	●	●	●	●	●			●		●	●	●	●	●	●	●	●	
125	●		●										●												●									
135		●								●				●	●												●	●							
155									●			●				●	●	●	●	●	●	●		●				●	●	●	●	●	●	●	
165	●	●	●	●							●		●										●		●									
175														●	●												●	●							
195																						●												●

Ordering Code (example):

Guide pillar, shouldered		=3111.20.
Guide diameter d_1	24 mm=	024.
Einbaulaenge s	27 mm=	027.
Guide length l	25 mm=	025
Order No		=3111.20.024.027.025

subject to alterations

Guide pillar, shouldered

3111.20.

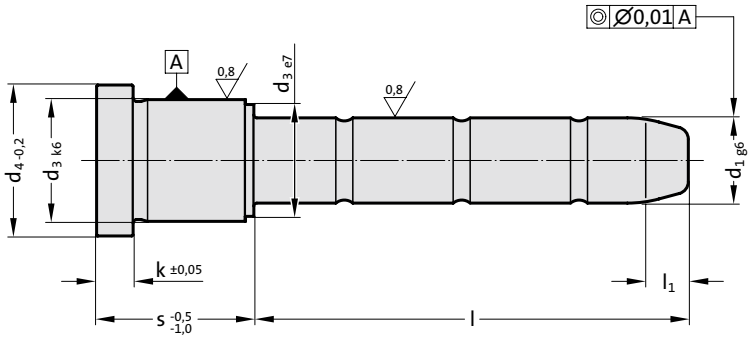



3111.20. Guide pillar, shouldered

d_1	40	40	40	40	40	40	40	40	40	42	42	42	42	42	42	42	42	42	50	50	50	50	50	60	60	60	60	60	60
s	56	66	76	86	96	116	136	156	196	56	66	76	86	96	116	136	156	196	96	116	136	156	196	96	116	136	156	196	246
d_3	54	54	54	54	54	54	54	54	54	54	54	54	54	54	54	54	54	54	66	66	66	66	66	80	80	80	80	80	80
d_4	60	60	60	60	60	60	60	60	60	60	60	60	60	60	60	60	60	60	72	72	72	72	72	86	86	86	86	86	86
l_1	7	7	7	7	7	7	7	7	7	7	7	7	7	7	7	7	7	7	10	10	10	10	10	10	10	10	10	10	10
k	10	10	10	10	10	10	10	10	10	10	10	10	10	10	10	10	10	10	10	10	10	10	10	20	20	20	20	20	20
l																													
75	●	●	●	●	●					●	●	●	●	●															
95						●	●								●	●													
115	●		●		●			●		●		●		●			●		●					●					
135		●		●		●	●				●		●		●	●				●	●	●			●	●			
155	●				●			●	●	●				●			●	●	●	●	●	●		●	●	●	●		
175			●									●											●					●	
195	●					●			●	●					●			●	●	●	●	●	●	●	●	●	●	●	●
215							●	●								●	●												
235									●									●					●				●	●	●
275																													●
315																													●

Ordering Code (example):

Guide pillar, shouldered		=3111.20.
Guide diameter d_1	24 mm=	024.
Einbaulaenge s	27 mm=	027.
Guide length l	25 mm=	025
Order No		=3111.20.024.027.025

Locating guide pillar, shouldered



3111.21.

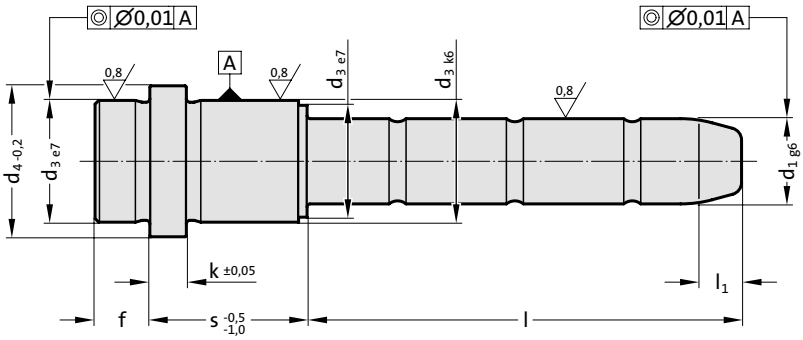

3111.21. Locating guide pillar, shouldered

d_1	9	9	9	9	9	9	9	10	10	10	10	10	10	10	14	14	14	14	14	14	14	14	14	14	14
s	12	17	22	27	36	46	56	12	17	22	27	36	46	56	17	22	27	36	46	56	66	76	86	96	116
d_3	14	14	14	14	14	14	14	14	14	14	14	14	14	14	20	20	20	20	20	20	20	20	20	20	20
d_4	16	16	16	16	16	16	16	16	16	16	16	16	16	16	25	25	25	25	25	25	25	25	25	25	25
l_1	7	7	7	7	7	7	7	7	7	7	7	7	7	7	7	7	7	7	7	7	7	7	7	7	7
k	3	3	3	3	3	3	3	3	3	3	3	3	3	3	6	6	6	6	6	6	6	6	6	6	6
f	3	3	3	3	3	3	3	3	3	3	3	3	3	3	9	9	9	9	9	9	9	9	9	9	9
l																									
20		●		●					●		●														
25	●	●	●	●	●			●	●	●	●	●													
30		●		●		●			●		●		●			●	●								
35		●	●		●	●	●		●	●		●	●	●	●			●	●	●					
45	●			●	●	●		●			●	●	●				●		●						
50		●		●					●		●					●									
55		●	●						●	●					●			●		●	●	●	●	●	
60							●							●											
65	●				●			●				●					●		●		●				
70		●		●		●			●		●		●			●									
75		●	●						●	●					●			●		●					●
85					●							●					●		●						
90				●							●					●									
95			●							●					●			●		●	●	●	●	●	
105																	●		●						
110																●									
125																●	●	●	●		●				
135																				●					
145																	●		●						
150																●									
155																		●							
165																	●								

Ordering Code (example):

Locating guide pillar, shouldered		=	3111.21.
Guide diameter d_1	22 mm	=	022.
Mounting length s	17	=	017.
Guide length l	35	=	035
Order No		=	3111.21.022.017.035

subject to alterations

Locating guide pillar, shouldered

3111.21.

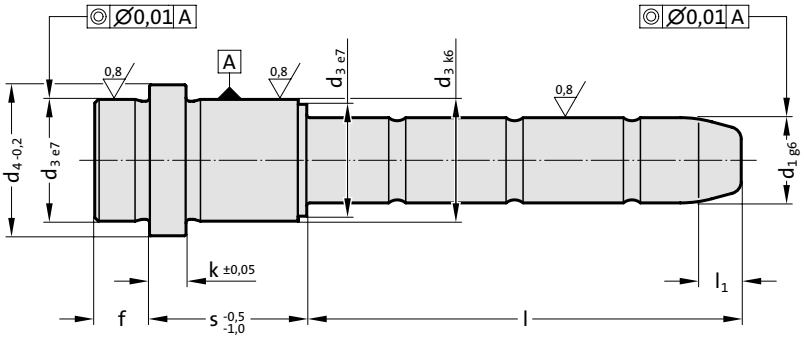



3111.21. Locating guide pillar, shouldered

d_1	15	15	15	15	15	15	15	15	15	15	15	18	18	18	18	18	18	18	18	18	18	18	18	20	20	20	20	20	20	20	20	20	20	20	20
s	17	22	27	36	46	56	66	76	86	96	116	17	22	27	36	46	56	66	76	86	96	116	136	17	22	27	36	46	56	66	76	86	96	116	136
d_3	20	20	20	20	20	20	20	20	20	20	20	26	26	26	26	26	26	26	26	26	26	26	26	26	26	26	26	26	26	26	26	26	26	26	26
d_4	25	25	25	25	25	25	25	25	25	25	25	31	31	31	31	31	31	31	31	31	31	31	31	31	31	31	31	31	31	31	31	31	31	31	31
l_1	7	7	7	7	7	7	7	7	7	7	7	7	7	7	7	7	7	7	7	7	7	7	7	7	7	7	7	7	7	7	7	7	7	7	7
k	6	6	6	6	6	6	6	6	6	6	6	6	6	6	6	6	6	6	6	6	6	6	6	6	6	6	6	6	6	6	6	6	6	6	6
f	9	9	9	9	9	9	9	9	9	9	9	9	9	9	9	9	9	9	9	9	9	9	9	9	9	9	9	9	9	9	9	9	9	9	9
l																																			
30		●	●																																
35	●			●	●	●						●	●	●	●	●	●	●						●	●	●	●	●	●	●					
45			●		●								●	●		●									●	●		●							
50		●																																	
55	●			●		●	●	●	●	●		●			●		●	●	●	●	●			●			●		●	●	●	●	●		
65			●		●		●						●	●		●									●	●		●							
70		●																																	
75	●			●		●					●	●			●		●	●	●	●		●		●			●		●	●	●	●		●	
85			●		●								●	●		●									●	●		●							
90		●																																	
95	●			●		●	●	●	●	●					●		●	●	●	●	●					●		●	●	●	●	●			
105			●		●									●		●										●		●							
110		●																																	
115													●		●							●			●		●							●	
120												●												●											
125		●	●	●	●		●							●						●						●						●			
135						●									●	●			●				●			●	●			●					●
145			●		●													●												●					
150		●																																	
155				●													●												●						
165			●											●	●	●										●	●	●							
225														●	●											●	●								
245														●		●										●		●							
255															●												●								

Ordering Code (example):

Locating guide pillar, shouldered		=	3111.21.
Guide diameter d_1	22 mm	=	022.
Mounting length s	17	=	017.
Guide length l	35	=	035
Order No		=	3111.21.022.017.035

Locating guide pillar, shouldered



3111.21.

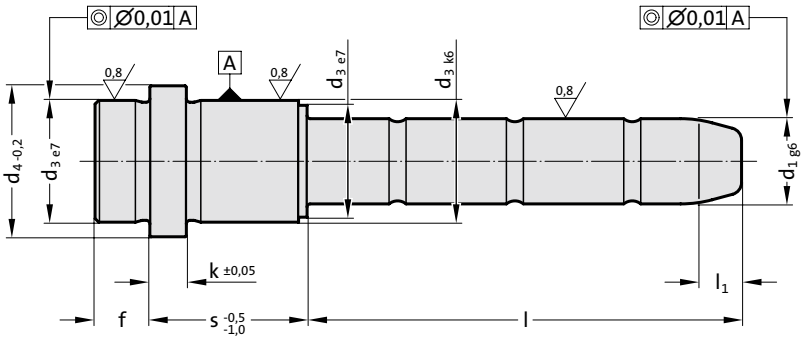

3111.21. Locating guide pillar, shouldered

d_1	22	22	22	22	22	22	22	22	22	22	22	22	22	24	24	24	24	24	24	24	24	24	24	24	24	30	30	30	30	30	30	30	30	30	30	30
s	17	22	27	36	46	56	66	76	86	96	116	136	156	17	22	27	36	46	56	66	76	86	96	116	136	156	27	36	46	56	66	76	86	96	116	136	156	196
d_3	30	30	30	30	30	30	30	30	30	30	30	30	30	30	30	30	30	30	30	30	30	30	30	30	30	30	42	42	42	42	42	42	42	42	42	42	42	42
d_4	35	35	35	35	35	35	35	35	35	35	35	35	35	35	35	35	35	35	35	35	35	35	35	35	35	35	47	47	47	47	47	47	47	47	47	47	47	47
l_1	7	7	7	7	7	7	7	7	7	7	7	7	7	7	7	7	7	7	7	7	7	7	7	7	7	7	7	7	7	7	7	7	7	7	7	7	7	7
k	6	6	6	6	6	6	6	6	6	6	6	6	6	6	6	6	6	6	6	6	6	6	6	6	6	6	6	6	6	6	6	6	6	6	6	6	6	6
f	9	9	9	9	9	9	9	9	9	9	9	9	9	9	9	9	9	9	9	9	9	9	9	9	9	9	9	9	9	9	9	9	9	9	9	9	9	9
l																																						
35	●	●	●	●	●	●	●							●	●	●	●	●	●	●																		
45			●		●											●		●									●		●									
55	●	●		●		●	●	●	●	●				●	●		●		●	●	●	●	●					●		●	●	●	●	●			
65			●		●											●		●									●		●								
75	●	●		●		●	●	●	●	●	●			●	●		●		●	●	●	●	●	●				●		●	●	●	●	●	●		
85			●		●											●		●											●								
95				●		●	●	●	●	●		●					●		●	●	●	●	●		●			●		●	●	●	●	●		●		
105		●	●		●										●	●		●									●		●								
115				●		●		●			●						●		●		●			●					●		●	●	●	●	●	●	●	
125			●		●					●						●		●					●						●								
130		●													●																						
135				●					●			●					●					●			●					●	●						
145								●													●																
155							●				●		●							●				●		●		●				●	●	●	●	●	●	●
165			●	●	●	●										●	●	●	●								●		●								
175																														●	●							
185																											●										
195																																						●
205			●	●	●	●										●	●	●	●														●				
225																																●	●					
245			●	●												●	●										●	●	●	●	●						
285			●	●												●	●										●	●	●								
295																														●	●							

Ordering Code (example):

Locating guide pillar, shouldered		=	3111.21.
Guide diameter d_1	22 mm	=	022.
Mounting length s	17	=	017.
Guide length l	35	=	035
Order No		=	3111.21.022.017.035

subject to alterations

Locating guide pillar, shouldered

3111.21.

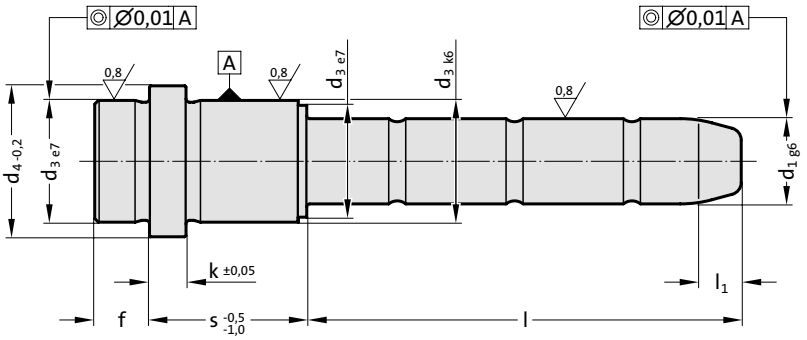



3111.21. Locating guide pillar, shouldered

d_1	32	32	32	32	32	32	32	32	32	32	32	32	40	40	40	40	40	40	40	40	40	40	40	42	42	42	42	42	42	42	42	42	42	42
s	27	36	46	56	66	76	86	96	116	136	156	196	46	56	66	76	86	96	116	136	156	196	246	46	56	66	76	86	96	116	136	156	196	246
d_3	42	42	42	42	42	42	42	42	42	42	42	42	54	54	54	54	54	54	54	54	54	54	54	54	54	54	54	54	54	54	54	54	54	54
d_4	47	47	47	47	47	47	47	47	47	47	47	47	60	60	60	60	60	60	60	60	60	60	60	60	60	60	60	60	60	60	60	60	60	60
l_1	7	7	7	7	7	7	7	7	7	7	7	7	7	7	7	7	7	7	7	7	7	7	7	7	7	7	7	7	7	7	7	7	7	7
k	6	6	6	6	6	6	6	6	6	6	6	6	10	10	10	10	10	10	10	10	10	10	10	10	10	10	10	10	10	10	10	10	10	10
f	9	9	9	9	9	9	9	9	9	9	9	9	12	12	12	12	12	12	12	12	12	12	12	12	12	12	12	12	12	12	12	12	12	12
l																																		
45	●		●																															
55		●		●	●	●	●	●																										
65	●		●																															
75		●		●	●	●	●	●	●					●	●	●	●	●								●	●	●	●	●					
85			●																															
95		●		●	●	●	●	●		●			●						●	●				●						●	●			
105	●		●																															
115		●		●	●	●	●	●	●	●	●			●		●		●			●				●		●		●			●		
125			●																															
135				●	●										●		●		●	●						●		●		●	●			
155		●				●	●	●	●	●	●	●		●				●			●	●			●				●			●	●	
165	●		●										●										●	●										●
175				●	●											●										●								
185	●																																	
195											●		●					●				●			●					●			●	
205								●																										
215																			●	●									●	●				
225						●	●																											
235																						●										●		
245	●	●	●	●	●																		●											●
285	●	●	●																															
295				●	●																													

Ordering Code (example):

Locating guide pillar, shouldered		=	3111.21.
Guide diameter d_1	22 mm	=	022.
Mounting length s	17	=	017.
Guide length l	35	=	035
Order No		=	3111.21.022.017.035

FIBRO

Guide pillar with flange



3111.31.

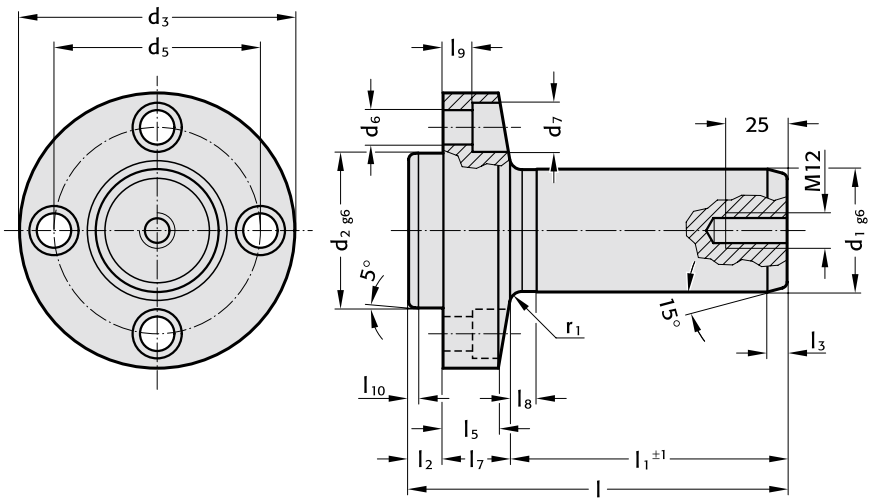

Material:

Steel, case hardened
Surface hardness: 62 + 2 HRC
Penetration depth: 1,2 mm

Execution:

ground

Note:

Fit for receiving bore: H7
Screws not included.

Fixing:

Use socket cap screws DIN EN ISO 4762
M 8 x 20
M 10 x 25
M 12 x 30
M 14 x 35
M 16 x 40.

3111.31. Guide pillar with flange

d_1	32	40	50	63	80
d_2	40	50	63	80	100
d_3	76	92	112	138	170
d_5	55	68	84	105	130
d_6	9	11	14	16	18
d_7	15	18	20	24	26
r_1	4	4	5	6	8
l_2	11	13	14	16	20
l_3	6	6	8	8	10
l_5	15.1	18.4	22.5	27.4	32.1
l_7	19	23	28	34	40
l_8	8	9	10	13	15
l_9	9	10	12	15	18
l_{10}	1.5	1.5	2	3	4
l_1 | l					
67	97				
80	110	116			
95	125	131	137		
112	142	148	154	162	
132		168	174	182	192
160			202	210	220
190				240	250
224					284
436				486	

Ordering Code (example):

Guide pillar with flange		=	3111.31.
Guide diameter d_1	50 mm	=	050.
Guide length l_1	132 mm	=	132
Order No		=	3111.31. 050. 132

subject to alterations

Guide pillar (Angle pin)

3110.11.

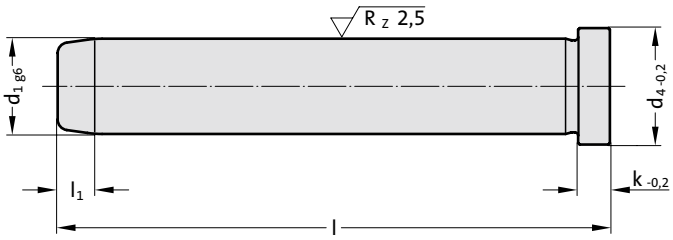



3110.11. Guide pillar (Angle pin)

d_1	8	9	10	12	14	15	16	18	20	22	24	30	32	40	50
d_4	10	12	12	16	18	18	20	22	24	26	28	36	36	48	58
k	3	3	3	6	8	8	8	8	8	15	15	15	15	15	15
l_1	4	4	4	7	7	7	7	7	7	7	7	7	7	10	10
l															
40	●	●	●	●			●								
60	●	●	●	●	●	●	●	●	●						
80	●	●	●	●	●	●	●	●	●	●	●				
100	●	●	●	●	●	●	●	●	●	●	●	●	●		
120		●	●	●	●	●	●	●	●	●	●	●	●		
140				●	●	●	●	●	●	●	●				
160				●	●	●	●	●	●	●	●	●	●	●	●
180					●	●	●	●	●	●	●				
200							●	●	●	●	●	●	●	●	●
220										●	●				
240								●	●	●	●	●	●	●	●
300										●	●	●	●	●	●
360												●	●	●	●

Ordering Code (example):

Guide pillar (Angle pin)		=3110.11.
Guide diameter d_1	18 mm	=018.
Length l	60 mm	=060
Order No		=3110.11.018.060

FIBRO

Guide sleeve



3100.09.

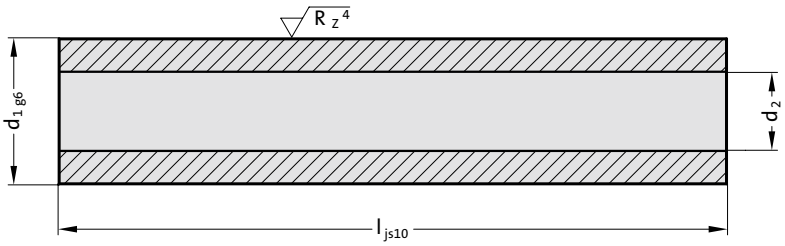

3100.09. Guide sleeve

d_1	10	14	18	24	30
d_2	6.2	8.3	10.4	12.5	16.5
l					
20	●				
30	●	●			
40	●	●	●		
50	●	●			
60	●	●	●	●	
70	●	●			
80	●	●	●	●	●
100	●	●	●	●	●
120	●	●	●	●	●
140	●	●	●	●	●
160		●	●	●	●
180		●	●	●	●
200			●	●	
220			●		●
240			●	●	
260					●
300					●

Ordering Code (example):

Guide sleeve		=3100.09.	
Guide diameter d_1	18 mm	=	018.
Length l	40 mm	=	040
Order No		=3100.09.018.040	

subject to alterations

Guide Bush, headed

3120.40.

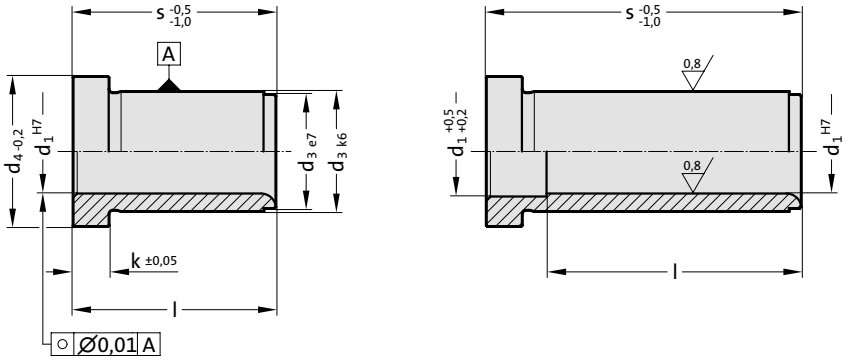



3120.40. Guide Bush, headed

d_1	s	l	d_3	d_4	k	d_1	s	l	d_3	d_4	k
9 10	9	9	14	16	3	22 24	36	36	30	35	6
9 10	12	12	14	16	3	22 24	46	46	30	35	6
9 10	17	17	14	16	3	22 24	56	56	30	35	6
9 10	22	22	14	16	3	22 24	66	66	30	35	6
9 10	27	27	14	16	3	22 24	76	76	30	35	6
9 10	36	36	14	16	3	22 24	86	86	30	35	6
9 10	46	46	14	16	3	22 24	96	96	30	35	6
9 10	56	46	14	16	3	22 24	116	96	30	35	6
9 10	66	46	14	16	3	22 24	136	96	30	35	6
12	17	17	18	23	6	22 24	156	96	30	35	6
12	22	22	18	23	6	30 32	27	27	42	47	6
12	27	27	18	23	6	30 32	36	36	42	47	6
12	36	36	18	23	6	30 32	46	46	42	47	6
12	46	46	18	23	6	30 32	56	56	42	47	6
12	56	56	18	23	6	30 32	66	66	42	47	6
14 15	12	12	20	25	6	30 32	76	76	42	47	6
14 15	17	17	20	25	6	30 32	86	86	42	47	6
14 15	22	22	20	25	6	30 32	96	96	42	47	6
14 15	27	27	20	25	6	30 32	116	116	42	47	6
14 15	36	36	20	25	6	30 32	136	116	42	47	6
14 15	46	46	20	25	6	30 32	156	116	42	47	6
14 15	56	56	20	25	6	30 32	176	116	42	47	6
14 15	66	56	20	25	6	40 42	46	46	54	60	10
14 15	76	56	20	25	6	40 42	56	56	54	60	10
14 15	86	56	20	25	6	40 42	66	66	54	60	10
14 15	96	56	20	25	6	40 42	76	76	54	60	10
16	17	17	22	27	6	40 42	86	86	54	60	10
16	22	22	22	27	6	40 42	96	96	54	60	10
16	27	27	22	27	6	40 42	116	116	54	60	10
16	36	36	22	27	6	40 42	136	136	54	60	10
16	46	46	22	27	6	40 42	156	136	54	60	10
16	56	56	22	27	6	40 42	196	136	54	60	10
18 20	17	17	26	31	6	40 42	246	136	54	60	10
18 20	22	22	26	31	6	50	76	76	66	72	10
18 20	27	27	26	31	6	50	96	96	66	72	10
18 20	36	36	26	31	6	50	116	116	66	72	10
18 20	46	46	26	31	6	50	136	136	66	72	10
18 20	56	56	26	31	6	50	156	136	66	72	10
18 20	66	66	26	31	6	50	196	136	66	72	10
18 20	76	76	26	31	6	60	76	76	80	86	20
18 20	86	76	26	31	6	60	96	96	80	86	20
18 20	96	76	26	31	6	60	116	116	80	86	20
18 20	116	76	26	31	6	60	136	136	80	86	20
22 24	17	17	30	35	6	60	156	136	80	86	20
22 24	22	22	30	35	6	60	196	136	80	86	20
22 24	27	27	30	35	6	60	246	136	80	86	20

Ordering Code (example):

Guide Bush, headed		=3120.40.
d_1	22 mm =	022.
Length s	17 mm =	017
Order No		=3120.40.022.017

Locating guide bush, headed



3120.42.

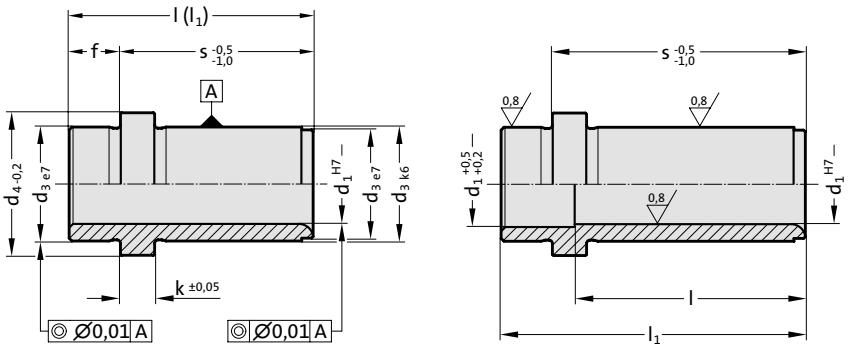

3120.42. Locating guide bush, headed

d_1	s	l	l_1	d_3	d_4	f	k	d_1	s	l	l_1	d_3	d_4	f	k
9 10	12	15	15	14	16	3	3	22 24	36	45	45	30	35	9	6
9 10	17	20	20	14	16	3	3	22 24	46	55	55	30	35	9	6
9 10	22	25	25	14	16	3	3	22 24	56	65	65	30	35	9	6
9 10	27	30	30	14	16	3	3	22 24	66	75	75	30	35	9	6
9 10	36	39	39	14	16	3	3	22 24	76	85	85	30	35	9	6
9 10	46	46	49	14	16	3	3	22 24	86	95	95	30	35	9	6
9 10	56	46	59	14	16	3	3	22 24	96	105	105	30	35	9	6
9 10	66	46	69	14	16	3	3	22 24	116	96	125	30	35	9	6
14 15	17	26	26	20	25	9	6	22 24	136	96	145	30	35	9	6
14 15	22	31	31	20	25	9	6	22 24	156	96	165	30	35	9	6
14 15	27	36	36	20	25	9	6	30 32	27	36	36	42	47	9	6
14 15	36	45	45	20	25	9	6	30 32	36	45	45	42	47	9	6
14 15	46	55	55	20	25	9	6	30 32	46	55	55	42	47	9	6
14 15	56	56	65	20	25	9	6	30 32	56	65	65	42	47	9	6
14 15	66	56	75	20	25	9	6	30 32	66	75	75	42	47	9	6
14 15	76	56	85	20	25	9	6	30 32	76	85	85	42	47	9	6
14 15	86	56	95	20	25	9	6	30 32	86	95	95	42	47	9	6
14 15	96	56	105	20	25	9	6	30 32	96	105	105	42	47	9	6
14 15	116	56	125	20	25	9	6	30 32	116	125	125	42	47	9	6
18 20	17	26	26	26	31	9	6	30 32	136	116	145	42	47	9	6
18 20	22	31	31	26	31	9	6	30 32	156	116	165	42	47	9	6
18 20	27	36	36	26	31	9	6	30 32	176	116	185	42	47	9	6
18 20	36	45	45	26	31	9	6	30 32	196	116	205	42	47	9	6
18 20	46	55	55	26	31	9	6	40 42	46	58	58	54	60	12	10
18 20	56	65	65	26	31	9	6	40 42	56	68	68	54	60	12	10
18 20	66	75	75	26	31	9	6	40 42	66	78	78	54	60	12	10
18 20	76	76	85	26	31	9	6	40 42	76	88	88	54	60	12	10
18 20	86	76	95	26	31	9	6	40 42	86	98	98	54	60	12	10
18 20	96	76	105	26	31	9	6	40 42	96	108	108	54	60	12	10
18 20	116	76	125	26	31	9	6	40 42	116	128	128	54	60	12	10
18 20	136	76	145	26	31	9	6	40 42	136	136	148	54	60	12	10
22 24	17	26	26	30	35	9	6	40 42	156	136	168	54	60	12	10
22 24	22	31	31	30	35	9	6	40 42	196	136	208	54	60	12	10
22 24	27	36	36	30	35	9	6	40 42	246	136	258	54	60	12	10

Ordering Code (example):

Locating guide bush, headed		=3120.42.	
Guide diameter d_1	22 mm	=	022.
Length with collar s	17	=	017
Order No		=3120.42.022.017	

subject to alterations

Ball bearing guide, complete

3120.65.

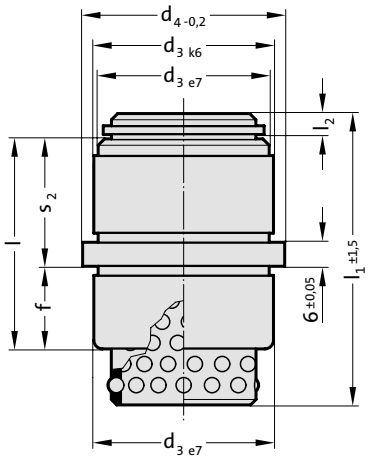

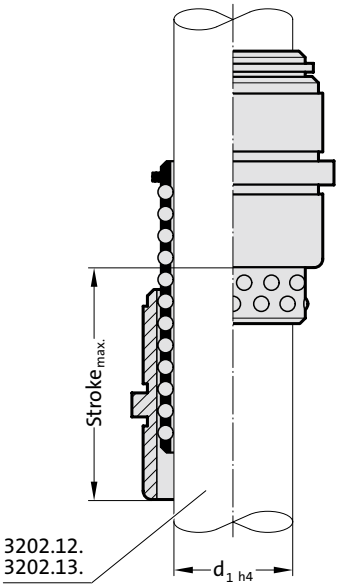



3120.65. Ball bearing guide, complete

d_1	l	l_1	l_2	d_3	d_4	f	s_2	$Stroke_{max.}$
12	24	40	2.1	22	26	6	18	50
12	24	56	2.1	22	26	6	18	82
18	34	45	3	30	35	11	23	44
18	34	56	3	30	35	11	23	66
18	34	71	3	30	35	11	23	96
30	54	56	4.8	46	52	21	33	32
30	54	75	4.8	46	52	21	33	78
30	54	95	4.8	46	52	21	33	110

Ordering Code (example):

Ball bearing guide, complete		=3120.65.
Guide diameter d_1	18 mm =	018.
Total length of ball bearing guide l_1	45 mm =	045
Order No		=3120.65.018.045

Guide bush with collar, Bronze with solid lubricant



2087.72.

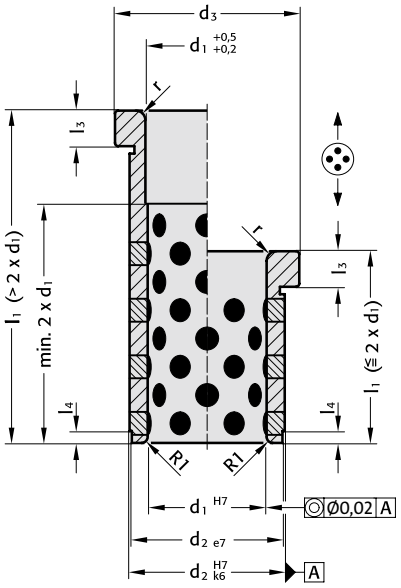

Material:
Bronze with solid lubricant, oilless lubricating.

Note:
Assembly guide lines / Dimensional requirements and tolerances at the end of chapter D.

Attention:
Bushes can only be used with axial motion!

2087.72. Guide bush with collar, Bronze with solid lubricant

d_1	9 10	12	14 15	16	18 20	22 24	25	30 32	40 42	50	60
d_2	14	18	20	22	26	30	32	42	54	66	80
d_3	16	23	25	27	31	35	38	47	60	72	86
r	0.5	1	1	2	2	3	3	3	3	3	3
l_3	3	6	6	6	6	6	6	6	10	10	20
l_4	1.5	2	2	2	2	3	3	4	5	5	5
l_1											
12	●										
17	●	●	●	●	●	●					
22	●	●	●	●	●	●					
27	●	●	●	●	●	●		●			
36	●	●	●	●	●	●		●			
46	●	●	●	●	●	●	●	●	●		
56	●	●	●	●	●	●	●	●	●		
66					●	●	●	●	●		
76					●	●	●	●	●	●	
86						●	●	●	●	●	
96						●		●	●	●	●
116								●	●	●	●
136									●	●	●
156									●	●	●
196										●	●

Ordering Code (example):

Guide bush with collar, Bronze with solid lubricant		=2087.72.
Guide diameter d_1	22 mm =	022.
Total length l_1	17 mm =	017
Order No		=2087.72.022.017

subject to alterations

Guide bush with collar, Bronze with solid lubricant

2087.70. Guide bush with collar, Bronze with solid lubricant

d_1	9 10	14 15	18 20	22 24	30 32	40 42
d_2	14	20	26	30	42	54
d_3	16	25	31	35	47	60
l_3	3	6	6	6	6	10
l_4	1.5	2	2	3	4	5
l_5	3	6	8	8	8	12
r	0.5	1	2	3	3	3
l_1 l_2						
15 12	●					
20 17	●					
25 22	●					
30 27	●					
39 36	●					
49 46	●					
59 56	●					
69 66	●					
23 17		●				
28 22		●				
33 27		●				
42 36		●				
52 46		●				
62 56		●				
72 66		●				
82 76		●				
92 86		●				
25 17			●	●		
30 22			●	●		
35 27			●	●	●	
44 36			●	●	●	
54 46			●	●	●	
64 56			●	●	●	
74 66			●	●	●	
84 76			●	●	●	
94 86			●	●	●	
104 96			●	●	●	
124 116			●	●	●	
144 136				●	●	
164 156				●		
58 46						●
68 56						●
78 66						●
88 76						●
98 86						●
108 96						●
128 116						●
148 136						●
168 156						●
208 196						●



2087.70.

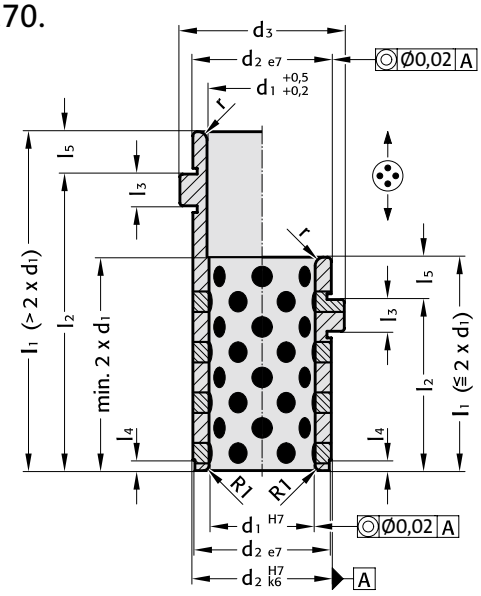

Material:

Bronze with solid lubricant, oilless lubricating.

Note:

Assembly guide lines / Dimensional requirements and tolerances at the end of chapter D.

Attention:

Bushes can only be used with axial motion!

Ordering Code (example):

Guide bush with collar, Bronze with solid lubricant		=2087.70.
Guide diameter d_1	22 mm =	022.
Length with collar l_2	17 mm =	017
Order No		=2087.70. 022. 017

Guide bush with collar, Bronze with solid lubricant



2087.71.

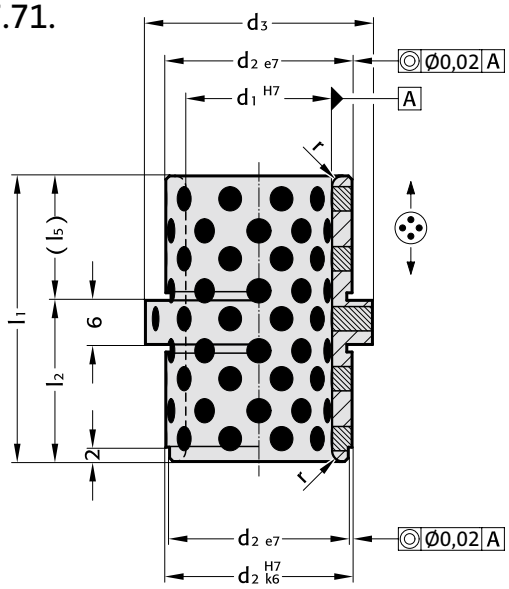

Material:

Bronze with solid lubricant, oilless lubricating.

Note:

Assembly guide lines / Dimensional requirements and tolerances at the end of chapter D.

Attention:

Bushes can only be used with axial motion!

2087.71. Guide bush with collar, Bronze with solid lubricant

d_1	14 15	18 20	22 24	30 32
d_2	20	26	30	42
d_3	25	31	35	47
r	1	1.5	2	2
l_1	26	39	49	63
l_2	17	22	27	36
l_5	9	17	22	27

Ordering Code (example):

Guide bush with collar, Bronze with solid lubricant		=2087.71.
Guide diameter d_1	22 mm =	022.
Length with collar l_2	27 mm =	027
Order No		=2087.71.022.027

subject to alterations

Guide bush with collar, Bronze with solid lubricant

2087.73.

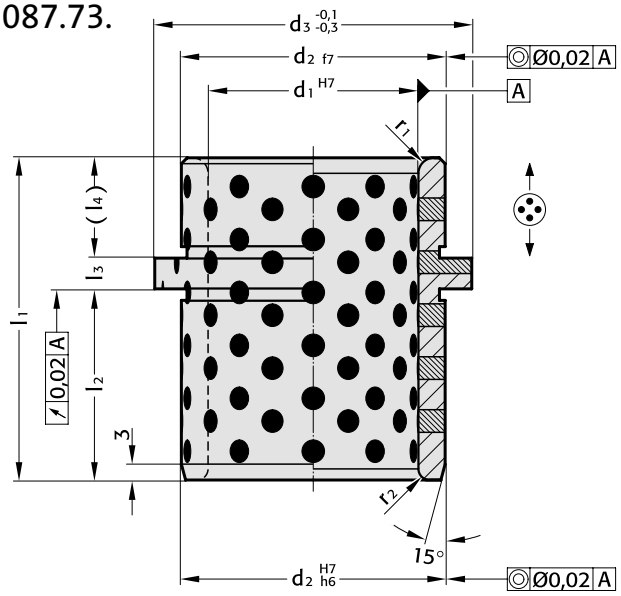



Material:
Bronze with solid lubricant, oilless lubricating.

Note:
Assembly guide lines / Dimensional requirements and tolerances at the end of chapter D.

Attention:
Bushes can only be used with axial motion!

2087.73. Guide bush with collar, Bronze with solid lubricant

d_1	25	30	40	40	50	50	60	63	63	63
d_2	35	42	50	50	63	63	80	80	80	80
d_3	40	47	60	60	72	72	86	90	90	90
r_1	3	3	4	4	4	4	3	4	4	4
r_2	2	2	2	2	3	3	3	3	3	3
l_1	43	43	60	64	77	92	78	95	100	108
l_2	24	24	35.5	39.5	44.5	55.5	49	55.5	62.5	62.5
l_3	7.5	7.5	6	6	8	8	7.5	8	8	8
l_4	11.5	11.5	18.5	18.5	24.5	28.5	21.5	31.5	29.5	37.5

Ordering Code (example):

Guide bush with collar, Bronze with solid lubricant		=2087.73.
Guide diameter d_1	50 mm=	050.
Total length l_1	77 mm=	077
Order No		=2087.73.050.077

Guide bush, Bronze with solid lubricant



3120.70.

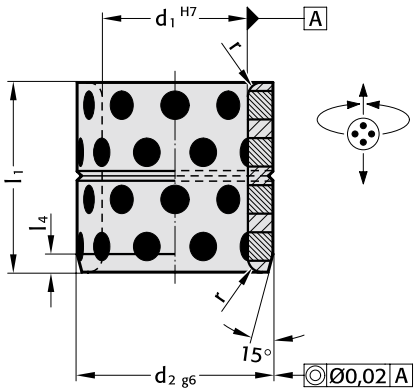

Material:
Bronze with solid lubricant, oilless lubricating.

Note:
Bushes can be used radially and axially.
Assembly guide lines / Dimensional requirements and tolerances at the end of chapter D.

Fixing:
Connecting with adhesive or if needed secure with threaded pin or flat mushroom head screw 2192.61.

3120.70. Guide bush, Bronze with solid lubricant

d_1	8	10	10	12	13	14	15	16	18	19	20	20	20	24	25	25	25	28	30	30	30	31.5	32	35	35	38	40	40
d_2	12	14	15	18	19	20	21	22	24	25	26	28	30	32	32	33	35	38	38	40	42	40	42	44	45	48	50	55
r	0.5	0.5	0.5	0.5	0.5	0.5	0.75	0.75	0.75	0.75	0.75	0.75	0.75	0.75	0.75	0.75	0.75	0.75	0.75	0.75	0.75	0.75	0.75	0.75	0.75	1.5	1.5	1.5
l_4	2	2	2	2	2	2	2	2	2	4	4	4	4	4	4	4	4	4	4	4	4	4	4	4	4	4	4	4
l_1																												
8	●	●																										
10	●	●	●	●	●	●	●	●																				
12	●	●		●		●	●	●																				
15	●	●		●	●	●	●	●	●			●																
16				●	●		●	●	●			●	●			●	●											
20		●		●	●	●	●	●	●			●	●			●	●		●	●					●		●		
25				●		●	●	●	●			●	●			●	●		●	●				●	●		●	●	●
30				●		●	●	●	●			●	●			●	●	●	●	●		●	●	●	●	●	●	●	●
35								●	●			●	●			●	●		●	●				●	●		●	●	●
37										●		●																	
40								●	●		●	●	●			●	●	●	●	●		●	●	●	●	●	●	●	●
47														●		●													
50												●			●	●	●		●	●				●	●		●	●	●
60																●			●	●	●		●	●	●		●	●	●
70																											●	
77																										●	●	
80																											●	

Ordering Code (example):

Guide bush, Bronze with solid lubricant		=3120.70.
Guide diameter d_1	40 mm	=040.
External diameter d_2	55 mm	=055.
Installation length l_1	25 mm	=025
Order No		=3120.70.040.055.025

subject to alterations

Guide bush, Bronze with solid lubricant

3120.70.

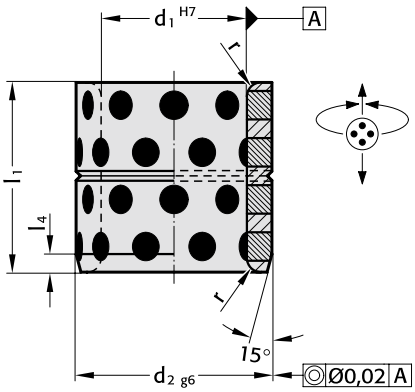



Material:
Bronze with solid lubricant, oilless lubricating.

Note:
Bushes can be used radially and axially.
Assembly guide lines / Dimensional requirements and tolerances at the end of chapter D.

Fixing:
Connecting with adhesive or if needed secure with threaded pin or flat mushroom head screw 2192.61.

3120.70. Guide bush, Bronze with solid lubricant

d_1	45	45	45	50	50	50	55	60	60	63	65	70	70	75	75	80	80	85	90	100	110	120	125	130	140	150	160
d_2	55	56	60	60	62	65	70	74	75	75	80	85	90	90	95	96	100	100	110	120	130	140	145	150	160	170	180
r	1.5	1.5	1.5	1.5	1.5	1.5	2	2	2	2	2	2	2	2	2	2	2	2	2	2	2	2	2	2	2	2	2
l_4	4	4	4	4	4	4	4	4	4	4	4	4	4	4	4	4	4	4	4	4	4	4	4	4	4	4	4
l_1																											
30	●	●	●	●	●	●		●	●																		
35	●	●	●	●	●			●	●			●															
40	●	●	●	●	●	●	●	●	●			●				●	●										
50	●	●	●	●	●	●	●	●	●		●	●	●			●	●										
60	●	●	●	●	●	●	●	●	●	●	●	●	●	●	●	●	●		●	●							
70			●	●	●	●	●	●	●	●	●	●	●	●	●	●	●		●	●							
80			●	●		●		●	●	●	●	●	●	●	●	●	●	●	●	●	●	●					
95				●																							
100						●			●			●		●	●	●	●		●	●	●	●	●	●	●	●	●	
120										●						●	●		●	●	●	●	●	●			
130																								●			
140																	●			●		●			●		
150																										●	●

Ordering Code (example):

Guide bush, Bronze with solid lubricant		=3120.70.
Guide diameter d_1	40 mm	=040.
External diameter d_2	55 mm	=055.
Installation length l_1	25 mm	=025
Order No		=3120.70.040.055.025

Guide bush, Bronze



3120.71.

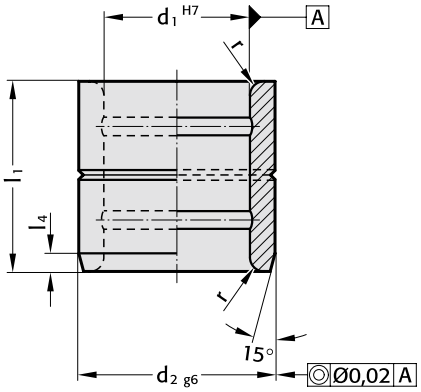

Material:
Bronze.

Note:
Bushes can be used radially and axially.
Assembly guide lines / Dimensional requirements and tolerances at the end of chapter D.

Fixing:
Connecting with adhesive or if needed secure with threaded pin or flat mushroom head screw 2192.61.

3120.71. Guide bush, Bronze

d_1	8	10	10	12	13	14	15	16	18	19	20	20	20	24	25	25	25	28	30	30	30	31.5	32	35	35	38	40	40
d_2	12	14	15	18	19	20	21	22	24	25	26	28	30	32	32	33	35	38	38	40	42	40	42	44	45	48	50	55
r	0.5	0.5	0.5	0.5	0.5	0.5	0.75	0.75	0.75	0.75	0.75	0.75	0.75	0.75	0.75	0.75	0.75	0.75	0.75	0.75	0.75	0.75	0.75	0.75	0.75	1.5	1.5	1.5
l_4	2	2	2	2	2	2	2	2	2	4	4	4	4	4	4	4	4	4	4	4	4	4	4	4	4	4	4	4
l_1																												
8	●	●																										
10	●	●	●	●	●	●	●	●																				
12	●	●		●		●	●	●																				
15	●	●		●	●	●	●	●	●			●																
16				●	●		●	●	●			●	●			●	●											
20		●		●	●	●	●	●	●			●	●			●	●		●	●					●		●	
25				●		●	●	●	●			●	●			●	●		●	●				●	●		●	●
30				●		●	●	●	●			●	●			●	●	●	●	●		●	●	●	●	●	●	●
35								●	●			●	●			●	●		●	●				●	●		●	●
37										●		●																
40								●	●		●	●	●			●	●	●	●	●		●	●	●	●	●	●	●
47														●		●												
50												●			●	●			●	●				●	●		●	●
60																●			●	●	●		●	●	●		●	●
70																											●	
77																										●	●	
80																											●	

Ordering Code (example):

Guide bush, Bronze		=3120.71.
Guide diameter d_1	40 mm	=040.
External diameter d_2	55 mm	=055.
Installation length l_1	25 mm	=025
Order No		=3120.71.040.055.025

subject to alterations

Guide bush, Bronze

3120.71.

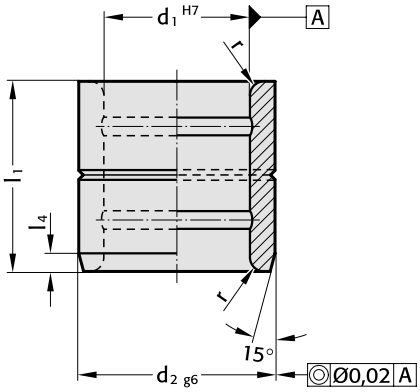



Material:
Bronze.

Note:
Bushes can be used radially and axially.
Assembly guide lines / Dimensional requirements and tolerances at the end of chapter D.

Fixing:
Connecting with adhesive or if needed secure with threaded pin or flat mushroom head screw 2192.61.

3120.71. Guide bush, Bronze

d_1	45	45	45	50	50	50	55	60	60	63	65	70	70	75	75	80	80	85	90	100	110	120	125	130	140	150	160
d_2	55	56	60	60	62	65	70	74	75	75	80	85	90	90	95	96	100	100	110	120	130	140	145	150	160	170	180
r	1.5	1.5	1.5	1.5	1.5	1.5	2	2	2	2	2	2	2	2	2	2	2	2	2	2	2	2	2	2	2	2	2
l_4	4	4	4	4	4	4	4	4	4	4	4	4	4	4	4	4	4	4	4	4	4	4	4	4	4	4	4
l_1																											
30	●	●	●	●	●	●		●	●																		
35	●	●	●	●	●			●	●			●															
40	●	●	●	●	●	●	●	●	●			●				●	●										
50	●	●	●	●	●	●	●	●	●		●	●	●			●	●										
60	●	●	●	●	●	●	●	●	●	●	●	●	●	●	●	●	●		●	●							
70			●	●	●	●	●	●	●	●	●	●	●	●	●	●	●		●	●							
80			●	●		●		●	●	●	●	●	●	●	●	●	●	●	●	●	●	●					
95				●																							
100						●			●			●		●	●	●	●		●	●	●	●	●	●	●	●	●	●
120										●						●	●		●	●	●	●	●	●			
130																								●			
140																	●			●		●			●		
150																										●	●

Ordering Code (example):

Guide bush, Bronze		=3120.71.
Guide diameter d_1	40 mm	=040.
External diameter d_2	55 mm	=055.
Installation length l_1	25 mm	=025
Order No		=3120.71.040.055.025

Rectangular guide, Steel with solid lubricant



3131.40.

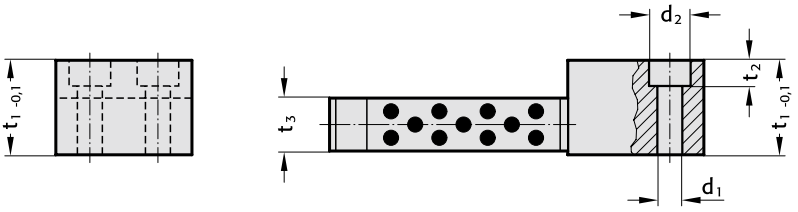

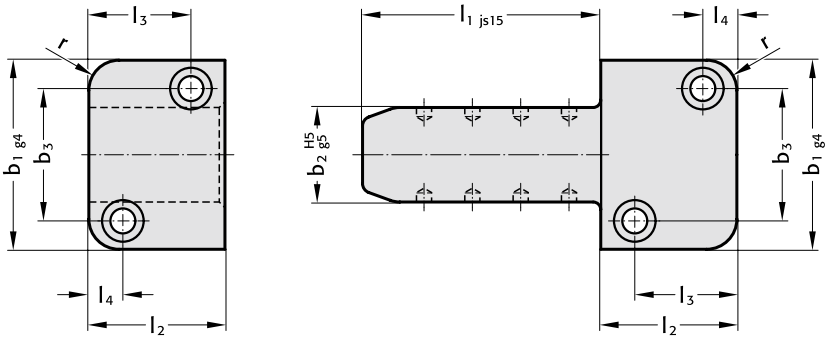

Material:

Steel with solid lubricant
Surface: case hardened, 580+40 HV 30

Steel
Surface: case hardened, 700+60 HV 30

Note:

The maximum operating temperature is 200°C.

3131.40. Rectangular guide, Steel with solid lubricant

Order No	l_2	b_2	l_1	b_1	r	t_1	t_2	t_3	d_1	d_2	b_3	l_3	l_4
3131.40.022.016.020	22	16	20	40	6	20	6.8	11	6.6	11	26	15	7
3131.40.022.016.040	22	16	40	40	6	20	6.8	11	6.6	11	26	15	7
3131.40.027.020.025	27	20	25	45	6	22	6.8	13	6.6	11	31	19	7
3131.40.027.020.050	27	20	50	45	6	22	6.8	13	6.6	11	31	19	7
3131.40.036.025.032	36	25	32	50	8	25	6.8	14	6.6	11	35	27	9
3131.40.036.025.063	36	25	63	50	8	25	6.8	14	6.6	11	35	27	9
3131.40.046.032.040	46	32	40	63	8	32	9	19	9	15	45	35	11
3131.40.046.032.080	46	32	80	63	8	32	9	19	9	15	45	35	11
3131.40.056.040.050	56	40	50	85	10	36	11	22	11	18	60	40	15
3131.40.056.040.100	56	40	100	85	10	36	11	22	11	18	60	40	15
3131.40.066.050.056	66	50	56	100	10	40	13	24	14	20	74	48	18
3131.40.066.050.112	66	50	112	100	10	40	13	24	14	20	74	48	18

subject to alterations

Rectangular guide, Steel with rollers

3131.80.

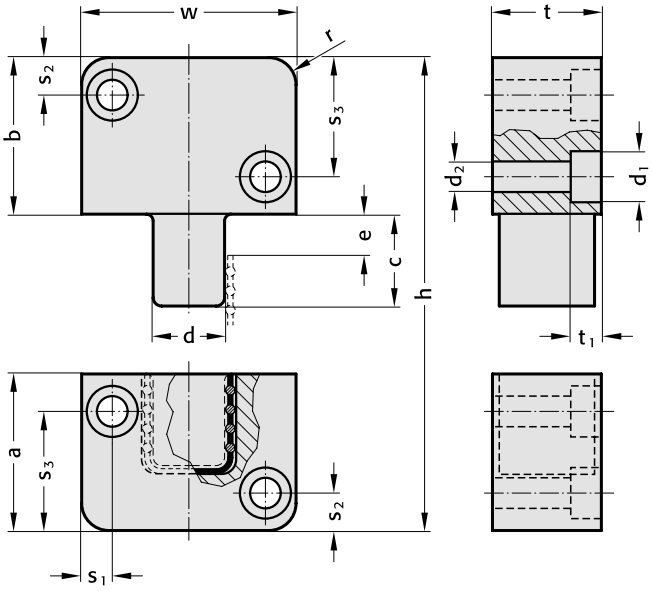



Description:

The rectangular guides with rollers guarantee the greatest precisionwhen their mould is moved together. The rectangular guides must always be installed in the outer area of the mould plates to ensure problem-free functionality.
Advantages: no play or friction, low maintenance and no lubrication

Material:

Steel
Hardness: 56-58 HRC
Surface: burnished

Note:

The maximum operating temperature is 150°C.

3131.80. Rectangular guide, Steel with rollers

Order No	t	w	a	b	c	d	e	h	r	s_1	s_2	s_3	d_1	d_2	t_1
3131.80.032.063	32	63	46	46	27	21	12.1	92	8	9	11	35	15	9	9
3131.80.040.100	40	100	66	66	36	33	19.5	132	10	13	18	48	20	13.5	13



Forming / Demoulding

Bolt guide



2967.10.

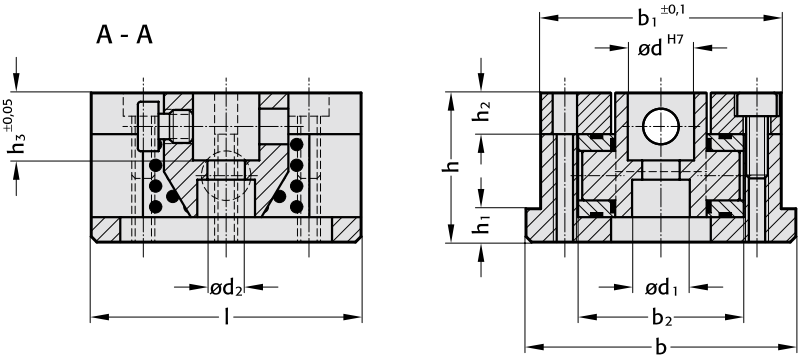

Application example

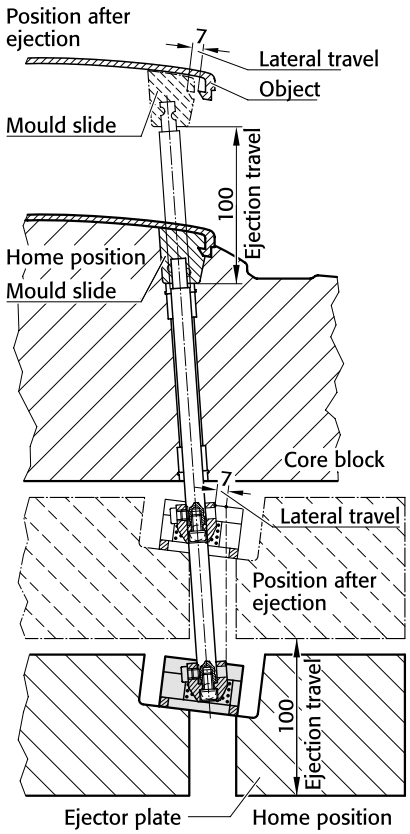

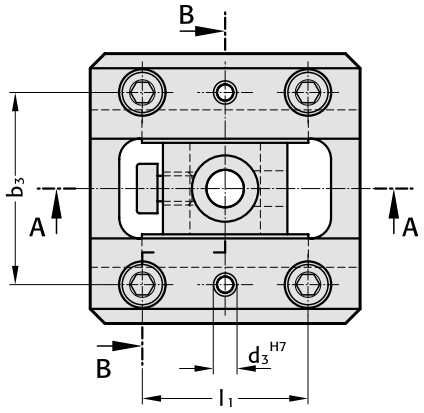

Mounting example

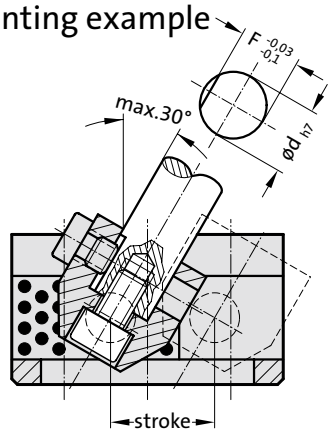

2967.10. Bolt guide

Order No	d	Stroke	b	l	h	b_1	b_2	b_3	l_1	h_1	h_2	h_3	d_1	d_2	d_3	F
2967.10.08.010	8	10	33	32	22	30	19	24	20	5	7	8	8	4	3	7
2967.10.10.018	10	18	45	45	27	40	25	32	30	5	8	10	10	5	4	9
2967.10.12.020	12	20	57	50	32	51	31	39	35	7	10	12	11	7	6	11
2967.10.16.025	16	25	65	65	36	58	38	46	40	8	10	16	14	9	6	14.5
2967.10.20.030	20	30	80	80	42	72	44	56	55	11	12	20	17	11	8	18
2967.10.25.035	25	35	93	90	50	85	52	66	65	15	15	25	20	14	10	22.5
2967.10.30.040	30	40	101	100	55	93	60	74	70	15	15	30	20	14	10	27
2967.10.35.045	35	45	120	120	62	110	70	85	80	15	18	35	20	14	10	32
2967.10.40.050	40	50	130	135	70	120	80	95	90	15	18	40	26	17.5	10	36
2967.10.45.055	45	55	140	150	80	130	90	105	110	15	20	45	26	17.5	10	40

subject to alterations

Ejector pin, hardened, DIN ISO 6751



237.1.

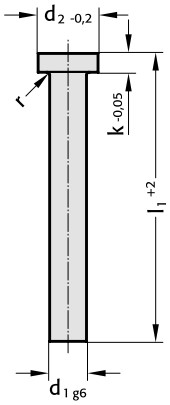

Material:

WS
Order No 237.1.
Hardness:
Shaft 60 ± 2 HRC
Head 45 ± 5 HRC

Description of FIBRO materials for tool and die components see at the beginning of Chapter E.

Execution:

Shank hardened and precision ground.
Head hot upset-forged.

237.1. Ejector pin, hardened, DIN ISO 6751

d_1	d_2	k	r	l_1 40	l_1 63	l_1 80	l_1 100	l_1 125	l_1 160	l_1 200	l_1 250	l_1 315	l_1 400	l_1 500
1	2.5	1.2	0.2	●	●	●	●	●	●	●				
1.1	2.5	1.2	0.2	●	●	●	●	●	●	●				
1.2	2.5	1.2	0.2	●	●	●	●	●	●	●				
1.3	3	1.5	0.2	●	●	●	●	●	●	●				
1.4	3	1.5	0.2	●	●	●	●	●	●	●				
1.5	3	1.5	0.2	●	●	●	●	●	●	●				
1.6	3	1.5	0.2	●	●	●	●	●	●	●				
1.7	3	1.5	0.2	●	●	●	●	●	●	●				
1.8	3	1.5	0.2	●	●	●	●	●	●	●				
1.9	3	1.5	0.2	●	●	●	●	●	●	●				
2	4	2	0.2	●	●	●	●	●	●	●	●	●		
2.2	4	2	0.2				●	●	●	●	●	●		
2.5	5	2	0.3	●	●	●	●	●	●	●	●	●		
2.7	5	2	0.3				●	●	●	●	●	●		
3	6	3	0.3	●	●	●	●	●	●	●	●	●	●	●
3.2	6	3	0.3				●	●	●	●	●	●	●	
3.5	7	3	0.3				●	●	●	●	●	●	●	
3.7	7	3	0.3				●	●	●	●	●	●	●	
4	8	3	0.3	●	●	●	●	●	●	●	●	●	●	●
4.2	8	3	0.3				●	●	●	●	●	●	●	
4.5	8	3	0.3				●	●	●	●	●	●	●	

Ordering Code (example):

Ejector pin, hardened, DIN ISO 6751		=	237.1.
Shank diameter d_1	5 mm	=	0500.
Length l_1	40 mm	=	040
Order No		=	237.1. 0500.040

subject to alterations

Ejector pin, hardened, DIN ISO 6751

Material:

WS
Order No 237.1.
Hardness:
Shaft 60 ± 2 HRC
Head 45 ± 5 HRC

Description of FIBRO materials for tool and die components see at the beginning of Chapter E.

Execution:

Shank hardened and precision ground.
Head hot upset-forged.

237.1.

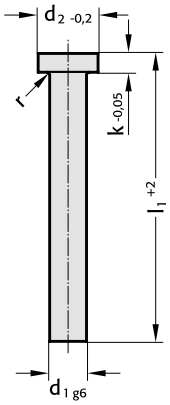



237.1. Ejector pin, hardened, DIN ISO 6751

d_1	d_2	k	r	l_1 40	l_1 63	l_1 80	l_1 100	l_1 125	l_1 160	l_1 200	l_1 250	l_1 315	l_1 400	l_1 500	l_1 630	l_1 800	l_1 1000	l_1 1250	l_1 1600
4.7	8	3	0.3				●	●	●	●	●	●	●						
5	10	3	0.3	●	●	●	●	●	●	●	●	●	●	●	●	●			
5.2	10	3	0.3				●	●	●	●	●	●	●	●					
5.5	10	3	0.3				●	●	●	●	●	●	●	●					
6	12	5	0.5	●	●	●	●	●	●	●	●	●	●	●	●	●			
6.2	12	5	0.5				●	●	●	●	●	●	●	●	●				
6.5	12	5	0.5				●	●	●	●	●	●	●	●					
7	12	5	0.5				●	●	●	●	●	●	●	●	●				
8	14	5	0.5		●	●	●	●	●	●	●	●	●	●	●	●	●	●	●
8.2	14	5	0.5				●	●	●	●	●	●	●	●	●	●			
8.5	14	5	0.5				●	●	●	●	●	●	●	●	●				
9	14	5	0.5				●	●	●	●	●	●	●	●	●				
10	16	5	0.5			●	●	●	●	●	●	●	●	●	●	●	●	●	●
10.2	16	5	0.5				●	●	●	●	●	●	●	●	●				
10.5	16	5	0.5				●	●	●	●	●	●	●	●	●				
11	16	5	0.5						●	●	●	●	●	●	●				
12	18	7	0.8			●	●	●	●	●	●	●	●	●	●	●	●		
12.2	18	7	0.8					●	●	●	●	●	●	●					
12.5	18	7	0.8				●	●	●	●	●	●	●	●	●				
14	22	7	0.8			●	●	●	●	●	●	●	●	●	●	●	●		
16	22	7	0.8				●	●	●	●	●	●	●	●	●	●	●		
18	24	7	0.8						●	●	●	●	●	●	●				
20	26	8	1						●	●	●	●	●	●	●	●	●		

Ordering Code (example):

Ejector pin, hardened, DIN ISO 6751		=237.1.
Shank diameter d_1	5 mm	= 0500.
Length l_1	40 mm	= 040
Order No		=237.1. 0500.040

Ejector pin, nitrided, DIN ISO 6751



237.8.

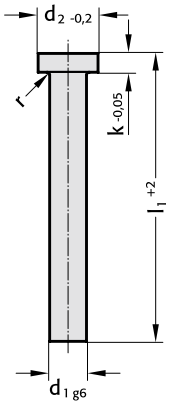

Material:

NWA
Order No 237.8.
Hardness:
Shaft* ≥ 950 HV 0,3
Head 45 ± 5 HRC
Tensile Strength (core) > 1400 N/mm²

Description of FIBRO materials for tool and die components see at the beginning of Chapter E.

Execution:

Shank nitrided and precision ground.
Head hot upset-forged.

Note:

*Owing to thinness of nitrided skin, hardness testing on shank restricted to Vickers only.
Test load = 3 N max.

237.8. Ejector pin, nitrided, DIN ISO 6751

d_1	d_2	k	r	l_1 100	l_1 125	l_1 160	l_1 200	l_1 250	l_1 315	l_1 400	l_1 500	l_1 630	l_1 800
1.5	3	1.5	0.2	●	●	●	●						
2	4	2	0.2	●	●	●	●	●					
2.2	4	2	0.2	●	●	●	●						
2.4	5	2	0.2	●	●	●	●	●	●				
2.5	5	2	0.3	●	●	●	●	●	●				
2.7	5	2	0.3	●	●	●	●						
2.9	5	2	0.3	●	●	●	●	●	●				
3	6	3	0.3	●	●	●	●	●	●	●	●		
3.2	6	3	0.3	●	●	●	●	●	●	●			
3.4	6	3	0.3	●	●	●	●	●	●				
3.5	7	3	0.3	●	●	●	●	●	●	●			
3.7	7	3	0.3	●	●	●	●	●	●	●			
3.9	7	3	0.3	●	●	●	●	●	●				
4	8	3	0.3	●	●	●	●	●	●	●	●		
4.2	8	3	0.3	●	●	●	●	●	●	●			
4.4	8	3	0.3	●	●	●	●	●	●				
4.5	8	3	0.3	●	●	●	●	●	●	●			
4.7	8	3	0.3	●	●	●	●	●	●				
4.9	8	3	0.3	●	●	●	●	●	●				
5	10	3	0.3	●	●	●	●	●	●	●	●	●	●
5.2	10	3	0.3	●	●	●	●	●	●	●	●		
5.4	10	3	0.3	●	●	●	●	●	●				
5.5	10	3	0.3	●	●	●	●	●	●	●	●		
5.7	10	3	0.3	●	●	●	●	●	●				
5.9	10	3	0.3	●	●	●	●	●	●				
6	12	5	0.5	●	●	●	●	●	●	●	●	●	●

Ordering Code (example):

Ejector pin, nitrided, DIN ISO 6751		=	237.8.
Shank diameter d_1	6.2 mm	=	0620.
Length l_1	100 mm	=	100
Order No		=	237.8. 0620.100

subject to alterations

Ejector pin, nitrided, DIN ISO 6751

Material:

NWA
Order No 237.8.
Hardness:
Shaft* ≥ 950 HV 0,3
Head 45 ± 5 HRC
Tensile Strength (core) > 1400 N/mm²

Description of FIBRO materials for tool and die components see at the beginning of Chapter E.

Execution:

Shank nitrided and precision ground.
Head hot upset-forged.

Note:

*Owing to thinness of nitrided skin, hardness testing on shank restricted to Vickers only.
Test load = 3 N max.

237.8.

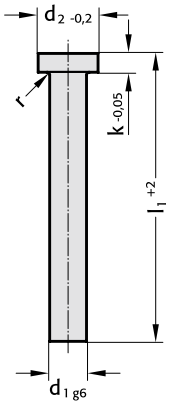



237.8. Ejector pin, nitrided, DIN ISO 6751

d_1	d_2	k	r	l_1 100	l_1 125	l_1 160	l_1 200	l_1 250	l_1 315	l_1 400	l_1 500	l_1 630	l_1 800	l_1 1000
6.2	12	5	0.5	●	●	●	●	●	●	●	●	●		
6.5	12	5	0.5	●	●	●	●	●	●	●	●			
6.7	12	5	0.5	●	●	●	●	●	●					
6.9	12	5	0.5	●	●	●	●	●	●					
7	12	5	0.5	●	●	●	●	●	●	●	●	●		
7.2	12	5	0.5	●	●	●	●	●	●					
7.8	12	5	0.5	●	●	●	●	●	●					
8	14	5	0.5	●	●	●	●	●	●	●	●	●	●	●
8.2	14	5	0.5	●	●	●	●	●	●	●	●	●	●	
8.4	14	5	0.5	●	●	●	●	●	●					
8.5	14	5	0.5	●	●	●	●	●	●	●	●	●		
9	14	5	0.5	●	●	●	●	●	●	●	●	●		
9.7	14	5	0.5	●	●	●	●	●	●					
10	16	5	0.5	●	●	●	●	●	●	●	●	●	●	●
10.2	16	5	0.5	●	●	●	●	●	●	●	●	●	●	
10.5	16	5	0.5	●	●	●	●	●	●	●	●	●		
11	16	5	0.5	●	●	●	●	●	●	●	●	●		
12	18	7	0.8	●	●	●	●	●	●	●	●	●	●	●
12.2	18	7	0.8	●	●	●	●	●	●	●	●	●	●	
12.5	18	7	0.8	●	●	●	●	●	●	●	●	●	●	
14	22	7	0.8	●	●	●	●	●	●	●	●	●	●	●
16	22	7	0.8	●	●	●	●	●	●	●	●	●	●	●
18	24	7	0.8			●	●	●	●	●	●	●	●	●
20	26	8	1			●	●	●	●	●	●	●	●	●
25	32	10	1				●	●	●	●	●	●	●	●
32	40	10	1				●	●	●	●	●	●	●	●

Ordering Code (example):

Ejector pin, nitrided, DIN ISO 6751		=	237.8.
Shank diameter d_1	6.2 mm	=	0620.
Length l_1	100 mm	=	100
Order No		=	237.8. 0620.100

Ejector pin, hardened, round stepped, DIN ISO 8694



238.1.

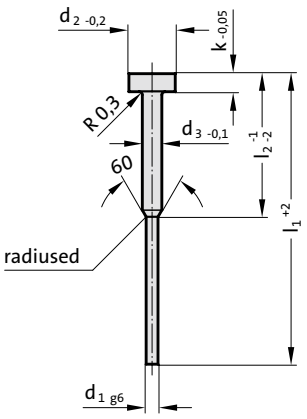

Material:

WS
Order No 238.1.
Hardness:
Shaft 60 ± 2 HRC
Head 45 ± 5 HRC

Description of FIBRO materials for tool and die components see at the beginning of Chapter E.

Execution:

Shank hardened and precision ground.
Head hot upset-forged.

238.1. Ejector pin, hardened, round stepped, DIN ISO 8694

				l_1	63	80	100	125	160	200
d_1	d_2	d_3	k	l_2	30	32	50	50	63	80
0.8	4	2	2		●	●	●	●	●	
0.9	4	2	2		●	●	●	●	●	
1	4	2	2		●	●	●	●	●	●
1.1	4	2	2		●	●	●	●	●	●
1.2	4	2	2		●	●	●	●	●	●
1.3	4	2	2		●	●	●	●	●	●
1.4	4	2	2		●	●	●	●	●	●
1.5	6	3	3		●	●	●	●	●	●
1.6	6	3	3			●	●	●	●	●
1.7	6	3	3			●	●	●	●	●
1.8	6	3	3			●	●	●	●	●
1.9	6	3	3			●	●	●	●	●
2	6	3	3			●	●	●	●	●
2.1	6	3	3				●	●	●	●
2.2	6	3	3			●	●	●	●	●
2.3	6	3	3				●	●	●	●
2.4	6	3	3				●	●	●	●
2.5	6	3	3				●	●	●	●

Ordering Code (example):

Ejector pin, hardened, round stepped, DIN ISO 8694		=	238.1.
Diameter d_1	1.7 mm	=	0170.
Length l_1	80 mm	=	080
Order No		=	238.1. 0170. 080

subject to alterations

Ejector pin, nitrided, round stepped, DIN ISO 8694

Material:

NWA
Order No 238.8.
Hardness:
Shaft* ≥ 950 HV 0,3
Head 45 ± 5 HRC
Tensile Strength (core) > 1400 N/mm²

Description of FIBRO materials for tool and die components see at the beginning of Chapter E.

Execution:

Shank nitrided and precision ground.
Head hot upset-forged.

Note:

*Owing to thinness of nitrided skin, hardness testing on shank restricted to Vickers only.
Test load = 3 N max.

238.8.

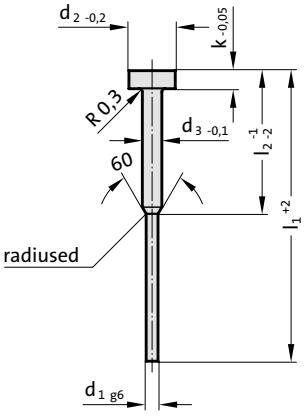



238.8. Ejector pin, nitrided, round stepped, DIN ISO 8694

				l_1	63	80	100	125	160	200
d_1	d_2	d_3	k	l_2	30	32	50	50	63	80
0.8	4	2	2		●	●	●	●	●	
0.9	4	2	2		●	●	●	●	●	
1	4	2	2		●	●	●	●	●	
1.1	4	2	2		●	●	●	●	●	
1.2	4	2	2		●	●	●	●	●	
1.3	4	2	2		●	●	●	●	●	
1.4	4	2	2		●	●	●	●	●	
1.5	6	3	3		●	●	●	●	●	●
1.6	6	3	3			●	●	●	●	●
1.7	6	3	3			●	●	●	●	●
1.8	6	3	3			●	●	●	●	●
1.9	6	3	3			●	●	●	●	●
2	6	3	3			●	●	●	●	●
2.2	6	3	3			●	●	●	●	●
2.5	6	3	3				●	●	●	●

Ordering Code (example):

Ejector pin, nitrided, round stepped, DIN ISO 8694		=238.8.
Diameter d_1	1.5 mm	= 0150.
Length l_1	63 mm	= 063
Order No		=238.8. 0150. 063

Ejector pin, hardened, similar to DIN 1530 Shape D



239.1.

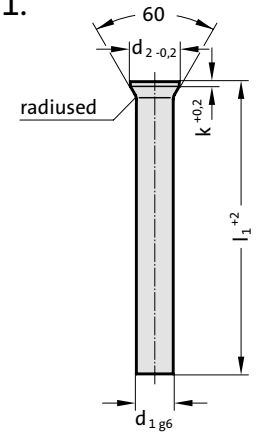

Material:

WS
Order No 239.1.
Hardness:
Shaft 60 ± 2 HRC
Head 45 ± 5 HRC

Description of FIBRO materials for tool and die components see at the beginning of Chapter E.

Execution:

Shank hardened and precision ground.
Head hot upset-forged.

239.1. Ejector pin, hardened, similar to DIN 1530 Shape D

d_1	d_2	k	l_1 40	l_1 60	l_1 71	l_1 80	l_1 100	l_1 125	l_1 160	l_1 200	l_1 250	l_1 315
0.8	1.4	0.5					●	●	●	●		
0.9	1.6	0.5					●	●	●	●		
1	1.8	0.5	●	●	●	●	●	●	●	●		
1.1	1.8	0.5			●		●	●	●	●		
1.2	2	0.5			●		●	●	●	●		
1.25	2	0.5					●	●	●	●		
1.3	2	0.5			●		●	●	●	●		
1.4	2.2	0.5			●		●	●	●	●		
1.5	2.2	0.5	●	●	●	●	●	●	●	●		
1.6	2.5	0.5			●		●	●	●	●		
1.7	2.5	0.5			●		●	●	●	●		
1.75	2.8	0.5					●	●	●	●		
1.8	2.8	0.5			●		●	●	●	●		
1.9	2.8	0.5			●		●	●	●	●		
2	3	0.5	●	●	●	●	●	●	●	●	●	
2.1	3.2	0.5			●		●	●	●	●		
2.2	3.2	0.5			●		●	●	●	●	●	
2.25	3.2	0.5					●	●	●	●		
2.3	3.5	0.5			●		●	●	●	●		
2.4	3.5	0.5			●		●	●	●	●		
2.5	3.5	0.5	●	●	●	●	●	●	●	●	●	
2.6	4	0.5			●		●	●	●	●		
2.7	4	0.5			●		●	●	●	●	●	
2.75	4	0.5			●		●	●	●	●		
2.8	4	0.5			●		●	●	●	●		
2.9	4	0.5			●		●	●	●	●		
3	4.5	0.5	●	●	●	●	●	●	●	●	●	●
3.1	4.5	0.5			●		●	●	●	●		
3.2	4.5	0.5			●		●	●	●	●		

Ordering Code (example):

Ejector pin, hardened, similar to DIN 1530 Shape D		=239.1.
Shank diameter d_1	3.2 mm =	0320.
Length l_1	71 mm =	071
Order No		=239.1. 0320.071

subject to alterations

Ejector pin, hardened, similar to DIN 1530 Shape D

Material:

WS
Order No 239.1.
Hardness:
Shaft 60 ± 2 HRC
Head 45 ± 5 HRC

Description of FIBRO materials for tool and die components see at the beginning of Chapter E.

Execution:

Shank hardened and precision ground.
Head hot upset-forged.

239.1.

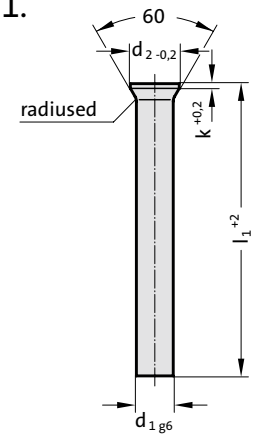



239.1. Ejector pin, hardened, similar to DIN 1530 Shape D

d_1	d_2	k	l_1 40	l_1 60	l_1 71	l_1 80	l_1 100	l_1 125	l_1 160	l_1 200	l_1 250	l_1 315
3.25	4.5	0.5			●		●	●	●	●		
3.5	5	0.5			●	●	●	●	●	●	●	●
3.6	5	0.5			●		●	●	●	●		
3.75	5	0.5					●	●	●	●		
4	5.5	0.5	●	●	●	●	●	●	●	●	●	●
4.1	5.5	0.5			●		●	●	●	●		
4.2	5.5	0.5			●		●	●	●	●		
4.25	5.5	0.5					●	●	●	●		
4.5	6	0.5			●		●	●	●	●		
4.6	6	0.5			●		●	●	●	●		
5	6.5	0.5	●	●	●	●	●	●	●	●	●	●
5.1	6.5	0.5			●		●	●	●	●		
5.2	6.5	0.5			●		●	●	●	●		
5.25	6.5	0.5					●	●	●	●		
5.5	7	0.5		●	●	●	●	●	●	●	●	●
6	8	0.5	●	●	●	●	●	●	●	●	●	●
6.2	8	1				●	●	●	●	●	●	●
6.5	9	1			●	●	●	●	●	●	●	●
7	9	1			●	●	●	●	●	●	●	●
7.5	10	1			●		●	●	●	●	●	●
8	10	1		●	●	●	●	●	●	●	●	●
8.2	10	1					●	●	●	●	●	●
8.5	11	1			●		●	●	●	●	●	●
9	11	1			●		●	●	●	●	●	●
10	12	1			●	●	●	●	●	●	●	●
12	14	1				●	●	●	●	●	●	●
14	16	1.5					●	●	●	●	●	●
16	18	1.5					●	●	●	●	●	●

Ordering Code (example):

Ejector pin, hardened, similar to DIN 1530 Shape D		=239.1.
Shank diameter d_1	3.2 mm	= 0320.
Length l_1	71 mm	= 071
Order No		=239.1. 0320.071

Ejector pin, nitrided, similar to DIN 1530 Shape D



239.8.

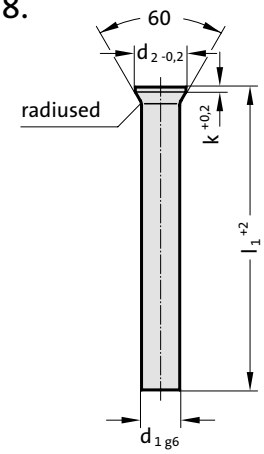

Material:

NWA
Order No 239.8.
Hardness:
Shaft* ≥ 950 HV 0,3
Head 45 ± 5 HRC
Tensile Strength (core) > 1400 N/mm²

Description of FIBRO materials for tool and die components see at the beginning of Chapter E.

Execution:

Shank nitrided and precision ground.
Head hot upset-forged.

Note:

*Owing to thinness of nitrided skin, hardness testing on shank restricted to Vickers only.
Test load = 3 N max.

239.8. Ejector pin, nitrided, similar to DIN 1530 Shape D

d_1	d_2	k	l_1	l_1	l_1	l_1	l_1	l_1
			100	125	160	200	250	315
3	4.5	0.5	●	●	●	●	●	
4	5.5	0.5	●	●	●	●	●	●
5	6.5	0.5	●	●	●	●	●	●
6	8	0.5	●	●	●	●	●	●
8	10	1	●	●	●	●	●	●
10	12	1	●	●	●	●	●	●
12	14	1	●	●	●	●	●	●
14	16	1.5			●	●	●	●
16	18	1.5			●	●	●	●

Ordering Code (example):

Ejector pin, nitrided, similar to DIN 1530 Shape D		=239.8.	
Shank diameter d_1	8 mm	=	0800.
Length l_1	100 mm	=	100
Order No		=239.8.	0800.100

subject to alterations

Flat ejector pin, hardened, similar to DIN ISO 8693



263.1.

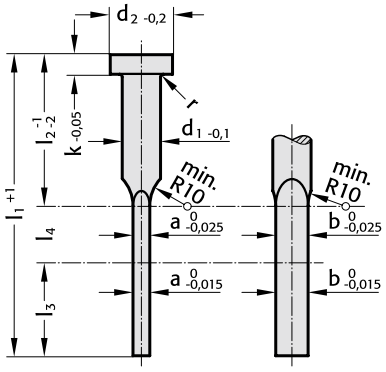

Material:

WS
Order No 263.1.
Hardness:
Shaft 60 ± 2 HRC
Head 45 ± 5 HRC

Description of FIBRO materials for tool and die components see at the beginning of Chapter E.

Execution:

Shank hardened and precision ground.
Head hot upset-forged.

Note:

Special dimensions a and b available on request.

263.1. Flat ejector pin, hardened, similar to DIN ISO 8693

d_1				4	4.2	4.2	4.2	5	5	5	6	6	6	6	8	8	8	10	10	12	12
d_2				8	8	8	8	10	10	10	12	12	12	12	14	14	14	16	16	18	18
k				3	3	3	3	3	3	3	5	5	5	5	5	5	5	5	5	7	7
r				0.3	0.3	0.3	0.3	0.3	0.3	0.3	0.5	0.5	0.5	0.5	0.5	0.5	0.5	0.5	0.5	0.8	0.8
a				1	0.8	1	1.2	1	1.2	1.5	1	1.2	1.5	2	1.2	1.5	2	1.5	2	2	2.5
b				3.5	3.8	3.8	3.8	4.5	4.5	4.5	5.5	5.5	5.5	5.5	7.5	7.5	7.5	9.5	9.5	11.5	11.5
l_1	l_2	l_3	l_4																		
63	30	25	10	●	●	●															
80	40	30	10	●	●	●	●	●	●		●	●									
100	50	40	10	●	●	●	●	●	●	●	●	●	●	●	●						
125	60	50	15	●	●	●	●	●	●	●	●	●	●	●	●	●					
160	80	50	30			●	●	●	●	●	●	●	●	●	●	●	●	●			
200	100	60	40				●	●	●	●	●	●	●	●	●	●	●	●	●	●	●
250	125	60	65												●	●	●	●	●	●	●
315	160	70	85																●	●	●

Ordering Code (example):

Flat ejector pin, hardened, similar to DIN ISO 8693		=	263.1.
Width a	1.5 mm	=	15.
Length b	5.5 mm	=	055.
Length l_1	100 mm	=	100
Order No		=	263.1. 15. 055.100

subject to alterations

Flat ejector pin, nitrided, similar to DIN ISO 8693

Material:

NWA
Order No 263.8.
Hardness:
Shaft* ≥ 950 HV 0,3
Head 45 ± 5 HRC
Tensile Strength (core) > 1400 N/mm²

Description of FIBRO materials for tool and die components see at the beginning of Chapter E.

Execution:

Shank nitrided and precision ground.
Head hot upset-forged.

Note:

*Owing to thinness of nitrided skin, hardness testing on shank restricted to Vickers only.
Test load = 3 N max.
Special dimensions a and b available on request.

263.8.

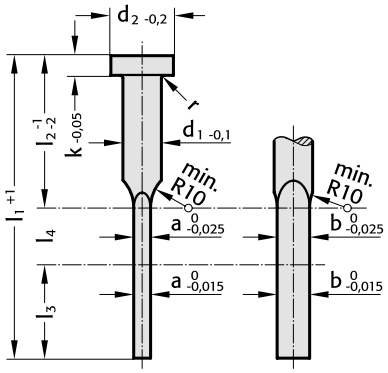



263.8. Flat ejector pin, nitrided, similar to DIN ISO 8693

d_1				4	4.2	4.2	4.2	5	5	5	6	6	6	6	8	8	8	10	10	12	12	16	16
d_2				8	8	8	8	10	10	10	12	12	12	12	14	14	14	16	16	18	18	22	22
k				3	3	3	3	3	3	3	5	5	5	5	5	5	5	5	5	7	7	7	7
r				0.3	0.3	0.3	0.3	0.3	0.3	0.3	0.5	0.5	0.5	0.5	0.5	0.5	0.5	0.5	0.5	0.8	0.8	0.8	0.8
a				1	0.8	1	1.2	1	1.2	1.5	1	1.2	1.5	2	1.2	1.5	2	1.5	2	2	2.5	2	2.5
b				3.5	3.8	3.8	3.8	4.5	4.5	4.5	5.5	5.5	5.5	5.5	7.5	7.5	7.5	9.5	9.5	11.5	11.5	15.5	15.5
l_1	l_2	l_3	l_4																				
63	30	25	10	●	●	●																	
80	40	30	10	●	●	●	●	●	●		●	●											
100	50	40	10	●	●	●	●	●	●	●	●	●	●		●								
125	60	50	15		●	●	●	●	●	●	●	●	●	●	●	●							
160	80	50	30			●	●	●	●	●	●	●	●	●	●	●	●	●					
200	100	60	40				●			●				●	●	●	●	●	●	●	●	●	●
250	125	60	65											●	●	●	●	●	●	●	●	●	●
315	160	70	85														●	●	●	●	●	●	●
400	200	95	105																●	●	●	●	●

Ordering Code (example):

Flat ejector pin, nitrided, similar to DIN ISO 8693		=	263.8.
Width a	2 mm	=	20.
Length b	5.5 mm	=	055.
Length l_1	125 mm	=	125
Order No		=	263.8. 20.055.125

FIBRO

Ejector sleeve, hardened, DIN ISO 8405



264.1.

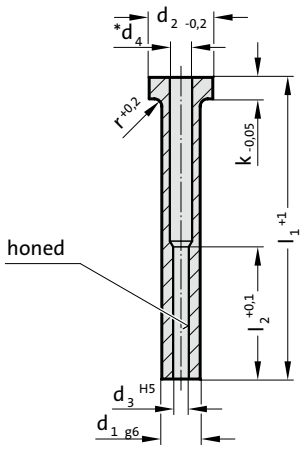

Material:

WS
Order No 264.1.
Hardness:
Shaft 60 ± 2 HRC
Head 45 ± 5 HRC

Description of FIBRO materials for tool and die components see at the beginning of Chapter E.

Execution:

Shank hardened and precision ground.
Head hot upset-forged.
Guide bore precision ground and honed.
*up to Ø d_4 = 4,5 tolerance +0,2/-0,1
*from Ø d_4 = 5 tolerance +0,3/-0,1

264.1. Ejector sleeve, hardened, DIN ISO 8405

d_1	d_3	d_4	d_2	k	r	l_2	l_1 70	l_1 75	l_1 80	l_1 90	l_1 100	l_1 125	l_1 150	l_1 175	l_1 200	l_1 225	l_1 250	l_1 275
2.5	1.25	1.6	5	2	0.3	20	●		●	●	●							
3	1.5	1.8	6	3	0.3	35		●			●	●	●					
3	1.6	1.9	6	3	0.3	35		●			●	●	●	●				
4	2	2.5	8	3	0.3	35		●			●	●	●	●	●	●		
4	2.2	2.4	8	3	0.3	35		●			●	●	●	●	●	●		
5	2.5	3	10	3	0.3	35		●			●	●	●	●	●	●		
5	2.7	3	10	3	0.3	45		●			●	●	●	●	●	●		
5	3	3.5	10	3	0.3	45		●			●	●	●	●	●	●	●	
5	3.2	3.5	10	3	0.3	45		●			●	●	●	●	●	●	●	
6	3.5	4	12	5	0.5	45		●			●	●	●	●	●	●	●	
6	3.7	4	12	5	0.5	45		●			●	●	●	●	●	●	●	
6	4	4.3	12	5	0.5	45		●			●	●	●	●	●	●	●	●
8	4.2	5	14	5	0.5	45		●			●	●	●	●	●	●	●	●
8	5	5.5	14	5	0.5	45		●			●	●	●	●	●	●	●	●
8	5.2	5.5	14	5	0.5	45		●			●	●	●	●	●	●	●	●
10	6	6.5	16	5	0.5	45		●			●	●	●	●	●	●	●	●
10	6.2	6.5	16	5	0.5	45		●			●	●	●	●	●	●	●	●
12	8	8.5	20	7	0.8	45		●			●	●	●	●	●	●	●	●
12	8.2	8.5	20	7	0.8	45		●			●	●	●	●	●	●	●	●
14	10	10.5	22	7	0.8	45		●			●	●	●	●	●	●	●	●
14	10.5	11	22	7	0.8	45		●			●	●	●	●	●	●	●	●
16	12	12.5	22	7	0.8	45		●			●	●	●	●	●	●	●	●
16	12.5	13	22	7	0.8	45		●			●	●	●	●	●	●	●	●

Ordering Code (example):

Ejector sleeve, hardened, DIN ISO 8405		=	264.1.
Diameter ejector pin d_3	4 mm	=	0400.
Length l_1	75 mm	=	075
Order No		=	264.1. 0400. 075

Ejector sleeve, nitrided, DIN ISO 8405

Material:

NWA
Order No 264.8.
Hardness:
Shaft** ≥ 950 HV 0,3
Head 45 ± 5 HRC
Tensile Strength (core) > 1400 N/mm²

Description of FIBRO materials for tool and die components see at the beginning of Chapter E.

Execution:

Shank nitrided and precision ground.
Head hot upset-forged.
Guide bore precision ground and honed.
*up to Ø d_4 = 4,5 tolerance +0,2/-0,1
*from Ø d_4 = 5 tolerance +0,3/-0,1

Note:

**Owing to thinness of nitrided skin, hardness testing on shank restricted to Vickers only.
Test load = 3 N max.

264.8.

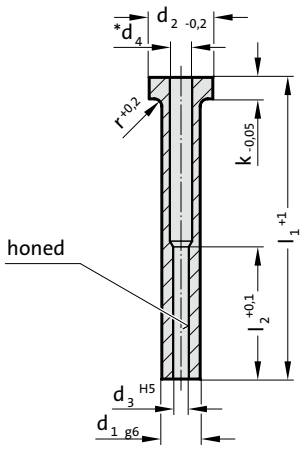



264.8. Ejector sleeve, nitrided, DIN ISO 8405

d_1	d_3	d_4	d_2	k	r	l_2	l_1 75	l_1 100	l_1 125	l_1 150	l_1 175	l_1 200	l_1 225	l_1 250	l_1 275
3	1.5	1.8	6	3	0.3	35	●	●	●	●					
3	1.6	1.9	6	3	0.3	35	●	●	●	●					
4	2	2.5	8	3	0.3	35	●	●	●	●					
4	2.2	2.4	8	3	0.3	35	●	●	●	●					
5	2.5	3	10	3	0.3	35	●	●	●	●					
5	2.7	3	10	3	0.3	45	●	●	●	●					
5	3	3.5	10	3	0.3	45	●	●	●	●	●				
5	3.2	3.5	10	3	0.3	45	●	●	●	●	●				
6	3.5	4	12	5	0.5	45	●	●	●	●	●				
6	3.7	4	12	5	0.5	45	●	●	●	●	●				
6	4	4.3	12	5	0.5	45	●	●	●	●	●	●			
8	4.2	5	14	5	0.5	45	●	●	●	●	●	●			
8	5	5.5	14	5	0.5	45	●	●	●	●	●	●			
8	5.2	5.5	14	5	0.5	45	●	●	●	●	●	●			
10	6	6.5	16	5	0.5	45	●	●	●	●	●	●	●	●	
10	6.2	6.5	16	5	0.5	45	●	●	●	●	●	●	●	●	
12	8	8.5	20	7	0.8	45	●	●	●	●	●	●	●	●	●
12	8.2	8.5	20	7	0.8	45	●	●	●	●	●	●	●	●	●
14	10	10.5	22	7	0.8	45		●	●	●	●	●	●	●	●
14	10.2	10.5	22	7	0.8	45		●	●	●	●	●	●	●	●
16	12	12.5	22	7	0.8	45		●	●	●	●	●	●	●	●

Ordering Code (example):

Ejector sleeve, nitrided, DIN ISO 8405		=	264.8.
Diameter ejector pin d_3	4 mm	=	0400.
Length l_1	75 mm	=	075
Order No		=	264.8. 0400. 075

Date stamp complete, embossed lettering



2280.01.

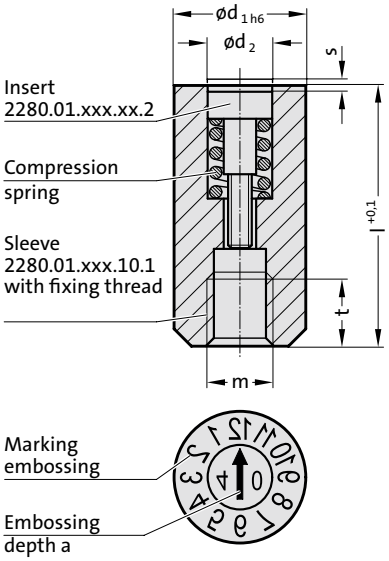

Mounting example

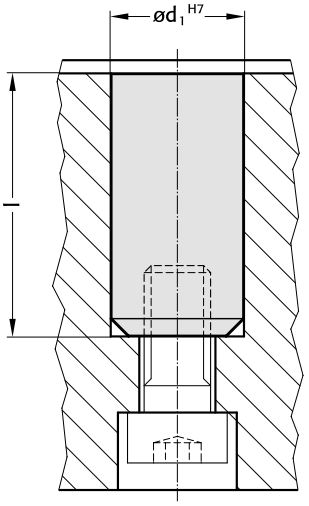

Material:

1.2767, hardened HRC 54±2, ground

Note:

The sleeve and insert can be ordered separately (see ordering example).

Description:

- sleeve with engraving
- adjustable insert with display arrow and year (can be rotated using an ordinary screwdriver)
- metric thread for fixing
- mirror image engraving

Mounting:

Fixing:
Screw in the insert in a clockwise direction until it is flush with the top edge and set to the required position.
Setting:
Set the insert by turning clockwise or anti-clockwise. When correctly set, the insert of a stamp with d_1 = 6 mm (.060.) is typically a maximum of 0.1 mm above or below the top edge of the sleeve.
Changing:
To change the insert turn it anti-clockwise to remove.

2280.01. Date stamp complete, embossed lettering

d_1	d_2	l	m	t	s	a
4	2.5	14	2	2	0.2	0.3
5	3.1	17	3	3	0.2	0.4
6	3.1	17	3	3	0.2	0.4
8	4.6	20	4	4	0.35	0.4
10	4.6	20	5	4	0.35	0.4
12	6.4	25	6	6	0.5	0.6
16	8.4	33	8	8	0.6	0.6

Ordering examples:

Date insert, complete	= 2280.
Standard version	= 01.
Sleeve diameter d_1 = 5	= 050.
Sleeve with display: Months (1-12)	= 10.
Insert with display: Arrow + year (variable) e.g. 2004	= 04
Order No	= 2280.01.050.10.04

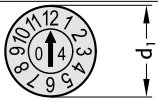

Date insert, Sleeve	= 2280.
Standard version	= 01.
Sleeve diameter d_1 = 5	= 050.
Sleeve with display: Months (1-12)	= 10.
Sleeve	= 1
Order No	= 2280.01.050.10.1

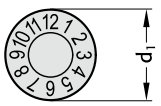

Date insert, Insert	= 2280.
Standard version	= 01.
Sleeve diameter d_1 = 5	= 050.
Insert with display: Arrow + year (variable) e.g. 2004	= 04.
Insert	= 2
Order No	= 2280.01.050.04.2



subject to alterations

Date stamp complete (short version), embossed lettering

Mounting example

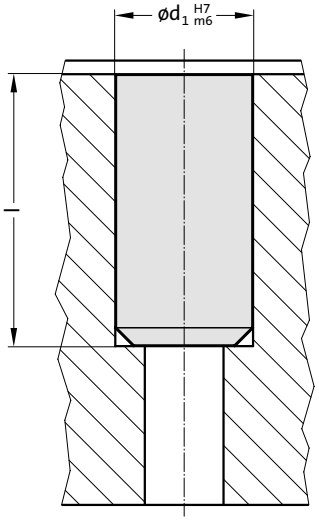

2280.02.

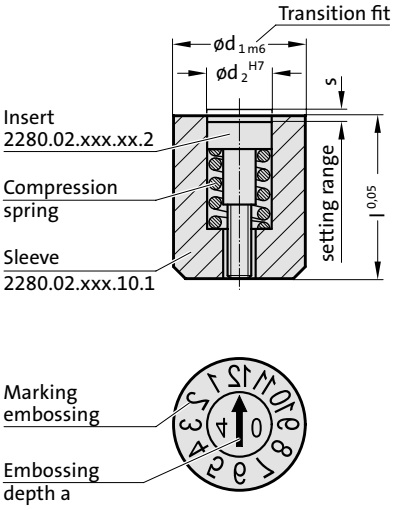



Material:

1.2767, hardened HRC 54±2, ground

Note:

The sleeve and insert can be ordered separately (see ordering example).

Description:

- sleeve with engraving
- adjustable insert with display arrow and year (can be rotated using an ordinary screwdriver)
- metric thread for fixing
- mirror image engraving

Mounting:

Fixing:
Screw in the insert in a clockwise direction until it is flush with the top edge and set to the required position.
Setting:
Set the insert by turning clockwise or anti-clockwise. When correctly set, the insert of a stamp with d_1 = 6 mm (.060.) is typically a maximum of 0.1 mm above or below the top edge of the sleeve.
Changing:
To change the insert turn it anti-clockwise to remove.

2280.02. Date stamp complete (short version), embossed lettering

d_1	d_2	l	s	a
2.6	1.4	4	0.2	0.3
3	1.5	4	0.2	0.3
4	2.1	5	0.25	0.3
5	3.1	8	0.2	0.4
6	3.1	8	0.2	0.4
8	4.4	10	0.25	0.4
10	5.2	12	0.35	0.4
12	6.2	14	0.35	0.6

Ordering examples:

Date insert, complete	= 2280.
Standard version	= 02.
Sleeve diameter d_1 = 5	= 050.
Sleeve with display: Months (1-12)	= 10.
Insert with display: Arrow + year (variable) e.g. 2004	= 04
Order No	= 2280.01.050.10.04

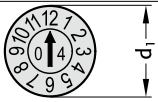

Date insert, Sleeve	= 2280.
Standard version	= 02.
Sleeve diameter d_1 = 5	= 050.
Sleeve with display: Months (1-12)	= 10.
Sleeve	= 1
Order No	= 2280.01.050.10.1

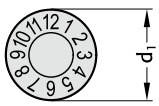

Date insert, Insert	= 2280.
Standard version	= 02.
Sleeve diameter d_1 = 5	= 050.
Insert with display: Arrow + year (variable) e.g. 2004	= 04.
Insert	= 2
Order No	= 2280.01.050.04.2



Quill holder for core tempering

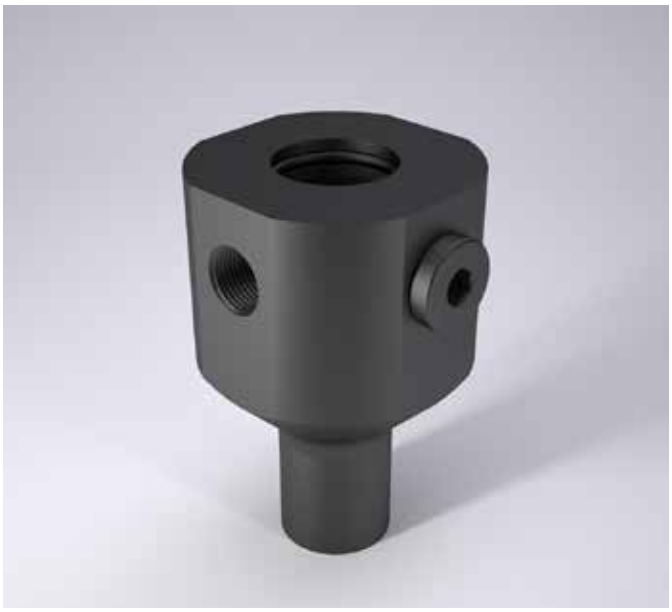

3820.10.

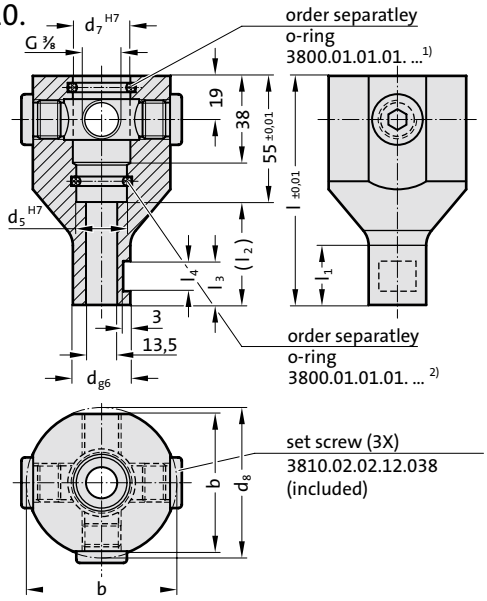

Description:

The quill holder is preferably used with bolt guide 2967.10. and quills with internal bore for slider tempering. 4 connections make it possible to implement tempering circuits either directly or in series.

Material:

Stainless steel

3820.10. Quill holder for core tempering

Order No	d	d_7	d_8	d_5	b	l	l_1	l_2	l_3	l_4
3820.10.025.025	25	25	65	22	60	100	26	45	19	13
3820.10.030.030	30	30	70	27	65	105	31	50	22	14.5
3820.10.040.040	40	40	80	37	75	115	41	60	28	16.5

Mounting example

1. Swivelled
Slider without sealing surfaces

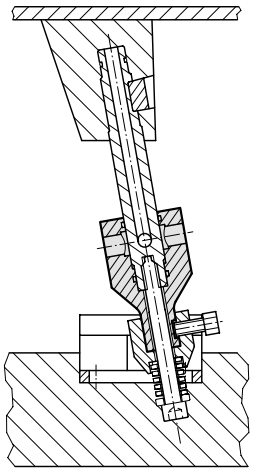

2. Swivelled
Slider with sealing surfaces

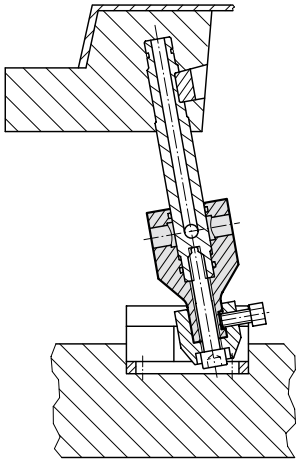

3. Not swivelled
Slider without sealing surfaces

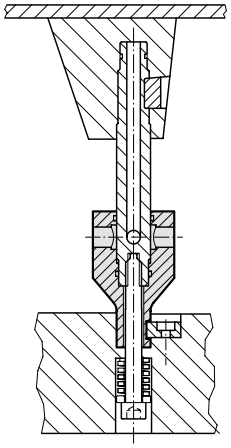

4. Not swivelled
Slider with sealing surfaces

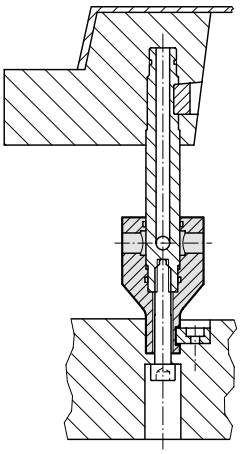

subject to alterations

O-ring, Viton

3800.01.01.01.

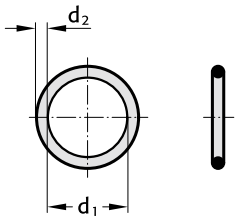



3800.01.01.01. O-ring, Viton

Order No		d_1	d_2	used in
3800.01.01.01.0240.30	1)	24	3	3820.10.025.025
3800.01.01.01.0210.30	2)	21	3	3820.10.025.025
3800.01.01.01.0292.30	1)	29.2	3	3820.10.030.030
3800.01.01.01.0260.30	2)	26	3	3820.10.030.030
3800.01.01.01.0392.30	1)	39.2	3	3820.10.040.040
3800.01.01.01.0360.30	2)	36	3	3820.10.040.040

Material:
Viton® (FPM)

Note:
Operating temperature -15°C to +200°C



Mould Line
Gas springs and Spring plungers for Mould making

FML Gas springs for Mould making

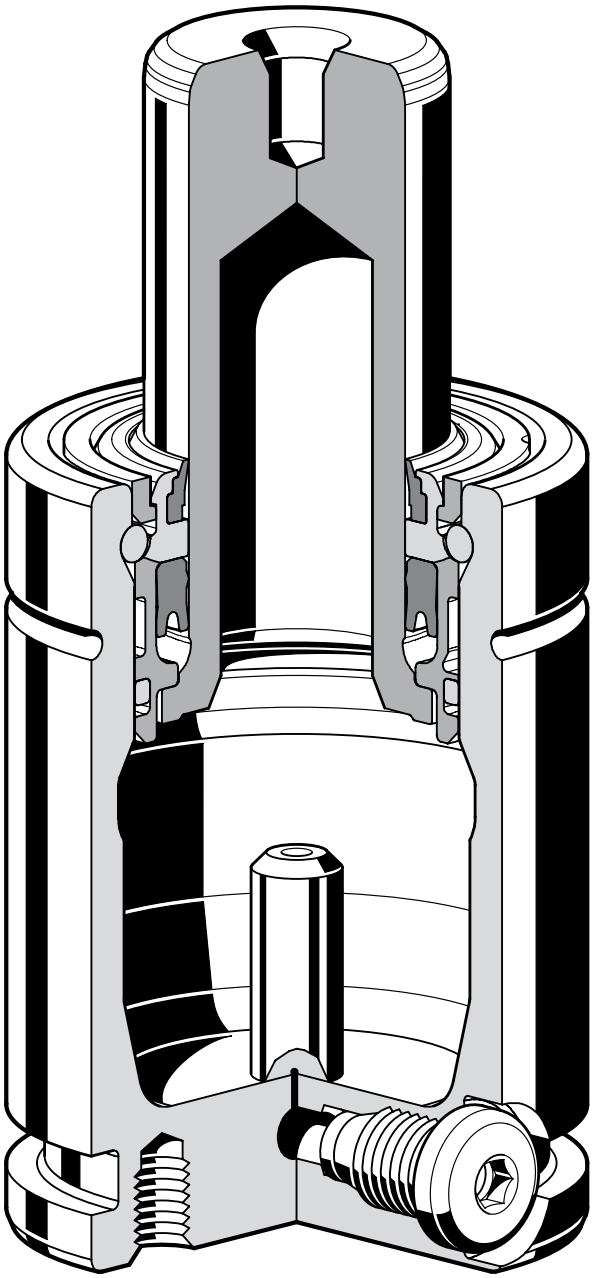

FML Gas springs for Mould Making

FIBRO Mould Line Gas springs (FML)

FIBRO FML Gas springs are an ideal supplement to and expansion of the traditional FIBRO product lines of helical, disc and elastomer springs for manufacturing tools, devices, moulds and machines.

Gas springs can be used for all applications where lift movements are required in parallel to mould opening.

FIBRO Mould Line Gas springs (FML), which were specially developed for mould making, are characterised by their high force, small size, long service life and a constant operating temperature of 120°C.

Of course, FIBRO FML Gas springs are approved as per European Pressure Equipment Directive 97/23/EC (14th GSGV ordinance on pressure vessels). FIBRO FML Gas springs are filled with nitrogen and do not require any pressure space that is positioned externally or in tool plates. They also require no gas supply lines.

In certain special cases, however, monitoring of charge pressure in the installed state is required. These may be found in the list of accessory products if needed. As long as all mounting details are laid out with due circumspection, it is no problem at all to remove and install FIBRO FML Gas springs.

Operating instructions are included with every delivery of FIBRO FML Gas springs. Application examples are shown on the following pages.

Functioning

The pressure medium is a commercially available, environment-friendly nitrogen. FIBRO FML Gas springs have a standard charge pressure of max. 150 bar.

Pressure Build-Up

In operation the piston rod enters the spring space whose volume is progressively reduced. The resulting pressure rise can be plotted on the Gas spring Diagram as a multiplication factor. The spring force is the product of initial force times that pressure-rise factor and can therefore be calculated easily.

Working temperature

The spring temperature should not exceed +120°C.

Charge pressure

Modification of charge pressure allows variation of the force rating and can be predetermined from the spring Diagram.

Installation

FIBRO FML Gas springs can be used in any installation position. Whether or not external forces act on them when at rest is of no consequence.and can therefore be calculated easily.

All FIBRO Gas springs meet the requirements of the Pressure Equipment Directive 97/23/EC.

The Pressure Equipment Directive (97/23/EC) has been ratified by the european parliament and the council of europe. The requirements of the pressure equipment directive came into force throughout the EC on 29 May 2002.

The directive defines pressure equipment as vessels, pipework, safety devices and pressure accessories. In terms of the directive a vessel is a casing which is designed and manufactured to contain fluids under pressure.

It follows from this definition that nitrogen gas springs of all sizes are deemed to be pressure vessels and must in this respect comply with the pressure equipment directive (97/23/EC) from 29 May 2002.

FML Gas springs for Mould making

Maintenance

FIBRO FML Gas springs are designed for long-term maintenance-free operation. We recommend lightly oiling the piston rod before using. Sealing and guide elements can be replaced easily in very little time.

They are available in a spare parts kit.

Each spare parts kit comes with detailed instructions for maintenance of Gas springs.

Caution!

Gas springs may only be charged with commercial grade 5.0 nitrogen gas.

Accessories

The range of accessories for gas springs includes fastening devices, charging and control units, screw connections and lines for setting up compound systems.

Advantages of the FIBRO Mould Line series:

- Very little calibration work required in the tool
- No lubrication required
- No maintenance required for up to 1,000,000 strokes[1]
- Variably adjustable forces
- For mould temperatures of up to 120°C
- Approved as per the european pressure equipment directive 97/23/EC (14th GSGV regulation for pressure vessels)
- Standard safety features (FIBRO Safer Choice)[2]
  Safety piston rod
  Excess pressure protection
  Overstroke protection
- A pressure monitoring system makes it possible to recognise an impending failure at an early point (prevention)
- No tool breakage if the 2nd separation level is locked (the plate comes to a standstill; after the jam is removed, production can be resumed)
- Used worldwide in one million FIBRO Gas springs
- Cost savings: approximately 60-70%
  (e.g. compared to a latch-locking unit)

[1] At 80°C to 120°C/ 500,000 strokes

[2] Depending on type of spring

Warning signs

These are available on request. The signs should be affixed near the springs in as prominent a position as possible.

WARNING
This tool is equipped with
__ Gas Springs with a max. pressure of
150 or 180 bar, depending on spring type.
Working pressure _____ bar.
Read maintenance instructions before working on gas springs.

FIBRO

Business Area Standard Parts
D-74851 Hassmersheim · Postfach 1120
T +49 (0) 6266-73-0* · **F** +49 (0) 6266-73-237

Size 35×50 mm

Language	Order No
german	2480.00.035.050.1
english	2480.00.035.050.2
french	2480.00.035.050.3
italian	2480.00.035.050.4
spanish	2480.00.035.050.5
polish	2480.00.035.050.PL
czech	2480.00.035.050.CZ
turkish	2480.00.035.050.TR
chinese	2480.00.035.050.CN

WARNING
This tool is equipped with ___ Gas Springs with a max. pressure of 150 or 180 bar, depending on spring type.

No. pcs.	spring type	fill.press./bar	force/daN
1 ___	_____	_____	_____
2 ___	_____	_____	_____
3 ___	_____	_____	_____
4 ___	_____	_____	_____
5 ___	_____	_____	_____

Read maintenance instructions **before** working on gas springs.

FIBRO

Business Area Standard Parts
D-74851 Hassmersheim · Postfach 1120
T +49 (0) 6266-73-0* · **F** +49 (0) 6266-73-237

Size 75×105 mm

Language	Order No
german	2480.00.075.105.1
english	2480.00.075.105.2
french	2480.00.075.105.3
italian	2480.00.075.105.4
spanish	2480.00.075.105.5
polish	2480.00.075.105.PL
czech	2480.00.075.105.CZ
turkish	2480.00.075.105.TR
chinese	2480.00.075.105.CN

Size 110×150 mm

Language	Order No
german	2480.00.110.150.1
english	2480.00.110.150.2
french	2480.00.110.150.3
italian	2480.00.110.150.4
spanish	2480.00.110.150.5
polish	2480.00.110.150.PL
czech	2480.00.110.150.CZ
turkish	2480.00.110.150.TR
chinese	2480.00.110.150.CN

subject to alterations

Mounting examples

Mounting possibilities for gas springs are listed below.
For additional information on mounting, see the corresponding pages in the catalogue.

OK

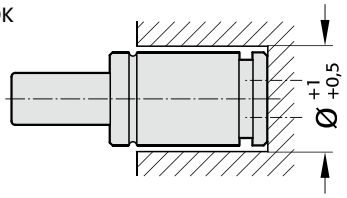

Screw mounted at the base

OK

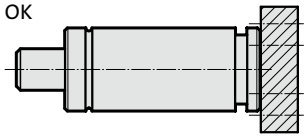

Screw mounted at the base with 2480.011.

OK

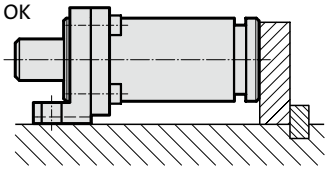

Fastened with 2480.044./045./047.

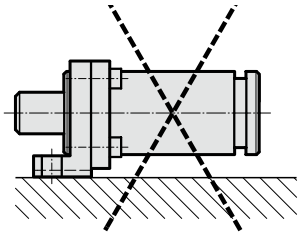

OK

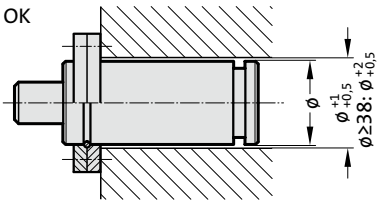

Fastened with 2480.055./057./064.

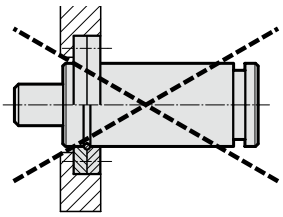

Installation principle:

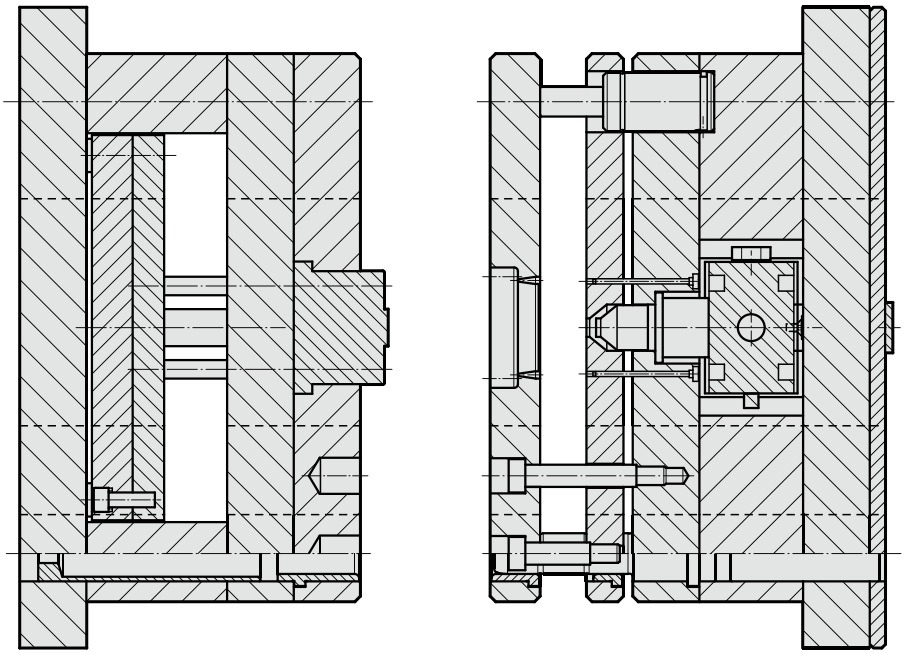

Mounting directions
FML Gas springs

To achieve the best possible service-life and safety from the gas spring, the directions below must be followed.

Mounting instructions

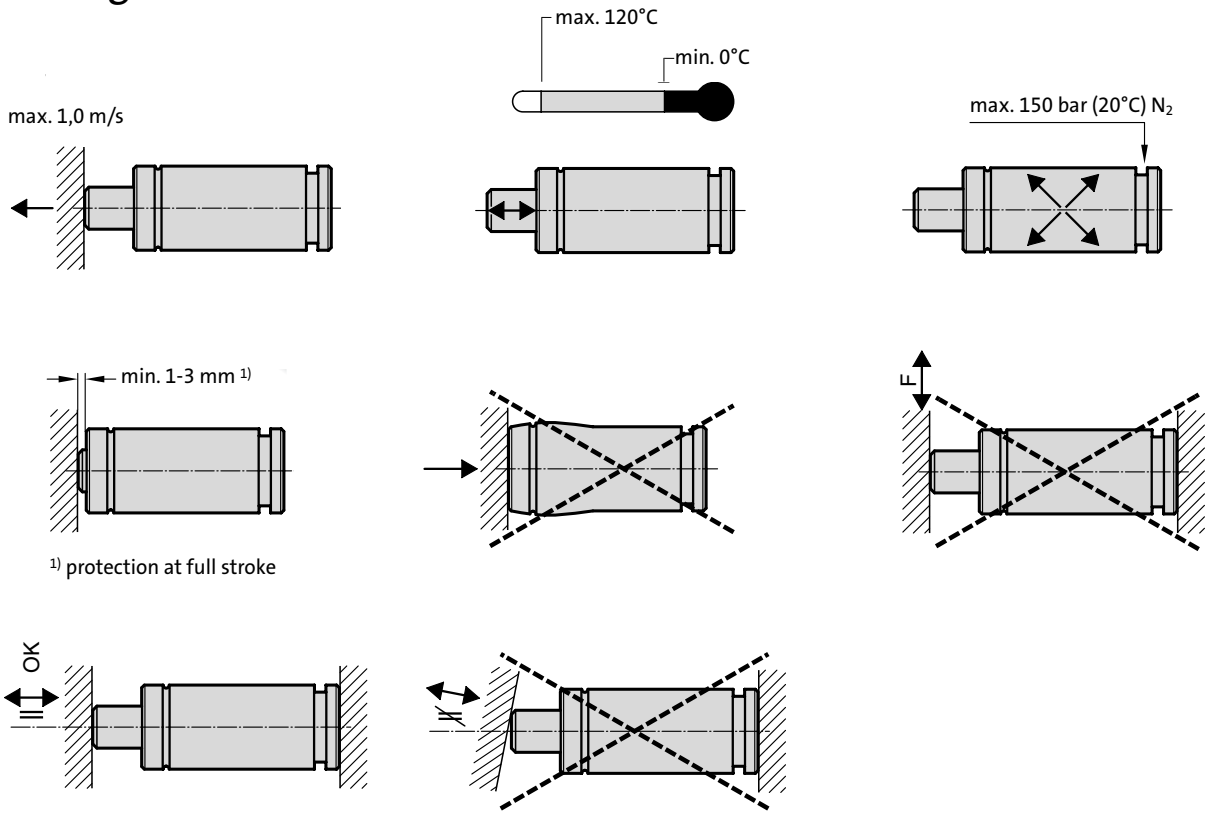

- Secure the gas spring to the tool/machine whenever possible, using the threaded hole(s) in the base of the gas spring or a suitable flange. Never exceed the maximum torque values for the threads in the base of the gas spring: (M6 = 10 Nm; M8 = 24 Nm; M10 = 45 Nm; M12 = 80 Nm)
- The threaded hole in the piston rod top should not be used for mounting purposes. It is only to be used when carrying and servicing the gas spring.
- Do not use the gas spring in such a way that the piston rod is realised freely from its compressed position, as this could cause internal damage to the gas spring.
- Make sure the gas spring is mounted parallel to the direction of the compression stroke.
- Ensure the contact surface of the piston rod top is perpendicular to the direction of the compression stroke and is sufficiently hardened.
- The gas spring should not be subjected to the side loads.
- Protect the piston rod against mechanical damage and contact with fluids.
- We do not recommend the last 5 mm or 10% of the nominal stroke be utilised.
- The maximum charging pressure as a function of the working temperature must not be exceeded as it may effect the safety of the product.
- Exceeding the gas spring's recommended operating temperature will shorten the service-life of the gas spring.
- The entire contact surface of the piston rod / piston should be used.

FIBRO

Gas springs – The Safer Choice

PDF DOWNLOAD

FIBRO - The Safer Choice

At FIBRO, safety and reliability are paramount. Particularly when it comes to our gas springs. With their unique range of safety features, FIBRO gas springs are the safest on the market.

FIBRO safety features[1)]



PED approval for 2 million strokes

FIBRO gas springs are developed, manufactured and tested for 2 million full strokes* in accordance with DGRL97/23/EG. The springs deliver this full performance at the maximum permissible limits in terms of filling pressure and operating temperature - even when combined with any of the various mounting types available.

* Unless specified otherwise on the spring

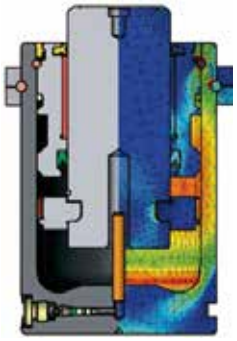

The benefit for you:

► **Guaranteed safety and reliability for the entire service life of the spring**

Repair kits and qualified training sessions available through FIBRO Service offer increased effectiveness and process reliability.

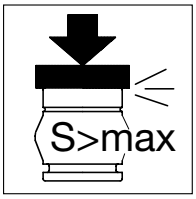

Overstroke protection

Conventional gas springs can burst in the event of an over-extended stroke. If this happens, parts flying around can become dangerous projectiles.

FIBRO gas springs are different: in the event of an overstroke and depending on the spring type the patented protection system will ensure that either the cylinder wall of the gas spring is deformed in a predefined manner (A) or the piston rod destroys a rupture bolt in the floor of the cylinder (B), thereby allowing the gas to escape into the atmosphere.

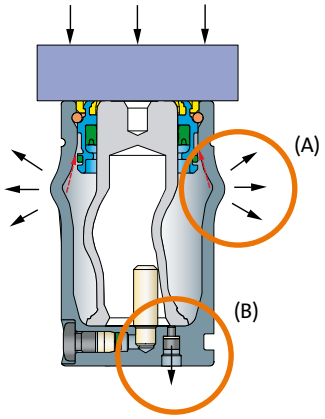

The benefit for you:

► **No risk of parts flying around in the event of an overstroke**

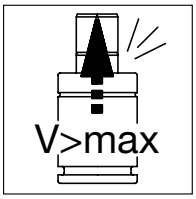

Return stroke protection

A particularly dangerous situation can arise with conventional gas springs if tool components become jammed and the pressure on the compressed piston rod is then abruptly released: in this case, the piston rod is then fired out of the cylinder like a missile.
FIBRO gas springs are different: special guides and a patented safety stop in the piston rods ensure your safety. If the speed is too high during the return stroke, the collar on the piston rod will automatically break. The integrated safety stop then destroys the seal, which allows the gas to escape into the atmosphere and the gas spring to become depressurised.

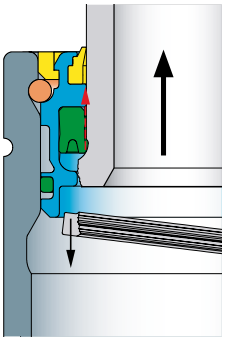

The benefit for you:

► **No risk of a piston rod firing out if the return stroke is too fast**

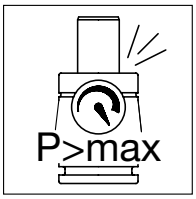

Overpressure protection

Conventional gas springs can burst if the internal pressure rises above a maximum permitted value. If this happens, parts flying around can become dangerous projectiles.

FIBRO gas springs are different: if the pressure rises above the maximum permitted value, the safety collar on the sealing set is automatically destroyed. The gas then escapes into the atmosphere and the gas spring is depressurised.

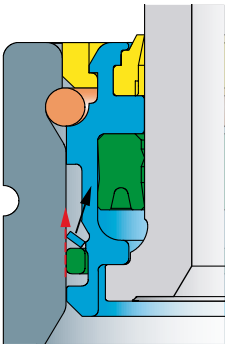

The benefit for you:

► **No risk of bursting parts in the event of overpressure**

[1)] Not all the safety features mentioned here have been implemented on all FIBRO gas springs.
Please refer to the relevant data sheets to check the current safety equipment which is provided with the gas spring you are interested in, or contact FIBRO GmbH directly for more information.

Gas springs – The Safer Choice

FIBRO reliability features



Flexible guides: The Flex Guide™ System

The Flex Guide™ System is a flexible guide in the gas spring which absorbs lateral movements of the piston rod. It minimises friction and lowers the operating temperature.

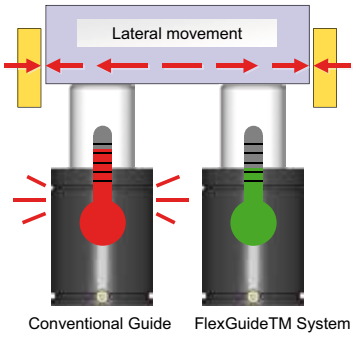

The benefits for you:

- **Extended service life**
- **Increased stroke frequency, i.e. more strokes per minute**

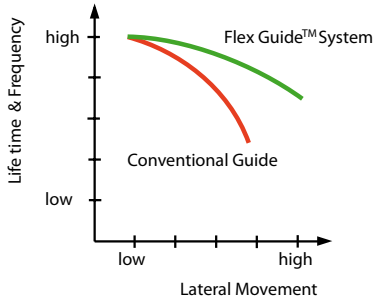

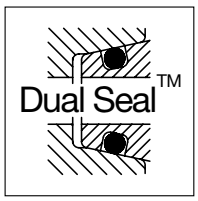

Safe hose connections: The Dual Seal™ System

The FIBRO Dual Seal™ System combines a metal seal with a soft elastomer seal. On hose connection systems, the system provides two leak-tight connections and prevents rotation.

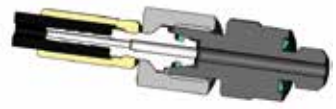

The benefits for you:

- **Leak-tight connection, even under vibrations**
- **High process reliability**
- **Minimised tool down time**
- **Simple installation thanks to anti-rotation function**



Wireless monitoring: The Wireless Pressure Monitoring (WPM) System

The optional Wireless Pressure Monitoring System (WPM) (patent pending) wirelessly monitors the pressure and temperature of FIBRO gas springs. Before a defective part is produced, the press operator receives a message from the WPM and can take appropriate action.

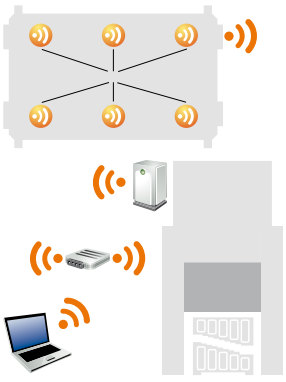

The benefits for you:

- **Preventative quality assurance**
- **High process reliability**
- **Minimised tool down time**
- **Reduced maintenance and costs**

Potential faults are individually displayed. As a result, service intervals can be extended.
Maintenance and repair costs are reduced.

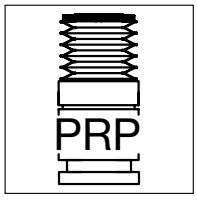

Protected piston rods: FIBRO Concertina Shrouds

The FIBRO Piston Rod Protection (patented) reliably protects the piston rods in gas springs against dirt, oil and emulsion. In this way, the system prevents damage to the piston rod surface and leaks at internal seals.

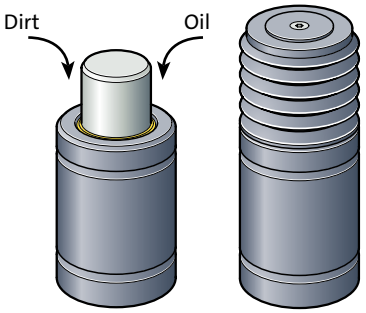

The benefits for you:

- **Significantly longer service life for gas springs under harsh operating conditions**

Gas spring (Spring plunger) MOULD LINE, with hexagon socket



3479.030.

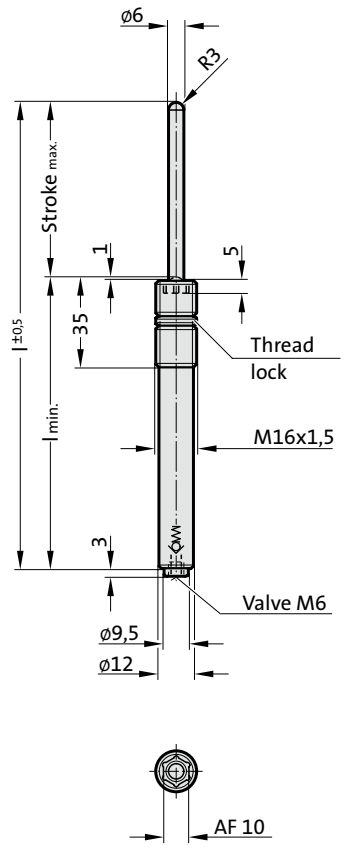

Description:

Spring plungers are used as ejectors, damper pins, fixing and retaining pins in many sectors of the tool-, jig- and fixture-making industries. Assembly requires the use of special FIBRO insertion tool (2470.12.010.017).

Note:

Worn gas springs cannot be repaired, they have to be replaced completely.

Pressure medium: Nitrogen - N_2
Max. filling pressure depends on working temperature:
150 bar (20°C) at 0°C-80°C
125 bar (20°C) at 80°C-100°C
115 bar (20°C) at 100°C-120°C
Min. filling pressure: 25 bar (20°C)
Working temperature: 0°C to +120°C
Temperature related force increase: ± 0.3%/°C
Max. recommended extensions per minute:
20 (at 0°C-80°C)
15 (at 80°C-100°C)
10 (at 100°C-120°C)
Max. piston speed: 1.0 m/s

2) Hexagon nut order supplementary: 2480.004.00040.1 (M16 x 1,5)

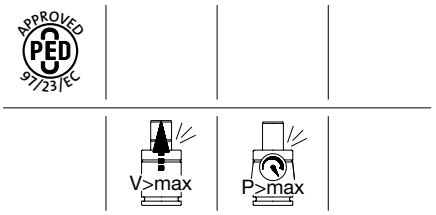

3479.030.

Gas spring (Spring plunger) MOULD LINE, with hexagon socket

Order No	Stroke$_{max.}$	l$_{min.}$	l
3479.030.00040.010	10	55	65
3479.030.00040.020	20	65	85
3479.030.00040.030	30	75	105
3479.030.00040.040	40	85	125
3479.030.00040.050	50	95	145
3479.030.00040.060	60	105	165
3479.030.00040.070	70	115	185
3479.030.00040.080	80	125	205

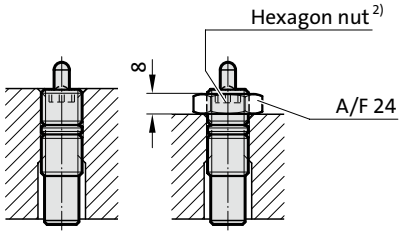

Initial spring force versus charge pressure

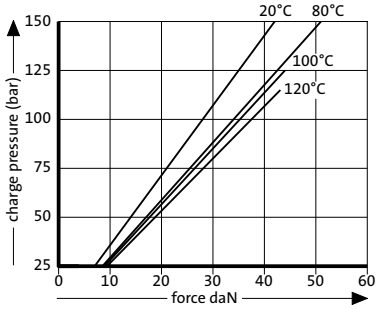

Spring force Diagram displacement versus stroke rise

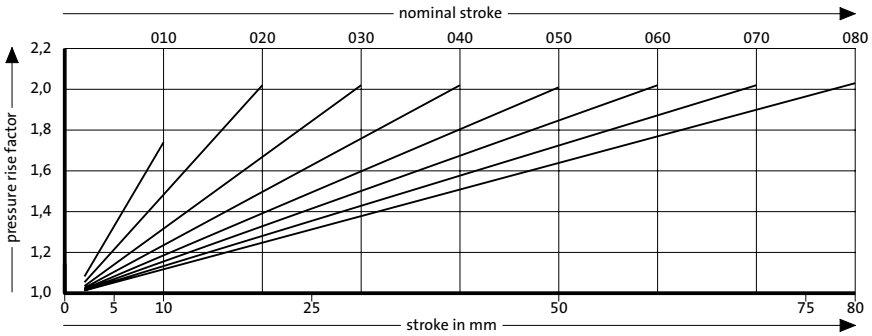

Pressure rise factor accounts for displacement but not external influences!

Gas spring (Spring plunger) MOULD LINE, with hexagon socket

Description:

Spring plungers are used as ejectors, damper pins, fixing and retaining pins in many sectors of the tool-, jig- and fixture-making industries. Assembly requires the use of special FIBRO insertion tool (2470.12.010.017).

Note:

Worn gas springs cannot be repaired, they have to be replaced completely.

Pressure medium: Nitrogen - N_2
Max. filling pressure depends on working temperature:
150 bar (20°C) at 0°C-80°C
125 bar (20°C) at 80°C-100°C
115 bar (20°C) at 100°C-120°C
Min. filling pressure: 25 bar (20°C)
Working temperature: 0°C to +120°C
Temperature related force increase: ± 0.3%/°C
Max. recommended extensions per minute:
20 (at 0°C-80°C)
15 (at 80°C-100°C)
10 (at 100°C-120°C)
Max. piston speed: 1.0 m/s

2) Hexagon nut order supplementary:
2480.004.00170

3479.032.

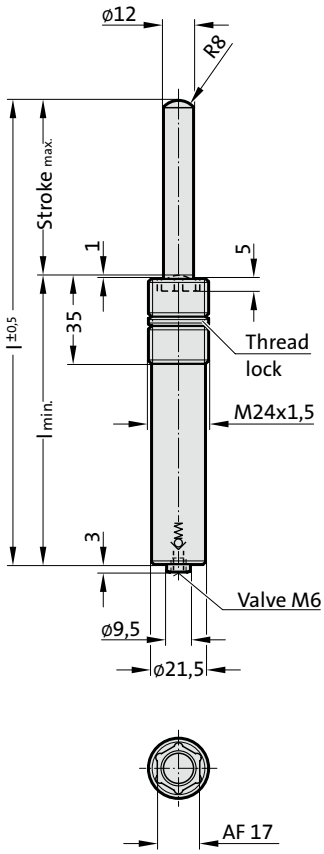



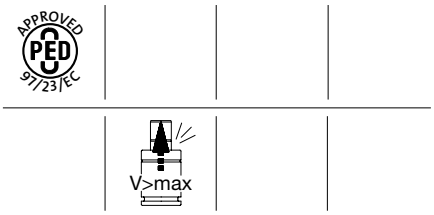

3479.032.

Gas spring (Spring plunger) MOULD LINE, with hexagon socket

Order No	Stroke$_{max.}$	l$_{min.}$	l
3479.032.00170.010	10	55	65
3479.032.00170.020	20	65	85
3479.032.00170.030	30	75	105
3479.032.00170.040	40	85	125
3479.032.00170.050	50	95	145
3479.032.00170.060	60	105	165
3479.032.00170.070	70	115	185
3479.032.00170.080	80	125	205

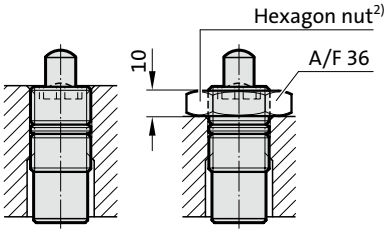

Initial spring force versus charge pressure

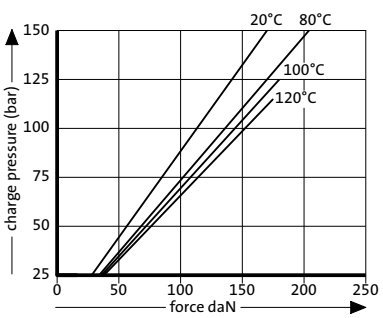

Spring force Diagram displacement versus stroke rise

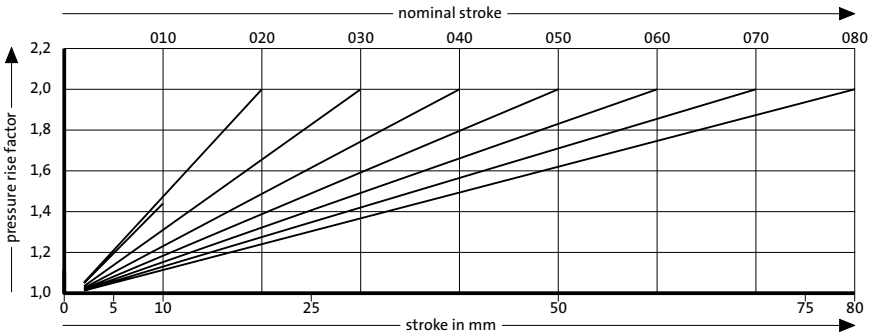

Pressure rise factor accounts for displacement but not external influences!

Gas spring Mould Line
Mounting variations

2480.055.00150

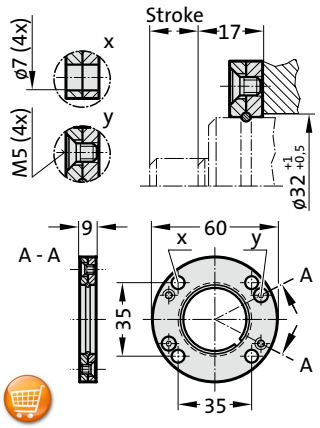

2480.057.00150

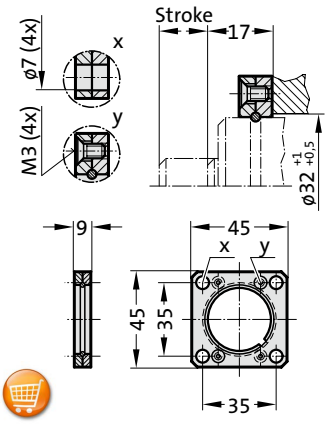

2480.044.03.00150 [2)]

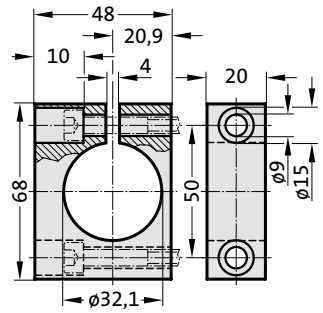

2480.044.00150 [2)]

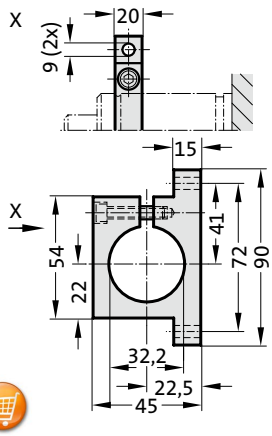

Note:

[2)] Caution:
Spring force must be absorbed by stop surface!

Mounting example:

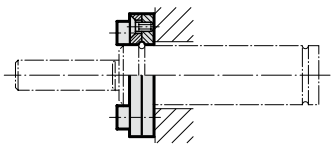

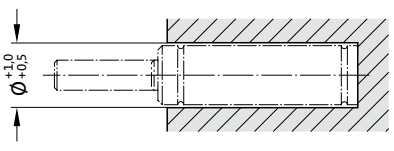

subject to alterations

Gas spring MOULD LINE

Note:

Initial spring force at 150 bar/20°C is 300 daN

Order No. for spare parts kit: 3487.12.00300

Pressure medium: Nitrogen - N_2
Max. filling pressure depends on working temperature:
150 bar (20°C) at 0°C-80°C
125 bar (20°C) at 80°C-100°C
115 bar (20°C) at 100°C-120°C
Min. filling pressure: 25 bar (20°C)
Working temperature: 0°C to +120°C
Temperature related force increase: ± 0.3%/°C
Max. recommended extensions per minute:
20 (at 0°C-80°C)
15 (at 80°C-100°C)
10 (at 100°C-120°C)
Max. piston speed: 1.0 m/s

3487.12.00300.

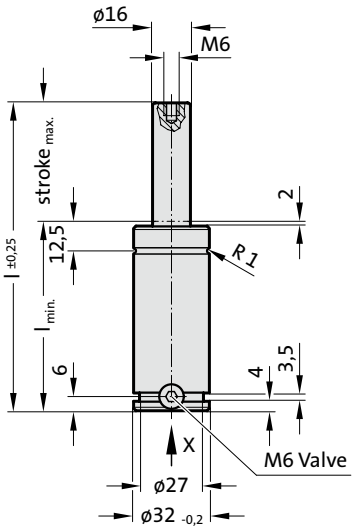

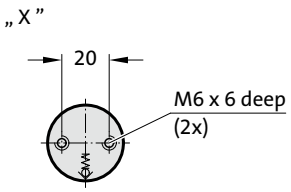



APPROVED PED 97/23/EC

S>max V>max P>max

3487.12.00300.
Gas spring MOULD LINE

Order No*	Stroke$_{max.}$	$l_{min.}$	l
3487.12.00300.010	10	40	50
3487.12.00300.013	13	43	56
3487.12.00300.016	16	46	62
3487.12.00300.019	19	49	68
3487.12.00300.025	25	55	80
3487.12.00300.032	32	62	94
3487.12.00300.038	38	68	106
3487.12.00300.050	50	80	130
3487.12.00300.063	63	93	156
3487.12.00300.075	75	105	180
3487.12.00300.080	80	110	190
3487.12.00300.100	100	130	230
3487.12.00300.125	125	155	280

*Stroke lengths 100 and 125 only by request!

Initial spring force
versus charge pressure

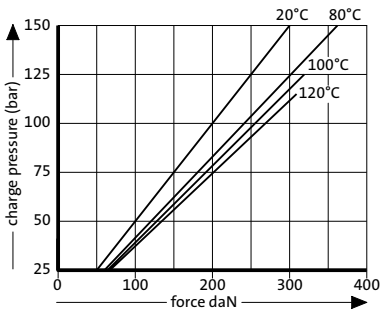

Spring force Diagram displacement versus stroke rise

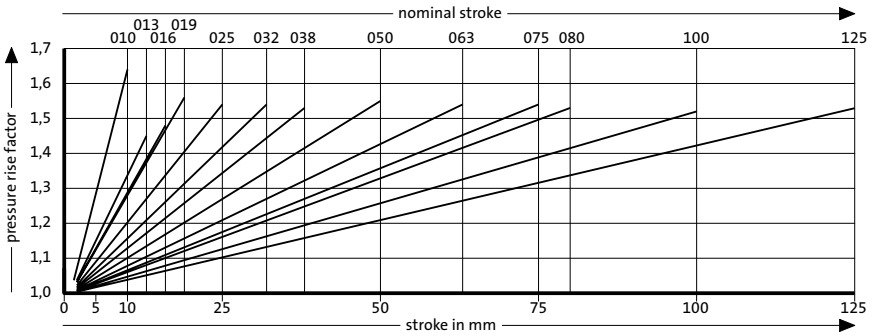

Pressure rise factor accounts for displacement but not external influences!

Gas spring Mould Line
Mounting variations

2480.055.00250

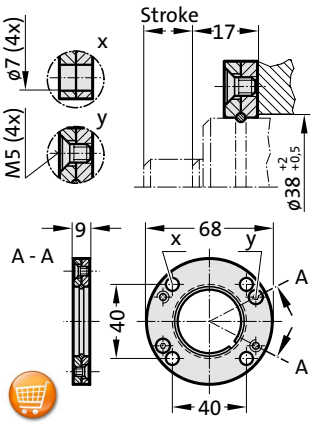

2480.057.00250

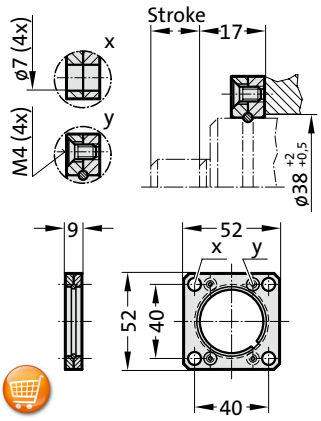

2480.044.03.00250 [2)]

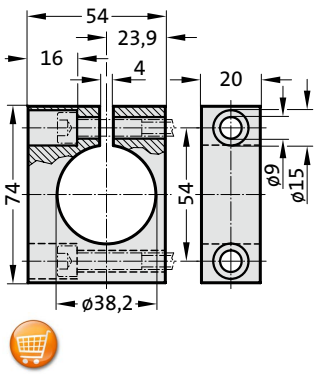

2480.044.00250 [2)]

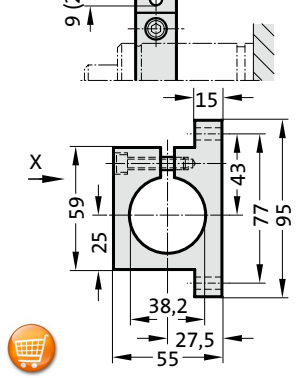

Note:

[2)] Caution:
Spring force must be absorbed by stop surface!

subject to alterations

Gas spring MOULD LINE

Note:

Initial spring force at 150 bar/20°C is 500 daN

Order No. for spare parts kit: 3487.12.00500

Pressure medium: Nitrogen - N_2
Max. filling pressure depends on working temperature:
150 bar (20°C) at 0°C-80°C
125 bar (20°C) at 80°C-100°C
115 bar (20°C) at 100°C-120°C
Min. filling pressure: 25 bar (20°C)
Working temperature: 0°C to +120°C
Temperature related force increase: ± 0.3%/°C
Max. recommended extensions per minute:
20 (at 0°C-80°C)
15 (at 80°C-100°C)
10 (at 100°C-120°C)
Max. piston speed: 1.0 m/s

3487.12.00500.

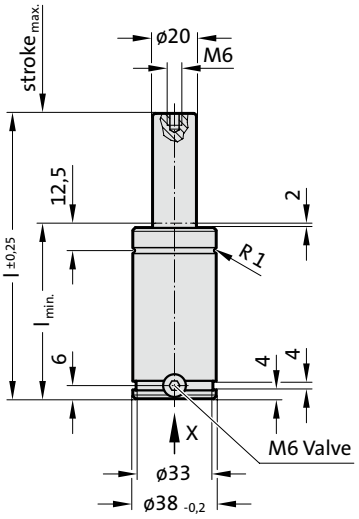

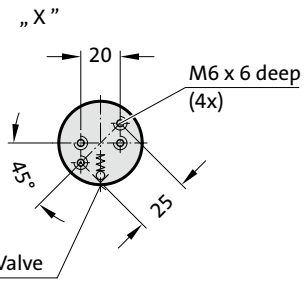



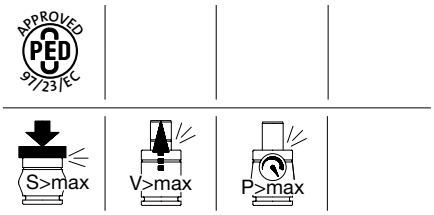

3487.12.00500.
Gas spring MOULD LINE

Order No*	Stroke$_{max.}$	l$_{min.}$	l
3487.12.00500.010	10	40	50
3487.12.00500.013	13	43	56
3487.12.00500.016	16	46	62
3487.12.00500.019	19	49	68
3487.12.00500.025	25	55	80
3487.12.00500.032	32	62	94
3487.12.00500.038	38	68	106
3487.12.00500.050	50	80	130
3487.12.00500.063	63	93	156
3487.12.00500.075	75	105	180
3487.12.00500.080	80	110	190
3487.12.00500.100	100	130	230
3487.12.00500.125	125	155	280

*Stroke lengths 100 and 125 only by request!

Initial spring force
versus charge pressure

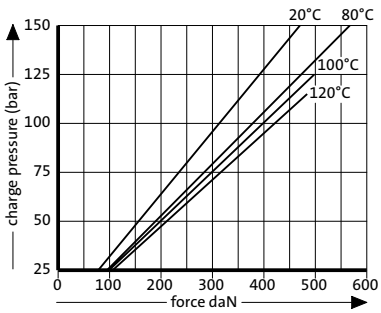

Spring force Diagram displacement versus stroke rise

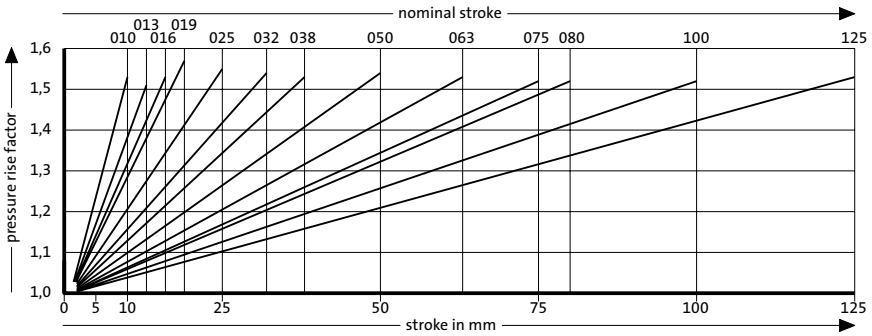

Pressure rise factor accounts for displacement but not external influences!

FIBRO

Gas spring Mould Line
Mounting variations

2480.011.00500

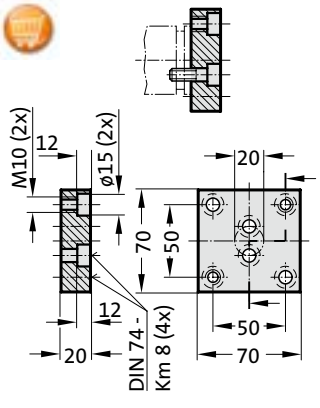

2480.011.00500.1

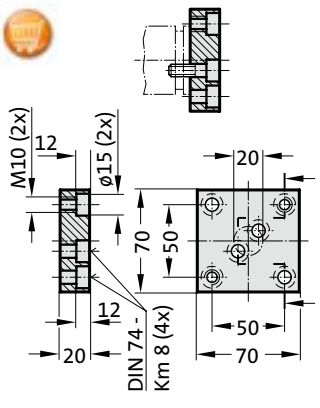

2480.011.00500.2

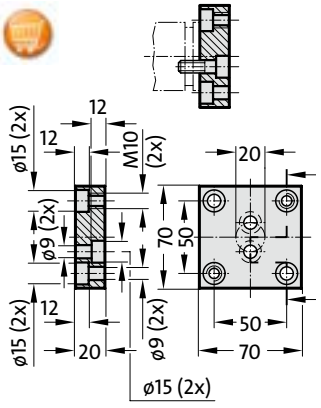

2480.055.00500

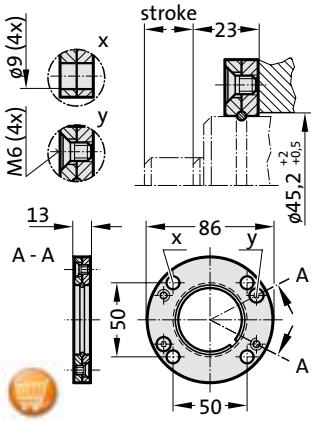

2480.057.00500

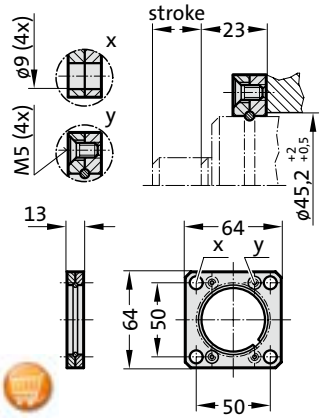

2480.044.03.00500 [2]

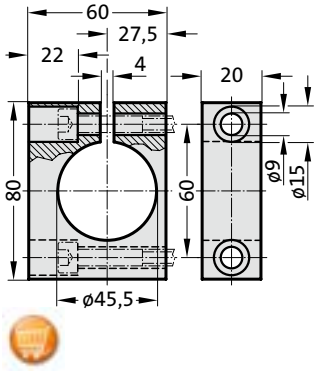

2480.044.00500 [2]

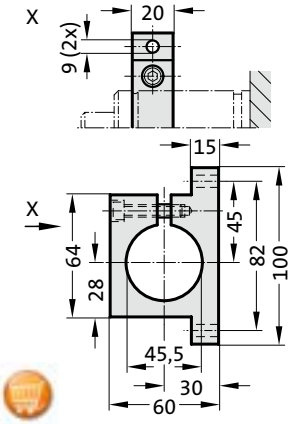

2480.064.00500 [4]

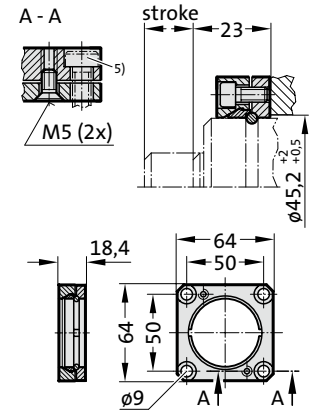

Note:

[2] Attention:
The spring force must be absorbed by the stop surface!

[4] Square collar flange, non-rotating, fixing for composite connection.

[5] Machine screws with hexagonal socket (compact head recommended)

Gas spring MOULD LINE

Note:

Initial spring force at 150 bar/20°C is 750 daN

Order No. for spare parts kit: 3487.12.00750

Pressure medium: Nitrogen - N_2
Max. filling pressure depends on working temperature:
150 bar (20°C) at 0°C-80°C
125 bar (20°C) at 80°C-100°C
115 bar (20°C) at 100°C-120°C
Min. filling pressure: 25 bar (20°C)
Working temperature: 0°C to +120°C
Temperature related force increase: ± 0.3%/°C
Max. recommended extensions per minute:
20 (at 0°C-80°C)
15 (at 80°C-100°C)
10 (at 100°C-120°C)
Max. piston speed: 1.0 m/s

3487.12.00750.

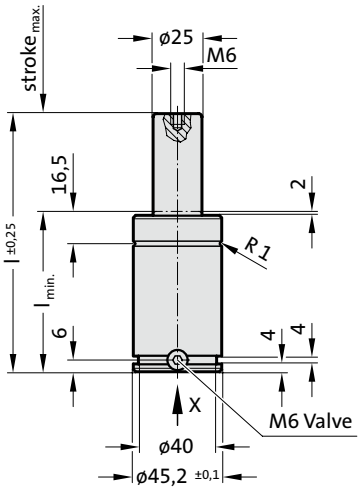

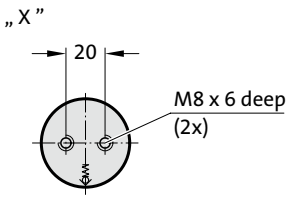



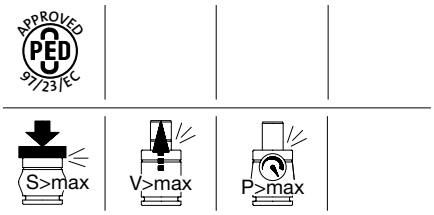

3487.12.00750.
Gas spring MOULD LINE

Order No*	Stroke max.	l min.	l
3487.12.00750.010	10	42	52
3487.12.00750.013	13	45	58
3487.12.00750.016	16	48	64
3487.12.00750.019	19	51	70
3487.12.00750.025	25	57	82
3487.12.00750.032	32	64	96
3487.12.00750.038	38	70	108
3487.12.00750.050	50	82	132
3487.12.00750.063	63	95	158
3487.12.00750.075	75	107	182
3487.12.00750.080	80	112	192
3487.12.00750.100	100	132	232
3487.12.00750.125	125	157	282

*Stroke lengths 100 and 125 only by request!

Initial spring force
versus charge pressure

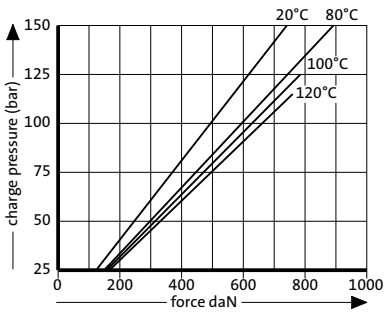

Spring force Diagram displacement versus stroke rise

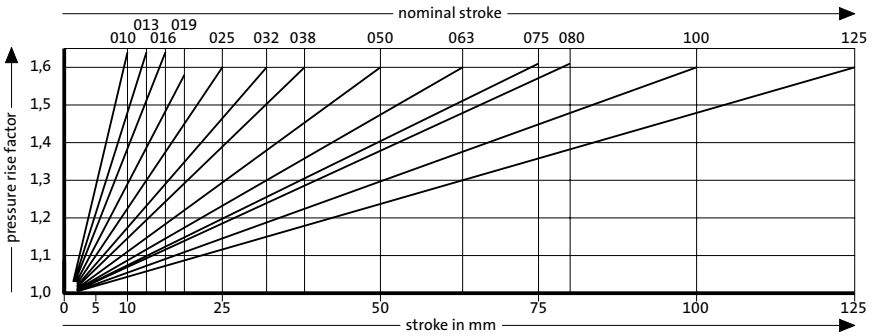

Pressure rise factor accounts for displacement but not external influences!

FIBRO

Gas spring Mould Line
Mounting variations

2480.011.00750

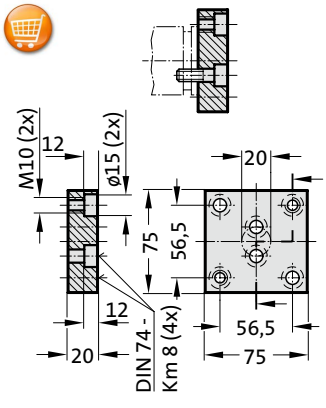

2480.011.00750.1

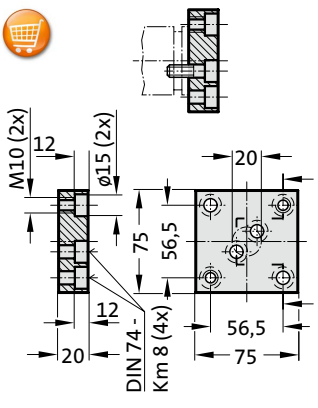

2480.011.00750.3

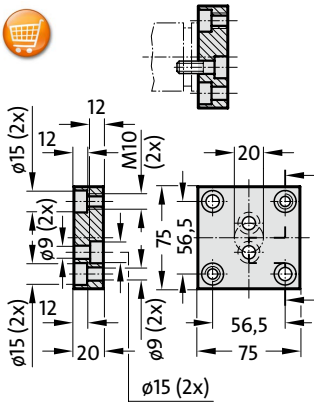

2480.055.00750

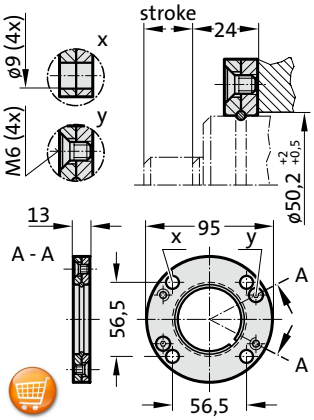

2480.057.00750

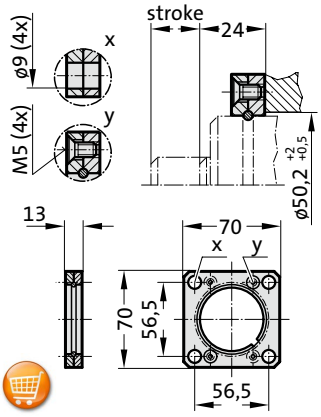

2480.064.00750 4)

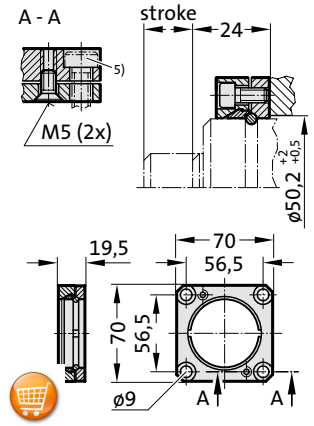

2480.044.00750 2)

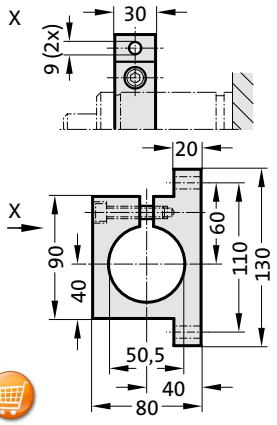

2480.045.00750 2)

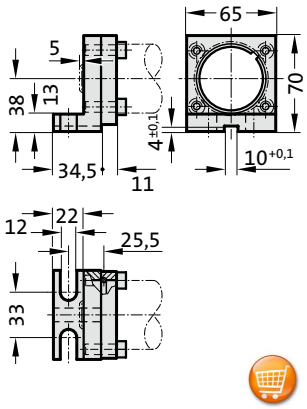

2480.047.00750 2)

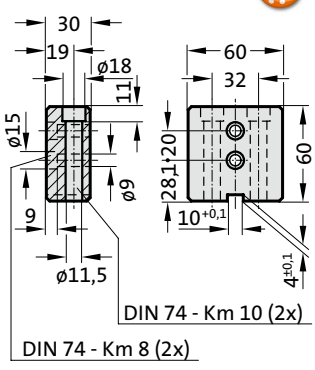

2480.044.03.00750 2)

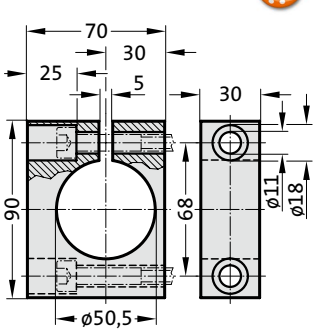

Note:

2) Attention:
The spring force must be absorbed by the stop surface!

4) Square collar flange, non-rotating, fixing for composite connection.

5) Machine screws with hexagonal socket (compact head recommended)

6) Installation height increased from 22 mm to 24 mm, installation position from 3 mm to 5 mm according to VDI 3003.

subject to alterations

Gas spring MOULD LINE

Note:

Initial spring force at 150 bar/20°C is 1000 daN

Order No. for spare parts kit: 3487.12.01000

Pressure medium: Nitrogen - N_2
Max. filling pressure depends on working temperature:
150 bar (20°C) at 0°C-80°C
125 bar (20°C) at 80°C-100°C
115 bar (20°C) at 100°C-120°C
Min. filling pressure: 25 bar (20°C)
Working temperature: 0°C to +120°C
Temperature related force increase: ± 0.3%/°C
Max. recommended extensions per minute:
20 (at 0°C-80°C)
15 (at 80°C-100°C)
10 (at 100°C-120°C)
Max. piston speed: 1.0 m/s

3487.12.01000.

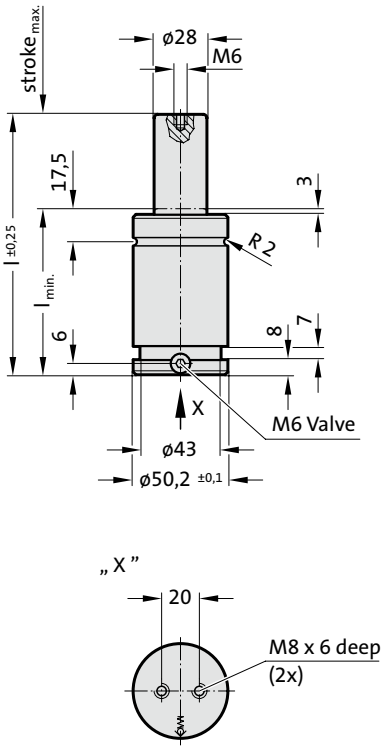



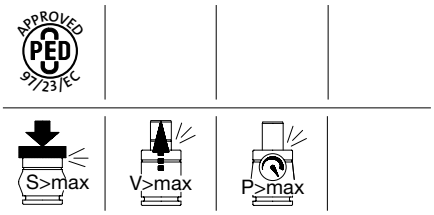

3487.12.01000.
Gas spring MOULD LINE

Order No*	Stroke max.	l min.	l
3487.12.01000.013	13	51	64
3487.12.01000.016	16	54	70
3487.12.01000.019	19	57	76
3487.12.01000.025	25	63	88
3487.12.01000.032	32	70	102
3487.12.01000.038	38	76	114
3487.12.01000.050	50	88	138
3487.12.01000.063	63	101	164
3487.12.01000.075	75	113	188
3487.12.01000.080	80	118	198
3487.12.01000.100	100	138	238
3487.12.01000.125	125	163	288

*Stroke lengths 100 and 125 only by request!

Initial spring force
versus charge pressure

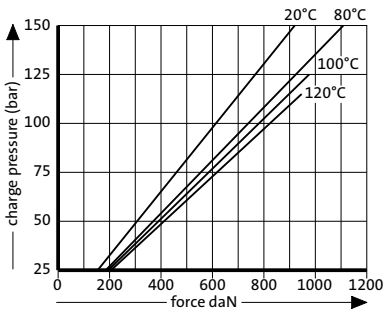

Spring force Diagram displacement versus stroke rise

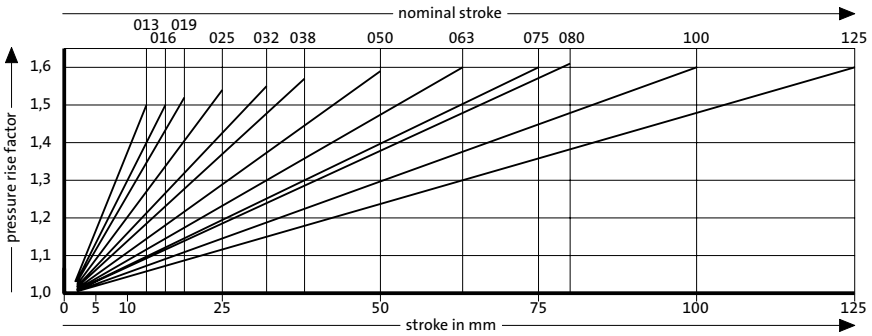

Pressure rise factor accounts for displacement but not external influences!



Gas spring accessories

see registry F:
Gas spring accessories



Auxiliary equipment

see registry H: Chemical tooling aids
see registry J: Peripheral equipment

FIBRO

Business Area Standard Parts

FIBRO GmbH DE
August-Läpple-Weg
74855 Hassmersheim
T +49 6266 73-0
F +49 6266 73 237
info@fibro.de

FIBRO France Sarl FR
26, avenue de l'Europe
67300 Schiltigheim
T +33 390 204040
F +33 388 810829
info@fibro.fr

FIBRO Inc. US
139 Harrison Avenue
Rockford, IL 61104
T +1 815 2 29 13 00
F +1 815 2 29 13 03
info@fibroinc.com

FIBRO Asia Pte. Ltd. SG
9, Changi South Street 3
#07-04
Singapore 486361
T +65 65 439963
F +65 65 439962
info@fibro-asia.com

FIBRO INDIA IN
STANDARD PARTS PVT. LTD.
Plot No: A-55, Phase II,
Chakan Midc,Taluka Khed,
Pune - 410 501
T +91 2135 338800
F +91 2135 338888
info@fibro-india.com

FIBRO (SHANGHAI) CN
STANDARD PARTS CO., LTD.
2F, Building No. 30
No. 188 Hedan Road
Shanghai 200131
T +86 21 60831598
F +86 21 60831599
info@fibro-china.com

FIBRO KOREA CO. LTD. KR
Namdongsanggong Bd. 401ho
632-1, Gojan-Dong, Namdong-Gu
Incheon, 405-817
T +82 32 8210131
F +82 32 8210030
fibro@chol.com

www.fibro.com

Representative

01/2014 © Copyright by FIBRO GmbH
Printed in Germany on paper bleached without chlorine

Order No. 2.1500.08.0114.01000